Model 425B/440/455
Semitrailer
Parts Manual

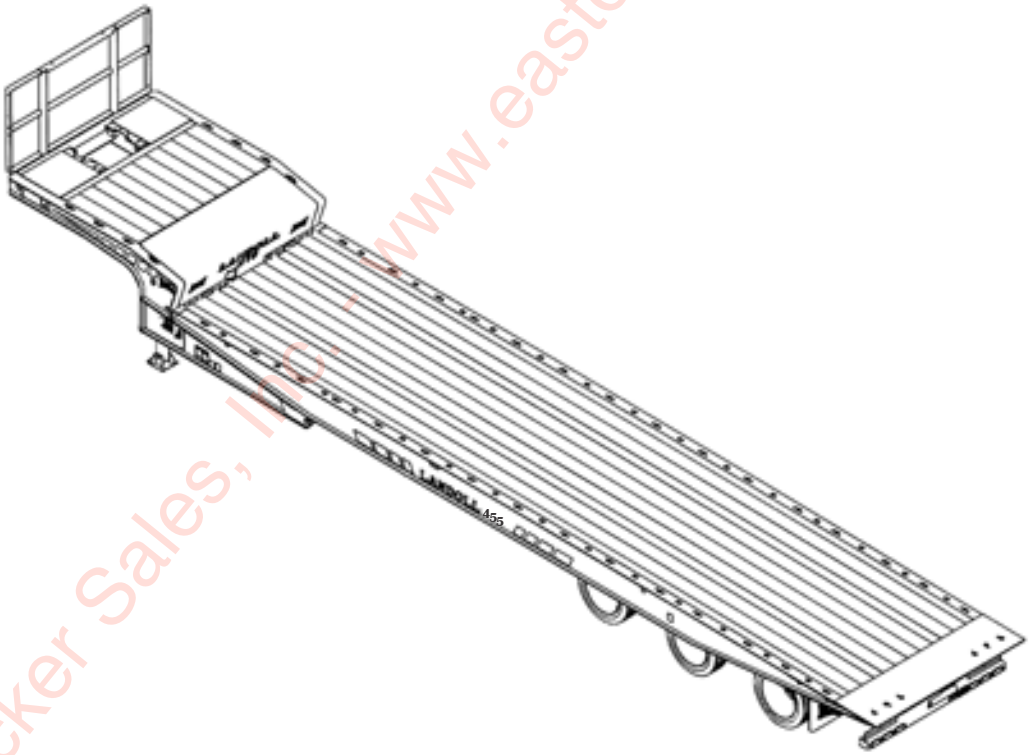

LANDOLL CORPORATION
1900 North Street
Marysville, Kansas 66508
(785) 562-5381
800-428-5655 ~ WWW.LANDOLL.COM

Eastern Wrecker Sales, Inc. - www.easternwrecker.com - 919-553-4038

Eastern Wrecker Sales, Inc. - www.easternwrecker.com - 919-553-4038

Table of Contents

1 Instructions for Ordering Parts

2 Illustrated Parts List

GENERAL ASSEMBLY 2-1
DECAL INSTALLATION 2-5
UPPER DECK ASSEMBLY 2-8
HYDRAULIC ELECTRICAL AIR GENERAL ASSEMBLY (425 & 440) 2-11
HYDRAULIC ELECTRICAL AIR GENERAL ASSEMBLY (455) 2-13
HYDRAULIC ASSEMBLY (425 & 440) 2-15
HYDRAULIC ASSEMBLY (455) 2-17
AIR/HYDRAULIC CONNECTORS ASSEMBLY (FLOW CONTROL) 2-19
THREE SPOOL VALVE ASSEMBLY 2-21
THREE STACK VALVE 2-23
U/C CYLINDER ASSEMBLY 2-25
CYLINDER, HYDRAULIC 4 X 100 PORTED ROD (STREETSIDE) (455-48/50CA, 425-41/45, 440-41) 2-26
CYLINDER, HYDRAULIC 4 X 100 (CURBSIDE) (425-41, 440-41) 2-27
CYLINDER, HYDRAULIC 4 X 126 PORTED ROD (STREETSIDE) (455-50/53/55HD, 440-48/50CA) 2-28
CYLINDER, HYDRAULIC 4 X 126 (CURBSIDE) (455-50/53/55HD, 455-48/50CA, 425-45, 440-48) 2-29
CYLINDER, HYDRAULIC 4 X 138 PORTED ROD (STREETSIDE) (440-53) 2-30
CYLINDER, HYDRAULIC 4 X 138 (CURBSIDE) (440-50CA/53) 2-31
CYLINDER 4-1/2 X 30 (425) 2-32
CYLINDER 6" X 41" (440 & 455) 2-33
30 GALLON HYDRAULIC WET KIT (OPTION) 2-35
35 GALLON ALUMINUM HYDRAULIC WET KIT (OPTION) 2-37
ELECTRICAL SYSTEM 2-39
AIR SYSTEM, ABS 2-41
VALVE ASSEMBLY, AIR BOOSTER 2-43

Eastern Wrecker Sales, Inc. - www.easternwrecker.com - 919-553-4038

VALVE ASSEMBLY, AIR BOOSTER (ARCTIC) 2-45
SUSPENSION ASSEMBLY, GENERAL ITEMS (TANDEM) 2-48
SUSPENSION ASSEMBLY, GREASE ITEMS (TANDEM) 2-51
SUSPENSION ASSEMBLY, TIRE INFLATION SYSTEM (TANDEM) 2-53
SUSPENSION ASSEMBLY, GENERAL ITEMS (TRIPLE) 2-56
SUSPENSION ASSEMBLY, GREASE ITEMS (TRIPLE) 2-59
SUSPENSION ASSEMBLY, TIRE INFLATION SYSTEM (TRIPLE) 2-61
TIRE INFLATION SYSTEM (OPTION) 2-63
HARNESS KIT, TIRE INFLATION SYSTEM (OPTION) 2-65
SPRING AIR BRAKE SYSTEM W/ ABS (TANDEM) 2-67
SPRING AIR BRAKE SYSTEM W/ ABS (TANDEM) 2-69
SPRING AIR BRAKE SYSTEM W/ ABS (TRIPLE) 2-71
SPRING AIR BRAKE SYSTEM W/ ABS (NARROW TRIPLE) 2-73
SPRING AIR BRAKE SYSTEM W/ ABS ARCTIC (TRIPLE) 2-75
ABS BRAKE KIT 2-77
AIR RIDE SUSPENSION AIR SYSTEM (TANDEM) 2-79
AIR RIDE SUSPENSION AIR SYSTEM (TRIPLE) 2-81
AIR RIDE SUSPENSION AIR SYSTEM ARCTIC (TRIPLE) 2-83
AIR CONTROL KIT 2-85
SUSPENSION HANGER RLU-228 2-86
AXLE AND BRAKE ITEMS (DEXTER) (12-1/4” X 7-1/2”) 2-89
AXLE AND BRAKE ITEMS (DEXTER) (16-1/2” x 7”) 2-91
OUTBOARD PILOT MOUNT HUB AND DRUM 2-93
DISC BRAKE SUSPENSION, BASIC ASSEMBLY 2-95
DISC BRAKE SUSPENSION, GENERAL ASSEMBLY 2-97
DISC BRAKE SUSPENSION, GREASE ASSEMBLY 2-99
DISC BRAKE SUSPENSION, TIRE INFLATION ASSEMBLY 2-101
AIR SYSTEM, U/C ABS DISC BRAKE 2-103
DISC SPRING BRAKE AXLE ITEMS 2-105
THERMALERT TIRE INFLATION SYSTEM (TRIPLE) (SAF AXLES) 2-107
BULKHEAD ASSEMBLY (OPTION) 2-109
BULKHEAD CHAIN RACK LIGHT GENERAL ASSEMBLY (OPTION) 2-111
BULKHEAD CHAIN RACK LIGHT ELECTRICAL ASSEMBLY (OPTION) 2-113
BULKHEAD STOP/TAIL/TURN LIGHT ASSEMBLY (OPTION) 2-115
PULLOUT INSTALLATION (425) (OPTION) 2-117
PULLOUT INSTALLATION (440) (OPTION) 2-121
PULLOUT INSTALLATION (455) (OPTION) 2-125
UPPER DECK EXTENSION BRIDGE STORAGE RACK (OPTION) 2-127
OUTRIGGER INSTALLATION (OPTION) 2-129
20K WINCH INSTALLATION, GENERAL ITEMS (WARN) 2-131

Eastern Wrecker Sales, Inc. - www.easternwrecker.com - 919-553-4038

20K WINCH INSTALLATION, HYDRAULIC/AIR ITEMS (WARN) 2-133
20K WINCH ITEMS (WARN) 2-135
WINCH INSTALLATION, 20K 2 SPEED GENERAL ITEMS (WARN) 2-137
WINCH INSTALLATION, 20K 2 SPEED HYDRAULIC/ELECTRICAL ITEMS (WARN) 2-139
20K 2 SPEED WINCH ITEMS (WARN) 2-141
30K WINCH INSTALLATION, GENERAL ITEMS (WARN) 2-143
30K WINCH INSTALLATION, HYDRAULIC/AIR ITEMS (WARN) 2-145
DUAL WINCH INSTALLATION, 30K (WARN) 2-149
30K WINCH ITEMS (WARN) 2-151
30K 2 SPEED WINCH INSTALLATION, GENERAL ITEMS (WARN) 2-153
30K 2 SPEED WINCH INSTALLATION, HYDRAULIC/AIR/ELECTRICAL ITEMS (WARN) . . . 2-155
30K 2 SPEED WINCH ITEMS (WARN) 2-157
WINCH INSTALLATION (BRADEN) 2-159
WINCH INSTALLATION (BRADEN) 2-164
20K AIR TENSION/RELEASE WINCH INSTALLATION (BRADEN) 2-168
WINCH INSTALLATION, SPRING TENSION CABLE ROLLER 2-171
12,000# WINCH ITEMS (BRADEN) 2-173
20,000# WINCH ITEMS (BRADEN) 2-176
WINCH AIR SHIFT CYLINDER 2-179
WINCH MOTOR ASSEMBLY 2-181
30K UPPER DECK WINCH INSTALLATION (DP) 2-185
30,000# WINCH ITEMS (DP) 2-187
WINCH ROLLER GUIDE - 30K 2-191
WINCH, CABLE AIR TENSION 2-193
12K, 15K, & 20K UPPER DECK WINCH (DP) 2-196
20K WINCH INSTALLATION, AIR T/R (DP) 2-199
12K, 15K, & 20K WINCH ITEMS (DP PLANETARY) 2-201
UPPER DECK COVER ASSEMBLY (OPTION) 2-204
WINCH TRIM PLATE INSTALLATION (OPTION) 2-205
WINCH GUARD INSTALLATION, 20K PIVOT (OPTION) 2-207
4 ROLLER GUIDE INSTALLATION (12K BRADEN) (OPTION) 2-209
GUIDE ASSEMBLY, WINCH 12K (BRADEN) (OPTION) 2-211
4 ROLLER GUIDE INSTALLATION (WARN) (OPTION) 2-213
4 ROLLER GUIDE INSTALLATION (OPTION) 2-215
4 POP-UP ROLLER INSTALLATION (OPTION) 2-217
8 POP-UP ROLLER INSTALLATION (OPTION) 2-220
POP-UP ROLLER INSTALLATION (OPTION) 2-222
TILT CYLINDER (OPTION) 2-223
WINCH GUARD INSTALLATION FOR 20K/30K WARN WINCH (OPTION) 2-224
TIE DOWN INSTALLATION (OPTION) 2-225

Eastern Wrecker Sales, Inc. - www.easternwrecker.com - 919-553-4038

DOCK LEVELER HYDRAULIC INSTALLATION 2-228
DOCK LEVELER ASSEMBLY, SINGLE 60K 2-231
DOCK LEVELER ASSEMBLY, SINGLE 60K ARCTIC 2-233
DOCK LEVELER ASSEMBLY, 60K (455-120) 2-235
DOCK LEVELER ASSEMBLY, 60K ARCTIC (455-120) 2-237
DOCK LEVELER ASSEMBLY, SINGLE 60K EURO 2-239
DOCK LEVELER ASSEMBLY, 120K 2-241
LEG ITEMS, DOCK LEVELER W/ LOCK VALVE 2-244
DOCK LEVELER VALVE 2-247
DOCK LEVELER VALVE (After 01/15/2014) 2-249
LANDING GEAR INSTALLATION 2-250
LANDING GEAR INSTALLATION BOLT - ON 2-251
HYDRAULIC PARK STAND INSTALLATION, GENERAL ITEMS 2-253
HYDRAULIC PARK STAND INSTALLATION, HYDRAULIC ITEMS 2-255
HYDRAULIC CYLINDER 3-1/2 X 20 2-257
CRANK LANDING GEAR 2-259
25 HP GAS ENGINE PACKAGE, UPPER DECK (OPTION) 2-264
25HP DIESEL ENGINE PACKAGE 2-270
UPPER DECK ENGINE STAND INSTALLATION 2-272
FRONT MOUNT ENGINE INSTALLATION 2-273
FRONT EXTENSION ENGINE PACKAGE MOUNT INSTALLATION (OPTION) 2-274
HYDRAULIC CONVERSION KIT, BALL TO FLAT (OPTION) 2-275
TILT CHECK VALVE INSTALLATION 2-276
TILT CYLINDER CHECK VALVE INSTALLATION (OPTION) 2-277
STROBE LIGHT INSTALLATION SIDE (OPTION) 2-278
REAR SIDE ELECTRICAL OUTLET INSTALLATION (OPTION) 2-279
7-WAY ELECTRICAL INSTALLATION (OPTION) 2-281
6-WAY ELECTRICAL INSTALLATION (OPTION) 2-283
WINCH WORK LIGHT INSTALLATION (OPTION) 2-285
WORK LIGHT ASSEMBLY, BULKHEAD (OPTION) 2-287
UNDERDECK LIGHT INSTALLATION (440-53) (OPTION) 2-288
U/D SLOPE LIGHT INSTALLATION (OPTION) 2-289
SLOPE WORK LIGHT INSTALLATION, LED (OPTION) 2-290
STROBE INSTALLATION, BUMPER (OPTION) 2-291
BATTERY BACKUP BUMPER STROBE LIGHT INSTALLATION (OPTION) 2-292
P/O MARKER LIGHT INSTALLATION (OPTION) 2-293
P/O EXTENSION LIGHT ASSEMBLY (OPTION) 2-295
FOUR CORNER LIGHT INSTALLATION (OPTION) 2-297
SWINGOUT LIGHT INSTALLATION (OPTION) 2-298
SWINGOUT LIGHT INSTALLATION (OPTION) 2-299

Eastern Wrecker Sales, Inc. - www.easternwrecker.com - 919-553-4038

STROBE INSTALLATION (OPTION) 2-301
BACKUP ALARM/LIGHT INSTALLATION (OPTION) 2-303
STROBE AND TURN BULKHEAD INSTALLATION (OPTION) 2-305
STROBE AND TURN LIGHT INSTALLATION FOR BULKHEAD (OPTION) 2-307
ELECTRICAL DISCONNECT SWITCH INSTALLATION (OPTION) 2-308
FRONT/REAR HARNESS INSTALLATION (OPTION) 2-309
AIR OUTLET ASSEMBLY (OPTION) 2-310
12/20K WINCH GUARD INSTALLATION (BRADEN) (OPTION) 2-311
AIR DIGITAL SCALE, LOADMAXX SYSTEM (OPTION) 2-313
AIR DIGITAL SCALE, LOADMAXX SYSTEM ARCTIC (OPTION) 2-315
AIR DIGITAL SCALE, QUICKLOAD SYSTEM (OPTION) 2-317
AIR DIGITAL SCALE, RIGHT WEIGH SYSTEM (OPTION) 2-319
UPPER DECK ROLLER INSTALLATION (OPTION) 2-320
REGISTRATION HOLDER INSTALLATION (OPTION) 2-321
PRESSURE GAUGE INSTALLATION (OPTION) 2-322
PRESSURE GAUGE INSTALLATION, ARCTIC (OPTION) 2-323
UPPER DECK TOOLBOX INSTALLATION (OPTION) 2-325
UPPER DECK TOOLBOX LID INSTALLATION (NON-WEIGHT BEARING) (OPTION) 2-327
CENTER RUB PLATE COVER INSTALLATION (OPTION) 2-328
SPECIAL BULKHEAD INSTALLATION (OPTION) 2-329
SPARE TIRE CARRIER (OPTION) 2-331
CHAIN TRAY ASSEMBLY (OPTION) 2-332
FRONT POCKET PLATFORM ASSEMBLY 2-333
SPARE TIRE MOUNT ASSEMBLY 2-334
MUD FLAP INSTALLATION (LOCATED UNDER G/N) 2-335
HORIZONTAL SPARE TIRE MOUNT ASSEMBLY 2-336
FRONT FLIP EXTENSION (OPTION) 2-337
SLOPE FILLER DECK INSTALLATION (OPTION) 2-338
FOLDING STEP ASSEMBLY (DOUBLE DROP FRAME ONLY) (OPTION) 2-339

3 Numerical Index

Eastern Wrecker Sales, Inc. - www.easternwrecker.com - 919-363-4038

Eastern Wrecker Sales, Inc. - www.easternwrecker.com - 919-553-4038

Chapter 1

Instructions for Ordering Parts

ORDER PARTS FROM LANDOLL PARTS DISTRIBUTION CENTER

**** Repair parts must be ordered through an Authorized Dealer ****

PHONE NO.: 1-800-423-4320 OR 1-800-428-5655 OR 1-785-562-5381 FAX NO.: 888-527-3909
ORDER ONLINE: companystore.landoll.com

IDENTIFICATION PLATE

The identification plate, which lists the model number and serial number, is located on the left side of the hitch (See Figure 1-1.)

SERIAL NUMBER NOMENCLATURE

The serial number for the 425B/440/455 semitrailer is located on the identification plate.The serial number is the last five digits of the VIN number. The 4th, 5th, and 6th digits in the VIN number are the model number of the trailer.

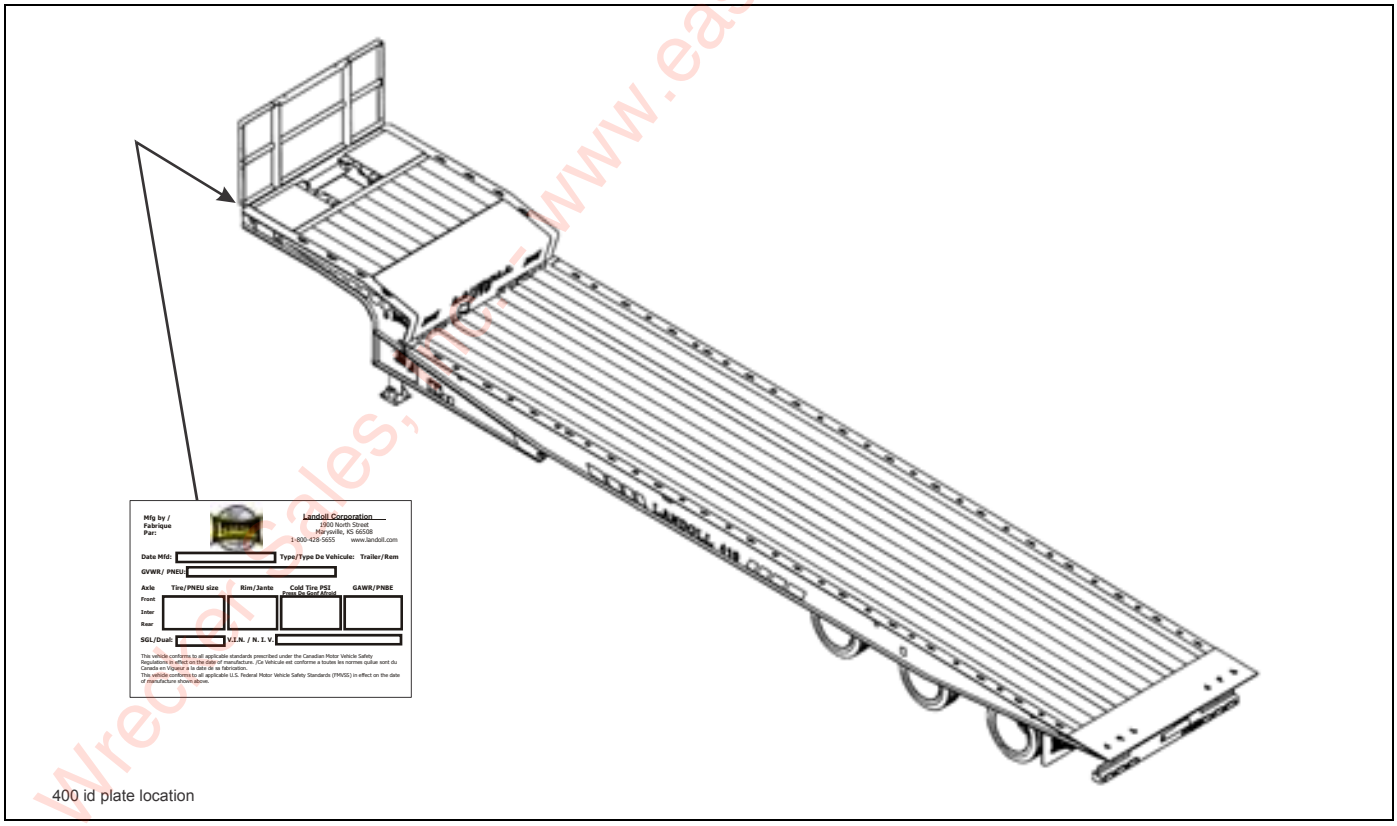

Figure 1-1: Identification Plate and Location

Eastern Wrecker Sales, Inc. - www.easternwrecker.com - 919-553-4038

Page Intentionally Blank

Eastern Wrecker Sales, Inc. - www.easternwrecker.com - 919-553-4038

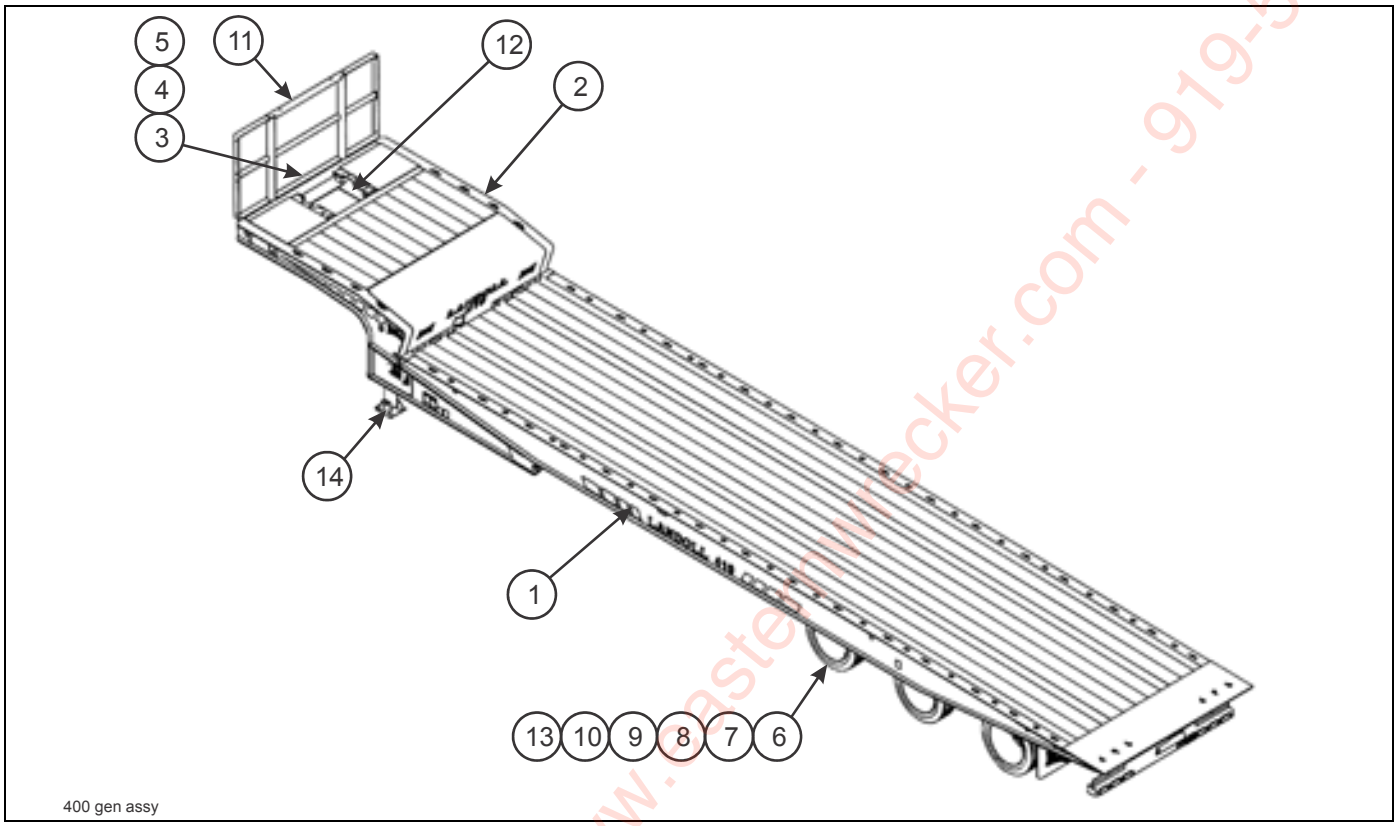

Figure 2-1: General Assembly

GENERAL ASSEMBLY

ITEM	PAGE NO.	DESCRIPTION	QTY.
1	2-2 - 2-5	DECAL INSTALLATION	
2	2-6 - 2-8	UPPER DECK ASSEMBLY	
3	2-10 - 2-37	HYDRAULIC SYSTEM	
4	2-38 - 2-39	ELECTRICAL SYSTEM	
5	2-40 - 2-45	AIR SYSTEM	
6	2-46 - 2-93	UNDERCARRIAGE ASSEMBLY, AIR RIDE SUSPENSION, AIR BRAKE SYSTEMS, GREASE SYSTEM, TIRE INFLATION, AXLES, HUB AND DRUM ASSEMBLY	
7	2-94 - 2-107	UNDERCARRIAGE ASSEMBLY - DISC BRAKE SUSPENSION, DISC BRAKE SYSTEMS, GREASE SYSTEM, TIRE INFLATION, AXLES, HUB AND DRUM ASSEMBLY	
8	2-108 - 2-129	BULKHEAD/PULLOUT/OUTRIGGER ASSEMBLIES (OPTION)	
9	2-130 - 2-225	WINCH ASSEMBLIES	
10	2-226 - 2-247	DOCK LEVELER ASSEMBLIES (OPTION)	
11	2-250 - 2-259	LANDING GEAR ASSEMBLIES (OPTION)	
12	2-260 - 2-274	HYDRAULIC ENGINE ASSEMBLIES (NOT SHOWN) (OPTION)	
13	2-275 - 2-339	MISCELLANEOUS OPTIONS (NOT SHOWN)	

Eastern Wrecker Sales, Inc. - www.easternwrecker.com - 919-553-4038

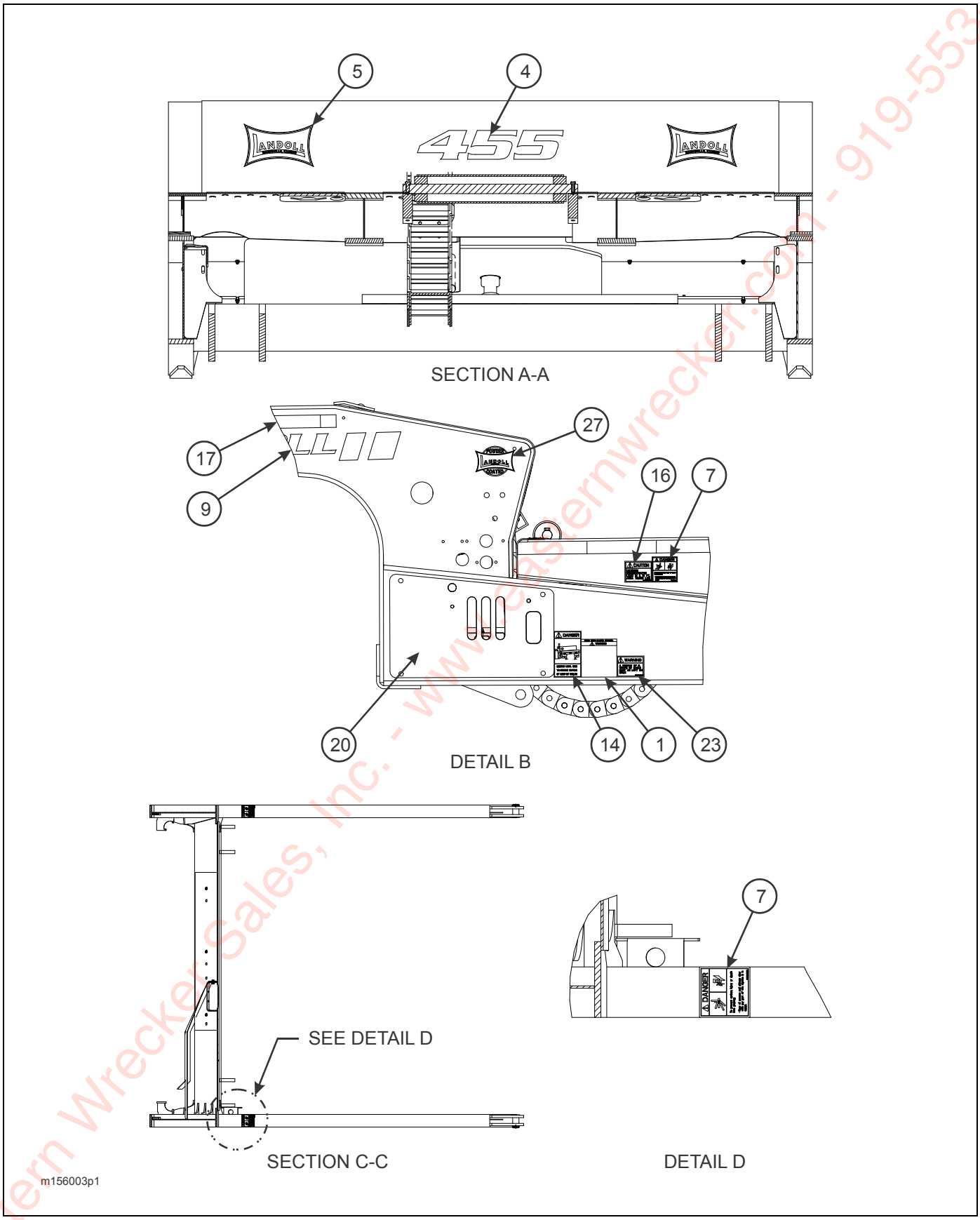

Figure 2-2: Decal Installation (1 of 2)

Eastern Wrecker Sales, Inc. - www.easternwrecker.com - 919-553-4038

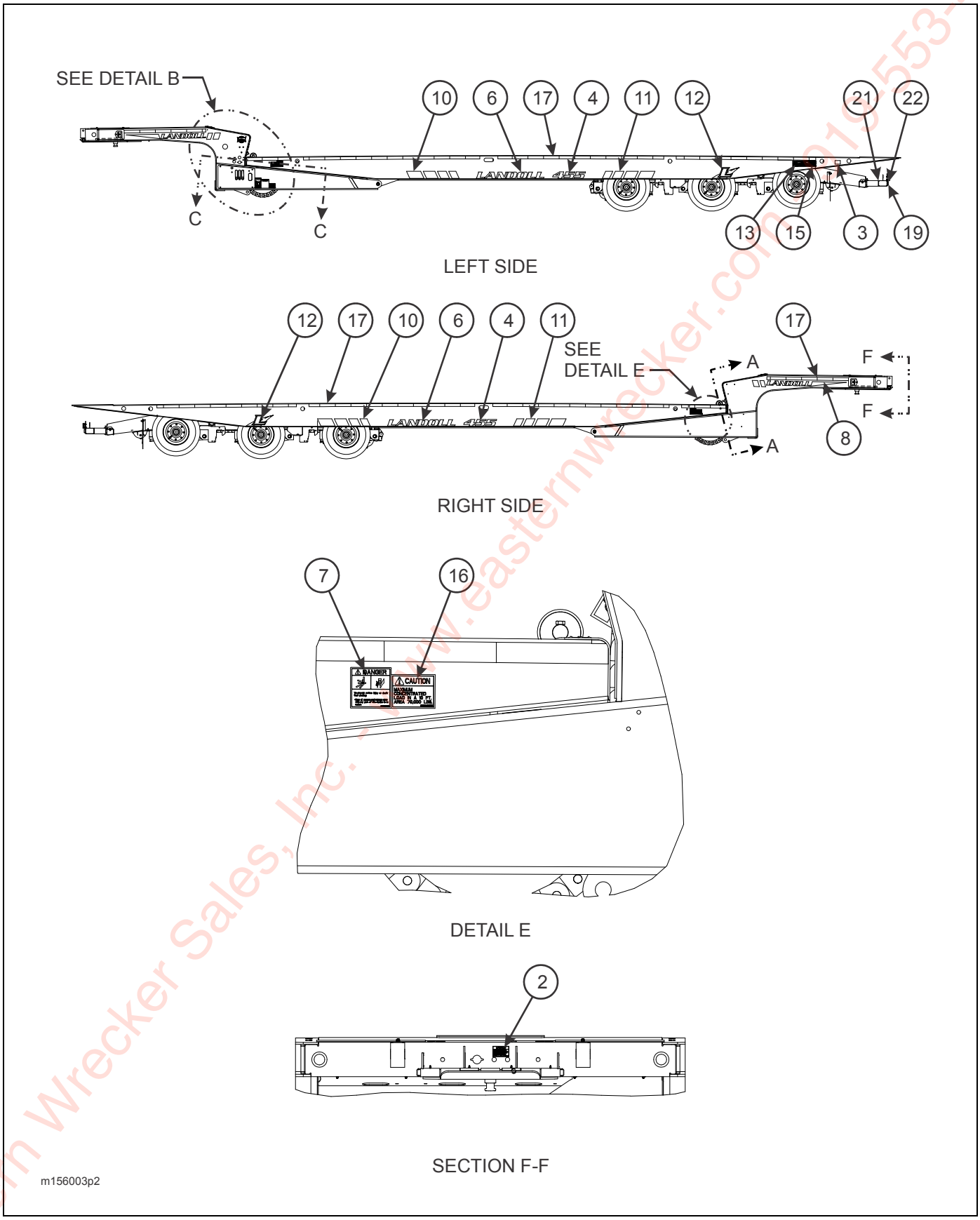

Figure 2-3: Decal Installation (2 of 2)

Eastern Wrecker Sales, Inc. - www.easternwrecker.com 919-553-4038

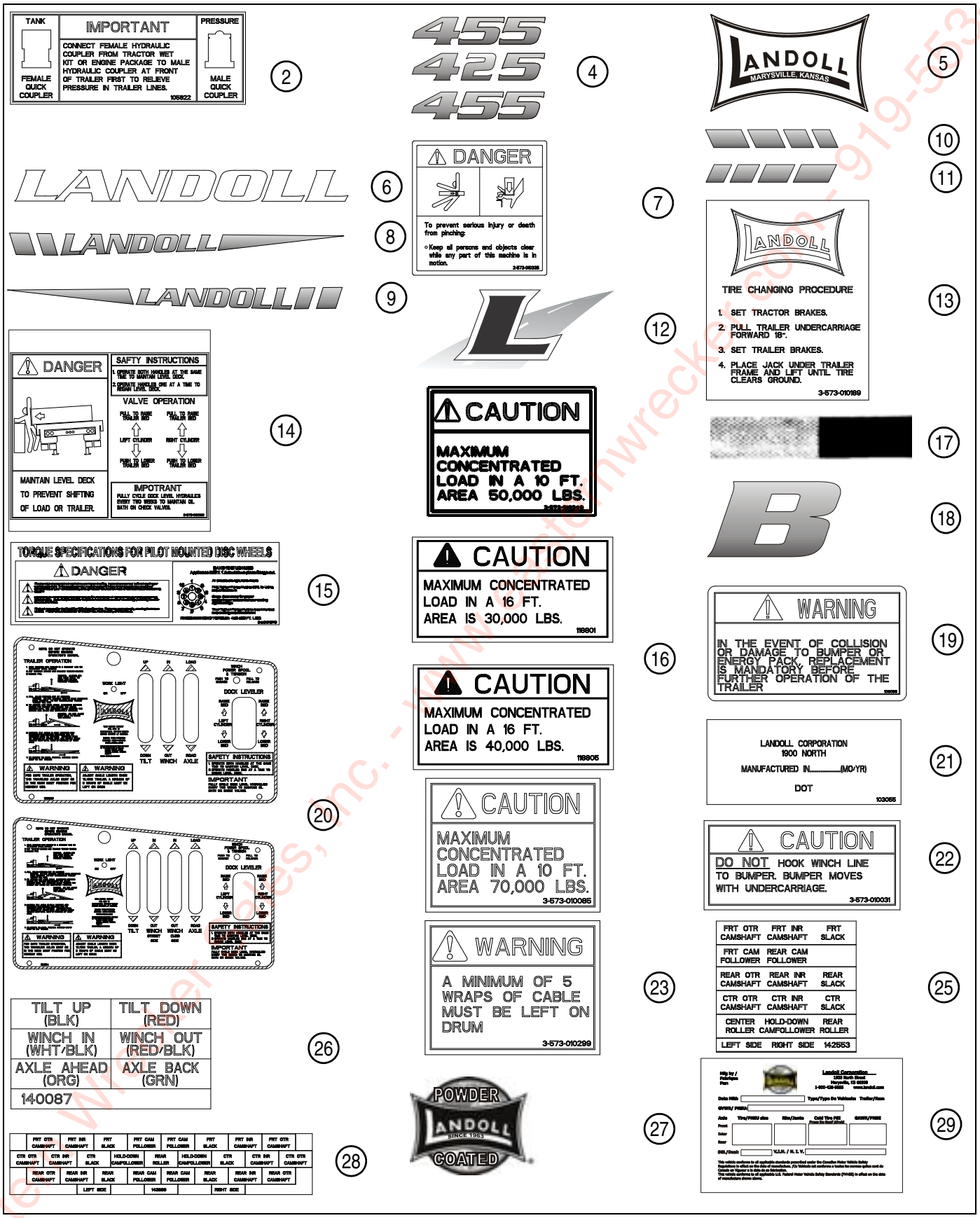

Figure 2-4: Decals

Eastern Wrecker Sales, Inc. - www.easternwrecker.com - 919-553-4038

DECAL INSTALLATION

ITEM	PART NO.	DESCRIPTION	QTY.
	156003	DECAL INSTALLATION 455	REF
	153769	DECAL INSTALLATION 425	REF
	156006	DECAL INSTALLATION 440	REF
1	100600	DECAL, WARNING BRADEN WINCH	REF
2	105822	DECAL, HYDRAULIC COUPLER	REF
3	101855	DECAL, ABS	1
4	155278	DECAL, 455 REFLECTIVE	3
	179926	DECAL, 455 ANNIVERSERY ADDITION	3
	153721	DECAL, 425 REFLECTIVE	3
	155277	DECAL, 440 REFLECTIVE	3
	179925	DECAL, 440 ANNIVERSERY ADDITION	3
5	153754	DECAL, BOW-TIE (WHITE/DK) REFLECTIVE	2
	153755	DECAL, BOW-TIE (BLACK/LT) REFLECTIVE	2
6	153750	DECAL, LANDOLL 5" REFLECTIVE	2
7	2-573-010335	DECAL, DANGER PINCH	4
8	153748	DECAL, TAPERED STRIPE LEFT REFLECTIVE	1
9	153749	DECAL, TAPERED STRIPE RIGHT REFLECTIVE	1
10	153752	DECAL, CHEVRON LEFT REFLECTIVE	2
11	153753	DECAL, CHEVRON RIGHT REFLECTIVE	2
12	153751	DECAL, HIGHWAY L 7" REFLECTIVE	2
13	3-573-010189	DECAL, TIRE CHANGING PROCEDURE	1
14	3-573-010202	PLACARD, DANGER! DOCK LEVELER OPERATION	REF
15	3-573-010210	DECAL, TORQUE SPEC 8-10 STUD HUB	1
16	3-573-010349	DECAL, CAUTION 50K/10FT CONC. LOAD	2
	118801	DECAL, CAUTION 30K/16FT CONC. LOAD	2
	118805	DECAL, CAUTION 40K/16FT CONC. LOAD	2
	3-573-010085	DECAL, CAUTION CONC. LOAD 70000 LBS.	2
17	3-573-010377	DECAL, 2" REFLEXITE TAPE RD/WHT	AR
18	153744	DECAL, B 5" REFLECTIVE (USED W/ 425 MODEL ONLY)	3
19	103056	DECAL, ENERGY BUMPER WARNING	1
20	139520	PLACARD, CONTROLS	1
	161824	PLACARD, CONTROLS	1
21	103055	DECAL, ENERGY CERTIFICATION	1
22	3-573-010031	DECAL, BUMPER	1
23	3-573-010299	DECAL, WARNING WINCH CABLE	1
25	142553	DECAL, GREASE TRAILER (425/440)	1
26	140087	DECAL, 400 REMOTE	1
27	153798	DECAL, POWDER COATED REFLECTIVE	1
28	143688	DECAL, GREASE TRAILER (455)	1
29	155780	TRAILER VIN PLATE	1
30	156010	RIVET, BLIND .156 X 1/2 GRIP	4

NOTE: IF TRAILER IS REPAINTED OR IF DECALS BECOME ILLEGIBLE, ORDER NEW ONES FROM THE FACTORY AND REPLACE

Eastern Wrecker Sales, Inc. - www.easternwrecker.com - 919-553-4038

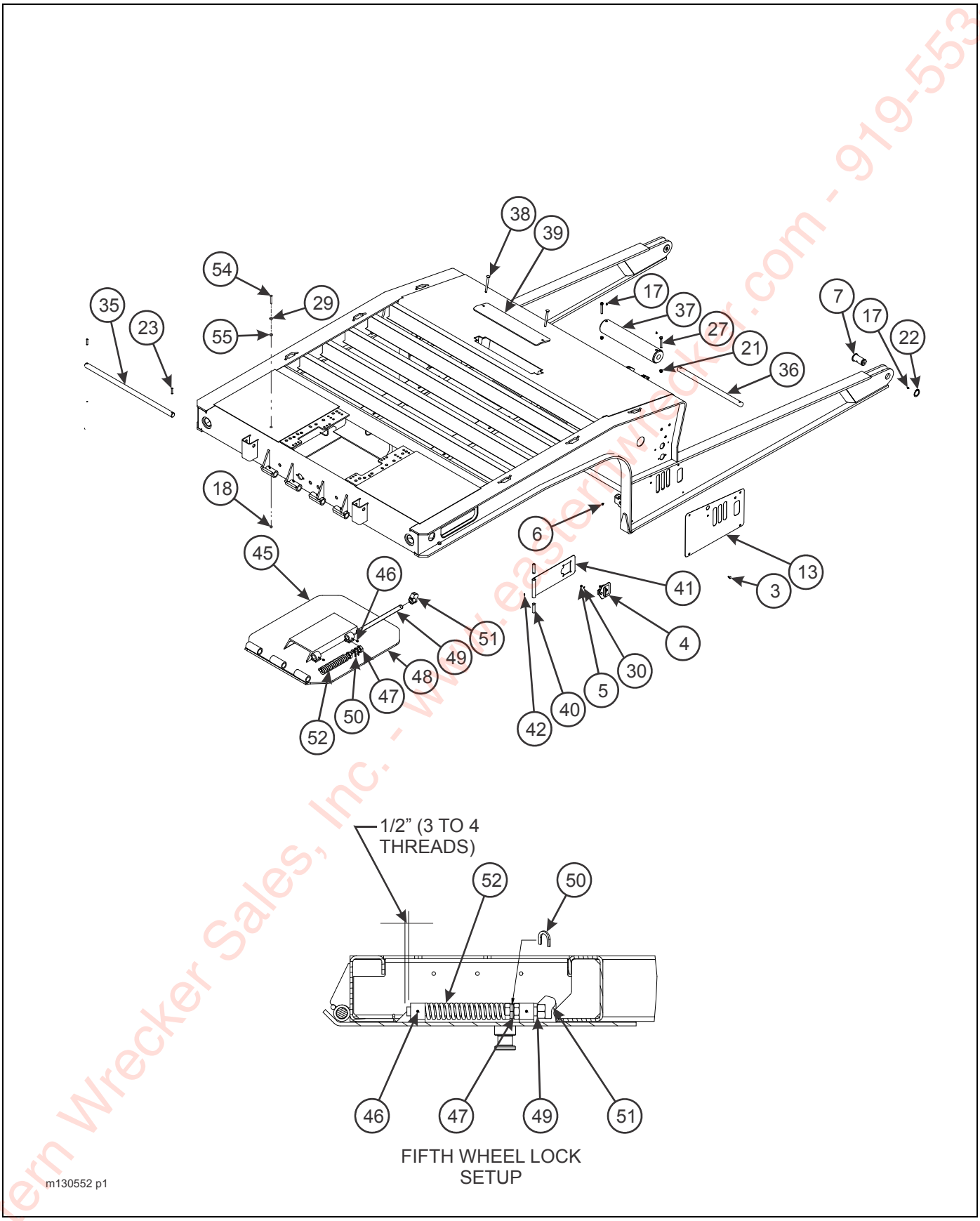

Figure 2-5: Upper Deck Assembly (1 of 2)

Eastern Wrecker Sales, Inc. - www.easternwrecker.com - 919-553-4038

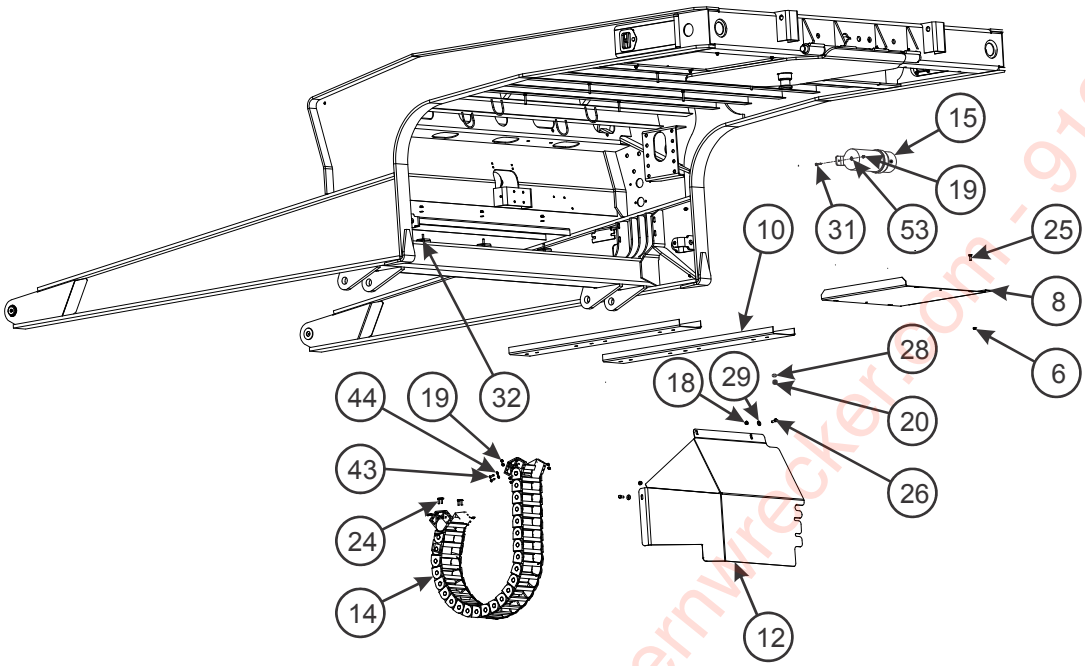

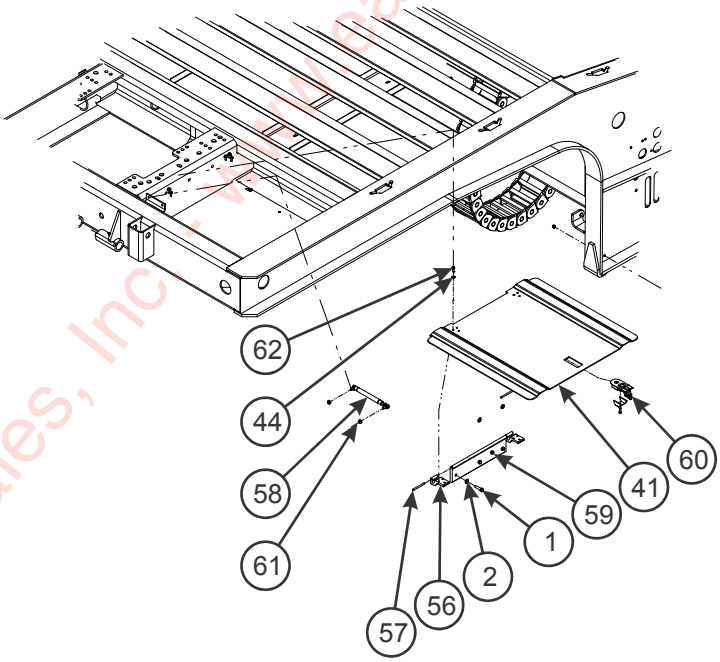

GALVANIZED FLIP-UP TOOLBOX OPTION

m130552 p2

Figure 2-6: Upper Deck Assembly (2 of 2)

Eastern Wrecker Sales, Inc. - www.easternwrecker.com - 919-553-4038

UPPER DECK ASSEMBLY

ITEM	PART NO.	DESCRIPTION	QTY.
	-----	G/N FRAME ASSEMBLY	
1	1-654-010051-07	SCREW, HEX HEAD CAP 3/8-16 X 1-1/2 GR5	12
2	1-861-010032-10	WASHER, FLAT 3/8N	12
3	105909	SCREW, RD HEAD SQ NECK 5/16-18 X 3/4	4
4	114814	LATCH FOLDING T LOCKABLE	2
5	115877	NUT, HEAVY HEX 1/4-20	8
6	1-512-010005-03	NUT, HEX LOCK 5/16-18 GRB	8
7	116943	PIN WELDMENT PIVOT	2
8	117544	PLATE, TOOLBOX BOTTOM	2
	137963	PLATE, TOOLBOX BOTTOM (455-120)	2
	164115	PLATE, TOOLBOX BOTTOM (455-108)	2
10	117565	COVER, HOSE LOWER	3
12	121125	SHIELD, HYDRAULIC CONTROLS	1
13	139520	PLACARD, CONTROL PANEL (SEE PAGE 2-5)	REF
	161824	PLACARD, CONTROL PANEL (SEE PAGE 2-5)	REF
14	122380	E-CHAIN G/N FRAME	1
	135778	E-CHAIN INDIVIDUAL LINK	1
	135779	E-CHAIN MOUNTING BRACKET	1
15	150076	MANUAL, TUBE 4-1/4”	1
16	-----	GOOSENECK WELDMENT	1
17	1-298-010001-1	ZERK FITTING 1/4	4
18	1-510-010001	NUT, FLANGE LOCK 3/8-16	7
19	1-512-010005-01	NUT, HEX LOCK 1/4-20 GRB	11
20	1-512-010005-03	NUT, HEX LOCK 5/16-18 GRB	21
21	1-512-010005-09	NUT, HEX LOCK 1/2-13 GRB	4
22	1-630-010021-02	RING, RETAINING 2 HD	2
23	1-647-010004255	PIN, SPRING SLOTTED 3/8 X 2	2
24	1-654-010047-06	SCREW, HEX HEAD CAP 1/4-20 X 1 GR5	4
25	1-654-010049-05	SCREW, HEX HEAD CAP 5/16-18 X 1 GR5	8
26	1-654-010051-05	SCREW, HEX HEAD CAP 3/8-16 X 1 GR5	3
27	1-654-010055-11	SCREW, HEX HEAD CAP 1/2-13 X 3-1/2 GR5	2
28	1-861-010032-08	WASHER, FLAT 5/16N	9
29	1-861-010032-11	WASHER, FLAT 3/8W	7
30	1-861-010034-09	WASHER, SPLIT LOCK 1/4	8
31	1-654-010047-07	SCREW, HEX HEAD CAP 1/4-20 X 1-1/4 GR5	3
32	2-181-010001	CLAMP	3
	103817	CLAMP, HOSE	4
34	3-201-010002	CONDUIT, PLASTIC FLEX 3/8 (NOT SHOWN)	AR
35	3-557-010469	HINGE PIN, FIFTH WHEEL	1
36	3-642-010134	ROD ROLLER	1
	161810	ROD ROLLER	2
37	3-645-010059	ROLLER WELDMENT, CABLE-UPPER DECK	1
	161809	ROLLER WELDMENT, CABLE-UPPER DECK (BEFORE 1-19-2015)	2
	187787	ROLLER WELDMENT, HDPU, 18-3/4 (AFTER 01/19/2015)	
38	100939	SCREW, RD HEAD SQ NECK 1/2-13 X 5-1/2	2
39	131196	PLATE, WINCH CABLE WEAR U/D	1
	161808	PLATE, WINCH CABLE WEAR U/D	1
40	135181	BUSHING, NYLATRON	4
41	136352	DOOR WELDMENT, TOOLBOX	REF

Eastern Wrecker Sales, Inc. - www.easternwrecker.com - 919-553-4038

UPPER DECK ASSEMBLY

ITEM	PART NO.	DESCRIPTION	QTY.
	137070	DOOR WELDMENT, TOOLBOX GALV.	REF
	118800	DOOR WELDMENT, TOOLBOX	
	140851	DOOR WELDMENT, TOOLBOX	
42	1-654-010147-06	SCREW, RD HEAD SELF TAPPING #6-20 X 3/4	8
43	108610	SCREW, BUTTON HEAD 1/4-20 X 1	4
44	1-861-010032-06	WASHER, FLAT 1/4N	4
45	141609	HITCH PLATE ASSEMBLY (INCL ITEMS 46-52)	1
46	1-298-010001-1	FITTING, GREASE 1/4-28 STR SHORT	2
47	100823	NUT, HEX JAM 1-1/4-7 GRB	2
48	116822	HITCH, PLATE (21" KINGPIN)	1
49	117556	LATCH ROD	1
50	117562	SHIM, HITCH	2
51	118889	CAM, FIFTH WHEEL LATCH	1
52	2-720-010002	SPRING CLAMP	1
53	1-861-010032-07	WASHER, FLAT 1/4	3
54	119146	SCREW, BUTTON HEAD CAP 3/8-16 X 2-3/4	4
55	805-2	BUSHING, STEP	4
56	108545	HINGE, DOOR FRAME SIDE	8
57	108601	PIN, DOOR HINGE	8
58	110435	CONSOLE LIFT, GAS SPRING	4
59	116856	HINGE, BASE TOOLBOX LID	4
60	118853	LATCH, COMPRESSION	4
61	1-510-010004-03	NUT, FLANGE HEAD SPIRALOCK 5/16-18	8
62	1-654-010047-04	SCREW, HEX HEAD CAP 1/4-20 X 3/4 GR5	24

Eastern Wrecker Sales, Inc. - www.easternwrecker.com - 919-553-4038

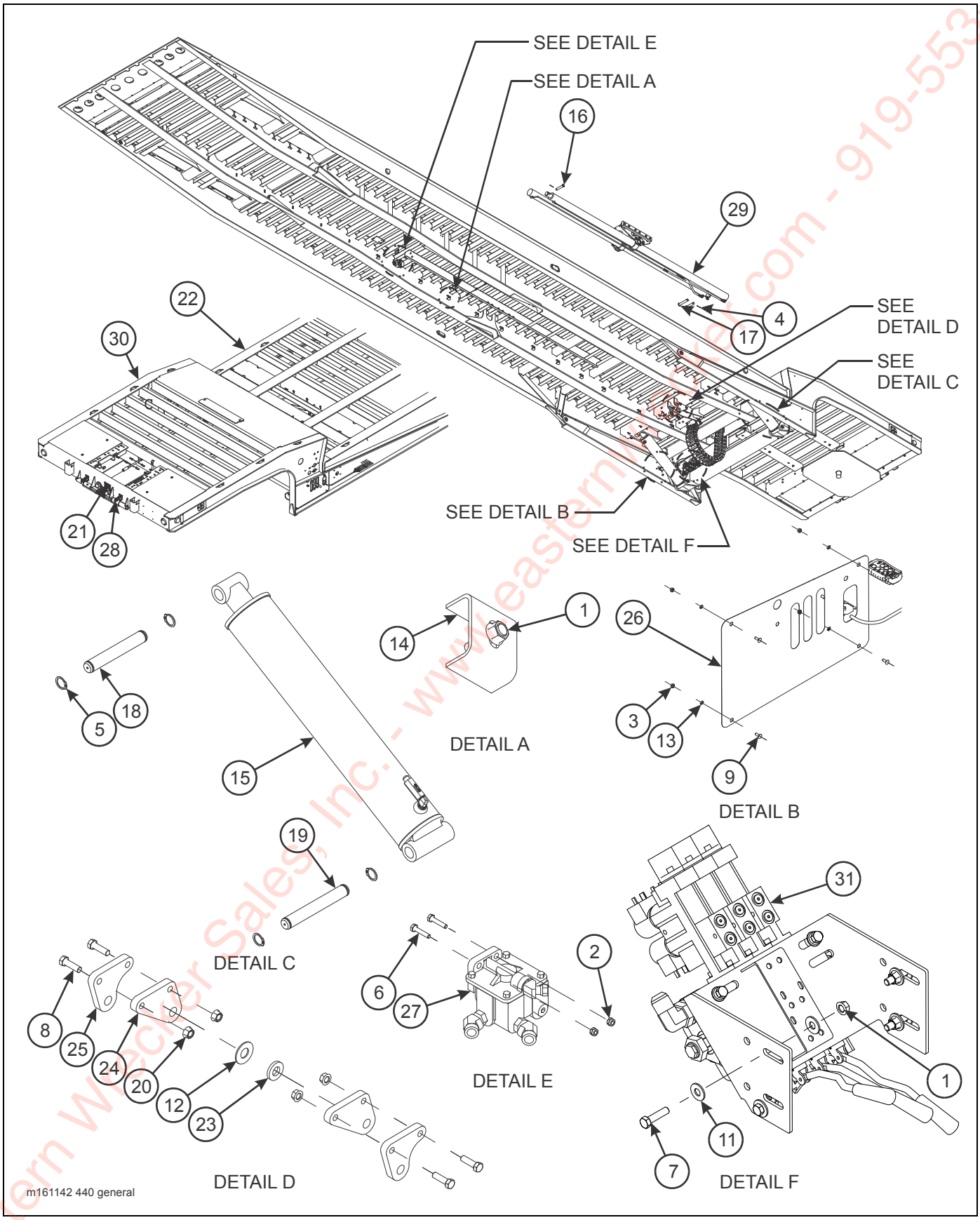

Figure 2-7: Hydraulic Electrical Air General Assembly (425 & 440)

Eastern Wrecker Sales, Inc. - www.easternwrecker.com - 919-553-4038

HYDRAULIC ELECTRICAL AIR GENERAL ASSEMBLY (425 & 440)

ITEM	PART NO.	DESCRIPTION	QTY.
	143214	HYDRAULIC ELECTRICAL AIR (425)	
	161142	HYDRAULIC ELECTRICAL AIR (440)	REF
1	1-510-010001	NUT, HEX FLANGE LOCK 3/8-16	14
2	1-512-010005-01	NUT, HEX LOCK 1/4-20 GRB	2
3	1-512-010007-05	NUT, HEX 1/4-20	4
4	1-557-010362-54	PIN, COTTER 3/16 X 2-1/4	2
5	1-630-010021-01	RING, 1.5 RETAINING HD	8
6	1-654-010027-7	SCREW, HEX HEAD CAP 1/4-20 X 1-1/4 GR8	2
7	1-654-010051-07	SCREW, HEX HEAD CAP 3/8-16 X 1-1/2 GR5	4
8	1-654-010061-07	SCREW, HEX HEAD CAP 3/4-10 X 2-1/2 GR5	4
9	1-654-010158-1	SCREW, RD HEAD SQ NECK 1/4-20 X 3/4 GR2	4
10	1-796-010003-02	TIE STRAP PLASTIC .184 X 14 (NOT SHOWN)	AR
11	1-861-010032-11	WASHER, FLAT 3/8	8
12	1-861-010032-29	WASHER, FLAT 1-1/4W	1
13	1-861-010034-09	WASHER, SPLIT LOCK 1/4	4
14	2-181-010001	CLAMP, HOSE	10
15	3-242-010189	CYLINDER, LIFT 6 X 41 (SEE PAGE 2-33)	2
16	3-557-010031	PIN, CYL U/C	1
17	3-557-010033	PIN, CYL BUTT END	1
18	3-557-010470-01	PIN, CYL BUTT END	2
19	3-557-010470-02	PIN, CYL ROD END	2
20	103841	NUT, FLANGE PREVAILING TORQUE 3/4-10	4
21	105822	DECAL, HYDRAULIC COUPLER	1
22	-----	FRAME WELDMENT	REF
23	123150	WASHER, CYLINDER PIN	1
24	127422	ANCHOR, CYL BOLT-ON	2
25	127691	ANCHOR, CYLINDER ADJUST BOLT-ON	REF
26	139520	PLACARD, CONTROLS	1
27	141607	AIR BOOSTER VALVE ASSEMBLY (SEE PAGE 2-43)	1
28	171320	CONNECTORS, AIR/HYDRAULIC (FLOW CONTROL) (SEE PAGE 2-19)	1
29	144673	U/C CYL ASSEMBLY (440-48) (SEE PAGE 2-25)	1
	114674	U/C CYL ASSEMBLY (440-50CA/52HD) (SEE PAGE 2-25)	1
	144675	U/C CYL ASSEMBLY (440-53/55) (SEE PAGE 2-25)	1
	144676	U/C CYL ASSEMBLY (425-45) (SEE PAGE 2-25)	1
	144677	U/C CYL ASSEMBLY (425-41/440-41) (SEE PAGE 2-25)	1
30	-----	FRAME ASSEMBLY, G/N	REF
31	148241	VALVE ASSEMBLY, 3 SPOOL (SEE PAGE 2-21)	REF

Eastern Wrecker Sales, Inc. - www.easternwrecker.com - 919-553-4038

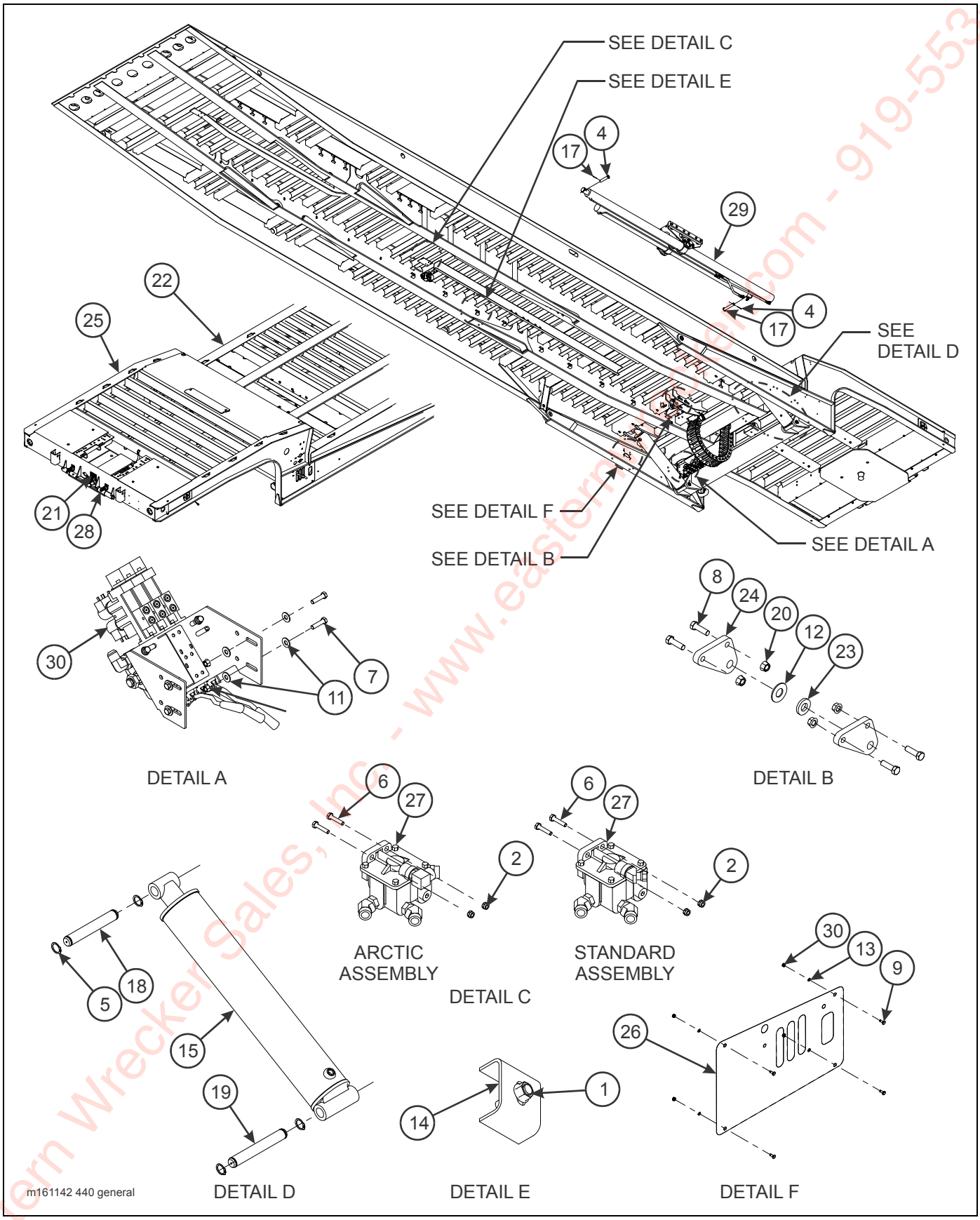

Figure 2-8: Hydraulic Electrical Air General Assembly (455)

Eastern Wrecker Sales, Inc. - www.easternwrecker.com - 919-553-4038

HYDRAULIC ELECTRICAL AIR GENERAL ASSEMBLY (455)

ITEM	PART NO.	DESCRIPTION	QTY.
	161157	HYDRAULIC ELECTRICAL AIR	REF
1	1-510-010001	NUT, HEX FLANGE LOCK 3/8-16	14
2	1-512-010005-01	NUT, HEX LOCK 1/4-20 GRB	2
3	1-512-010007-05	NUT, HEX 1/4-20	4
4	1-557-010362-54	PIN, COTTER 3/16 X 2-1/4	2
5	1-630-010021-01	RING, 1.5 RETAINING HD	8
6	1-654-010027-7	SCREW, HEX HEAD CAP 1/4-20 X 1-1/4 GR8	2
7	1-654-010051-07	SCREW, HEX HEAD CAP 3/8-16 X 1-1/2 GR5	4
8	1-654-010061-07	SCREW, HEX HEAD CAP 3/4-10 X 2-1/2 GR5	4
9	1-654-010158-1	SCREW, RD HEAD SQ NECK 1/4-20 X 3/4 GR2	4
10	1-796-010003-02	TIE STRAP PLASTIC .184 X 14 (NOT SHOWN)	AR
11	1-861-010032-11	WASHER, FLAT 3/8	8
12	1-861-010032-29	WASHER, FLAT 1-1/4W	1
13	1-861-010034-09	WASHER, SPLIT LOCK 1/4	4
14	2-181-010001	CLAMP, HOSE	10
15	3-242-010189	CYLINDER, LIFT 6 X 41 (SEE PAGE 2-33)	2
16	3-557-010031	PIN, CYL U/C	1
17	3-557-010033	PIN, CYL BUTT END	1
18	3-557-010470-01	PIN, CYL BUTT END	2
19	3-557-010470-02	PIN, CYL ROD END	2
20	103841	NUT, FLANGE PREVAILING TORQUE 3/4-10	4
21	105822	DECAL, HYDRAULIC COUPLER	1
22	-----	FRAME WELDMENT	REF
23	123150	WASHER, CYLINDER PIN	1
24	127422	ANCHOR, CYL BOLT-ON	2
25	-----	FRAME ASSEMBLY, GOOSENECK	REF
26	139520	PLACARD, CONTROLS	1
27	141607	AIR BOOSTER VALVE ASSEMBLY (SEE PAGE 2-43)	1
	163363	VALVE ASSEMBLY, AIR BOOSTER ARCTIC (SEE PAGE 2-45)	1
28	171320	CONNECTORS, AIR/HYDRAULIC (FLOW CONTROL) (SEE PAGE 2-19)	1
29	144673	U/C CYL ASSEMBLY (455-50/53/55HD) (SEE PAGE 2-25)	1
	144676	U/C CYL ASSEMBLY (455-48/50CA) (SEE PAGE 2-25)	1
	144677	U/C CYL ASSEMBLY (455HD-50CA) (SEE PAGE 2-25)	1
	170447	U/C CYL ASSEMBLY ARCTIC (455-48/50CA) (SEE PAGE 2-25)	1
	170448	U/C CYL ASSEMBLY ARCTIC (455-48/50CA) (SEE PAGE 2-25)	1
30	148241	VALVE ASSEMBLY, 3 SPOOL (SEE PAGE 2-21)	REF

Eastern Wrecker Sales, Inc. www.easternwrecker.com - 919-556-4038

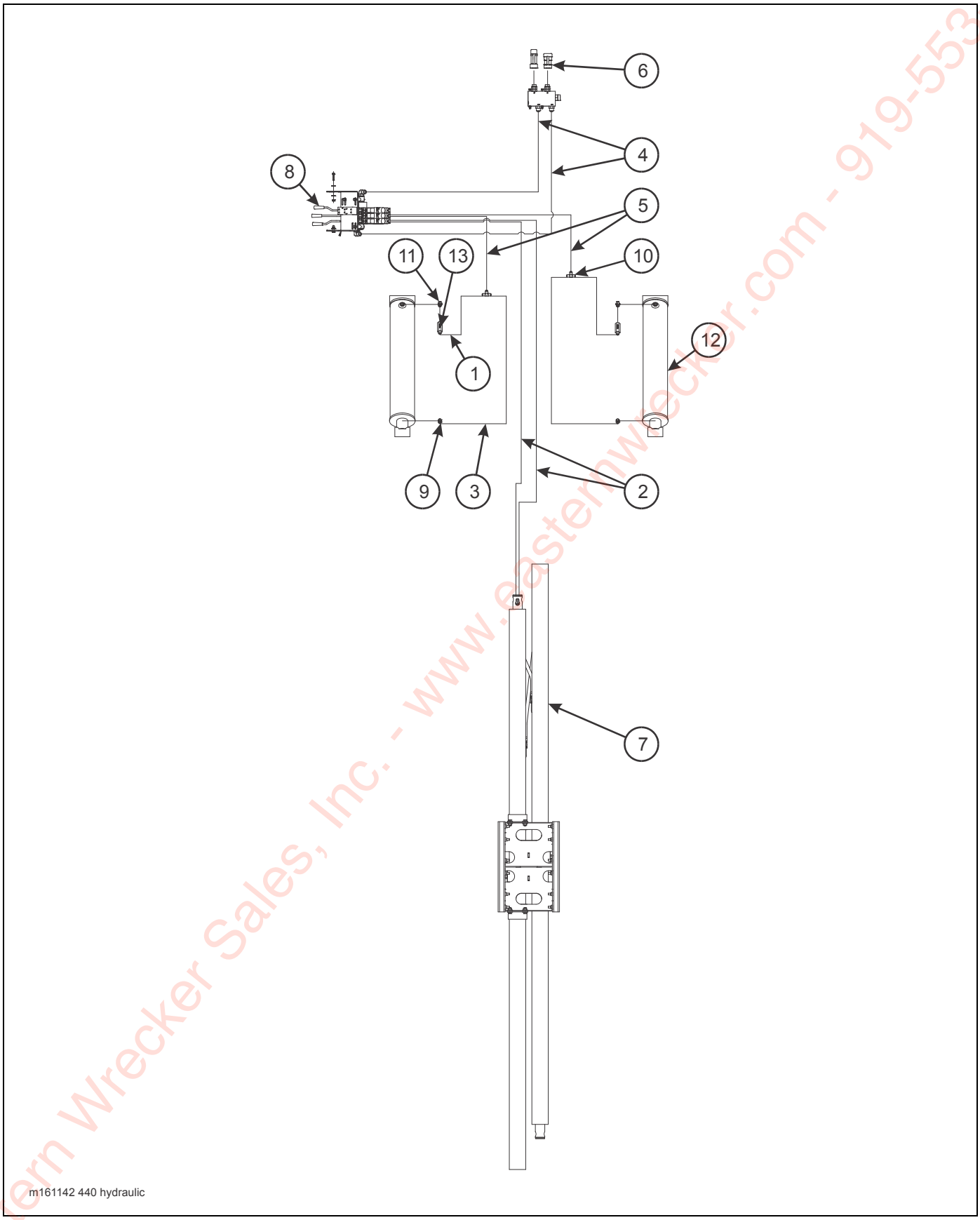

Figure 2-9: Hydraulic Assembly (425 & 440)

Eastern Wrecker Sales, Inc. - www.easternwrecker.com - 919-553-4038

HYDRAULIC ASSEMBLY (425 & 440)

ITEM	PART NO.	DESCRIPTION	QTY.
	143214	HYDRAULIC ELECTRICAL AIR (425)	
	161142	HYDRAULIC ELECTRICAL AIR (440)	REF
1	1-397-010301064	HOSE ASSEMBLY 1/2 X 64	2
2	1-397-010301160	HOSE ASSEMBLY 1/2 X 160	2
3	1-397-010302084	HOSE ASSEMBLY 1/2 X 84	2
4	1-397-010305190	HOSE ASSEMBLY 3/4 X 190 (NOT USED W/ ENGINE PACKAGE)	2
	1-397-010305616	HOSE ASSEMBLY 3/4 X 216	2
5	142068	HOSE ASSEMBLY 1/2 X 39	2
6	171320	CONNECTORS, AIR/HYDRAULIC (FLOW CONTROL) (SEE PAGE 2-19)	REF
7	-----	U/C CYLINDER ASSEMBLY (SEE PAGE 2-25)	REF
8	148241	VALVE ASSEMBLY 3 SPOOL (SEE PAGE 2-21)	REF
9	202702-8-8S	ADAPTER	2
10	2033-8-8S	ADAPTER TEE	2
11	2062-8-8S	ADAPTER	2
12	3-242-010189	CYLINDER, LIFT 6 X 41 (SEE PAGE 2-33)	REF
13	3-846-010155	VALVE, RESTRICTOR, 1/16-ONE WAY	2

Eastern Wrecker Sales, Inc. - www.easternwrecker.com - 919-553-4038

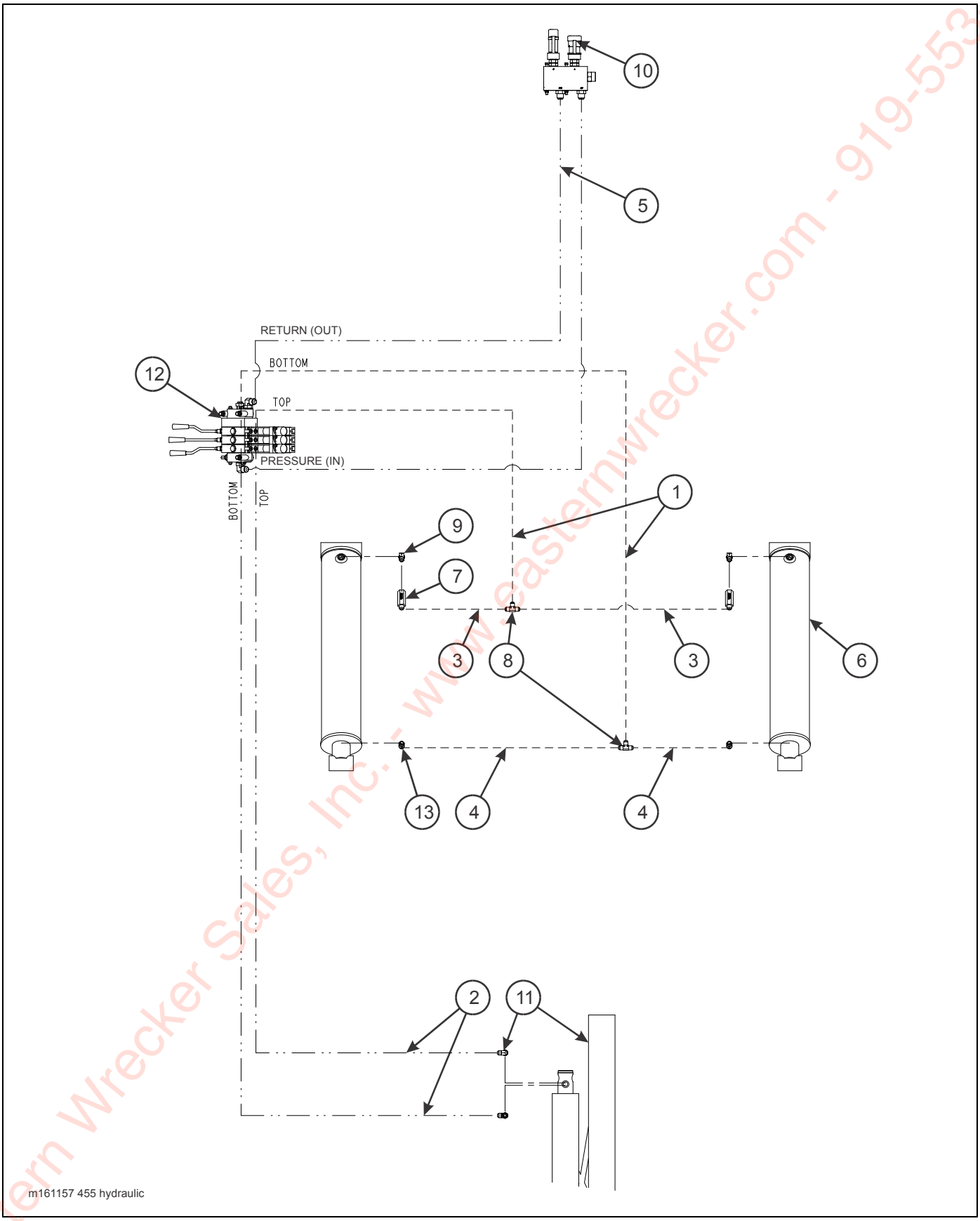

Figure 2-10: Hydraulic Assembly (455)

Eastern Wrecker Sales, Inc. - www.easternwrecker.com - 919-553-4038

HYDRAULIC ASSEMBLY (455)

ITEM	PART NO.	DESCRIPTION	QTY.
	161157	HYDRAULIC ELECTRICAL AIR	REF
1	1-397-010301064	HOSE ASSEMBLY 1/2 X 64	2
	1-397-010301070	HOSE ASSEMBLY 1/2 X 70	2
	1-397-010301074	HOSE ASSEMBLY 1/2 X 74	2
	139936	HOSE ASSEMBLY ARCTIC 1/2 X 64	2
	168544	HOSE ASSEMBLY ARCTIC 1/2 X 74	2
2	1-397-010301160	HOSE ASSEMBLY 1/2 X 160	2
	1-397-010301164	HOSE ASSEMBLY 1/2 X 164	2
	1-397-010301170	HOSE ASSEMBLY 1/2 X 170	2
	139927	HOSE ASSEMBLY ARCTIC 1/2 X 170	2
	163361	HOSE ASSEMBLY ARCTIC 1/2 X 160	2
3	1-397-010302042	HOSE ASSEMBLY 1/2 X 42	2
	1-397-010302050	HOSE ASSEMBLY 1/2 X50	2
	142068	HOSE ASSEMBLY 1/2 X 39	2
	163360	HOSE ASSEMBLY ARCTIC 1/2 X 39	2
	168545	HOSE ASSEMBLY ARCTIC 1/2 X50	2
4	1-397-010302084	HOSE ASSEMBLY 1/2 X 84	2
	1-397-010302087	HOSE ASSEMBLY 1/2 X 87	2
	104369	HOSE ASSEMBLY 1/2 X 96	2
	139939	HOSE ASSEMBLY ARCTIC 1/2 X 84	2
	168546	HOSE ASSEMBLY ARCTIC 1/2 X 96	2
5	1-397-010305190	HOSE ASSEMBLY 3/4 X 190 (NOT USED W/ ENGINE PACKAGE)	2
	1-397-010305216	HOSE ASSEMBLY 3/4 X 216	2
	137794	HOSE ASSEMBLY 3/4 X 196	2
	126854	HOSE ASSEMBLY ARCTIC 3/4 X 190	2
	168543	HOSE ASSEMBLY ARCTIC 3/4 X 194	2
6	3-242-010189	CYLINDER, LIFT 6 X 41 (SEE PAGE 2-33)	REF
7	3-846-010155	VALVE, RESTRICTOR, 1/16-ONE WAY	2
8	2033-8-8S	ADAPTER TEE	2
9	2062-8-8S	ADAPTER	2
10	171320	CONNECTORS, AIR/HYDRAULIC (FLOW CONTROL) (SEE PAGE 2-19)	REF
11	-----	U/C CYLINDER ASSEMBLY (SEE PAGE 2-25)	REF
12	148241	VALVE ASSEMBLY 3 SPOOL (SEE PAGE 2-21)	REF
13	202702-8-8S	ADAPTER	2

Eastern Wrecker Sales, Inc. - www.easternwrecker.com - 919-553-4038

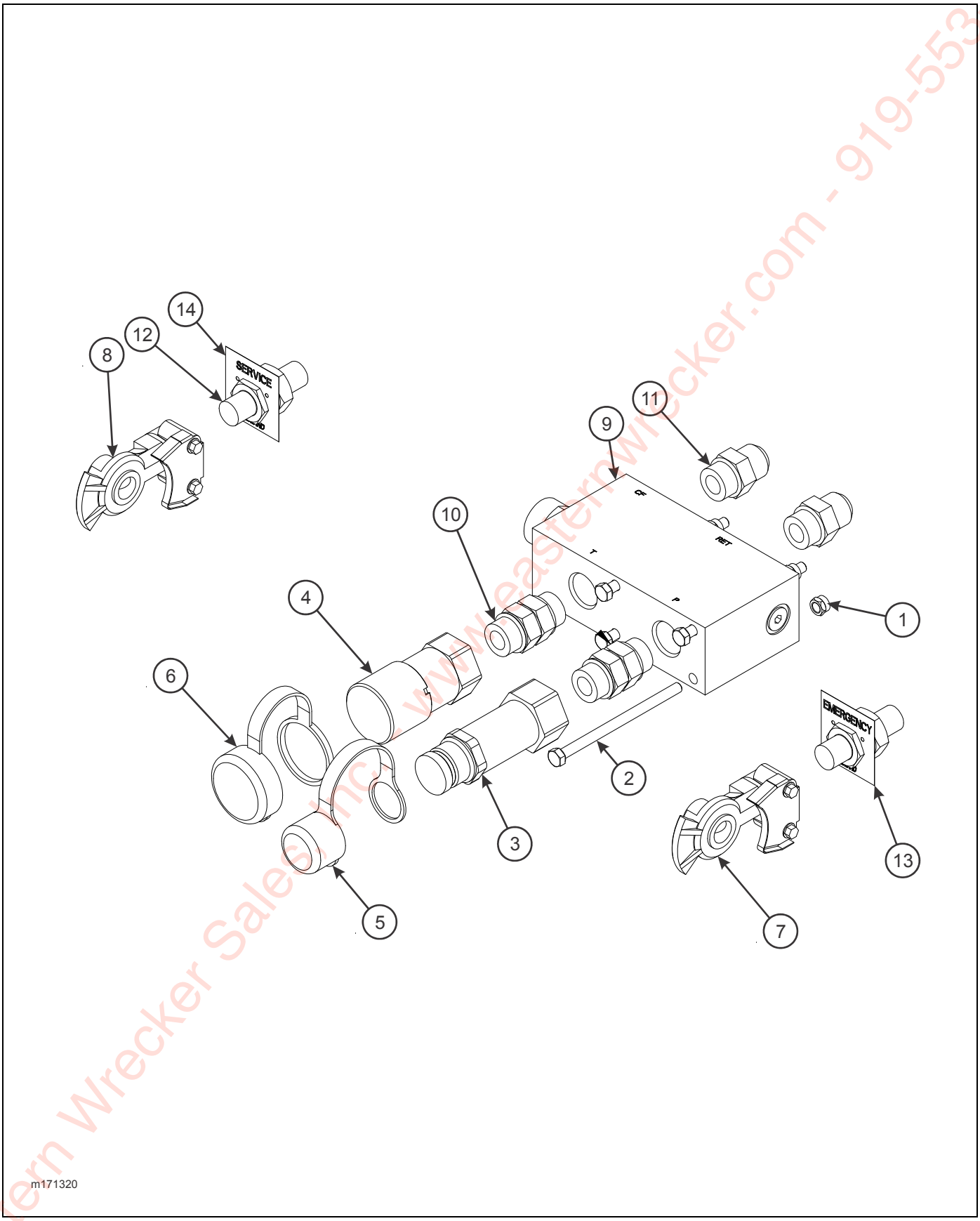

Figure 2-11: Air/Hydraulic Connectors Assembly (Flow Control)

Eastern Wrecker Sales, Inc. www.easternwrecker.com - 919-553-4038

AIR/HYDRAULIC CONNECTORS ASSEMBLY (FLOW CONTROL)

ITEM	PART NO.	DESCRIPTION	QTY.
	171320	CONNECTORS, AIR/HYDRAULIC (FLOW CONTROL)	
1	1-512-010005-03	NUT, HEX LOCK 5/16-18	2
2	1-654-010049-19	SCREW, HEX HEAD CAP 5/16-18 X 5 GR5	4
3	105479	COUPLER, FLAT FACE MALE	1
4	105480	COUPLER, FLAT FACE FEMALE	1
5	105481	COUPLER, DUST CAP MALE	1
6	105482	COUPLER, DUST CAP FEMALE	1
7	108801	GLADHAND, RED AIR	1
8	108802	GLADHAND, BLUE AIR	1
9	158580	VALVE, FLOW CONTROL 14 GPM	1
10	158581	ADAPTER, STR	2
11	202702-12-12S	ADAPTER, STR	2
12	55B61	FRAME UNION	2
13	55B61-6	TAG EMERGENCY LINE	1
14	55B61-7	TAG SERVICE LINE	1

Eastern Wrecker Sales, Inc. - www.easternwrecker.com - 919-553-4038

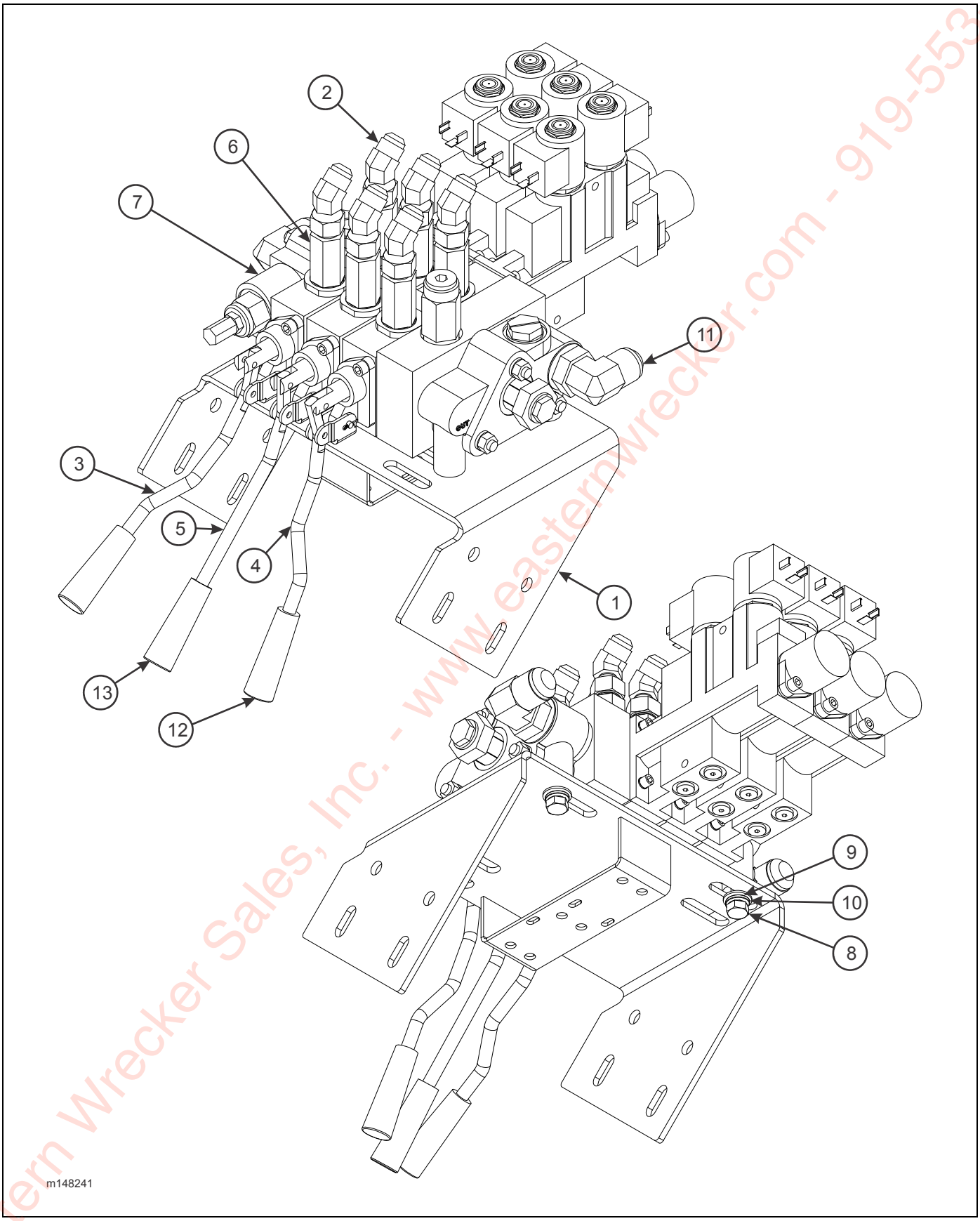

Figure 2-12: Three Spool Valve Assembly

Eastern Wrecker Sales, Inc. - www.easternwrecker.com - 919-553-4038

THREE SPOOL VALVE ASSEMBLY

ITEM	PART NO.	DESCRIPTION	QTY.
	148241	VALVE ASSEMBLY, 3 SPOOL	
1	116837	VALVE MOUNT, CONTROL	1
2	121031	ADAPTER, 45	6
3	136377	VALVE HANDLE, RH FORMED	1
4	136378	VALVE HANDLE, LH FORMED	1
5	139519	VALVE HANDLE, CENTER FORMED	1
6	140893	ADAPTER, STR	6
7	148240	VALVE, 3 STACK 2ND MOTOR SOL (SEE PAGE 2-23)	1
8	1-654-010051-05	SCREW, HEX HEAD CAP 3/8-16 X 1 GR5	3
9	1-861-010032-10	WASHER, FLAT 3/8N	3
10	1-861-010034-11	WASHER, SPLIT LOCK 3/8	3
11	2062-10-12S	ADAPTER, 90	2
12	3-360-010072	HANDLE, PLASTIC BLACK	2
13	3-360-010090	HANDLE, PLASTIC RED	1

Eastern Wrecker Sales, Inc. - www.easternwrecker.com - 919-553-4038

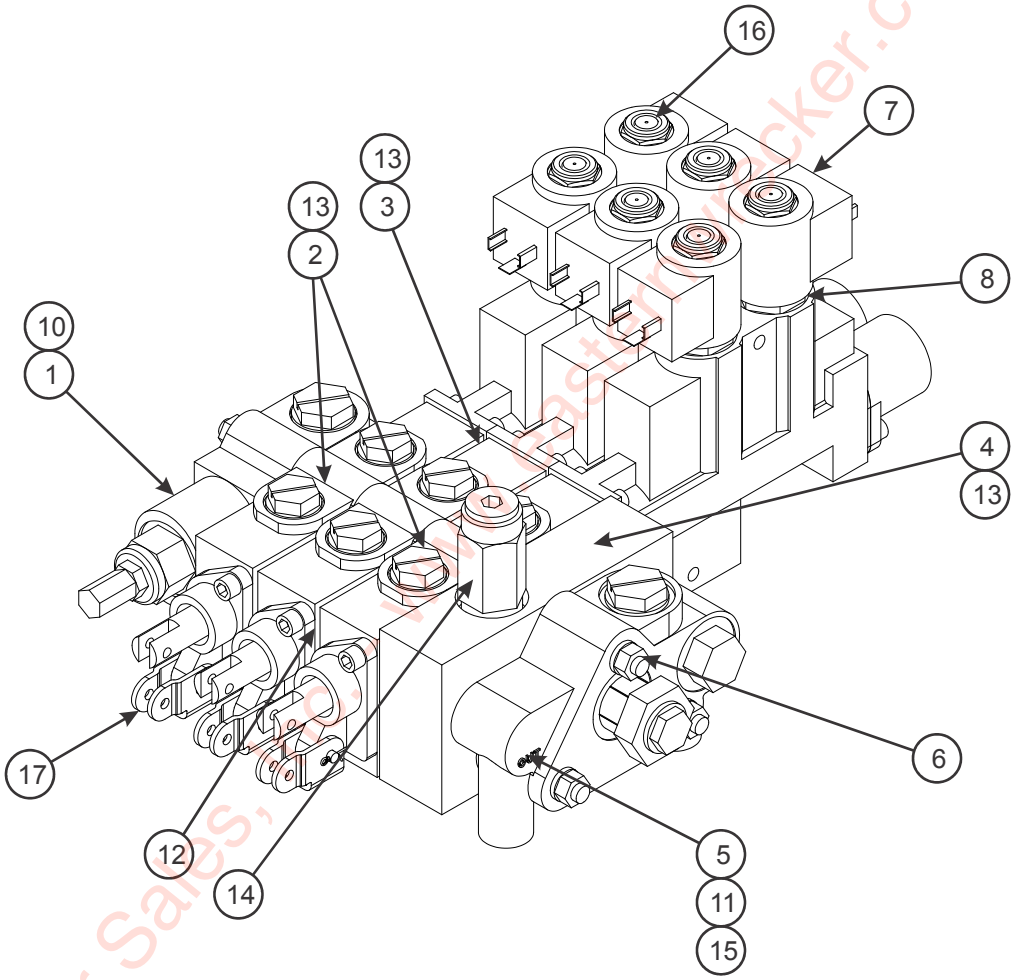

Figure 2-13: Three Stack Valve

Eastern Wrecker Sales, Inc. www.easternwrecker.com - 919-553-4038

THREE STACK VALVE

ITEM	PART NO.	DESCRIPTION	QTY.
	148240	THREE STACK VALVE	
1	149526	INLET SECTION KIT	
2	149527	VALVE SECTION KIT	
3	149528	VALVE SECTION KIT	
4	149529	VALVE SECTION KIT	
5	142483	OUTLET SECTION KIT	
6	149530	TIEROD KIT	
7	142484	COIL	
8	142485	CARTRIDGE	
9	142486	COIL CARTRIDGE ASSEMBLY (INCL ITEMS 7 & 8)	
10	660580002	SEAL KIT FOR INLET SECTION	
11	660580003	SEAL KIT FOR OUTLET SECTION	
12	660580004	O-RING SEAL KIT FOR BETWEEN SECTIONS	
13	660580005	SEAL KIT FOR SOLENOID WORK SECTION	
14	149030	PRESSURE REDUCING CARTRIDGE IN UTILITY SECTION (149529)	
15	151823	PRESSURE BUILD UP CARTRIDGE IN OUTLET SECTION (142483)	
16	143141	COIL NUT	
17	169843	PIN/CLEVIS KIT SPOOL VALVE	

Eastern Wrecker Sales, Inc. - www.easternwrecker.com - 919-553-4038

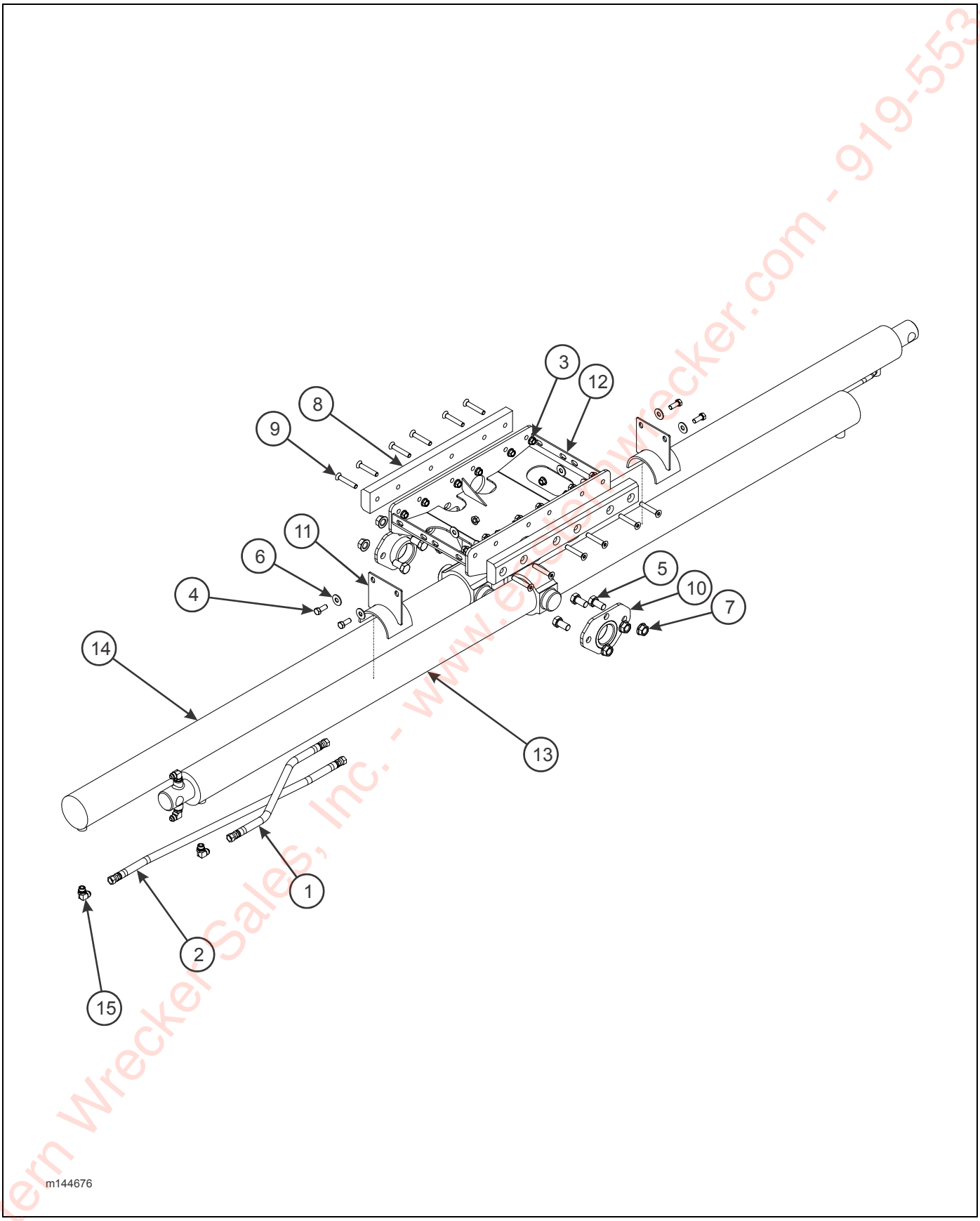

Figure 2-14: U/C Cylinder Assembly

Eastern Wrecker Sales, Inc. - www.easternwrecker.com - 919-553-4038

U/C CYLINDER ASSEMBLY

ITEM	PART NO.	DESCRIPTION	QTY.							
	144673	U/C CYL ASSEMBLY (455-50/53/55HD,440-48)	*							
	144674	U/C CYL ASSEMBLY (440-50CA)		*						
	144675	U/C CYL ASSEMBLY (440-53)			*					
	144676	U/C CYL ASSEMBLY (455-48/50CA, 425-45)				*				
	144677	U/C CYL ASSEMBLY (425-41, 440-41)					*			
	154434	U/C CYL ASSEMBLY (440-50CA HD)						*		
	170447	U/C CYL ASSEMBLY (455-48/50CA ARCTIC)							*	
	170448	U/C CYL ASSEMBLY (455-48 ARCTIC)								*
1	1-397-010301024	HOSE ASSEMBLY 1/2 X 24	--	1	1	1	1	1	--	--
	111301	HOSE ASSEMBLY 1/2 X 36	1	--	--	--	--	--	--	--
	139934	HOSE ASSEMBLY 1/2 X 24 ARCTIC	--	--	--	--	--	--	1	--
	170446	HOSE ASSEMBLY 1/2 X 36 ARCTIC	--	--	--	--	--	--	--	1
2	1-397-010301039	HOSE ASSEMBLY 1/2 X 39	--	--	--	1	--	--	--	--
	1-397-010301048	HOSE ASSEMBLY 1/2 X 48	--	1	1	--	--	--	--	--
	1-397-010301024	HOSE ASSEMBLY 1/2 X 24	--	--	--	--	1	--	--	--
	111301	HOSE ASSEMBLY 1/2 X 36	1	--	--	--	--	1	--	--
	139935	HOSE ASSEMBLY 1/2 X 39 ARCTIC	--	--	--	--	--	--	1	--
	170446	HOSE ASSEMBLY 1/2 X 36 ARCTIC	--	--	--	--	--	--	--	1
3	1-510-010003-09	NUT, FLANGE HEAD SERRATED 1/2-13	16	16	16	16	16	16	16	16
4	1-654-010055-02	SCREW, HEX HEAD CAP 1/2-13 X 1-1/4 GR5	4	4	4	4	4	4	4	4
5	1-654-010061-03	SCREW, HEX HEAD CAP 3/4-10 X 1-1/2 GR5	6	6	6	6	6	6	6	6
6	1-861-010032-15	WASHER, FLAT 1/2W	8	8	8	8	8	8	8	8
7	103841	NUT, FLANGE PREVAILING TORQUE 3/4-10	6	6	6	6	6	6	6	6
8	117386	NYLATRON SLIDE, U/C CYLINDER	2	2	2	2	2	2	2	2
9	118627	SCREW, HEX SOCKET CTSK 1/2-13 X 3	12	12	12	12	12	12	12	12
10	122621	BRACKET WELDMENT, U/C CYLINDER TRUNNION	2	2	2	2	2	2	2	2
11	142050	SADDLE WELDMENT, U/C CYLINDER TRUNNION	2	2	2	2	2	2	2	2
12	142053	MOUNT WELDMENT, CYLINDER TRUNNION	1	1	1	1	1	1	1	1
13	144662	CYLINDER, 4 X 100 PORT ROD PAINTED (STREETSIDE) (SEE PAGE 2-26)	--	--	--	1	1	1	1	--
	144666	CYLINDER, 4 X 126 PORT ROD PAINTED (STREETSIDE) (SEE PAGE 2-28)	1	1	--	--	--	--	--	1
	144670	CYLINDER, 4 X 138 PORT ROD PAINTED (STREETSIDE) (SEE PAGE 2-30)	--	--	1	--	--	--	--	--
14	144664	CYLINDER, 4 X 100 PAINTED (CURBSIDE) (SEE PAGE 2-27)	--	--	--	--	1	--	--	--
	144668	CYLINDER, 4 X 126 PAINTED (CURBSIDE) (SEE PAGE 2-29)	1	--	--	1	--	1	1	1
	144672	CYLINDER, 4 X 138 PAINTED (CURBSIDE) (SEE PAGE 2-31)	--	1	1	--	--	--	--	--
15	2062-8-8S	ADAPTER, 90	4	4	4	4	4	4	4	4

Eastern Wrecker Sales, Inc. - www.easternwrecker.com - 919-553-4038

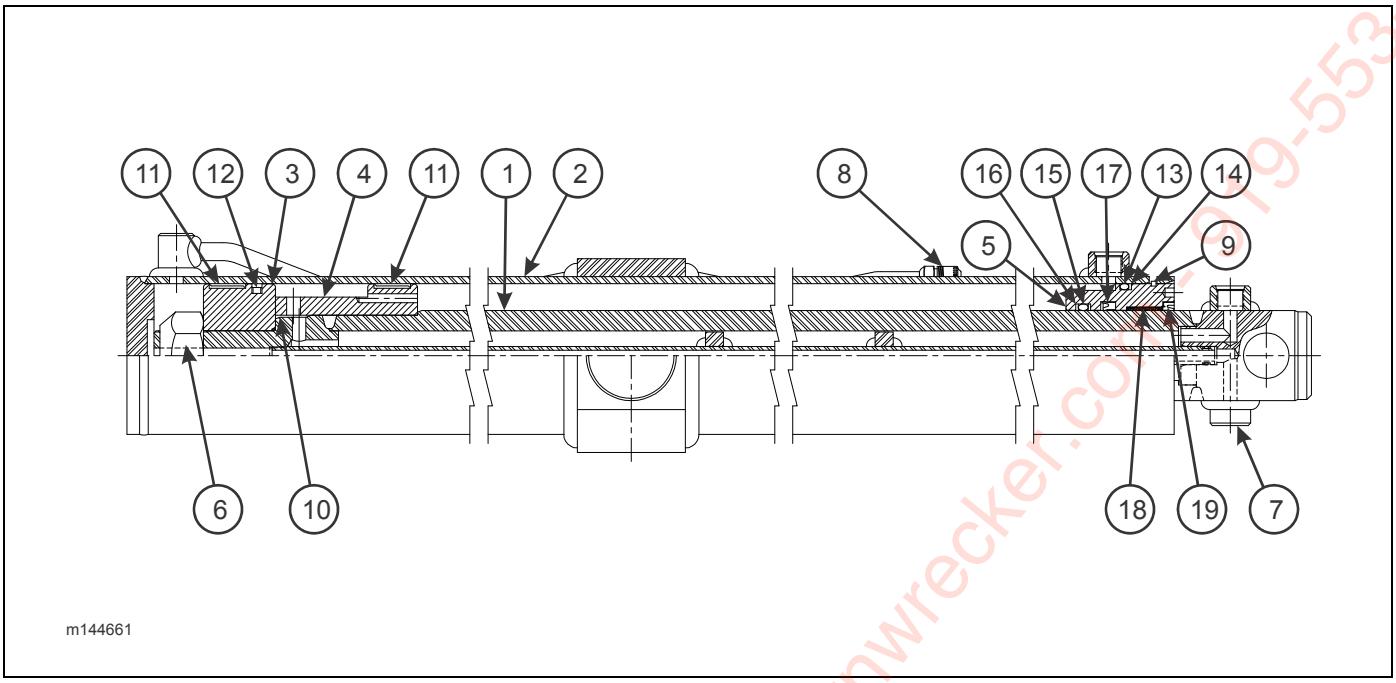

Figure 2-15: Cylinder, Hydraulic 4 x 100 Ported Rod (Streetside) (455-48/50CA, 425-41/45, 440-41)

CYLINDER, HYDRAULIC 4 X 100 PORTED ROD (STREETSIDE) (455-48/50CA, 425-41/45, 440-41)

ITEM	PART NO.	DESCRIPTION	QTY.
	144661	CYLINDER, HYDRAULIC 4 X 100 PORTED ROD	
1	146834	PISTON TUBE ASSEMBLY	1
2	-----	BUTT & TUBE ASSEMBLY	1
3	-----	PISTON	1
4	-----	PISTON	1
5	146854	GLAND	1
6	-----	LOCKNUT	1
7	-----	SHIPPING PLUG	
8	-----	JIC CAP	
9	-----	SQ RETAINING RING	
10	-----	O-RING	
11	-----	BEARING RING	
12	-----	TEFLON SEAL ASSEMBLY	
13	-----	O-RING	
14	-----	BU-WASHER	
15	-----	O-RING	
16	-----	BU-WASHER	
17	-----	U-CUP	
18	-----	DX BUSHING	
19	-----	WIPER	
20	-----	INSTALLATION RING	
	146836	PACKING KIT (CONTAINS ALL SEALS AND O-RINGS)	

Eastern Wrecker Sales, Inc. - www.easternwrecker.com - 919-553-4038

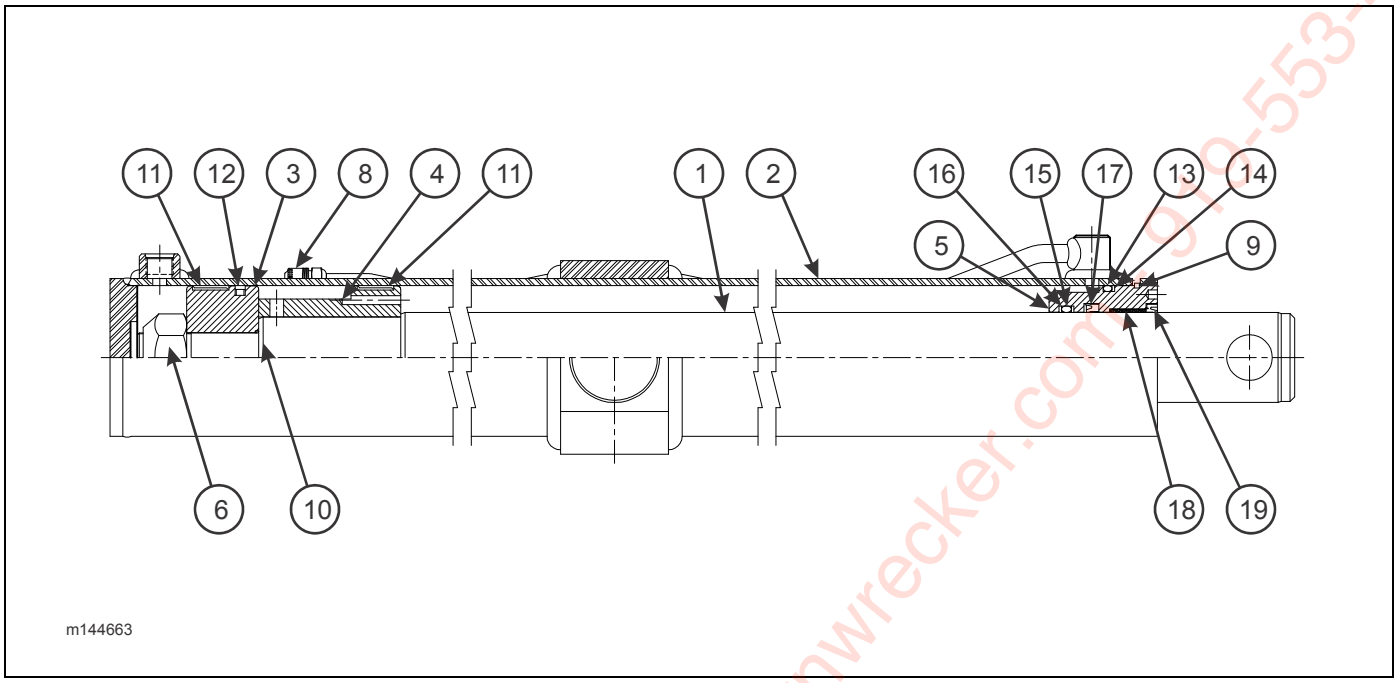

Figure 2-16: Cylinder, Hydraulic 4 x 100 (Curbside) (425-41, 440-41)

CYLINDER, HYDRAULIC 4 X 100 (CURBSIDE) (425-41, 440-41)

ITEM	PART NO.	DESCRIPTION	QTY.
	144663	CYLINDER, HYDRAULIC 4 X 100	
1	146837	PISTON TUBE ASSEMBLY	1
2	-----	BUTT & TUBE ASSEMBLY	1
3	-----	PISTON	1
4	-----	PISTON	1
5	146854	GLAND	1
6	-----	LOCKNUT	1
7	-----	SHIPPING PLUG	
8	-----	JIC CAP	
9	-----	SQ RETAINING RING	
10	-----	O-RING	
11	-----	BEARING RING	
12	-----	TEFLON SEAL ASSEMBLY	
13	-----	O-RING	
14	-----	BU-WASHER	
15	-----	O-RING	
16	-----	BU-WASHER	
17	-----	U-CUP	
18	-----	DX BUSHING	
19	-----	WIPER	
20	-----	INSTALLATION RING	
	146839	PACKING KIT (CONTAINS ALL SEALS AND O-RINGS)	

Eastern Wrecker Sales, Inc. - www.easternwrecker.com - 610-553-4038

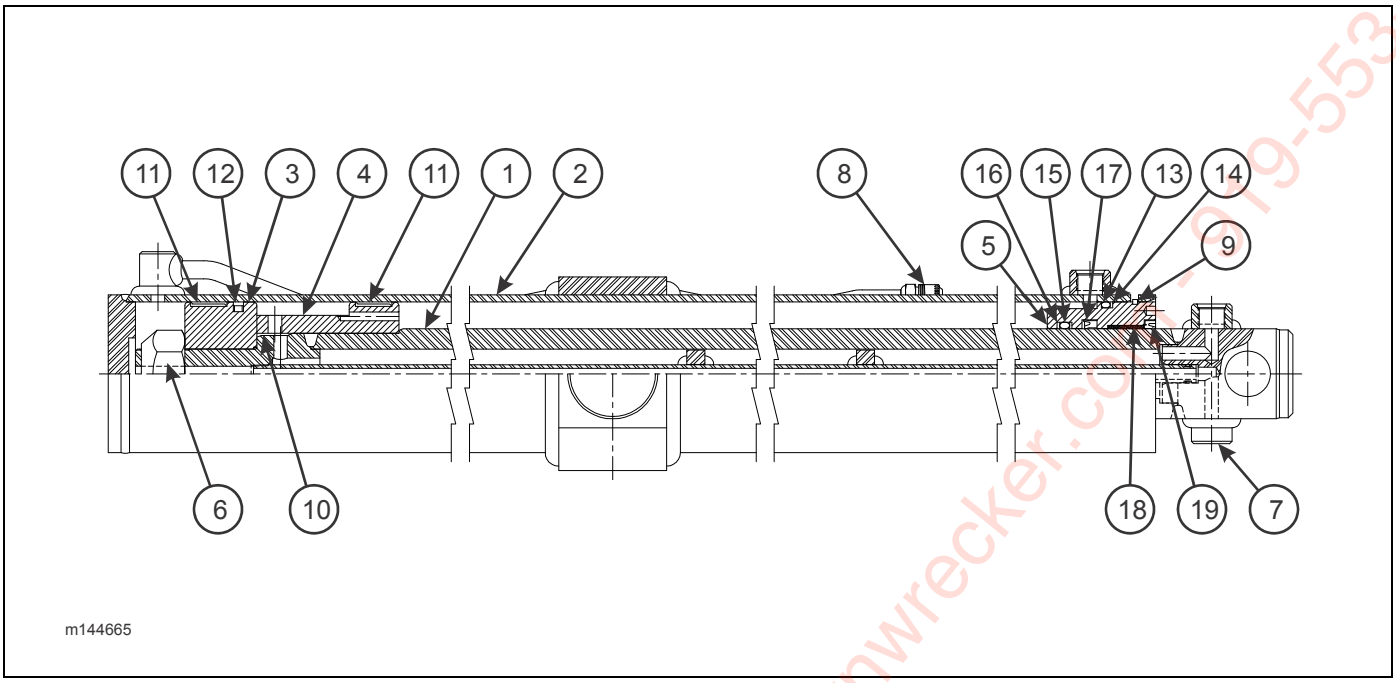

Figure 2-17: Cylinder, Hydraulic 4 x 126 Ported Rod (Streetside) (455-50/53/55HD, 440-48/50CA)

CYLINDER, HYDRAULIC 4 X 126 PORTED ROD (STREETSIDE) (455-50/53/55HD, 440-48/50CA)

ITEM	PART NO.	DESCRIPTION	QTY.
	144665	CYLINDER, HYDRAULIC 4 X 126	
1	146840	PISTON TUBE ASSEMBLY	1
2	-----	BUTT & TUBE ASSEMBLY	1
3	-----	PISTON	1
4	-----	PISTON	1
5	146854	GLAND	1
6	-----	LOCKNUT	1
7	-----	SHIPPING PLUG	
8	-----	JIC CAP	
9	-----	SQ RETAINING RING	
10	-----	O-RING	
11	-----	BEARING RING	
12	-----	TEFLON SEAL ASSEMBLY	
13	-----	O-RING	
14	-----	BU-WASHER	
15	-----	O-RING	
16	-----	BU-WASHER	
17	-----	U-CUP	
18	-----	DX BUSHING	
19	-----	WIPER	
20	-----	INSTALLATION RING	
	146842	PACKING KIT (CONTAINS ALL SEALS AND O-RINGS)	

Eastern Wrecker Sales, Inc. - www.easternwrecker.com - 919-553-4038

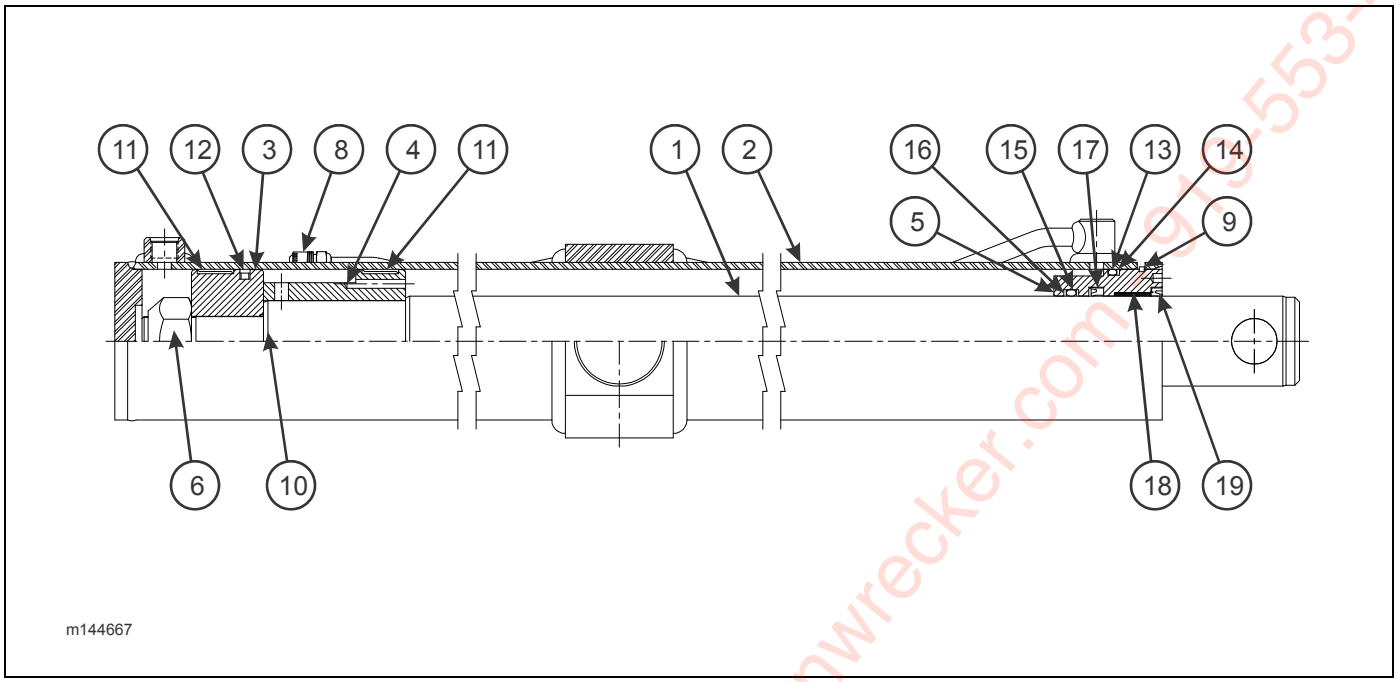

Figure 2-18: Cylinder, Hydraulic 4 x 126 (Curbside)
(455-50/53/55HD, 440-48/50CA)

CYLINDER, HYDRAULIC 4 X 126 (CURBSIDE) (455-50/53/55HD, 455-48/50CA, 425-45, 440-48)

ITEM	PART NO.	DESCRIPTION	QTY.
	144667	CYLINDER, HYDRAULIC 4 X 126	
1	146843	PISTON TUBE ASSEMBLY	1
2	-----	BUTT & TUBE ASSEMBLY	1
3	-----	PISTON	1
4	-----	PISTON	1
5	146854	GLAND	1
6	-----	LOCKNUT	1
7	-----	SHIPPING PLUG	
8	-----	JIC CAP	
9	-----	SQ RETAINING RING	
10	-----	O-RING	
11	-----	BEARING RING	
12	-----	TEFLON SEAL ASSEMBLY	
13	-----	O-RING	
14	-----	BU-WASHER	
15	-----	O-RING	
16	-----	BU-WASHER	
17	-----	U-CUP	
18	-----	DX BUSHING	
19	-----	WIPER	
20	-----	INSTALLATION RING	
	146845	PACKING KIT (CONTAINS ALL SEALS AND O-RINGS)	

Eastern Wrecker Sales, Inc. - www.easternwrecker.com - 919-553-4038

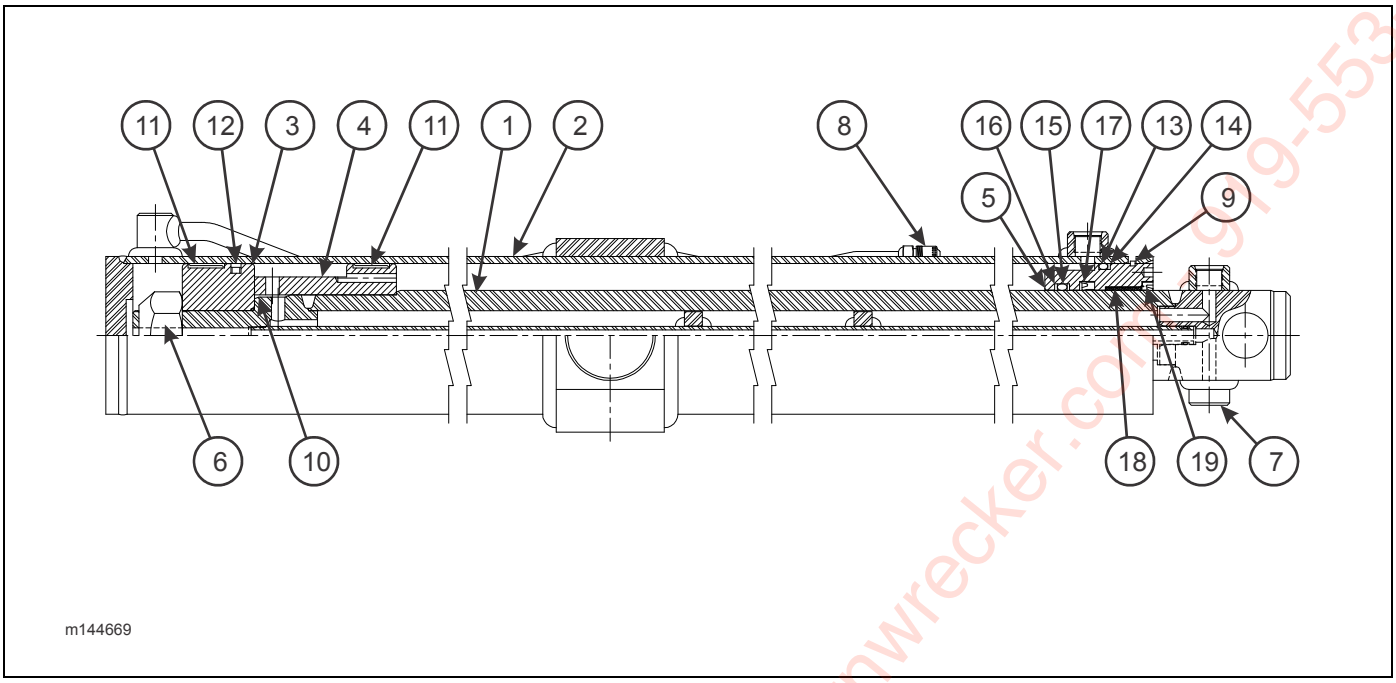

Figure 2-19: Cylinder, Hydraulic 4 x 138 Ported Rod (Streetside) (440-53)

CYLINDER, HYDRAULIC 4 X 138 PORTED ROD (STREETSIDE) (440-53)

ITEM	PART NO.	DESCRIPTION	QTY.
	144669	CYLINDER, HYDRAULIC 4 X 138 PORTED ROD	
1	146846	PISTON TUBE ASSEMBLY	
2	-----	BUTT & TUBE ASSEMBLY	
3	-----	PISTON	
4	-----	PISTON	
5	146854	GLAND	
6	-----	LOCKNUT	
7	-----	SHIPPING PLUG	
8	-----	JIC CAP	
9	-----	SQ RETAINING RING	
10	-----	O-RING	
11	-----	BEARING RING	
12	-----	TEFLON SEAL ASSEMBLY	
13	-----	O-RING	
14	-----	BU-WASHER	
15	-----	O-RING	
16	-----	BU-WASHER	
17	-----	U-CUP	
18	-----	DX BUSHING	
19	-----	WIPER	
20	-----	INSTALLATION RING	
	146848	PACKING KIT (CONTAINS ALL SEALS AND O-RINGS)	

Eastern Wrecker Sales, Inc. - www.easternwrecker.com - 919-553-4038

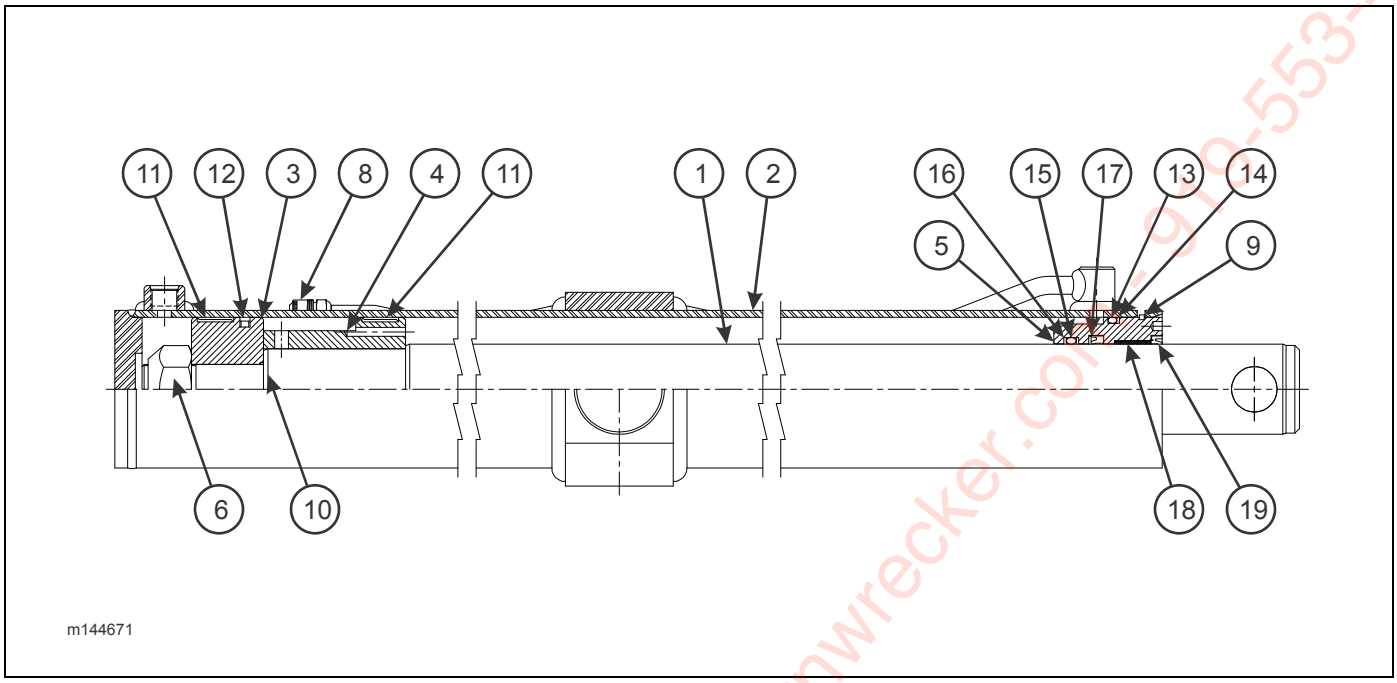

Figure 2-20: Cylinder, Hydraulic 4 x 138 (Curbside) (440-53)

CYLINDER, HYDRAULIC 4 X 138 (CURBSIDE) (440-50CA/53)

ITEM	PART NO.	DESCRIPTION	QTY.
	144671	CYLINDER, HYDRAULIC 4 X 138	
1	146849	PISTON TUBE ASSEMBLY	1
2	-----	BUTT & TUBE ASSEMBLY	1
3	-----	PISTON	1
4	-----	PISTON	1
5	146854	GLAND	1
6	-----	LOCKNUT	1
7	-----	SHIPPING PLUG	
8	-----	JIC CAP	
9	-----	SQ RETAINING RING	
10	-----	O-RING	
11	-----	BEARING RING	
12	-----	TEFLON SEAL ASSEMBLY	
13	-----	O-RING	
14	-----	BU-WASHER	
15	-----	O-RING	
16	-----	BU-WASHER	
17	-----	U-CUP	
18	-----	DX BUSHING	
19	-----	WIPER	
20	-----	INSTALLATION RING	
	146851	PACKING KIT (CONTAINS ALL SEALS AND O-RINGS)	

Eastern Wrecker Sales, Inc. - www.easternwrecker.com - 610-553-4038

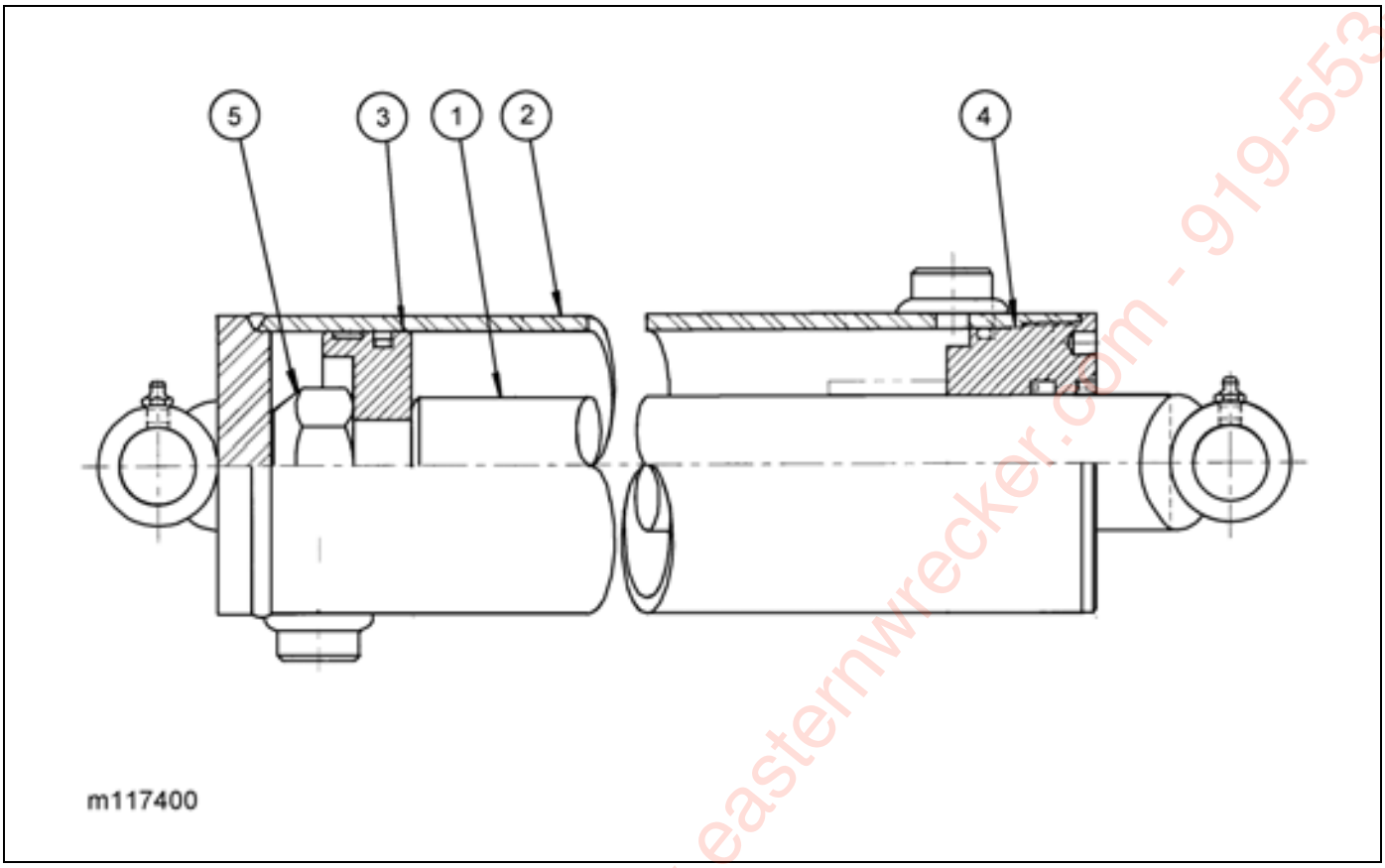

Figure 2-21: Cylinder, Hydraulic 4-1/2 X 30 (425)

CYLINDER 4-1/2 X 30 (425)

ITEM	PART NO.	DESCRIPTION	QTY.
	117400	CYLINDER HYDRAULIC 4-1/2 X 30	1
1	125192	PISTON ROD ASSEMBLY	1
2	-----	BUTT AND TUBE ASSEMBLY	1
3	-----	PISTON	1
4	125194	GLAND	1
5	-----	LOCKNUT 1-1/2-12	
	125196	PACKING KIT (CONTAINS ALL SEALS AND O-RINGS)	

Eastern Wrecker Sales, Inc. www.easternwrecker.com - 919-553-4038

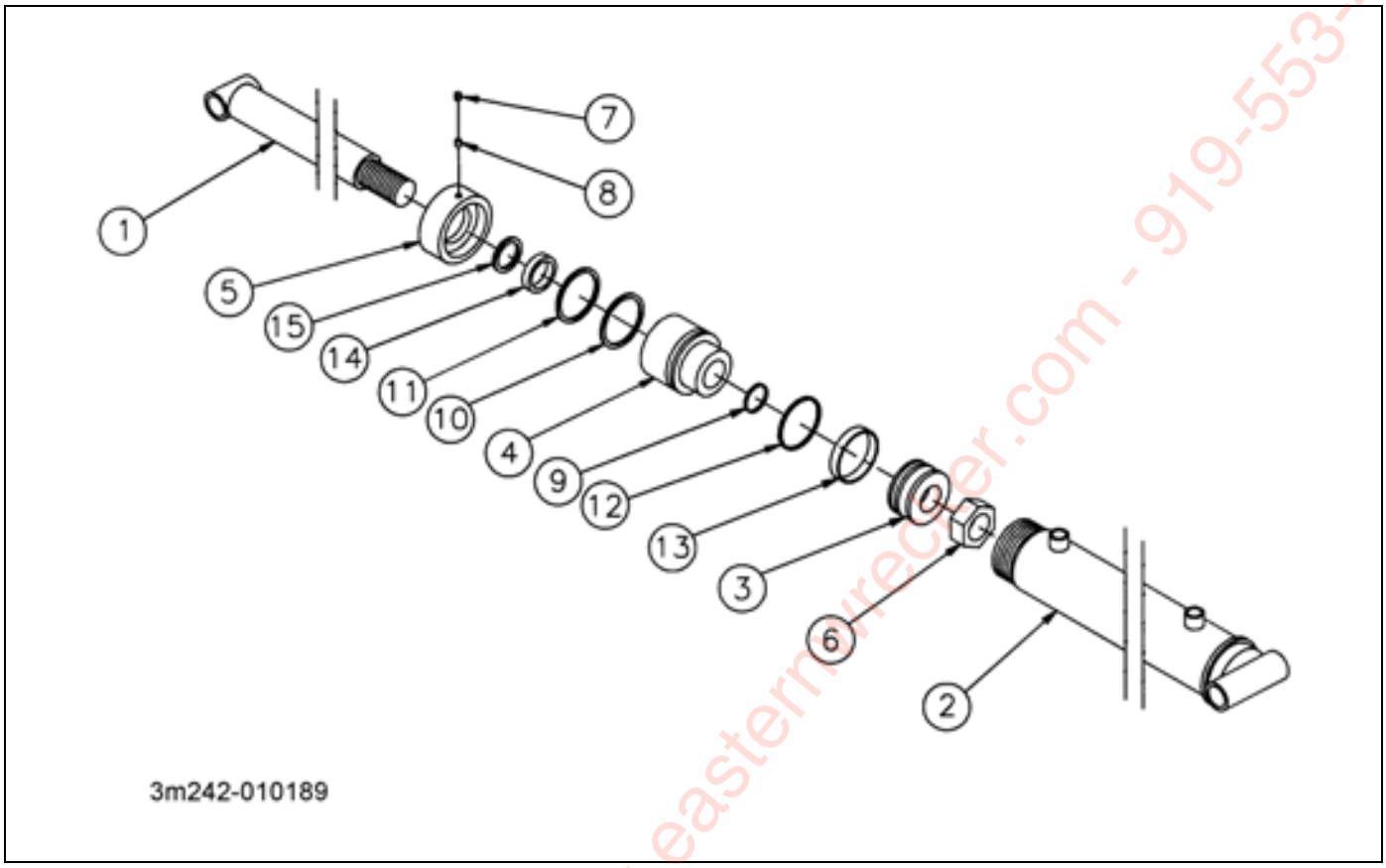

Figure 2-22: Cylinder, Hydraulic 6 X 41 (440 & 455)

CYLINDER 6" X 41" (440 & 455)

ITEM	PART NO.	DESCRIPTION	QTY.
	3-242-010189	CYLINDER HYDRAULIC 6" X 41" (PRINCE PMC-22030)	
1	140319	PISTON ROD ASSEMBLY	1
2	-----	BUTT AND TUBE ASSEMBLY	1
3	-----	PISTON	1
4	167691	GLAND	1
5	-----	GLAND CUP	1
6	-----	NUT, LOCK	1
7	-----	SET SCREW	1
8	-----	NYLON LOCK	1
9*	-----	O-RING	1
10*	-----	O-RING	1
11*	-----	BU-WASHER	1
12*	-----	CROWN SEAL	1
13*	-----	BEARING RING	1
14*	-----	U-CUP	1
15*	-----	WIPER	1
	PMCK-22000	PACKING KIT (CONTAINS ITEMS 9 THROUGH 15)	

* PARTS AVAILABLE IN PACKING KIT ONLY.
NOTE: CYL. HAD 3/4 NPTF PORTS PRIOR 05/30/03; HAS 1/2 SAE O-RING PORTS AFTER 05/30/03

Eastern Wrecker Sales, Inc. - www.easternwrecker.com - 919-553-4038

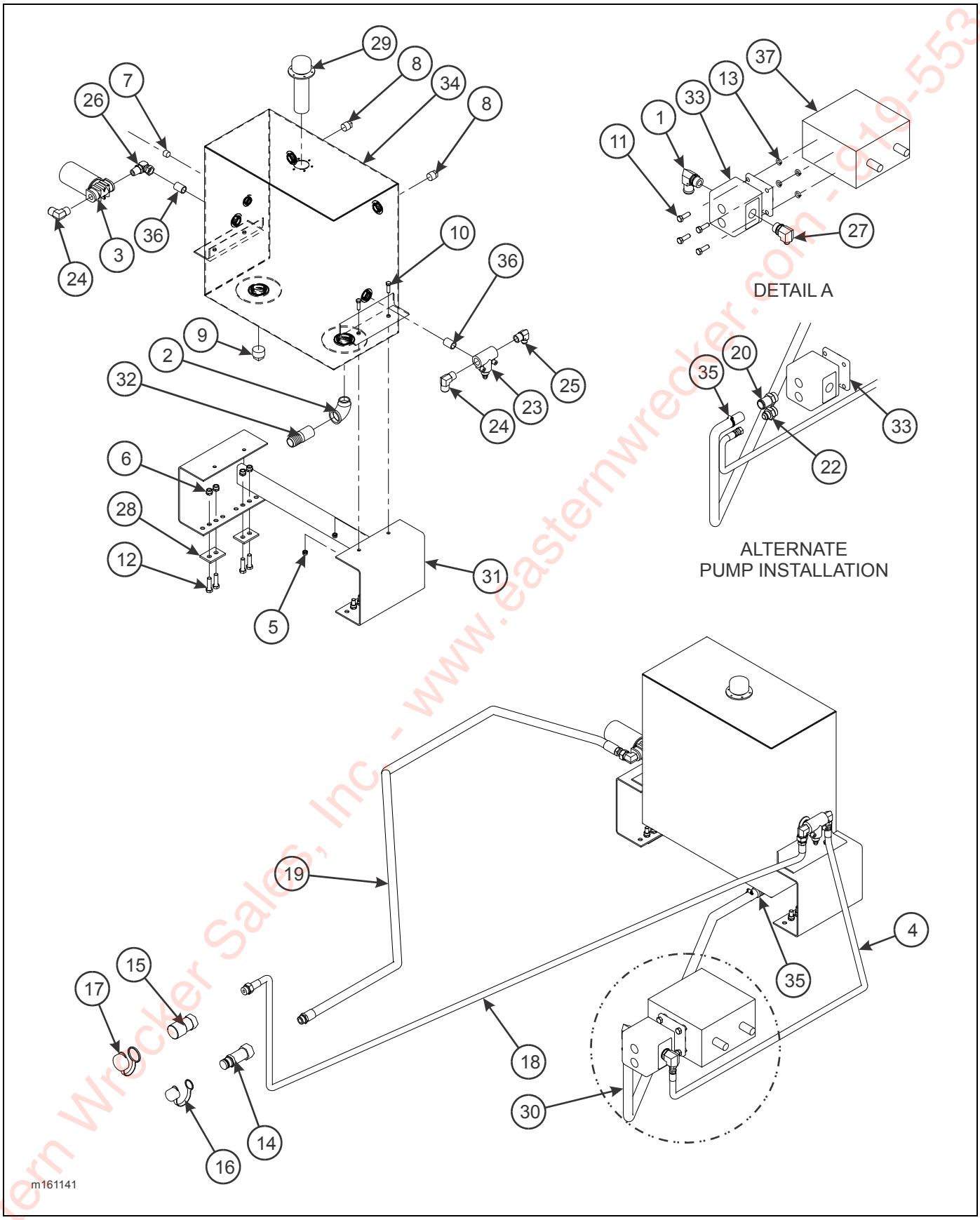

Figure 2-23: 30 Gallon Hydraulic Wet Kit Items

Eastern Wrecker Sales, Inc. - www.easternwrecker.com - 919-553-4038

30 GALLON HYDRAULIC WET KIT (OPTION)

ITEM	PART NO.	DESCRIPTION	QTY.
	107498	HYDRAULIC WET KIT W/ PTO INSTALLED	
	107499	HYDRAULIC WET KIT W/ PTO NOT INSTALLED	
	107500	HYDRAULIC WET KIT W/O PTO NOT INSTALLED	
1	1-007-010006	ELBOW 90, 1-5/16 O-RING 1-1/4 HOSE	1
2	1-1/4ST ELL	BLACK PIPE ELBOW 90 ST	1
3	1-295-010001	FILTER, RETURN	1
	1-295-010002	FILTER ELEMENT	1
4	1-397-010301100	HOSE ASSEMBLY 1/2 X 100	1
5	1-512-010005-05	NUT, HEX LOCK 3/8-16 GRB	4
6	1-512-010005-09	NUT, HEX LOCK 1/2-13 GRB	8
7	1-560-010002-04	PIPE PLUG 1/2	1
8	1-560-010002-05	PIPE PLUG 3/4	2
9	1-560-010002-07	PLUG, BLACK PIPE 1-1/4 SQ HEAD	1
10	1-654-010051-06	SCREW, HEX HEAD CAP 3/8-16 X 1-1/4 GR5	4
11	1-654-010055-03	SCREW, HEX HEAD CAP 1/2-13 X 1-1/2 GR5	4
12	1-654-010055-04	SCREW, HEX HEAD CAP 1/2-13 X 1-3/4 GR5	8
13	1-861-010034-13	WASHER, SPLIT LOCK 1/2	4
14	105479	COUPLER, FLAT FACE MALE NOSE	1
15	105480	COUPLER, FLAT FACE FEMALE BODY	1
16	105481	COUPLER, DUST CAP MALE	1
17	105482	COUPLER, DUST CAP FEMALE	1
18	106759	HOSE ASSEMBLY 1/2 X 164	1
19	106760	HOSE ASSEMBLY 3/4 X 164	1
20	107513	ADAPTER	1
22	12-16 070120	ADAPTER	1
23	125130	RD12D HYDRAULIC BY PASS SRDD	1
24	2024-12-12S	ADAPTER, 90	2
25	2024-12-8S	ADAPTER, 90	1
26	2047-12-12S	ELBOW, 90 SWIVEL	1
27	2062-16-8S	ADAPTER, 90	1
28	3-120-010461	BRACKET, HYDRAULIC TANK MOUNT SUPPORT	4
29	3-162-010001	FILLER-BREATHER-STRAINER ASSEMBLY	1
30	3-399-010001	HOSE, 1-1/4 SUCTION	8’
31	3-482-010503	TANK MOUNT	1
32	3-561-010001	HOSE BARB 1-1/4	1
33	3-591-010001	HYDRAULIC GEAR PUMP	1
34	3-786-010043	TANK, HYDRAULIC	1
35	6828	IDEAL HOSE CLAMP	2
36	C3069X12	NIPPLE, HEX	2
37	PTO	POWER TAKE OFF	*1,0

* FIRST QUANTITY LISTED IS FOR P/N’S 107498 AND 107499 HYDRAULIC WET KIT W/ PTO; SECOND QUANTITY LISTED IS FOR P/N 107500 HYDRAULIC WET KIT W/O PTO.

Eastern Wrecker Sales, Inc. www.easternwrecker.com - 919-553-4038

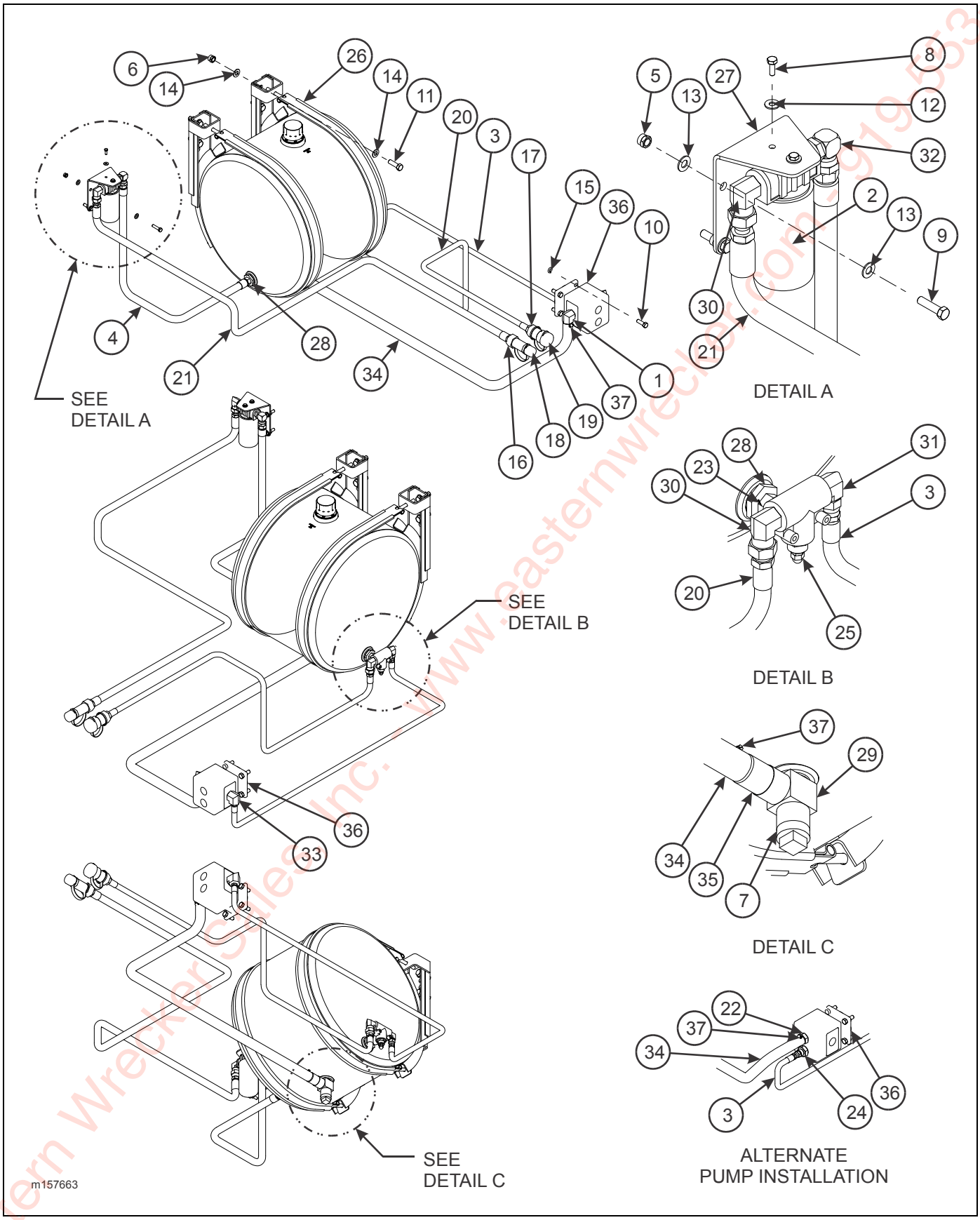

Figure 2-24: 35 Gallon Aluminum Wet Kit Items

Eastern Wrecker Sales Inc. www.easternwrecker.com 919-553-4038

35 GALLON ALUMINUM HYDRAULIC WET KIT (OPTION)

ITEM	PART NO.	DESCRIPTION	QTY.
	157663	HYDRAULIC WET KIT, 35 GALLON ALUM	
1	1-007-010006	ELBOW 90, 1-5/16 O-RING 1-1/4 HOSE	1
2	1-295-010001	FILTER, RETURN	1
	1-295-010002	FILTER ELEMENT	1
3	1-397-010301100	HOSE ASSEMBLY 1/2 X 100	1
4	1-397-010313021	HOSE ASSEMBLY 3/4 X 21	1
5	1-512-010005-05	NUT, HEX LOCK 3/8-16 GRB	4
6	1-512-010005-13	NUT, HEX LOCK 5/8-11 GRB	8
7	1-560-010002-07	PLUG, BLACK PIPE 1-1/4 SQ HEAD	1
8	1-654-010047-04	SCREW, HEX HEAD CAP 1/4-20 X 3/4 GR5	2
9	1-654-010051-07	SCREW, HEX HEAD CAP 3/8-16 X 1-1/2 GR5	4
10	1-654-010055-03	SCREW, HEX HEAD CAP 1/2-13 X 1-1/2 GR5	4
11	1-654-010059-05	SCREW, HEX HEAD CAP 5/8-11 X 2 GR5	8
12	1-861-010032-07	WASHER, FLAT 1/4W	2
13	1-861-010032-10	WASHER, FLAT 3/8N	8
14	1-861-010032-18	WASHER, FLAT 5/8N	8
15	1-861-010034-13	WASHER, SPLIT LOCK 1/2	4
16	105479	COUPLER, FLAT FACE MALE NOSE	1
17	105480	COUPLER, FLAT FACE FEMALE BODY	1
18	105481	COUPLER, DUST CAP MALE	1
19	105482	COUPLER, DUST CAP FEMALE	1
20	106759	HOSE ASSEMBLY 1/2 X 164	1
21	106760	HOSE 3/4 X 164	1
22	107513	ADAPTER	1
23	118-2658-10	NIPPLE HEX 1/2 X 1/2	1
24	12-16 070120	ADAPTER	1
25	125130	RD12D HYDRAULIC BY PASS SRDD	1
26	157662	ALUMINUM HYDRAULIC OIL TANK	1
27	157664	HYDRAULIC FILTER BRACKET	1
28	20-12 140140	REDUCER, STR	2
29	20-20-20 140424	TEE	1
30	2024-12-12S	ADAPTER, 90	2
31	2024-12-8S	ADAPTER, 90	1
32	2047-12-12S	ELBOW, 90 SWIVEL	1
33	2062-16-8S	ADAPTER, 90	1
34	3-399-010001	HOSE, 1-1/4 SUCTION	8’
35	3-561-010001	HOSE BARB 1-1/4	1
36	3-591-010001	HYDRAULIC GEAR PUMP	1
37	6828	IDEAL HOSE CLAMP	2

Eastern Wrecker Sales, Inc. - www.easternwrecker.com - 919-553-4038

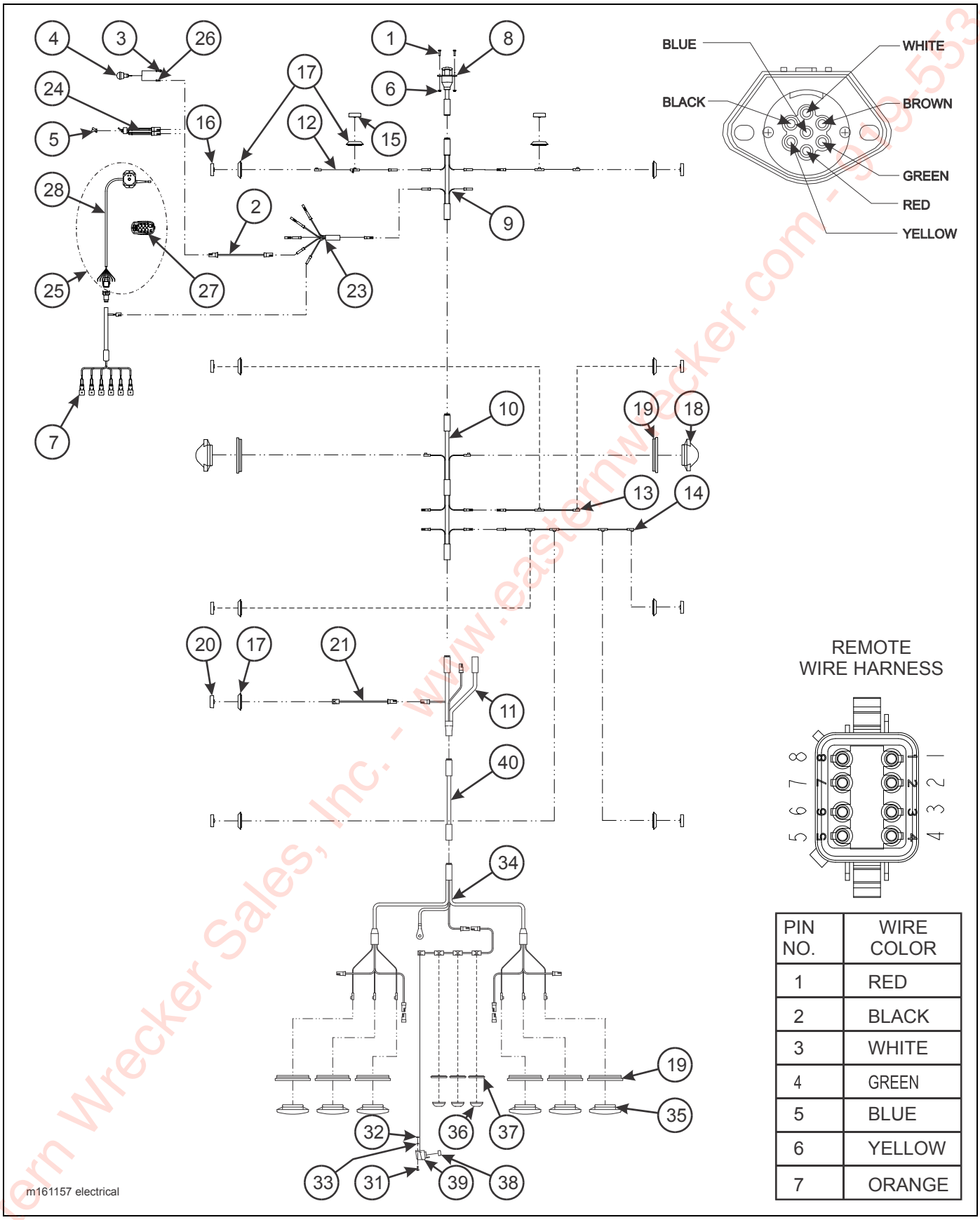

PIN NO.	WIRE COLOR
1	RED
2	BLACK
3	WHITE
4	GREEN
5	BLUE
6	YELLOW
7	ORANGE

Figure 2-25: Electrical System

Eastern Wrecker Sales, Inc. - www.easternwrecker.com - 919-553-4038

ELECTRICAL SYSTEM

ITEM	PART NO.	DESCRIPTION	QTY.	
	161157	HYDRAULIC ELECTRICAL AIR	REF	
	150182	SUSPENSION		REF
1	1-654-010047-06	SCREW, HEX HEAD CAP 1/4-20 X 1 GR5	2	--
2	3-368-010252	HARNESS ASSEMBLY, BULKHEAD LIGHT EXT	1	--
3	239-3646-5	TERMINAL	1	--
4	26331	LIGHT, PANEL	1	--
5	81264	RUBBER BOOT FOR ELECT SWITCH	1	--
6	108417	NUT, HEX FLANGE SPIRAL 1/4-20	2	--
7	140083	HARNESS ASSEMBLY, KAR-TECH	1	--
8	143100	HARNESS, 7 WAY RECEPTACLE	1	--
9	143101	HARNESS, FRONT MAIN	1	--
10	143102	HARNESS, BED MAIN	1	--
11	143103	HARNESS, E-CHAIN	REF	1
12	143105	HARNESS, MARKER FRONT CORNER	2	--
13	143106	HARNESS, MARKER FRONT BED	1	--
14	143107	HARNESS, MARKER REAR BED	1	--
15	143108	LIGHT, RED LED 2.5 CL/MARKER	2	--
	171303	LIGHT, RED CLEAR LENS, 2.5 GRT **(ANNIVERSERY EDITION)**	2	--
16	143109	LIGHT, YELLOW LED 2.5 CL/MARKER	8	--
	171302	LIGHT, YELLOW CLEAR LENS, 2.5 GRT **(ANNIVERSERY EDITION)**	8	--
	171305	LIGHT, S/T/T YELLOW CLEAR LENS GRT **(ANNIVERSERY EDITION)**	2	--
17	143110	GROMMET, 2.5 SURFACE MOUNT	11	--
18	169410	LIGHT, YELLOW AUXILIARY TURN	2	--
19	143114	GROMMET, OVAL	2	6
20	143119	LIGHT, YELLOW LED ABS	1	--
21	143120	HARNESS, ABS LAMP	1	--
22	143122	CLAMP, HARNESS (NOT SHOWN)	3	--
23	150093	HARNESS, 5 AUXILIARY BRANCHES	1	--
24	150117	TOGGLE SWITCH SEALED SPST	1	--
25	168648	REMOTE, KAR-TECH SLIDE AX (INCL. ITEMS 27-30)	1	--
26	STP-147	TERMINAL BULLET ELECTRICAL	1	--
27	168975	MACRO TRANSMITTER W/ DECAL	1	--
28	175583	MINI AND MACRO RECEIVER ASSY, 6 FUNCTION W/ TEACH BUTTON	1	--
29	168976	CAR CHARGER 12V TO MICRO USB (NOT SHOWN)	1	--
30	168982	WALL CHARGER 120V TO MICRO USB (NOT SHOWN)	1	--
31	1-512-010007-03	NUT, HEX LOCK 10-24	--	2
32	1-656-010003051	SCREW, RD HEAD SQ NECK 10-24 X 3/4	--	2
33	1-861-010034-07	WASHER, FLAT #10	--	2
34	143104	HARNESS, BUMPER	--	1
35	143113	LIGHT, RED LED OVAL STT	--	6
	179902	LIGHT, S/T/T RED CLEAR LENS GRT **(ANNIVERSERY EDITION)**	--	6
36	143115	LIGHT, RED LED RECTANGLE CLEARANCE	--	3
	171925	LIGHT, RED CLEAR LENS, MICRO CL **(ANNIVERSERY EDITION)**	--	3
37	143116	GROMMET, RECTANGLE	--	3
38	143117	LIGHT, CLEAR LED LICENSE	--	1
39	143118	BRACKET, LIGHT LICENSE	--	1
40	143166	HARNESS, EXT 48”	--	REF
41	197460	REPLACEMENT BATTERY, KAR-TECH MACRO **(NOT SHOWN)**	1	1

Eastern Wrecker Sales, Inc. - www.easternwrecker.com - 919-553-4038

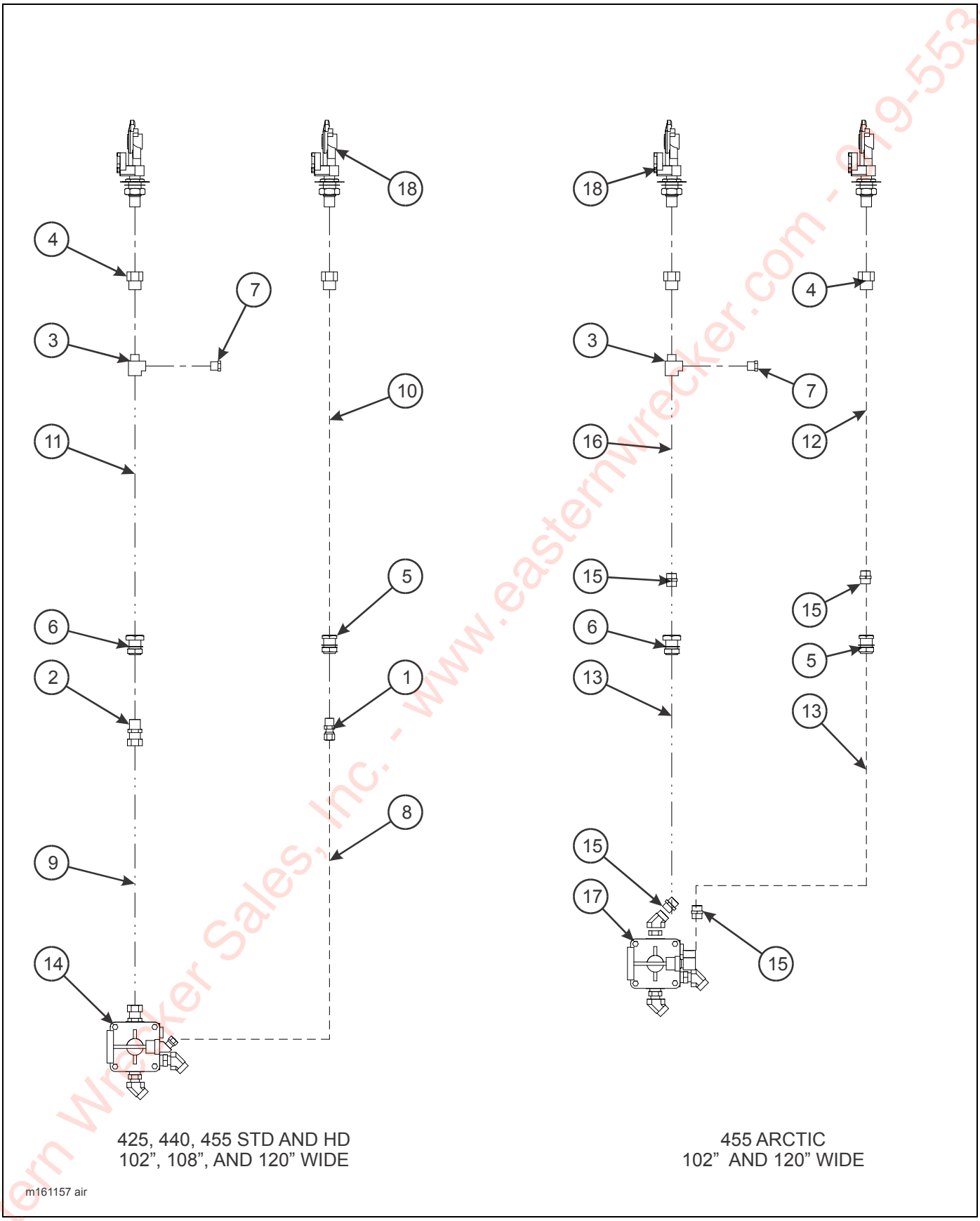

Figure 2-26: Air System, ABS

Eastern Wrecker Sales, Inc. - www.easternwrecker.com - 919-553-4038

AIR SYSTEM, ABS

ITEM	PART NO.	DESCRIPTION	QTY.
	161157	HYDRAULIC ELECTRICAL AIR	REF
1	1-297-010007-12	FITTING, AIR	1
2	1-297-010007-16	FITTING, AIR	2
3	1-297-010018-03	FITTING, BRASS PIPE STR TEE 3/8	1
4	1-297-010021-05	FITTING, BRS PIPE, COUPLING	2
5	1-297-010022-03	FITTING, AIR	1
6	1-297-010022-04	FITTING, AIR	1
7	1-297-010033-03	PLUG, BRASS 3/8	1
8	1-833-010002	TUBING NYLON 3/8	AR
9	1-833-010003	TUBING NYLON 1/2	AR
10	109209	HOSE, AIR 3/8 X 244	1
	100949	HOSE, AIR 3/8 X 222	1
11	149051	HOSE, AIR 1/2 X 264	1
	122557	HOSE, AIR 1/2 X 240	1
12	126716	HOSE, AIR 3/8 X 222 ARCTIC	2
13	139944	HOSE, AIR 3/8 X 200 ARCTIC	1
	169635	HOSE, AIR 3/8 X 248 ARCTIC	1
14	141607	AIR BOOSTER VALVE ASSEMBLY (INCL ITEMS 2-3, 10, 17-19)	1
15	2045-6-6S	ADAPTER, SWIVEL	4
16	163359	HOSE, AIR 1/2 X 240 ARCTIC	1
17	163363	VALVE ASSEMBLY, AIR BOOSTER ARCTIC (SEE PAGE 2-45)	1
18	171320	CONNECTORS, AIR/HYDRAULIC (FLOW CONTROL) (SEE PAGE 2-19)	1

Eastern Wrecker Sales, Inc. - www.easternwrecker.com - 919-553-4038

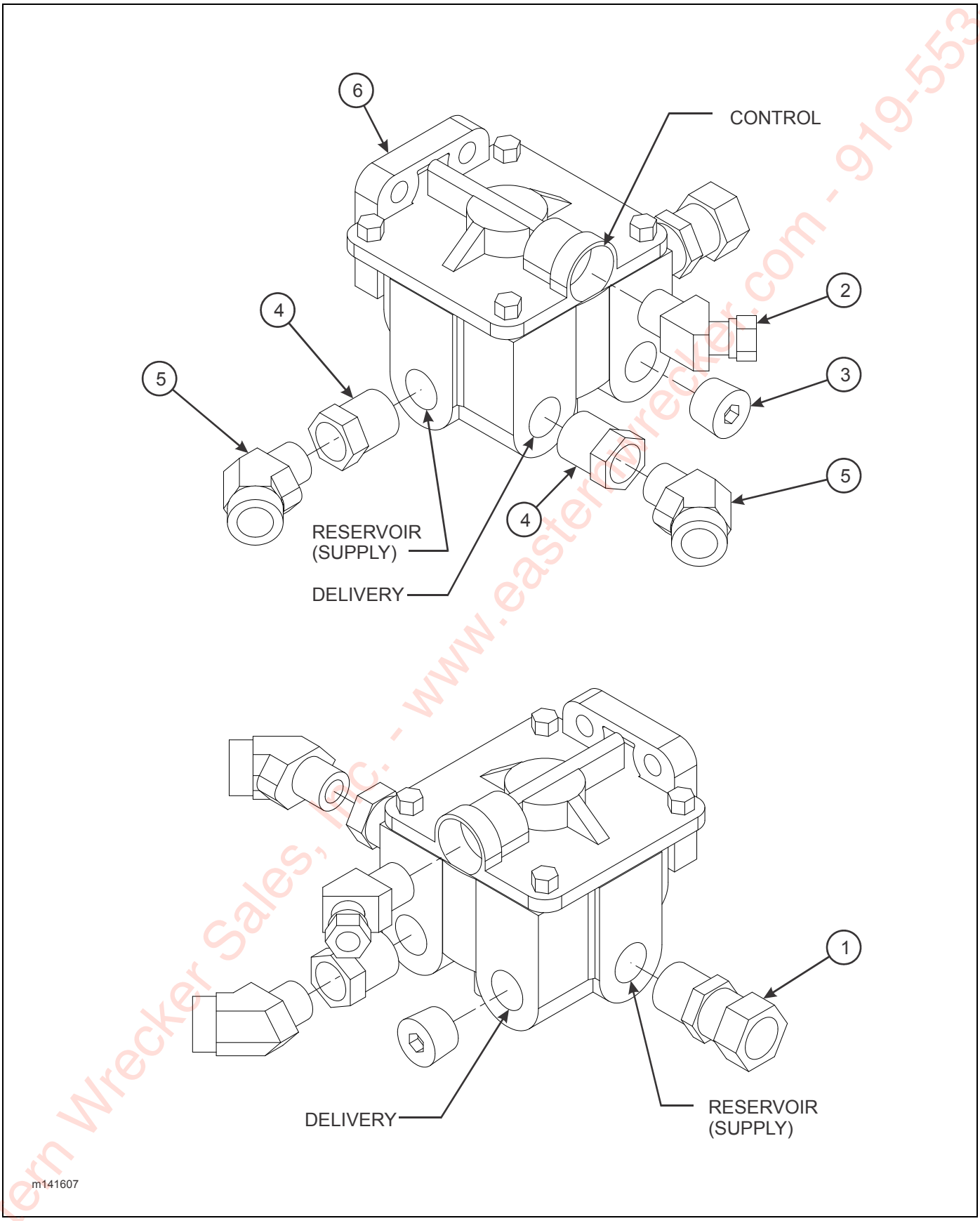

Figure 2-27: Valve Assembly, Air Booster

Eastern Wrecker Sales, Inc. - www.easternwrecker.com - 919-553-4038

VALVE ASSEMBLY, AIR BOOSTER

ITEM	PART NO.	DESCRIPTION	QTY.
	141607	VALVE ASSEMBLY, AIR BOOSTER	
1	1-297-010007-16	FITTING, AIR	1
2	1-297-010013-12	FITTING, AIR 45	1
3	1-560-010002-04	PLUG, PIPE, 1/2	1
4	2081-8-6S	REDUCER	2
5	2088-6-6S	ADAPTER, 45	2
6	3-843-010038	VALVE, AIR RELAY-FAST AIR BALANCE	1

Eastern Wrecker Sales, Inc. - www.easternwrecker.com - 919-553-4038

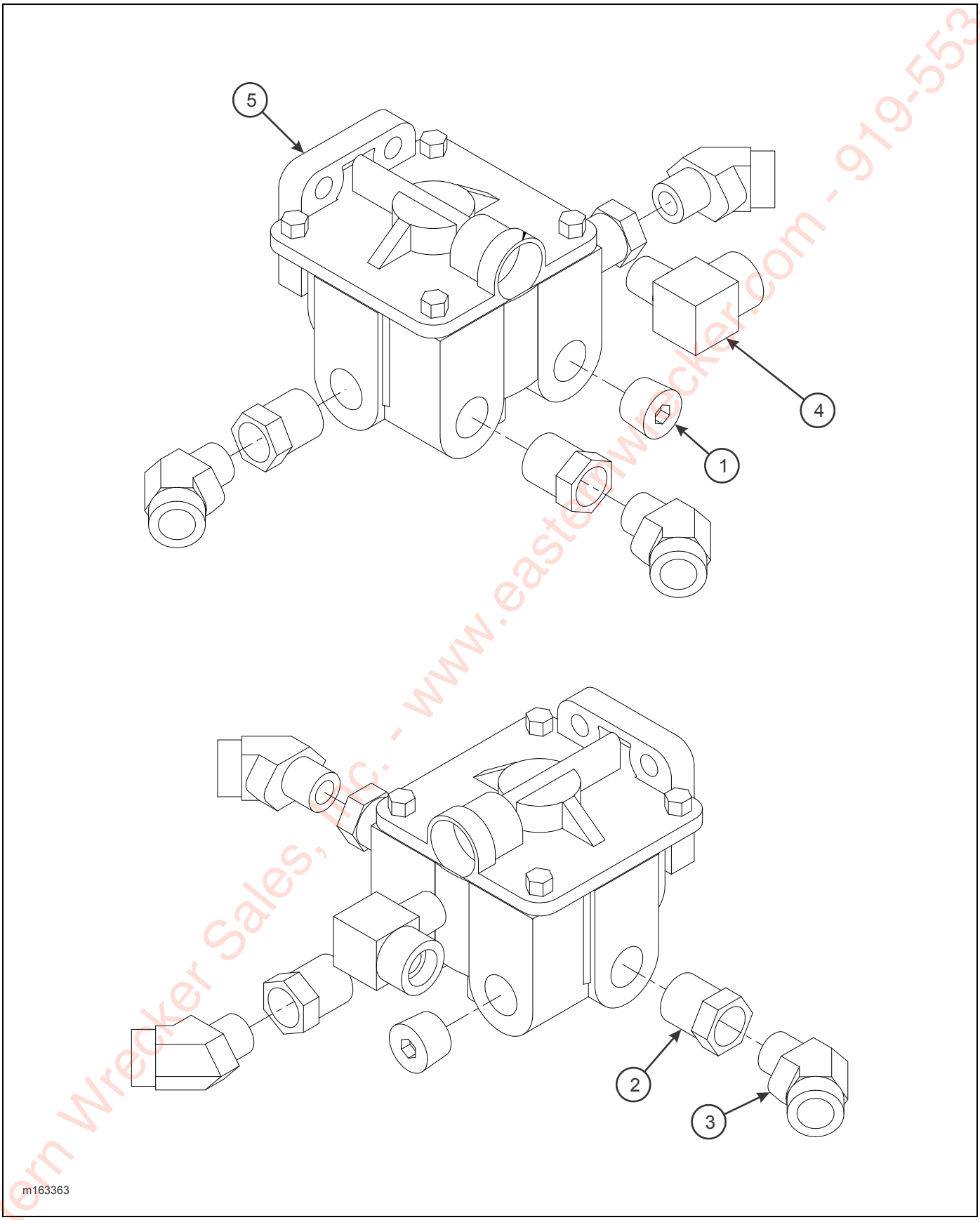

Figure 2-28: Valve Assembly, Air Booster

Eastern Wrecker Sales, Inc. - www.easternwrecker.com - 919-553-4038

VALVE ASSEMBLY, AIR BOOSTER (ARCTIC)

ITEM	PART NO.	DESCRIPTION	QTY.
	163363	VALVE ASSEMBLY, AIR BOOSTER	
1	1-560-010002-04	PLUG, PIPE, 1/2	1
2	2081-8-6S	REDUCER	3
3	2088-6-6S	ADAPTER, 45	3
4	2089-6-6S	ADAPTER, 90	1
5	3-843-010038	VALVE, AIR RELAY-FAST AIR BALANCE	1

Eastern Wrecker Sales, Inc. - www.easternwrecker.com - 919-553-4038

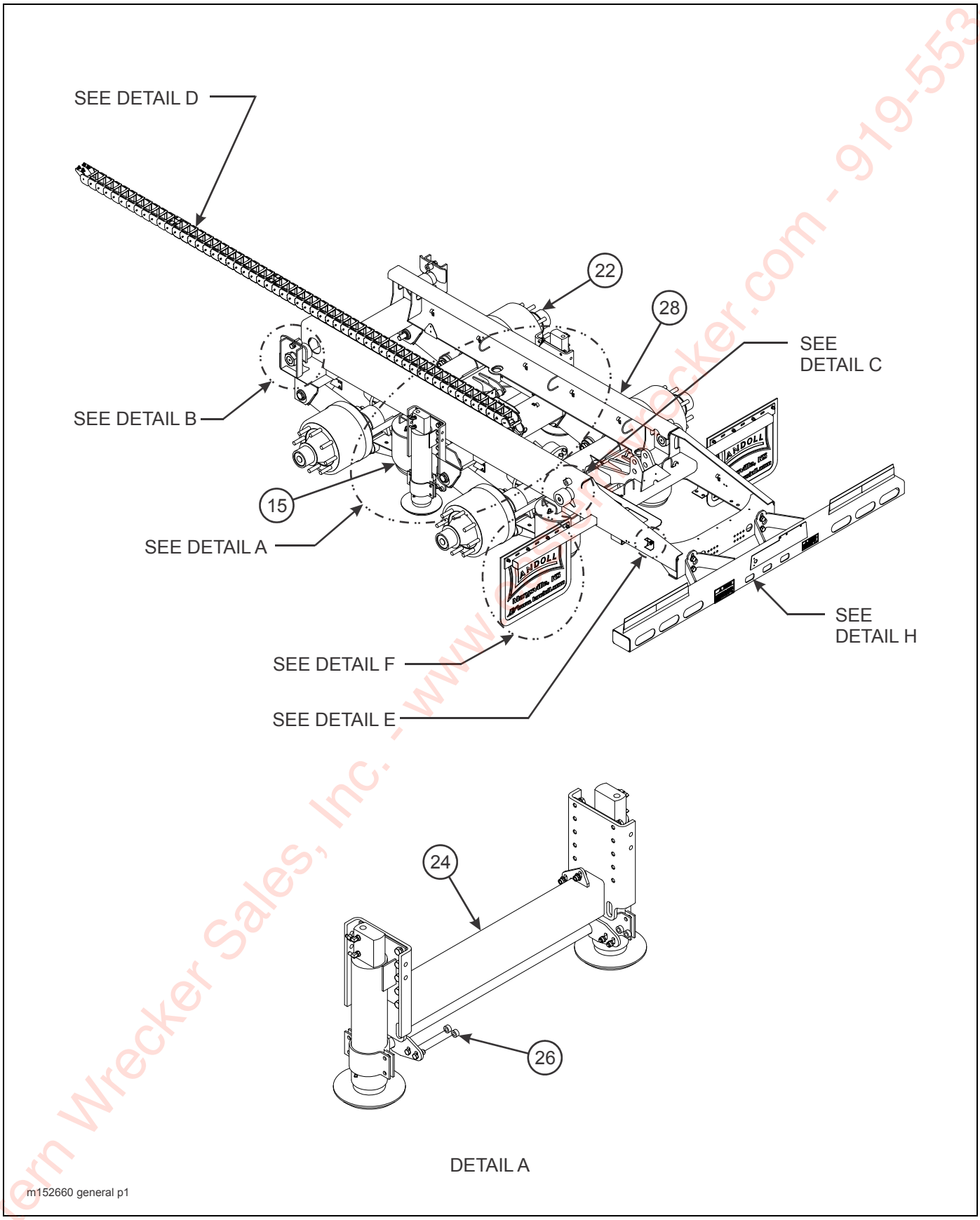

Figure 2-29: Suspension Assembly, General Items (425 & 440) (1 of 2)

Eastern Wrecker Sales, Inc. - www.easternwrecker.com - 919-553-4038

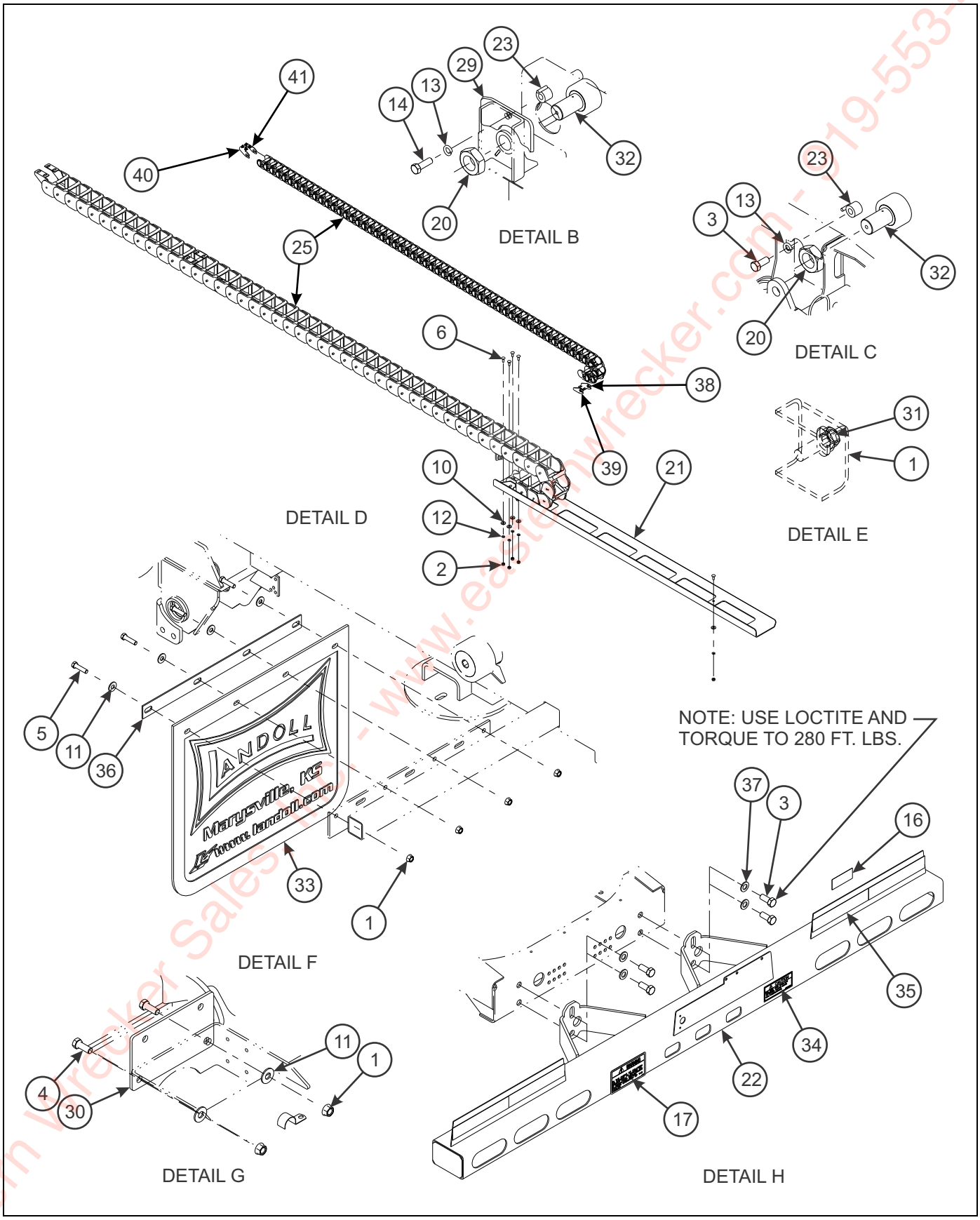

Figure 2-30: Suspension Assembly, General Items (425 & 440) (2 of 2)

Eastern Wrecker Sales Inc. - www.easternwrecker.com - 519-553-4038

SUSPENSION ASSEMBLY, GENERAL ITEMS (TANDEM)

ITEM	PART NO.	DESCRIPTION	QTY.
	152660	SUSPENSION ASSEMBLY	REF
1	1-510-010001	NUT, FLANGE LOCK 3/8-16	9
2	1-512-010007-05	NUT, HEX 1/4-20 GRB	10
3	1-654-010032-4	SCREW, HEX HEAD CAP 3/4-10 X 1-3/4 GR8	6
4	1-654-010051-05	SCREW, HEX HEAD CAP 3/8-16 X 1 GR5	2
5	1-654-010051-07	SCREW, HEX HEAD CAP 3/8-16 X 1-1/2 GR5	8
6	1-654-010158-1	SCREW, RD HEAD SQ NECK 1/4-20 X 3/4 GR2	10
7	1-796-010003-02	TIE STRAP, PLASTIC (NOT SHOWN)	10
8	1-796-010004-02	TIE, STRAP, PLASTIC (NOT SHOWN)	4
9	1-843-010014	VALVE EXTENSION, STEM (NOT SHOWN) (SEE PAGE 2-93)	4
10	1-861-010032-07	WASHER, FLAT 1/4W	10
11	1-861-010032-11	WASHER, FLAT 3/8W	8
12	1-861-010034-09	WASHER, SPLIT LOCK 1/4	10
13	1-861-010034-17	WASHER, SPLIT LOCK 3/4	4
14	100941	SCREW, HEX HEAD CAP 3/4-10 X 2-1/4 GR8	2
15	102363	SUSP ADJ RLU-228-3.5 (SEE PAGE 2-86)	2
	102364	SUSP ADJ RLU-228-5.5 (SEE PAGE 2-86)	2
16	103055	DECAL, ENERGY BUMPER CERT (SEE PAGE 2-5)	1
17	103056	DECAL, ENERGY BUMPER WARNING (SEE PAGE 2-5)	1
18	103082	SUSPENSION, AIR RLU A/R TANDEM (SEE PAGE 2-79)	1
19	103861	SENSOR, EXT CABLE 3M (10FT) (NOTSHOWN)	2
20	104034	NUT, HEX 2-12 GR2	4
21	109214	SPACER, WHEEL 17.5 HUB PILOT	4
22	121077	AXLE WELDMENT A/R 2512 SPG 70.5 X 36	2
	136257	AXLE WELDMENT 2512 SPG 70.5 36 TIS	2
	115738	AXLE WELDMENT 2516 69 X 31	2
	138205	AXLE WELDMENT 2512 SPG 69 X 31 TIS	2
	164428	AXLE WELDMENT 2512 SPG 75 X 36	2
	164430	AXLE WELDMENT 2512 SPG 75 X 36 TIS	2
	169424	AXLE WELDMENT 2512 SPG 77 X 36	2
	169426	AXLE WELDMENT 2512 SPG 77 X 36 TIS	2
	174138	AXLE WELDMENT 2512 SPG 70.5 X 36	2
		(FOR BREAKDOWNS, SEE PAGES 2-88 - 2-91)	
21	118897	TRAY, E-CHAIN	1
22	119580	BUMPER WELDMENT E/P 102	1
	121369	BUMPER WELDMENT (CAN)	1
23	120451	HOLD DOWN 425 U/C	4
24	121498	DOCK LEVELER ASSEMBLY (SEE PAGE 2-231)	1
	130851	DOCK LEVELER ASSEMBLY (SEE PAGE 2-239)	1
25	122536	SUPPORT E-CHAIN (58 LINKS) **(BEFORE 6-3-2015)**	1
	3-755-010189-1	E-CHAIN LINK ASSEMBLY (38-06-075-0) **(BEFORE 6-3-2015)**	58
	3-755-010189	E-CHAIN LINK ASSEMBLY **(BEFORE 6-3-2015)**	1
	189318	SUPPORT E-CHAIN, 58 LINKS **(AFTER 6-3-2015)**	1
26	124559	SPACER, D/L MOUNT	4
27	127579	AIR SYSTEM, U/C ABS (SEE PAGE 2-67)	1
	160708	AIR SYSTEM, UC BB ABS (SEE PAGE 2-69)	1
	173877	AIR SYSTEM, UC AQUA (SEE PAGE 2-79)	1
	174137	AIR SYSTEM, UC AQUA (SEE PAGE 2-67)	1
28	130556	UNDERCARRIAGE WELDMENT	1

Eastern Wrecker Sales, Inc. - www.easternwrecker.com - 919-553-4038

SUSPENSION ASSEMBLY, GENERAL ITEMS (TANDEM)

ITEM	PART NO.	DESCRIPTION	QTY.
	130794	UNDERCARRIAGE WELDMENT (440-50CA)	1
	160222	UNDERCARRIAGE WELDMENT BB	1
	171225	UNDERCARRIAGE WELDMENT BB	1
29	140829	PLATE, WEAR U/C 3/8” THICK	2
30	174670	BRACKET, ADAPTER ABS VALVE	1
31	2-181-010001	CLAMP, HOSE	1
32	3-076-010005	CAM FOLLOWER, 4" DIA	4
33	3-485-010001	MUD FLAP, 21"	2
34	3-573-010031	DECAL, TRAILER BUMPER (SEE PAGE 2-5)	1
35	3-573-010377	DECAL, 2" REFLEXITE TAPE RED/WHITE (SEE PAGE 2-5)	AR
36	3-762-010017	CLAMP, MUD FLAP	2
37	622-3511-008	WASHER, 3/4N	4
38	190701	BRACKET WLDMT, E-CHAIN LH **(AFTER 6-3-2015)**	1
39	190706	BRACKET WLDMT, E-CHAIN RH **(AFTER 6-3-2015)**	1
40	190700ZP	BRACKET, E-CHAIN LH **(AFTER 6-3-2015)**	1
41	190705ZP	BRACKET, E-CHAIN RH **(AFTER 6-3-2015)**	1
	189383	FIELD INSTALLATION KIT **(ITEMS 25 & 38-41)**	

Eastern Wrecker Sales, Inc. - www.easternwrecker.com - 919-553-4038

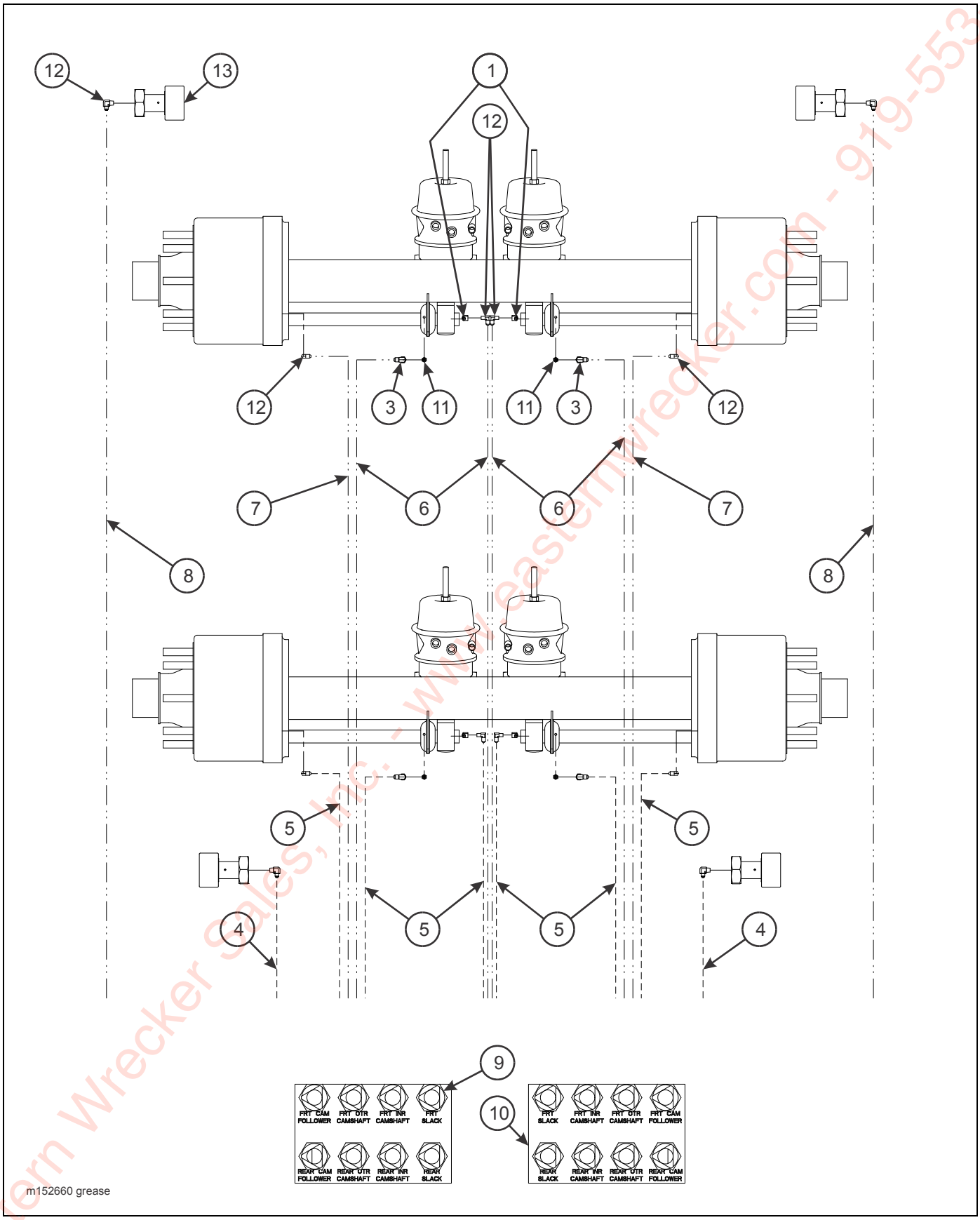

Figure 2-31: Suspension Assembly, Grease Items (425 & 440)

Eastern Wrecker Sales, Inc. - www.easternwrecker.com - 919-553-4038

SUSPENSION ASSEMBLY, GREASE ITEMS (TANDEM)

ITEM	PART NO.	DESCRIPTION	QTY.
	152660	SUSPENSION ASSEMBLY	REF
1	101528	ELBOW, BRASS PIPE STREET	4
2	113268	ADAPTER, 90	4
3	138155	ADAPTER, 90	4
4	142441	HOSE ASSEMBLY GREASE X 45 (425 & 440)	2
	142442	HOSE ASSEMBLY GREASE X 60 (440-CA)	2
5	142443	HOSE ASSEMBLY GREASE X 72 (425 & 440)	6
	144613	HOSE ASSEMBLY GREASE X 88 (440-CA)	6
6	142446	HOSE ASSEMBLY GREASE X 118 (425 & 440)	4
	142448	HOSE ASSEMBLY GREASE X 133 (440-CA)	4
7	142447	HOSE ASSEMBLY GREASE X 126 (425 & 440)	2
	142450	HOSE ASSEMBLY GREASE X 144 (440-CA)	2
8	142451	HOSE ASSEMBLY GREASE X 156 (425 & 440)	2
	144614	HOSE ASSEMBLY GREASE X 172 (440-CA)	2
9	142545	NUT, 7/16	16
10	142553	DECAL, GREASE U/C (SEE PAGE 2-5)	2
11	161797	ADAPTER, STRAIGHT	4
12	2024-2-4S	ADAPTER, ELBOW	8
13	3-076-010005	CAM FOLLOWER, 4" DIA	4

Eastern Wrecker Sales, Inc. - www.easternwrecker.com - 919-553-4038

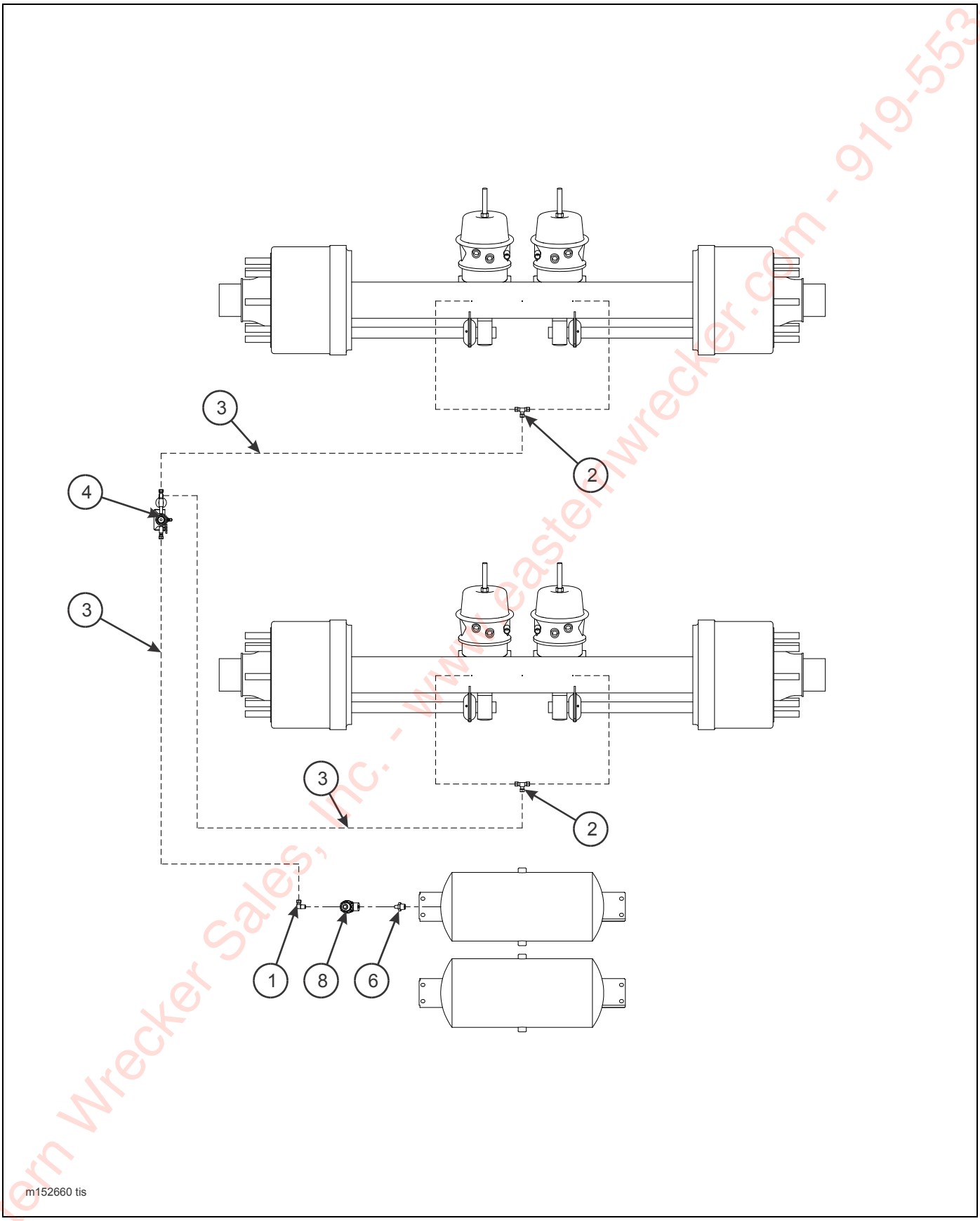

Figure 2-32: Suspension Assembly, Tire Inflation System (Tandem)

Eastern Wrecker Sales, Inc. - www.easternwrecker.com - 919-553-4038

SUSPENSION ASSEMBLY, TIRE INFLATION SYSTEM (TANDEM)

ITEM	PART NO.	DESCRIPTION	QTY.
	152660	SUSPENSION ASSEMBLY	REF
1	1-297-010008-07	FITTING AIR 90	1
2	1-297-010010-01	FITTING AIR UNION TEE	REF
3	1-833-010001	TUBING NYLON 1/4 OD	AR
4	157702	TIRE INFLATION 2AX (NOT SHOWN) (SEE PAGE 2-63)	1
5	176473	HARNESS KIT, TIRE INFLATION (NOT SHOWN) (SEE PAGE 2-65)	1
6	2083-8-4S	NIPPLE, HEX 1/2 - 1/4	1
7	3-780-010002	TANK AIR	REF
8	905-54-107	BRAKE PROTECTION VALVE	REF
	167692	FILTER	1

Eastern Wrecker Sales, Inc. - www.easternwrecker.com - 919-553-4038

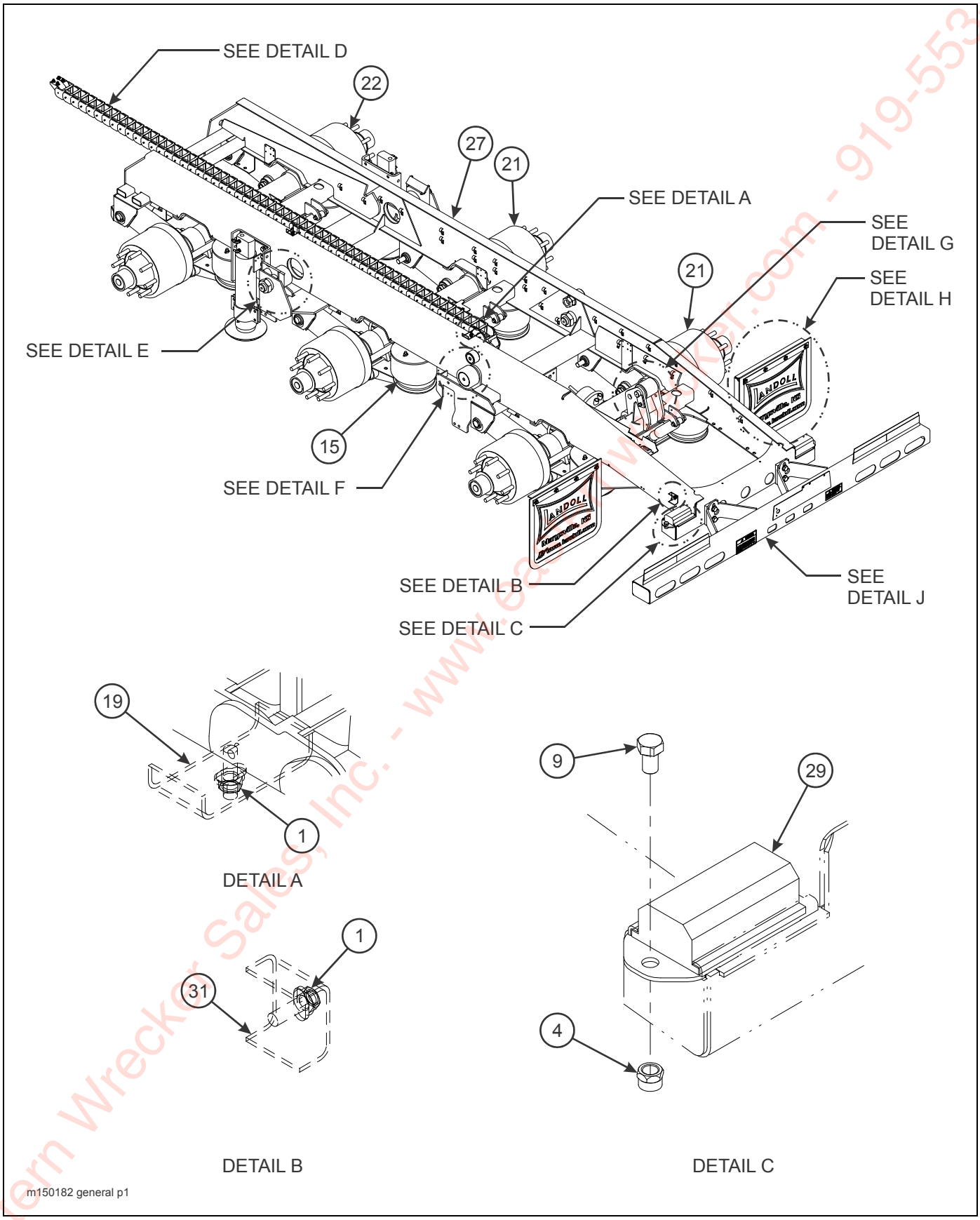

Figure 2-33: Suspension Assembly, General Items (455) (1 of 2)

Eastern Wrecker Sales, Inc. - www.ewsinc.com - 919-553-4038

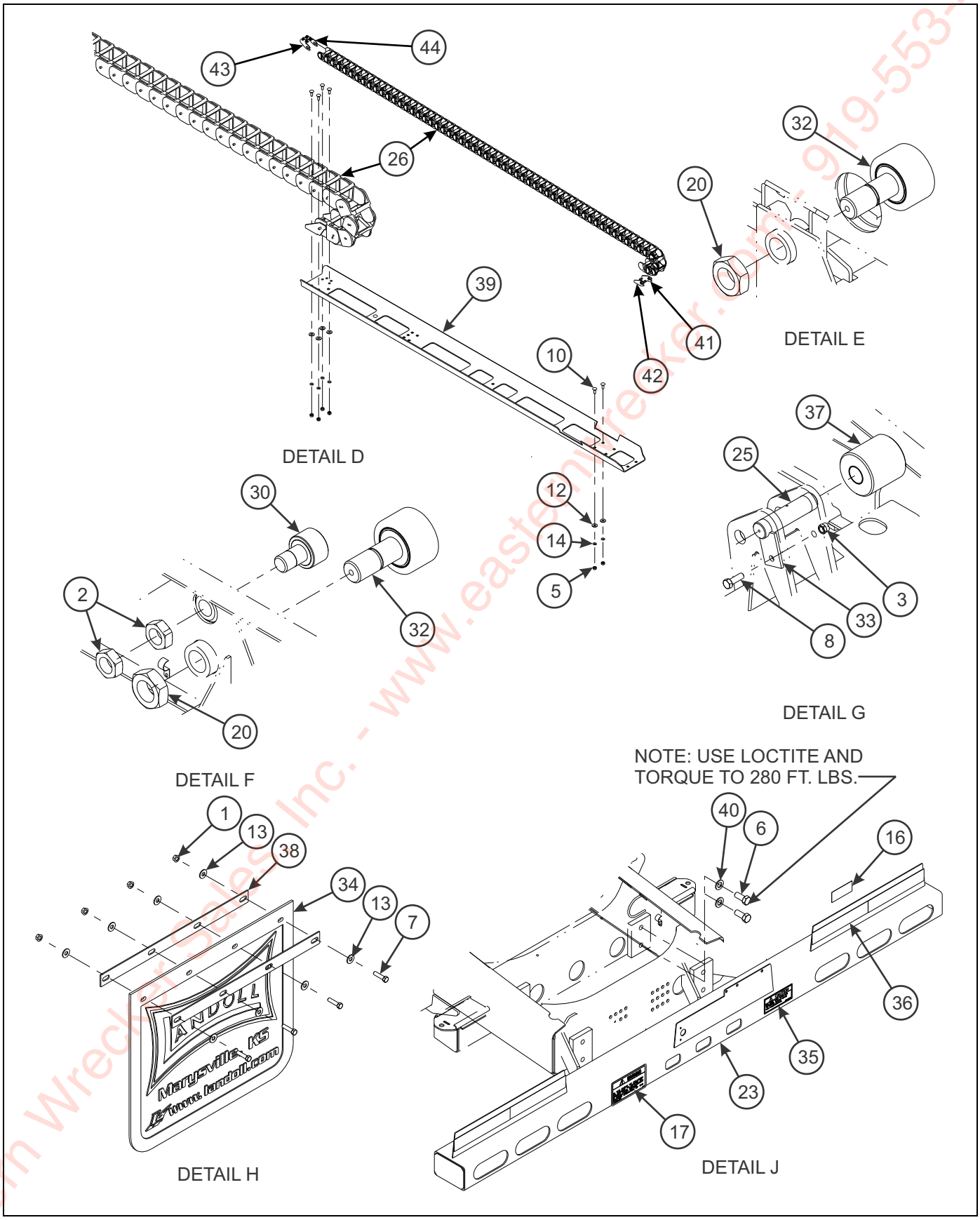

Figure 2-34: Suspension Assembly, General Items (455) (2 of 2)

Eastern Wrecker Sales Inc. - www.easternwrecker.com - 919-553-4038

SUSPENSION ASSEMBLY, GENERAL ITEMS (TRIPLE)

ITEM	PART NO.	DESCRIPTION	QTY.
	150182	SUSPENSION ASSEMBLY	REF
1	1-510-010001	NUT, FLANGE LOCK 3/8-16	9
2	1-511-010001-14	NUT, HEX JAM 1-1/2-12	4
3	1-512-010005-09	NUT, HEX LOCK 1/2-13 GRB	1
4	1-512-010005-13	NUT, HEX LOCK 5/8-11 GRB	2
5	1-512-010007-05	NUT, HEX 1/4-20 GRB	11
6	1-654-010032-4	SCREW, HEX HEAD CAP 3/4-10 X 1-3/4 GR8	4
7	1-654-010051-07	SCREW, HEX HEAD CAP 3/8-16 X 1-1/2 GR5	8
8	1-654-010055-03	SCREW, HEX HEAD CAP 1/2-13 X 1-1/2 GR5	1
9	1-654-010059-01	SCREW, HEX HEAD CAP 5/8-11 X 1 GR5	2
10	1-654-010158-1	SCREW, RD HEAD SQ NECK 1/4-20 X 3/4 GR2	11
11	1-843-010014	VALVE EXTENSION, STEM (NOT SHOWN) (SEE PAGE 2-93)	6
12	1-861-010032-07	WASHER, FLAT 1/4	*13,11
13	1-861-010032-11	WASHER, FLAT 3/8W	8
14	1-861-010034-09	WASHER, SPLIT LOCK 1/4	11
15	102363	SUSPENSION ADJ RLU-228-3.5 (SEE PAGE 2-86)	3
	102364	SUSP ADJ RLU-228-5.5 (SEE PAGE 2-86)	2
16	103055	DECAL, ENERGY BUMPER CERT (SEE PAGE 2-5)	1
17	103056	DECAL, ENERGY BUMPER WARNING (SEE PAGE 2-5)	1
18	103084	SUSPENSION, AIR SYS TRIDEM (NOT SHOWN) (SEE PAGE 2-81)	1
	139930	SUSPENSION, AIR SYS ARCTIC (NOT SHOWN)(SEE PAGE 2-83)	1
19	103817	CLAMP, HOSE	1
20	104034	NUT, HEX 2-12 GRB	4
21	121077	AXLE WELDMENT A/R 2512 SPG 70.5 X 36	2
	136257	AXLE WELDMENT 2512 SPG 70.5 36 TIS	2
	142512	AXLE WELDMENT 2512 SPG 88.5 X 54	2
	133796	AXLE WELDMENT 2512 SPG 88.5 X 54	2
	115738	AXLE WELDMENT 2516 SPG 69 X 31	2
	138205	AXLE WELDMENT 2512 SPG 69 X 31 TIS	2
	158540	AXLE WELDMENT 2516 SPG 87 X 48	2
	164428	AXLE WELDMENT 2512 SPG 70.5 X 36 TIS	2
	164430	AXLE WELDMENT 2512 SPG 70.5 X 36 TIS	2
	169424	AXLE WELDMENT 2512 SPG 77 X 36	2
	169426	AXLE WELDMENT 2512 SPG 77 X 36 TIS	2
	172100	AXLE WELDMENT 2516 SPG 87 X 48 TIS	2
		(FOR BREAKDOWNS, SEE PAGES 2-88 - 2-91)	
22	121078	AXLE WELDMENT A/R 2512 SER 70.5 X 36	1
	138200	AXLE WELDMENT 2512 SER70.5 36 TIS	1
	142513	AXLE WELDMENT 2512 SER 88.5 X 54	1
	133797	AXLE WELDMENT 2512 SER 88.5 X 54	1
	115740	AXLE WELDMENT 2512 SER 69 X 31	1
	145537	AXLE WELDMENT 2512 SER 69X 31 TIS	1
	158541	AXLE WELDMENT 2516 SER 87 X 48	1
	164429	AXLE WELDMENT 2512 SER 70.5 X 36 TIS	1
	164431	AXLE WELDMENT 2512 SER 70.5 X 36 TIS	1
	169425	AXLE WELDMENT 2512 SER 77 X 36	1
	169426	AXLE WELDMENT 2512 SER 77 X 36 TIS	1
	172101	AXLE WELDMENT 2516 SER 87 X 48 TIS	1
		(FOR BREAKDOWNS, SEE PAGES 2-88 - 2-91)	

Eastern Wrecker Sales, Inc. - www.easternwrecker.com - 919-553-4038

SUSPENSION ASSEMBLY, GENERAL ITEMS (TRIPLE)

ITEM	PART NO.	DESCRIPTION	QTY.
23	119580	BUMPER WELDMENT E/P 102	1
	133777	BUMPER WELDMENT 10’	1
	121369	BUMPER WELDMENT (CAN)	1
24	126537	DOCK LEVELER ASSEMBLY (SEE PAGE 2-241)	1
	121498	DOCK LEVELER ASSEMBLY (SEE PAGE 2-231)	1
	130851	DOCK LEVELER ASSEMBLY (SEE PAGE 2-239)	1
	172775	DOCK LEVELER ASSEMBLY SINGLE 60K ARCTIC (SEE PAGE 2-233)	1
	174179	DOCK LEVELER ASSEMBLY 120” 60K (SEE PAGE 2-235)	1
	174180	DOCK LEVELER ASSEMBLY 120” 60K ARCTIC (SEE PAGE 2-237)	1
25	121686	PIN, 1-1/2 X 6-1/4	1
26	122536	SUPPORT E-CHAIN 455 **(BEFORE 6-3-2015)**	1
	3-755-010189-1	E-CHAIN LINK ASSEMBLY (38-06-075-0) **(BEFORE 6-3-2015)**	58
	140032	SUPPORT E-CHAIN ARCTIC **(BEFORE 6-3-2015)**	1
	126794	SUPPORT, E-CHAIN ARCTIC **(BEFORE 6-3-2015)**	1
	126795	E-CHAIN LINK, ARCTIC **(BEFORE 6-3-2015)**	1
	126796	E-CHAIN MOUNTING BRACKET, ARCTIC **(BEFORE 6-3-2015)**	1
	189318	SUPPORT E-CHAIN, 58 LINKS **(AFTER 6-3-2015)**	1
27	128672	SUSPENSION WELDMENT	1
	133768	SUSPENSION WELDMENT 10’	1
	149026	SUSPENSION WELDMENT NARROW	1
	158549	SUSPENSION WELDMENT 120 BB 87 TRK	1
	171942	SUSPENSION WELDMENT 50CA	1
28	150151	AIR SYSTEM, U/C ABS TRI. (SEE PAGE 2-71)	1
	103816	AIR SYSTEM, U/C ABS (SEE PAGE 2-73)	1
	139932	AIR SYSTEM, U/C ARCTIC (SEE PAGE 2-75)	1
29	142565	PLATE, RUB BUMPER 2"	2
30	145532	CAM FOLLOWER 3" SEALED (TORQUE TO 166 FT/LBS)	2
31	2-181-010001	CLAMP, HOSE	1
32	3-076-010015	CAM FOLLOWER 5" DIA (TORQUE TO 250 FT/LBS)	4
33	3-187-010013	CLIP, PIN RETAINER	1
34	3-485-010001	MUD FLAP, 21"	2
35	3-573-010031	DECAL, TRAILER BUMPER (SEE PAGE 2-5)	1
36	3-573-010377	DECAL, 2" REFLEXITE TAPE RED/WHITE (SEE PAGE 2-5)	AR
37	3-645-010084	ROLLER ASSEMBLY, REAR U/C	1
38	3-762-010017	CLAMP, MUD FLAP	2
39	3-821-010005	TRAY, CAT TRACK	1
40	622-3511-008	WASHER, 3/4N	4
41	190701	BRACKET WLDMT, E-CHAIN LH **(AFTER 6-3-2015)**	1
42	190706	BRACKET WLDMT, E-CHAIN RH **(AFTER 6-3-2015)**	1
43	190700ZP	BRACKET, E-CHAIN LH **(AFTER 6-3-2015)**	1
44	190705ZP	BRACKET, E-CHAIN RH **(AFTER 6-3-2015)**	1
	189838	FIELD INSTALLATION KIT **(ITEMS 26 & 41-44)**	1

Eastern Wrecker Sales, Inc. - www.easternwrecker.com - 919-553-4038

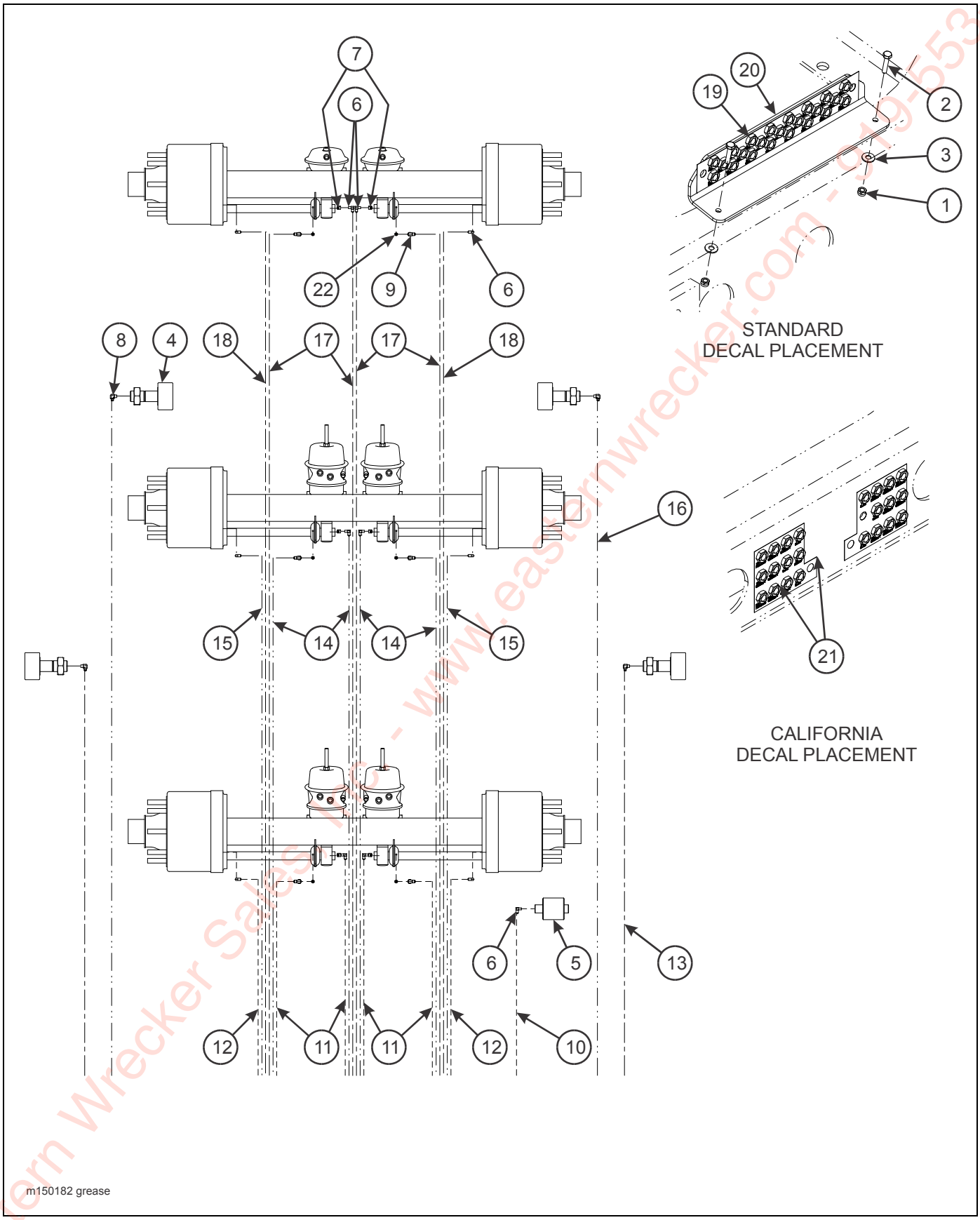

Figure 2-35: Suspension Assembly, Grease Items (455)

Eastern Wrecker Sales Inc - www.easternwrecker.com - 519-553-4038

SUSPENSION ASSEMBLY, GREASE ITEMS (TRIPLE)

ITEM	PART NO.	DESCRIPTION	QTY.
	150182	SUSPENSION ASSEMBLY	REF
1	1-512-010005-01	NUT, HEX LOCK 1/4-20 GRB	2
2	1-654-010047-07	SCREW, HEX HEAD CAP 1/4-20 X 1-1/4 GR5	2
3	1-861-010032-07	WASHER, FLAT 1/4	*13,11
4	3-076-010015	CAM FOLLOWER 5" DIA (TORQUE TO 250 FT/LBS)	4
5	3-645-010084	ROLLER ASSEMBLY, REAR U/C	1
6	2024-2-4S	ADAPTER, ELBOW	8
7	101528	ELBOW, BRASS PIPE STREET	4
8	113268	ADAPTER, 90	4
9	138155	ADAPTER, 90	4
10	142441	HOSE ASSEMBLY, GREASE 1/4 X 45 (STD MODELS)	1
	142443	HOSE ASSEMBLY, GREASE 1/4 X 72 (CA. MODELS)	1
11	142442	HOSE ASSEMBLY, GREASE 1/4 X 60 (STD MODELS)	4
	142444	HOSE ASSEMBLY, GREASE 1/4 X 83 (CA. MODELS)	2
12	142443	HOSE ASSEMBLY, GREASE 1/4 X 72 (STD MODELS)	2
	142445	HOSE ASSEMBLY, GREASE 1/4 X 102 (CA. MODELS)	4
13	142444	HOSE ASSEMBLY, GREASE 1/4 X 83 (STD MODELS)	2
	142445	HOSE ASSEMBLY, GREASE 1/4 X 102 (CA. MODELS)	4
14	142446	HOSE ASSEMBLY, GREASE 1/4 X 118 (STD MODELS)	4
	142450	HOSE ASSEMBLY, GREASE 1/4 X 144 (CA. MODELS)	4
15	142447	HOSE ASSEMBLY, GREASE 1/4 X 126 (STD MODELS)	2
	142451	HOSE ASSEMBLY, GREASE 1/4 X 156 (CA. MODELS)	2
16	144614	HOSE ASSEMBLY GREASE X 172 (STD MODELS)	2
	142454	HOSE ASSEMBLY, GREASE 1/4 X 200 (CA. MODELS)	2
17	145416	HOSE ASSEMBLY, GREASE 1/4 X 186 (STD MODELS)	4
	142455	HOSE ASSEMBLY, GREASE 1/4 X 217 (CA. MODELS)	4
18	142454	HOSE ASSEMBLY, GREASE 1/4 X 200 (STD MODELS)	2
	142455	HOSE ASSEMBLY, GREASE 1/4 X 217 (CA. MODELS)	
19	142545	NUT, 7/16	16
20	143182	BRACKET, GREASE HOSE	1
21	143688	DECAL, GREASE (SEE PAGE 2-5)	1
22	161797	ADAPTER, STRAIGHT	4

Eastern Wrecker Sales, Inc. - www.easternwrecker.com - 919-553-4038

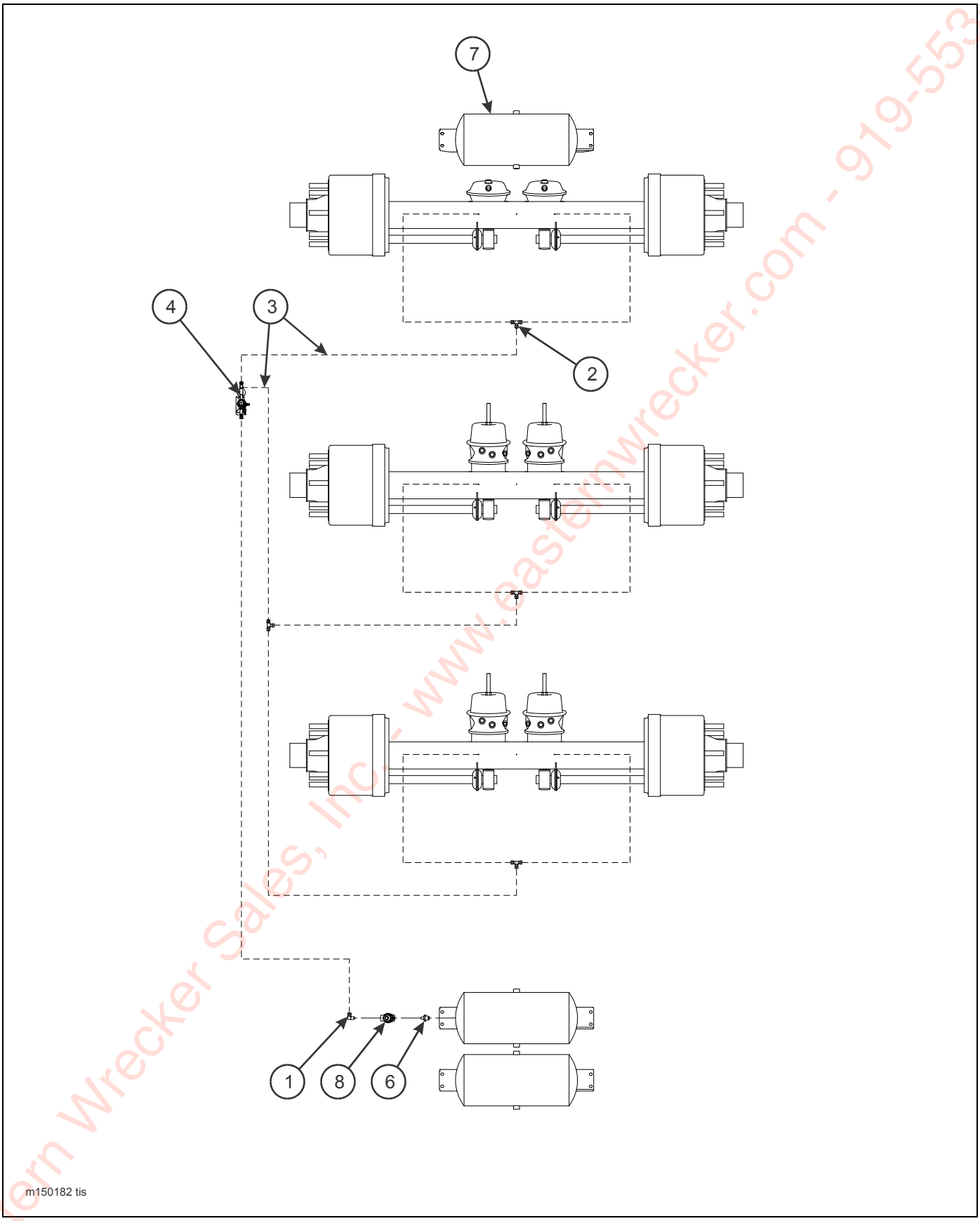

Figure 2-36: Suspension Assembly, Tire Inflation System (Triple)

Eastern Wrecker Sales, Inc. - www.easternwrecker.com - 919-553-4038

SUSPENSION ASSEMBLY, TIRE INFLATION SYSTEM (TRIPLE)

ITEM	PART NO.	DESCRIPTION	QTY.
	150182	SUSPENSION ASSEMBLY, TIRE INFLATION SYSTEM	REF
1	1-297-010008-07	FITTING AIR 90	1
2	1-297-010010-01	FITTING AIR UNION TEE	REF
3	1-833-010001	TUBING NYLON 1/4 OD	AR
4	157703	TIRE INFLATION SYSTEM (NOT SHOWN) (SEE PAGE 2-63)	1
5	176473	HARNESS KIT, TIRE INFLATION (NOT SHOWN) (SEE PAGE 2-65)	1
6	2083-8-4S	NIPPLE, HEX 1/2 - 1/4	1
7	3-780-010002	TANK AIR	REF
8	905-54-107	BRAKE PROTECTION VALVE	REF
	167692	FILTER	1

Eastern Wrecker Sales, Inc. - www.easternwrecker.com - 919-553-4038

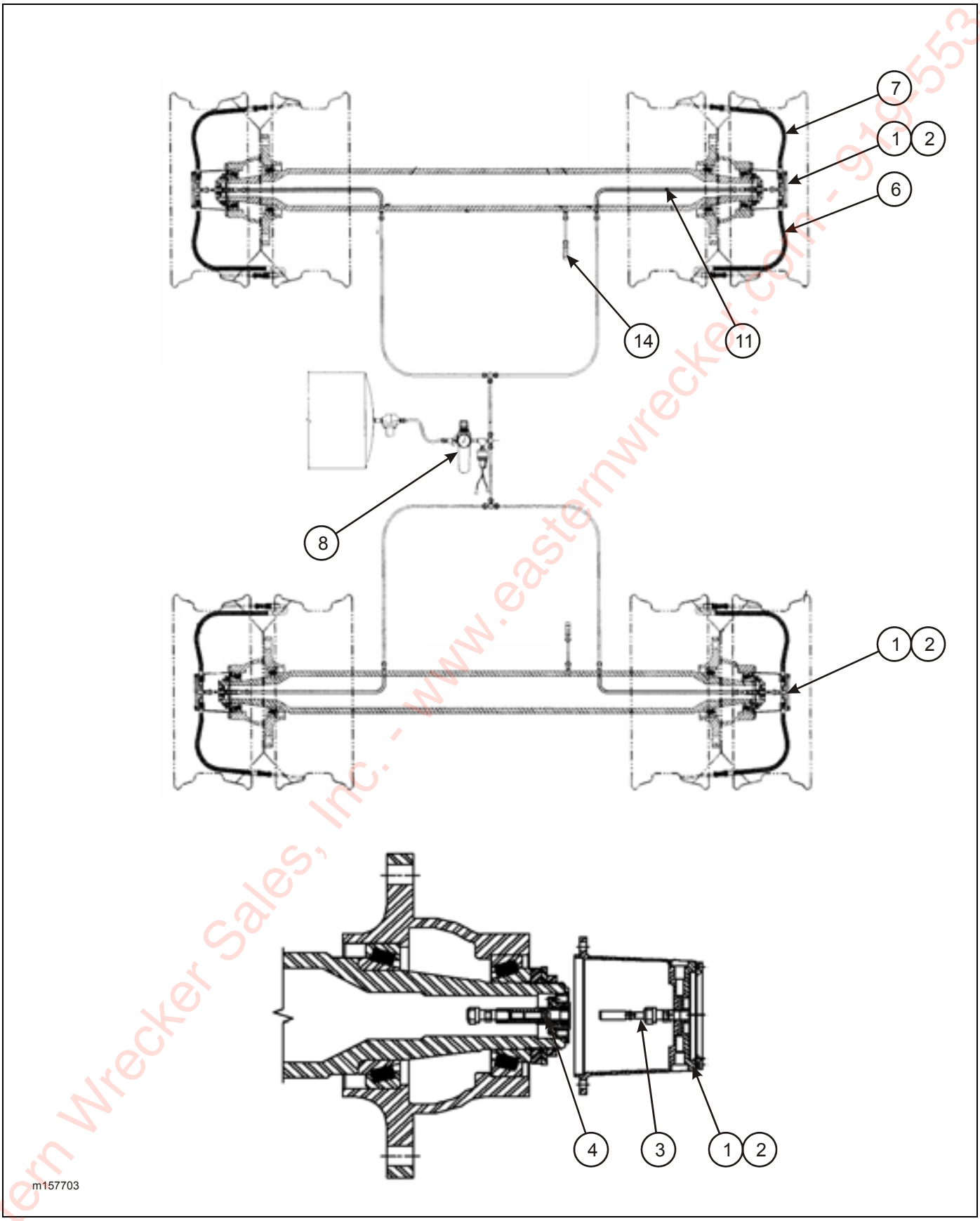

Figure 2-37: Tire Inflation System (Option)

Eastern Wrecker Sales, Inc. - www.easternwrecker.com - 919-553-4038

TIRE INFLATION SYSTEM (OPTION)

ITEM	PART NO.	DESCRIPTION	QTY.
	157703	TIRE INFLATION SYSTEM 3AX	
	157702	TIRE INFLATION SYSTEM 2AX	
1	139529	HUB CAP ASSEMBLY, LOW PROFILE 5.5” OIL	*6, 4
2	157704	GASKET, HUB CAP	*6, 4
3	157705	ROTATING SHAFT, UNIVERSAL	*6, 4
4	157706	SPINDLE PLUG, 1.75”	*6, 4
5	157707	AIR CYLINDER ASSEMBLY (NOT SHOWN)	*6, 4
6	159338	HOSE ASSEMBLY, OUTER TIRE	*6, 4
7	159337	HOSE ASSEMBLY, INNER TIRE	*6, 4
8	178749	REGULATOR ASSEMBLY W/ BALL VALVE	1
9	-----	WARNING LIGHT WIRE (NOT SHOWN)	1
10	-----	NYLON AIR TUBE (NOT SHOWN)	1
11	-----	CHAFE GUARD	1
12	-----	LARGE WIRE TIES (NOT SHOWN)	3
13	148417	TRIPLE AXLE HARDWARE KIT (NOT SHOWN)	1
	148413	DUAL AXLE HARDWARE KIT (NOT SHOWN)	1
14	-----	AXLE VENT	1
15	145677	LIGHT PRESSURE GUARD (NOT SHOWN)	1
16	154653	PRESSURE SWITCH (NOT SHOWN)	1
17	085-002-02	RUBBER PLUG	*6,4

* 1ST QUANTITY IS USED ON P/N 157703; 2ND QUANTITY IS USED ON P/N 157702

Eastern Wrecker Sales, Inc. - www.easternwrecker.com - 919-553-4038

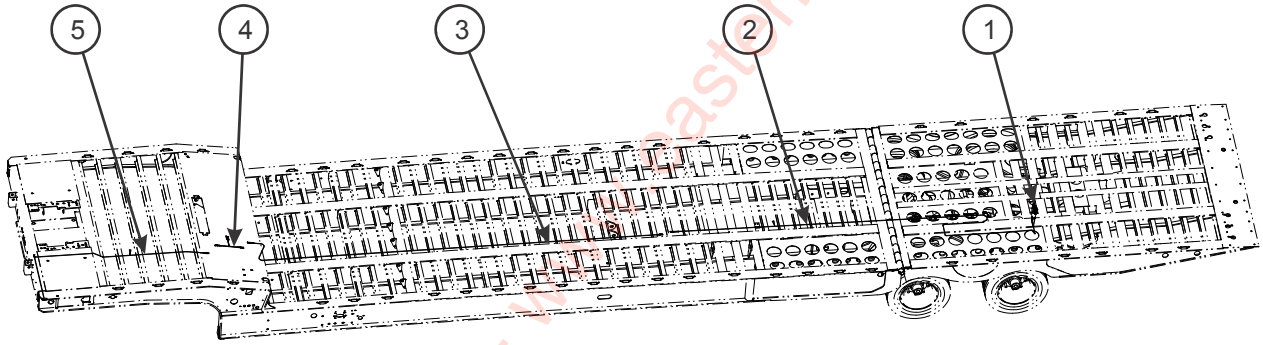

m176473

Figure 2-38: Harness Kit, Tire Inflation System (Option)

Eastern Wrecker Sales, Inc. - www.easternwrecker.com - 919-553-4038

HARNESS KIT, TIRE INFLATION SYSTEM (OPTION)

ITEM	PART NO.	DESCRIPTION	QTY.
	176473	HARNESS KIT, TIRE INFLATION SYSTEM	
1	157702	TIRE INFLATION SYSTEM, 2 AXLE	REF
2	176476	HARNESS, TIRE INFLATION LD25S	1
3	176477	HARNESS, TIRE INFLATION LD30	1
4	176478	HARNESS, TIRE INFLATION LDPWR	1
5	176479	HARNESS, TIRE INFLATION LD15L	1

Eastern Wrecker Sales, Inc. - www.easternwrecker.com - 919-553-4038

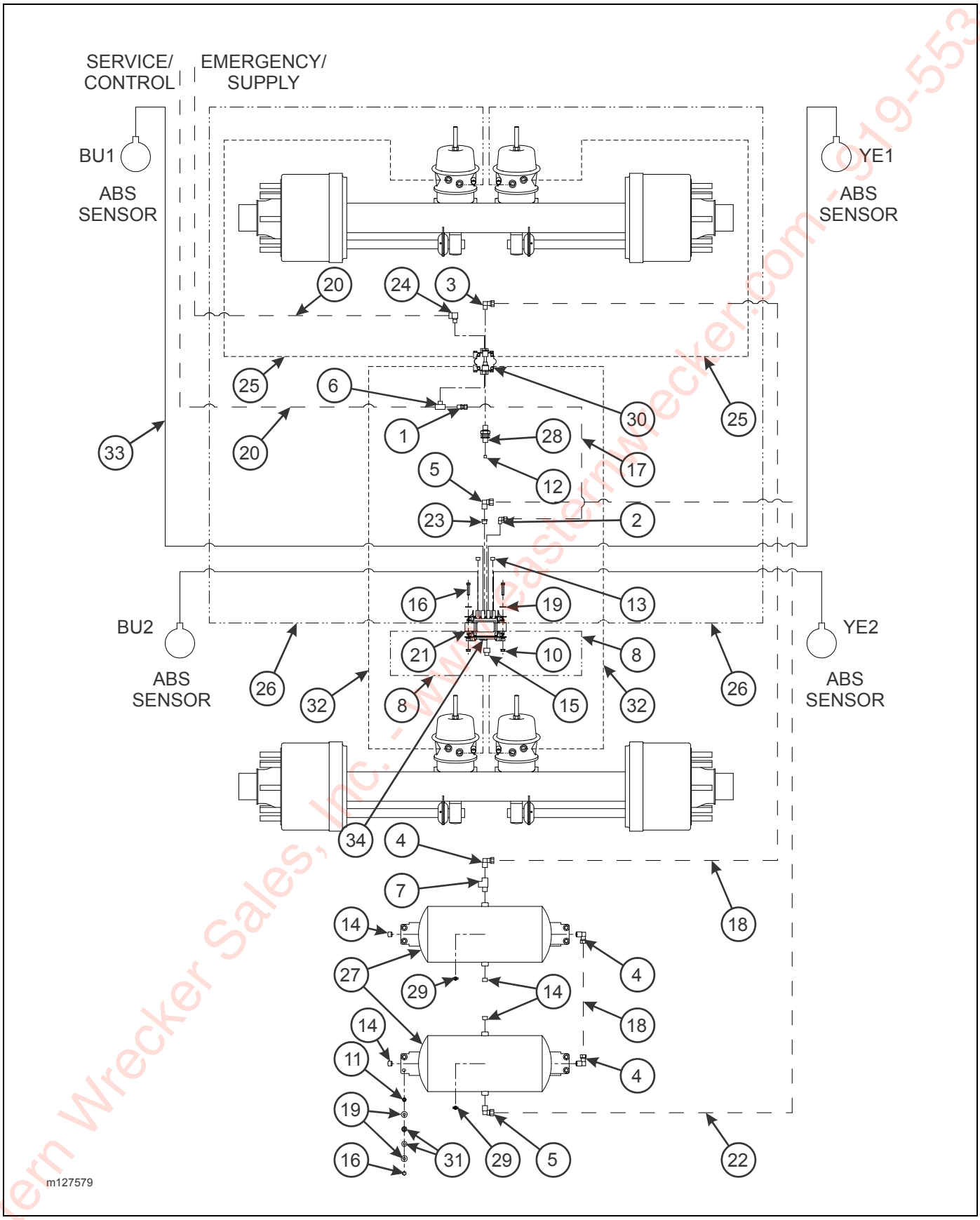

Figure 2-39: Spring Air Brake System w/ ABS (425 & 440 (Aqua Package))

Eastern Wrecker Sales, Inc. - www.easternwrecker.com - 919-553-4038

SPRING AIR BRAKE SYSTEM W/ ABS (TANDEM)

ITEM	PART NO.	DESCRIPTION	QTY.
	127579	AIR SYSTEM U/C, ABS (425)	
	174137	AIR SYSTEM U/C, ABS (440 (AQUA PACKAGE))	
1	1-297-010007-12	FITTING AIR	1
2	1-297-010008-18	FITTING, AIR 90	1
3	1-297-010008-23	FITTING, AIR 90	1
4	1-297-010008-24	FITTING, AIR 90	3
5	1-297-010008-26	FITTING, AIR 90	2
6	1-297-010017-03	FITTING AIR M/BR TEE	1
7	1-297-010018-04	FITTING, BR TEE (127879)	REF
8	1-384-010038056	HOSE, AIR 56”	2
9	1-394-010001	HOSE ABRASION SLEEVE X 2 (NOT SHOWN)	2
10	1-510-010001	NUT, FLANGE LOCK 3/8-16	3
11	1-512-010005-05	NUT, HEX LOCK 3/8-16 GRB	8
12	1-560-010002-02	PIPE PLUG 1/4	1
13	1-560-010002-03	PIPE PLUG 3/8	2
14	1-560-010002-04	PIPE PLUG 1/2	4
15	1-560-010002-05	PIPE PLUG 3/4-14	1
16	1-654-010051-08	SCREW, HEX HEAD CAP 3/8-16 X 1-3/4 GR5	10
17	1-833-010002	TUBING, NYLON 3/8	AR
18	1-833-010003	TUBING NYLON 1/2	AR
19	1-861-010032-11	WASHER, FLAT 3/8W	18
20	100949	HOSE AIR 3/8 X 222 W/ 3/8 ENDS	2
21	114584	BRAKE KIT, ABS 4S/2M (127579) (SEE PAGE 2-77)	1
	114585	BRAKE KIT, ABS 2S/1M SGL (174137) (SEE PAGE 2-77)	1
22	117304	TUBING, NYLON 5/8	AR
23	118-2659-9	BUSHING 1/2 X 3/4	1
24	2089-6-6S	ADAPTER, 90	1
25	3-384-010020	HOSE, AIR 3/8 X 32	2
26	3-384-010031	HOSE, AIR 3/8 X 42	2
27	3-780-010002	TANK AIR	2
28	55B61	FRAME UNION	1
29	56D4	AIR TANK DRAIN COCK (127579)	2
	757-363	VALVE W/ 4’ CABLE PULL DRAIN (174137)	2
30	758-181	VALVE RELAY EMERGENCY (127579)	1
	174241	VALVE, 4 PORT (174137)	1
31	805-2	STEP BUSHING	16
32	3-384-010031	HOSE, AIR 3/8 X 42 (127579)	2
33	103861	SENSOR, EXT CABLE 3M (10FT)	2
34	174143	KIT, SNORKEL 2S/1M ABS VALVE (174137)	1

Eastern Wrecker Sales, Inc. - www.easternwrecker.com - 919-553-4038

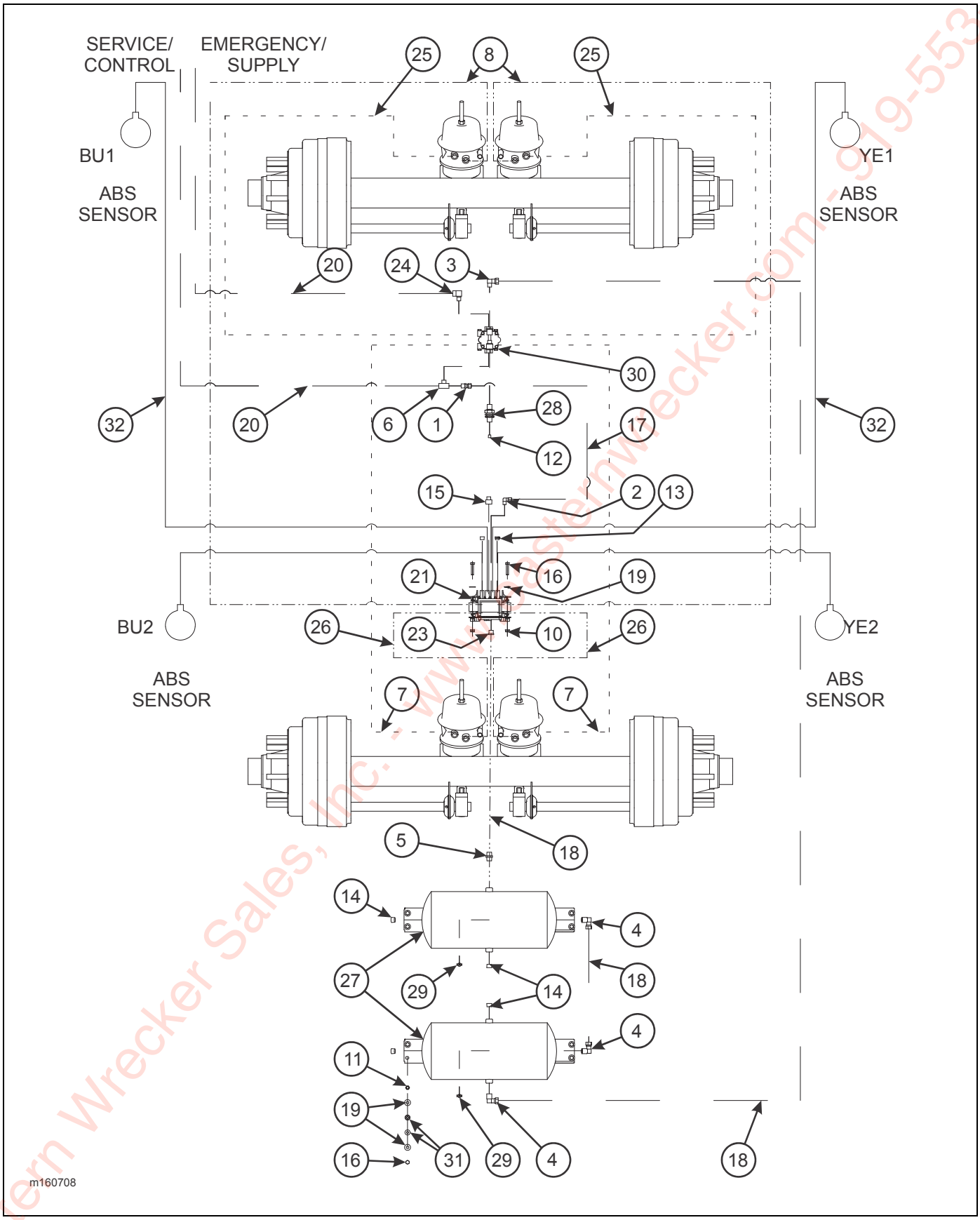

Figure 2-40: Spring Air Brake System w/ ABS (440 CA BB)

Eastern Wrecker Sales, Inc. - www.easternwrecker.com - 919-553-4038

SPRING AIR BRAKE SYSTEM W/ ABS (TANDEM)

ITEM	PART NO.	DESCRIPTION	QTY.
	160708	AIR SYSTEM, U/C, ABS CA BB (440)	
1	1-297-010007-12	FITTING AIR	1
2	1-297-010008-18	FITTING, AIR 90	1
3	1-297-010008-23	FITTING, AIR 90	1
4	1-297-010008-24	FITTING, AIR 90	2
5	2083-8-8S	NIPPLE	1
6	1-297-010017-03	FITTING AIR M/BR TEE	1
7	1-384-010038060	HOSE, AIR 3/8 X 60	2
8	103738	HOSE, AIR 3/8 X 100	2
9	1-394-010001	HOSE ABRASION SLEEVE X 2 (NOT SHOWN)	2
10	1-510-010001	NUT, FLANGE LOCK 3/8-16	3
11	1-512-010005-05	NUT, HEX LOCK 3/8-16 GRB	8
12	1-560-010002-02	PIPE PLUG 1/4	1
13	1-560-010002-03	PIPE PLUG 3/8	2
14	1-560-010002-04	PIPE PLUG 1/2	4
15	1-560-010002-05	PIPE PLUG 3/4-14	1
16	1-654-010051-08	SCREW, HEX HEAD CAP 3/8-16 X 1-3/4 GR5	10
17	1-833-010002	TUBING, NYLON 3/8	AR
18	1-833-010003	TUBING NYLON 1/2	AR
19	1-861-010032-11	WASHER, FLAT 3/8W	18
20	100949	HOSE AIR 3/8 X 222 W/ 3/8 ENDS	2
21	114584	BRAKE KIT, ABS 4S/2M (SEE PAGE 2-77)	1
22	117304	TUBING, NYLON 5/8	AR
23	118-2659-9	BUSHING 1/2 X 3/4	1
24	2089-6-6S	ADAPTER, 90	1
25	3-384-010020	HOSE, AIR 3/8 X 32	2
26	3-384-010031	HOSE, AIR 3/8 X 42	2
27	3-780-010002	TANK AIR	2
28	55B61	FRAME UNION	1
29	56D4	AIR TANK DRAIN COCK	2
30	758-181	VALVE RELAY EMERGENCY	1
31	805-2	STEP BUSHING	16
32	103861	SENSOR, EXT CABLE 3M (10FT) (160708)	2

Eastern Wrecker Sales, Inc. - www.easternwrecker.com - 919-553-4038

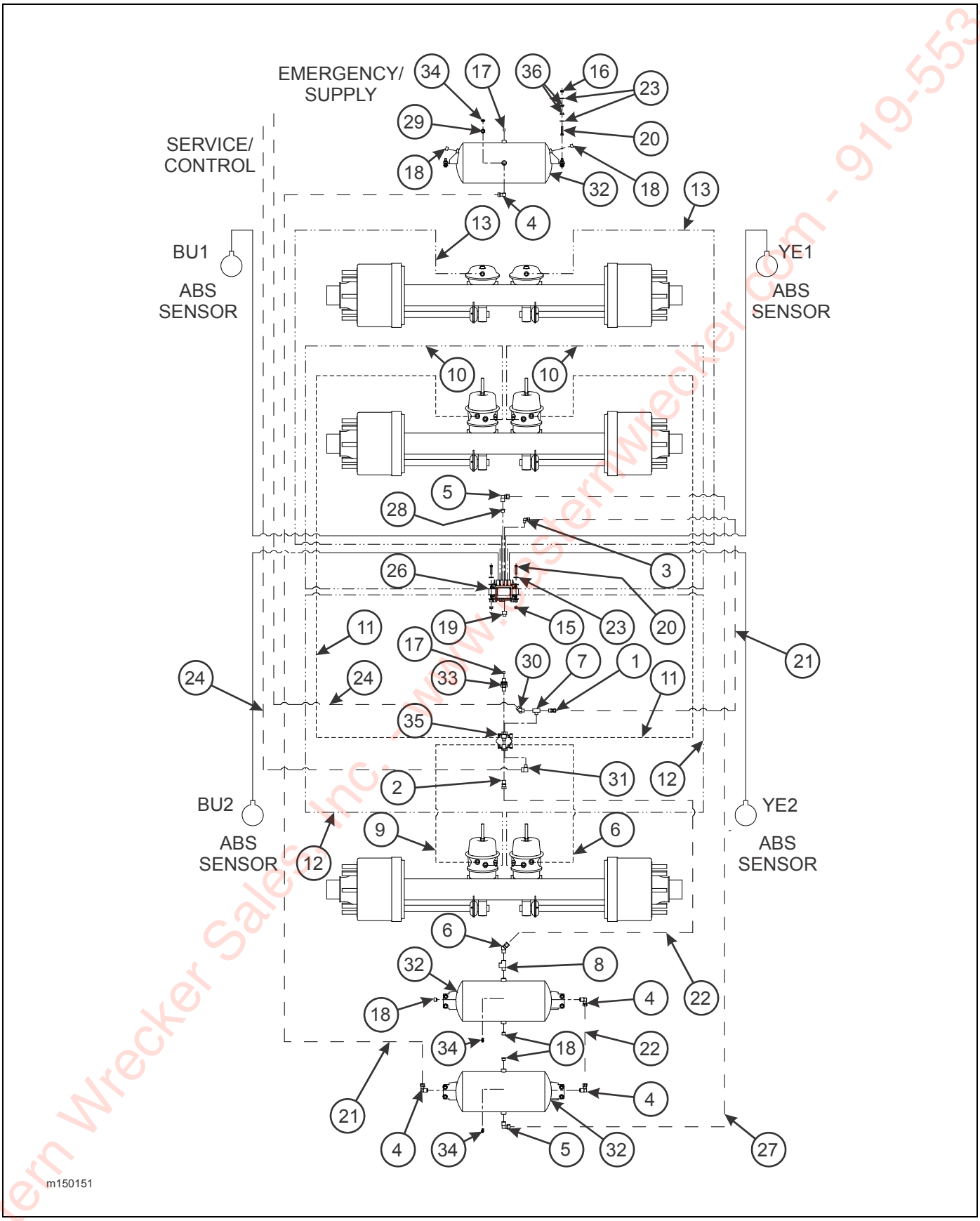

Figure 2-41: Spring Air Brake System w/ ABS (455)

Eastern Wrecker Sales, Inc. - www.easternwrecker.com - 919-553-4038

SPRING AIR BRAKE SYSTEM W/ ABS (TRIPLE)

ITEM	PART NO.	DESCRIPTION	QTY.
	150151	AIR SYSTEM U/C, ABS (455)	
1	1-297-010007-12	FITTING, AIR	1
2	1-297-010007-15	FITTING, AIR	1
3	1-297-010008-18	FITTING, AIR 90	1
4	1-297-010008-24	FITTING, AIR 90	4
5	1-297-010008-26	FITTING, AIR 90	2
6	1-297-010013-16	FITTING, AIR 45	1
7	1-297-010017-03	FITTING, AIR M/BR TEE	1
8	1-297-010018-04	FITTING, BR TEE	1
9	1-384-010038024	HOSE, AIR 3/8 X 24	2
10	1-384-010038038	HOSE, AIR 3/8 X 38	2
11	1-384-010038060	HOSE AIR 3/8 X 60	2
12	1-384-010038076	HOSE AIR 3/8 X 76	2
13	1-384-010038084	HOSE, AIR 3/8 X 84”	2
14	1-394-010001	HOSE, ABRASION SLEEVE X 2 (NOT SHOWN)	2
15	1-510-010001	NUT, FLANGE LOCK 3/8-16	2
16	1-512-010005-05	NUT, HEX LOCK 3/8-16 GRB	12
17	1-560-010002-02	PIPE PLUG 1/4	2
18	1-560-010002-04	PIPE PLUG 1/2	5
19	1-560-010002-05	PIPE PLUG 3/4-14	1
20	1-654-010051-08	SCREW, HEX HEAD CAP 3/8-16 X 1-3/4 GR5	14
21	1-833-010002	TUBING, NYLON 3/8	AR
22	1-833-010003	TUBING, NYLON 1/2	AR
23	1-861-010032-11	WASHER, FLAT 3/8W	26
24	100949	HOSE, AIR 3/8 X 222 W/ 3/8 ENDS	2
25	103817	CLAMP, HOSE (NOT SHOWN)	1
26	114586	BRAKE KIT, ABS 4S/2M (SEE PAGE 2-77)	1
27	117304	TUBING, NYLON 5/8	AR
28	118-2659-9	BUSHING 1/2 X 3/4	1
29	2081-8-4S	REDUCER PIPE	1
30	2088-6-6S	ADAPTER, 45	1
31	2089-6-6S	ADAPTER, 90	1
32	3-780-010002	TANK, AIR	3
33	55B61	FRAME UNION	1
34	56D4	AIR TANK DRAIN COCK	3
35	758-181	VALVE RELAY EMERGENCY	1
36	805-2	STEP BUSHING	24

Eastern Wrecker Sales, Inc. www.easternwrecker.com - 919-553-4038

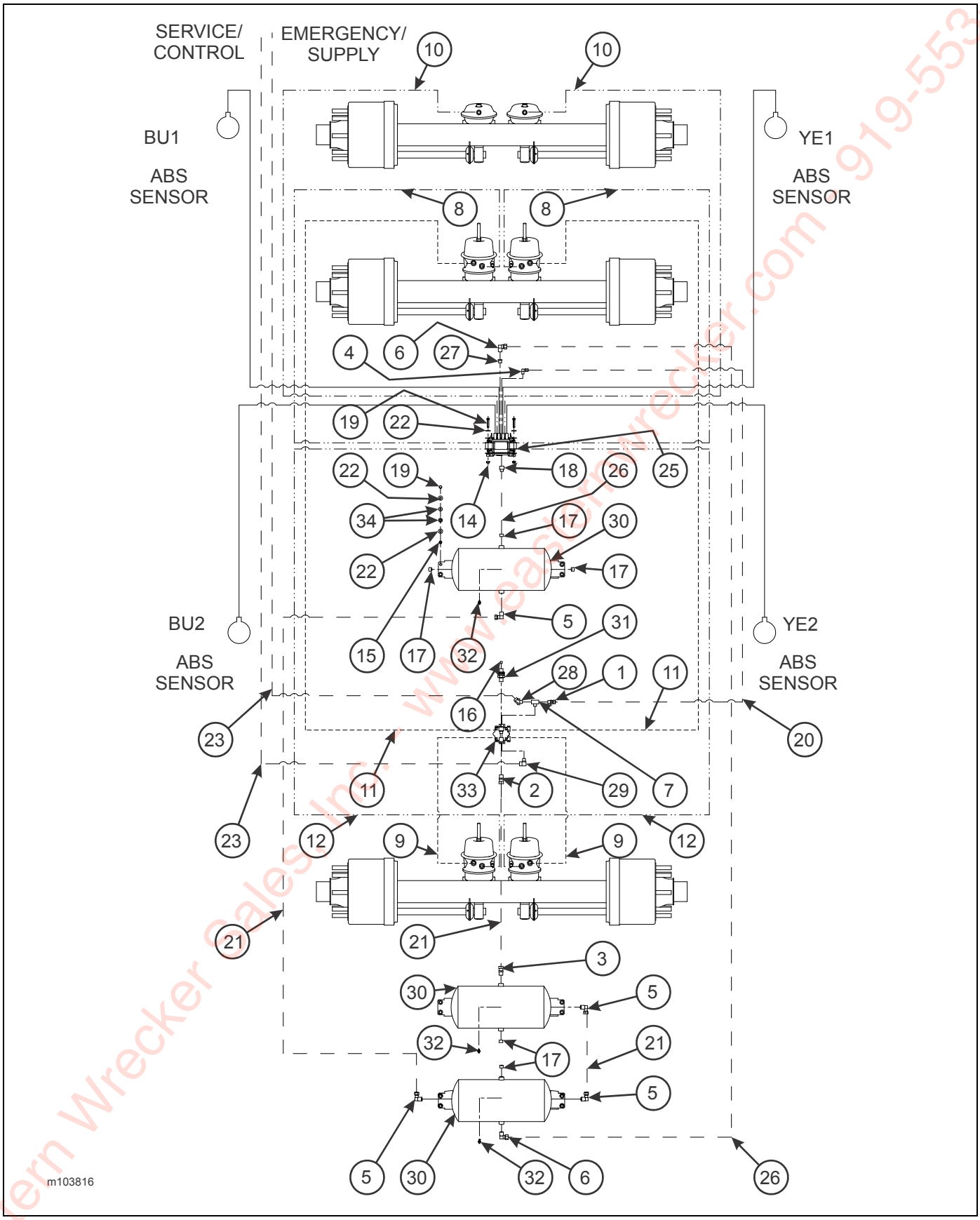

Figure 2-42: Spring Air Brake System w/ ABS (455)

Eastern Wrecker Sales Inc. - www.easternwrecker.com 919-553-4038

SPRING AIR BRAKE SYSTEM W/ ABS (NARROW TRIPLE)

ITEM	PART NO.	DESCRIPTION	QTY.
	103816	AIR SYSTEM U/C, ABS (455)	
1	1-297-010007-12	FITTING, AIR	1
2	1-297-010007-15	FITTING, AIR	1
3	1-297-010007-16	FITTING, AIR	1
4	1-297-010008-18	FITTING, AIR 90	1
5	1-297-010008-24	FITTING, AIR 90	4
6	1-297-010008-26	FITTING, AIR 90	2
7	1-297-010017-03	FITTING, AIR M/BR TEE	1
8	1-384-010038024	HOSE, AIR 3/8 X 24	2
9	1-384-010038038	HOSE, AIR 3/8 X 38	2
10	1-384-010038060	HOSE AIR 3/8 X 60	2
11	1-384-010038076	HOSE AIR 3/8 X 76	2
12	1-384-010038084	HOSE, AIR 3/8 X 84	2
13	1-394-010001	HOSE, ABRASION SLEEVE X 2 (NOT SHOWN)	2
14	1-510-010001	NUT, FLANGE LOCK 3/8-16	2
15	1-512-010005-05	NUT, HEX LOCK 3/8-16 GRB	12
16	1-560-010002-02	PIPE PLUG 1/4	2
17	1-560-010002-04	PIPE PLUG 1/2	5
18	1-560-010002-05	PIPE PLUG 3/4-14	1
19	1-654-010051-08	SCREW, HEX HEAD CAP 3/8-16 X 1-3/4 GR5	14
20	1-833-010002	TUBING, NYLON 3/8	AR
21	1-833-010003	TUBING, NYLON 1/2	AR
22	1-861-010032-11	WASHER, FLAT 3/8W	26
23	100949	HOSE, AIR 3/8 X 222 W/ 3/8 ENDS	2
24	103817	CLAMP, HOSE (NOT SHOWN)	1
25	114586	BRAKE KIT, ABS 4S/2M (SEE PAGE 2-77)	1
26	117304	TUBING, NYLON 5/8	AR
27	118-2659-9	BUSHING 1/2 X 3/4	1
28	2088-6-6S	ADAPTER, 45	1
29	2089-6-6S	ADAPTER, 90	1
30	3-780-010002	TANK, AIR	3
31	55B61	FRAME UNION	1
32	56D4	AIR TANK DRAIN COCK	3
33	758-181	VALVE RELAY EMERGENCY	1
34	805-2	STEP BUSHING	24

Eastern Wrecker Sales, Inc. www.easternwrecker.com - 919-553-4038

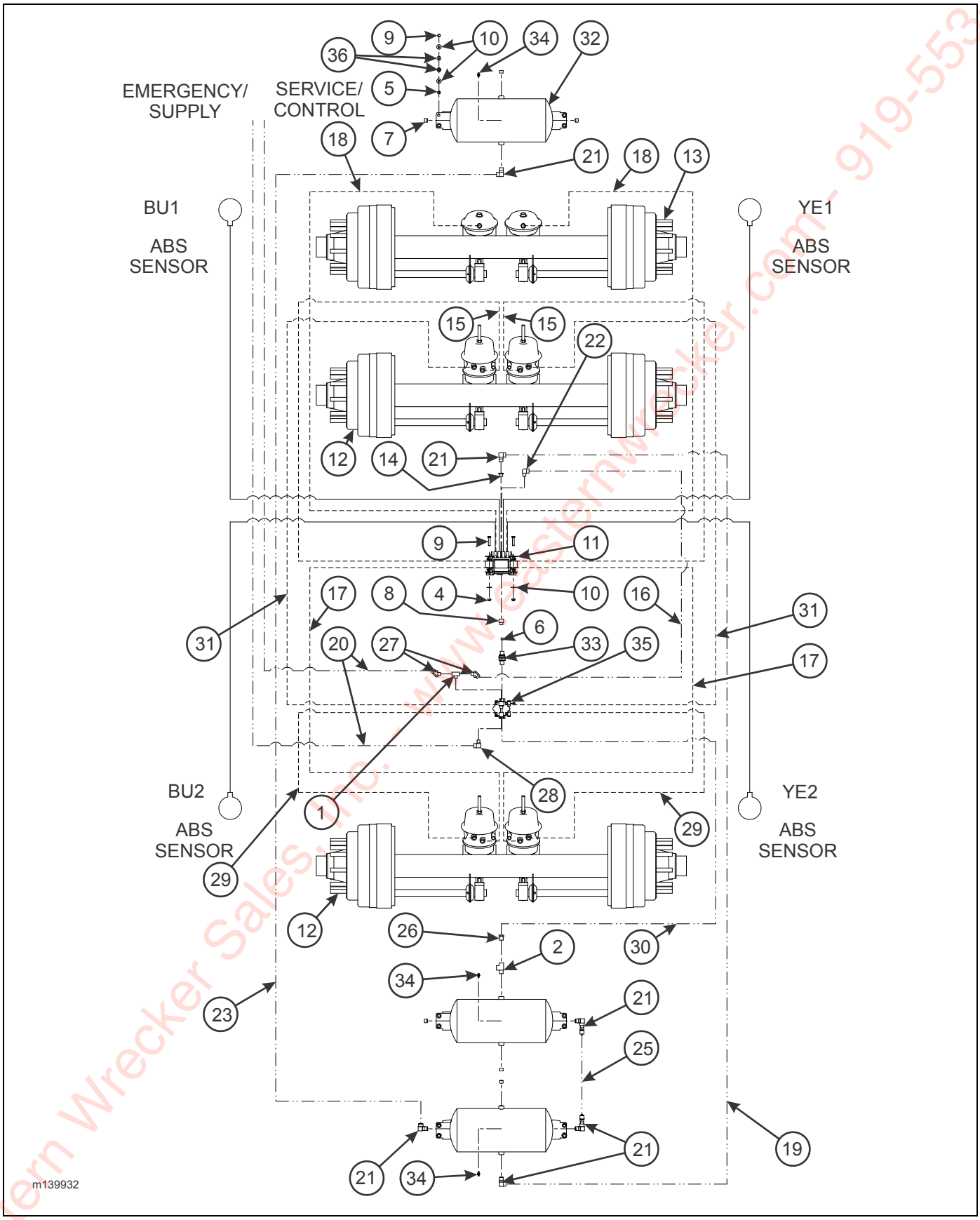

Figure 2-43: Spring Air Brake System w/ ABS Arctic (455)

Eastern Wrecker Sales, Inc. - www.easternwrecker.com - 919-553-4038

SPRING AIR BRAKE SYSTEM W/ ABS ARCTIC (TRIPLE)

ITEM	PART NO.	DESCRIPTION	QTY.
	139932	AIR SYSTEM U/C, ABS ARCTIC (455)	
1	1-297-010017-03	FITTING, AIR M/BR TEE	1
2	1-297-010018-04	FITTING BRASS PIPE STREET TEE	1
3	1-394-010001	HOSE, ABRASION SLEEVE X 2	2
4	1-510-010001	NUT, FLANGE LOCK 3/8-16	2
5	1-512-010005-05	NUT, HEX LOCK 3/8-16 GRB	12
6	1-560-010002-02	PIPE PLUG 1/4	1
7	1-560-010002-04	PIPE PLUG 1/2	6
8	1-560-010002-05	PIPE PLUG 3/4-14	1
9	1-654-010051-08	SCREW, HEX HEAD CAP 3/8-16 X 1-3/4 GR5	14
10	1-861-010032-11	WASHER, FLAT 3/8W	26
11	114586	BRAKE KIT, ABS 4S/2M (SEE PAGE 2-77)	1
12	115738	AXLE WELDMENT 2516 SPG 69 31	REF
13	115740	AXLE WELDMENT 2516 SER 69 31	REF
14	118-2659-9	BUSHING 1/2 X 3/4	1
15	126710	HOSE, AIR 3/8 X 38	2
16	126711	HOSE, AIR 3/8 X 64	1
17	126712	HOSE, AIR 3/8 X 76	2
18	126713	HOSE, AIR 3/8 X 84 ARCTIC	2
19	126715	HOSE, AIR 3/8 X 124	1
20	126716	HOSE, AIR 3/8 X 222 ARCTIC	2
21	126718	ADAPTER, 90	6
22	126719	ADAPTER, 90	1
23	139944	HOSE, AIR 3/8 X 200 ARCTIC	1
24	145515	HOSE END (NOT SHOWN)	2
25	169932	HOSE, AIR 3/8 ARCTIC	1
26	2081-8-6S	REDUCER	1
27	2088-6-6S	ADAPTER, 45	2
28	2089-6-6S	ADAPTER, 90	1
29	3-384-010049024	HOSE, AIR 3/8 X 24	2
30	3-384-010049032	HOSE, AIR 3/8 X 32	1
31	3-384-010049060	HOSE, AIR 3/8 X 60	2
32	3-780-010002	TANK, AIR	3
33	55B61	FRAME UNION	1
34	56D4	AIR TANK DRAIN COCK	3
35	758-181	VALVE RELAY EMERGENCY	1
36	805-2	STEP BUSHING	24

Eastern Wrecker Sales, Inc. - www.easternwrecker.com - 919-553-4038

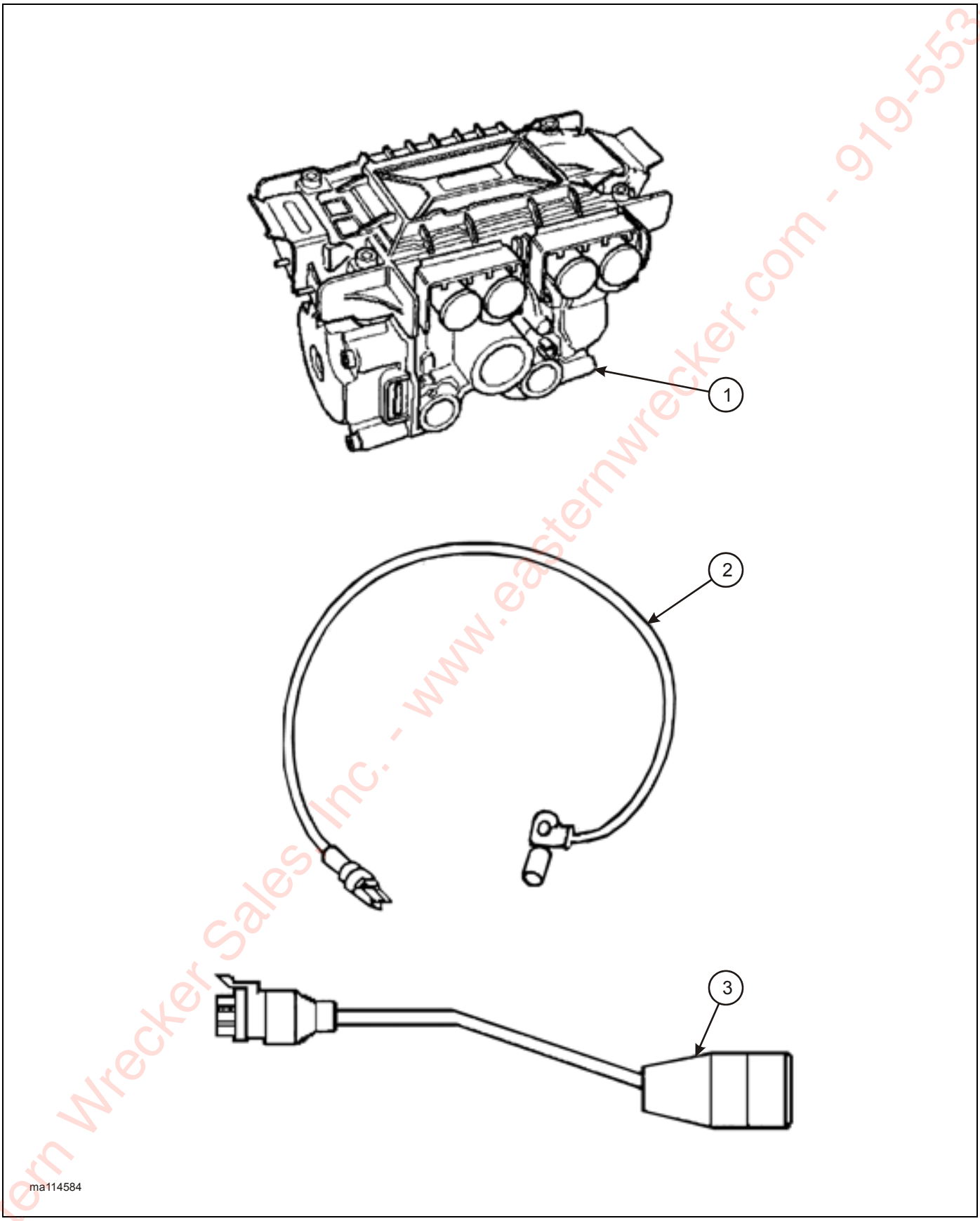

Figure 2-44: Brake Kit, Rockwell ABS

Eastern Wrecker Sales Inc. - www.easternwrecker.com - 919-553-4038

ABS BRAKE KIT

ITEM	PART NO.	DESCRIPTION	QTY.
	114584	ABS BRAKE KIT 4S/2M	
	114586	ABS BRAKE KIT 4S/2M-TRI/SPRD	
	114585	ABS BRAKE KIT 2S/1M SGL	
1	114588	ECU/VALVE ASSEMBLY (114584 & 114586)	1
	114589	ECU/VALVE ASSEMBLY (114585)	1
2	101848	SENSOR EXTENSION CABLE (6 FT) (114584 & 114585)	4
	103861	SENSOR EXTENSION CABLE (10 FT) (114586)	4
3	147464	POWER/DIAGNOSTIC CABLE 4.0M/3.0M	1

Eastern Wrecker Sales, Inc. - www.easternwrecker.com - 919-553-4038

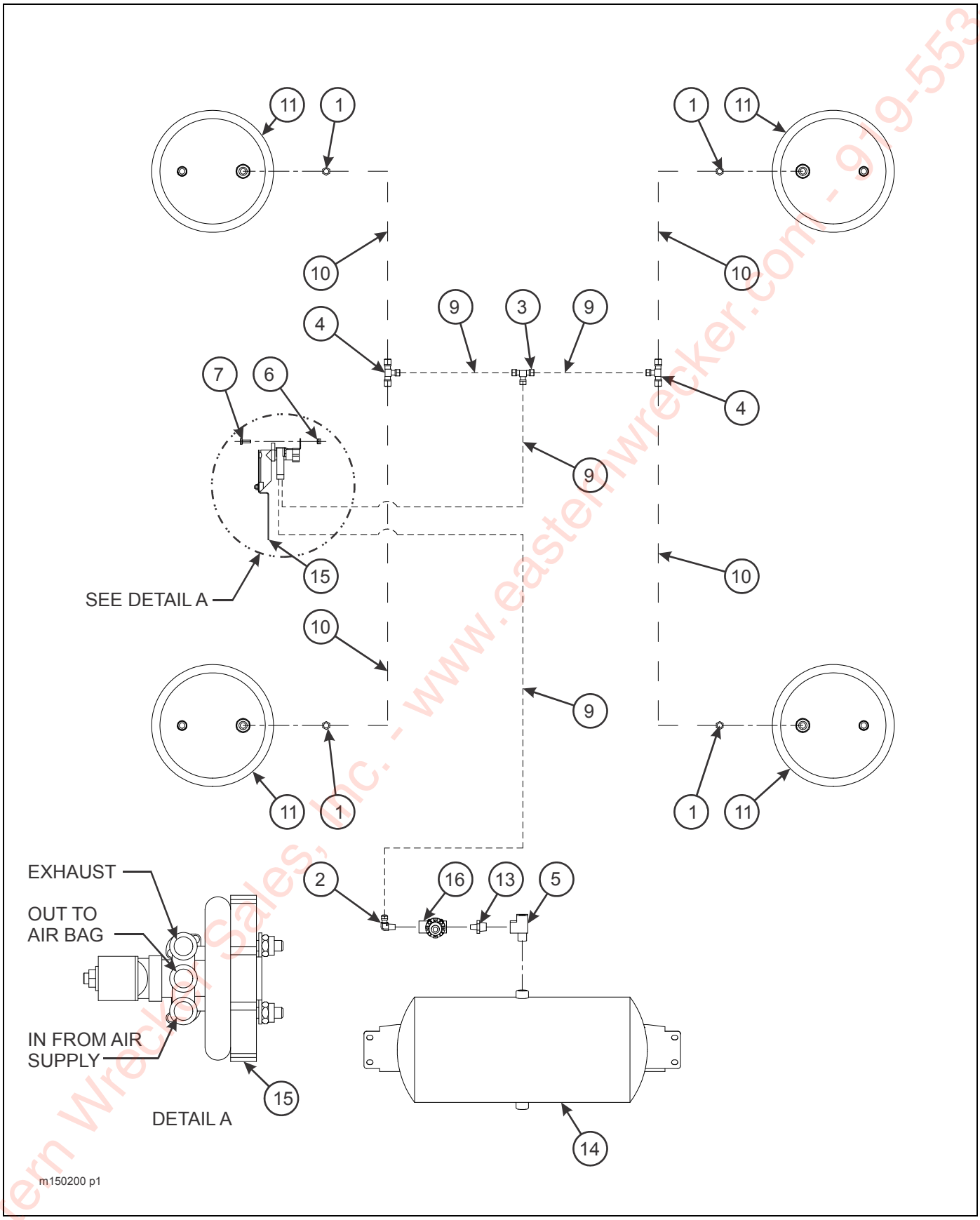

Figure 2-45: Air Ride Suspension, Air System (Tandem)

Eastern Wrecker Sales, Inc. - www.easternwrecker.com - 919-553-4038

AIR RIDE SUSPENSION AIR SYSTEM (TANDEM)

ITEM	PART NO.	DESCRIPTION	QTY.
	103082	SUSPENSION, RLU AIR RIDE (TANDEM)	
	173877	SUSPENSION, RLU AIR RIDE AQUA (TANDEM)	
1	1-297-010007-11	FITTING AIR	4
2	1-297-010008-07	FITTING AIR 90	1
3	1-297-010010-01	FITTING AIR UNION TEE	1
4	1-297-010010-04	FITTING AIR UNION TEE	2
5	1-297-010018-04	FITTING BRASS PIPE STREET TEE	1
6	1-512-010005-01	NUT, HEX LOCK 1/4-20 GRB	2
7	1-654-010047-04	SCREW, HEX HEAD CAP 1/4-20 X 3/4 GR5	2
8	1-796-010004-02	TIE STRAP PLASTIC (NOT SHOWN)	15
9	1-833-010001	TUBING NYLON 1/4 OD	AR
10	1-833-010002	TUBING NYLON 3/8 OD	AR
11	102363	SUSPENSION, ADJ RLU-228-3.5 (SEE PAGE 2-86)	REF
12	102732	AIR CONTROL KIT NEWAY (INCL ITEMS 15 & 16)(SEE PAGE 2-85)	1
	173876	AIR CONTROL VALVE INSTALLATION KIT (SEE PAGE 2-85)	1
13	2083-8-4S	NIPPLE, HEX 1/2 - 1/4	1
14	3-780-010002	TANK AIR	REF
15	900 54 007	HEIGHT CONTROL VALVE	REF
16	905-54-107	BRAKE PROTECTION VALVE	REF
	167692	FILTER	1

Eastern Wrecker Sales, Inc. - www.easternwrecker.com - 919-553-4038

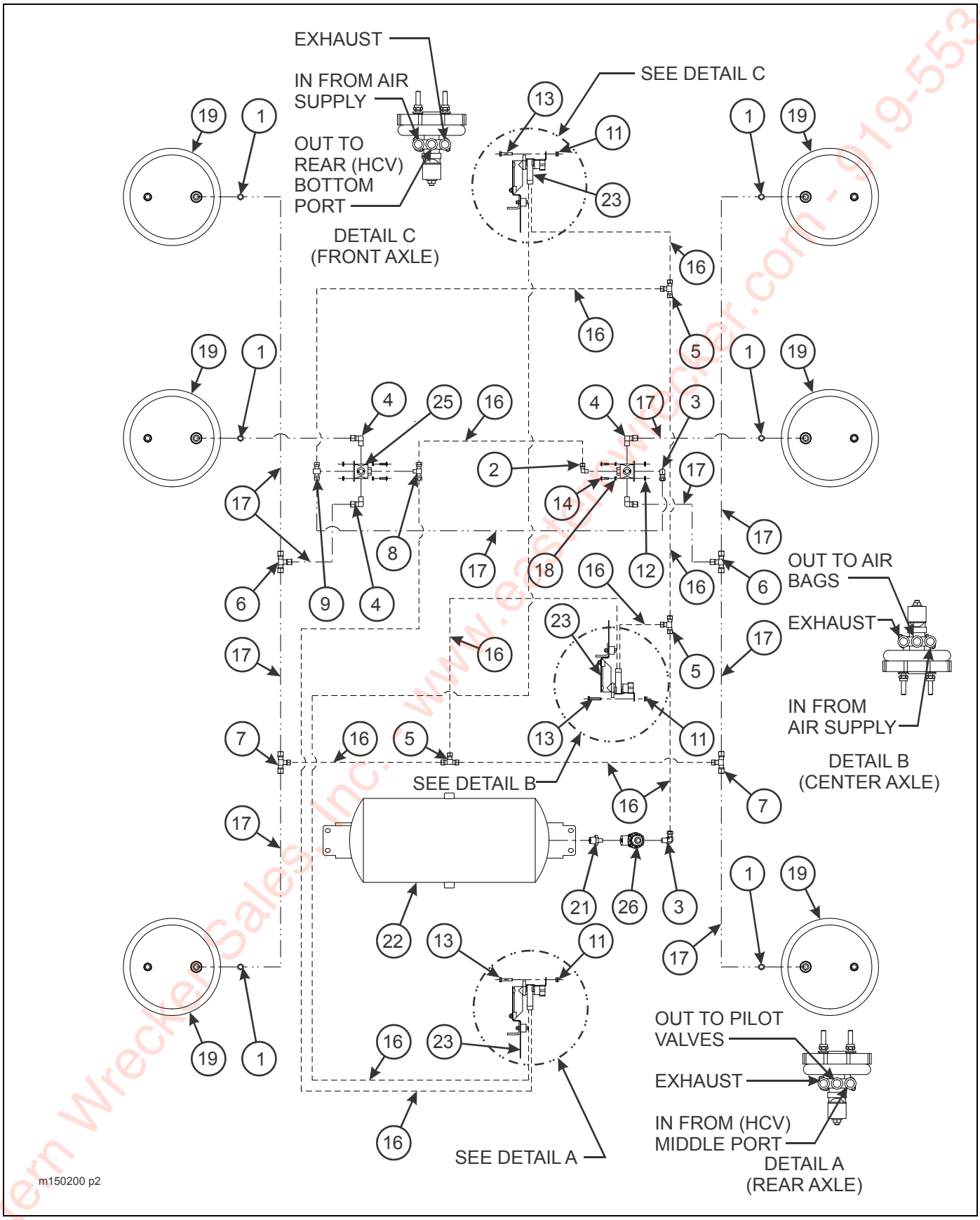

Figure 2-46: Air Ride Suspension, Air System (Triple)

Eastern Wrecker Sales, Inc. www.easternwrecker.com - 919-553-4038

AIR RIDE SUSPENSION AIR SYSTEM (TRIPLE)

ITEM	PART NO.	DESCRIPTION	QTY.
	103084	AIR RIDE, AIR SYSTEM (TRIPLE)	
1	1-297-010007-11	FITTING AIR	6
2	1-297-010008-05	FITTING AIR 90	1
3	1-297-010008-07	FITTING AIR 90	2
4	1-297-010008-18	FITTING AIR 90	4
5	1-297-010010-01	FITTING AIR UNION TEE	3
6	1-297-010010-03	FITTING AIR UNION TEE 3/8	2
7	1-297-010010-04	FITTING AIR UNION TEE	2
8	1-297-010015-02	FITTING AIR BRANCH TEE	1
9	1-297-010015-03	FITTING AIR BRANCH TEE	1
11	1-512-010005-01	NUT, HEX LOCK 1/4-20 GRB	6
12	1-512-010007-03	NUT, HEX 10-24	8
13	1-654-010047-04	SCREW, HEX HEAD CAP 1/4-20 X 3/4 GR5	6
14	1-656-010003051	SCREW RH HD MACH #10-24 X 3/4	8
15	1-796-010004-02	TIE STRAP PLASTIC (NOT SHOWN)	15
16	1-833-010001	TUBING NYLON 1/4 OD	AR
17	1-833-010002	TUBING NYLON 3/8 OD	AR
18	1-861-010034-07	WASHER, SPLIT LOCK #10	8
19	102363	SUSPENSION, ADJ RLU-228-3.5 (SEE PAGE 2-86)	REF
21	2083-8-4S	NIPPLE, HEX 1/2 - 1/4	1
22	3-780-010002	TANK AIR	REF
23	3-843-010034	VALVE AIR RIDE HEIGHT CONTROL	3
25	900-54-079	PILOT VALVE	2
26	905-54-107	BRAKE PROTECTION VALVE	1
	167692	FILTER	1

Eastern Wrecker Sales, Inc. - www.easternwrecker.com - 919-553-4038

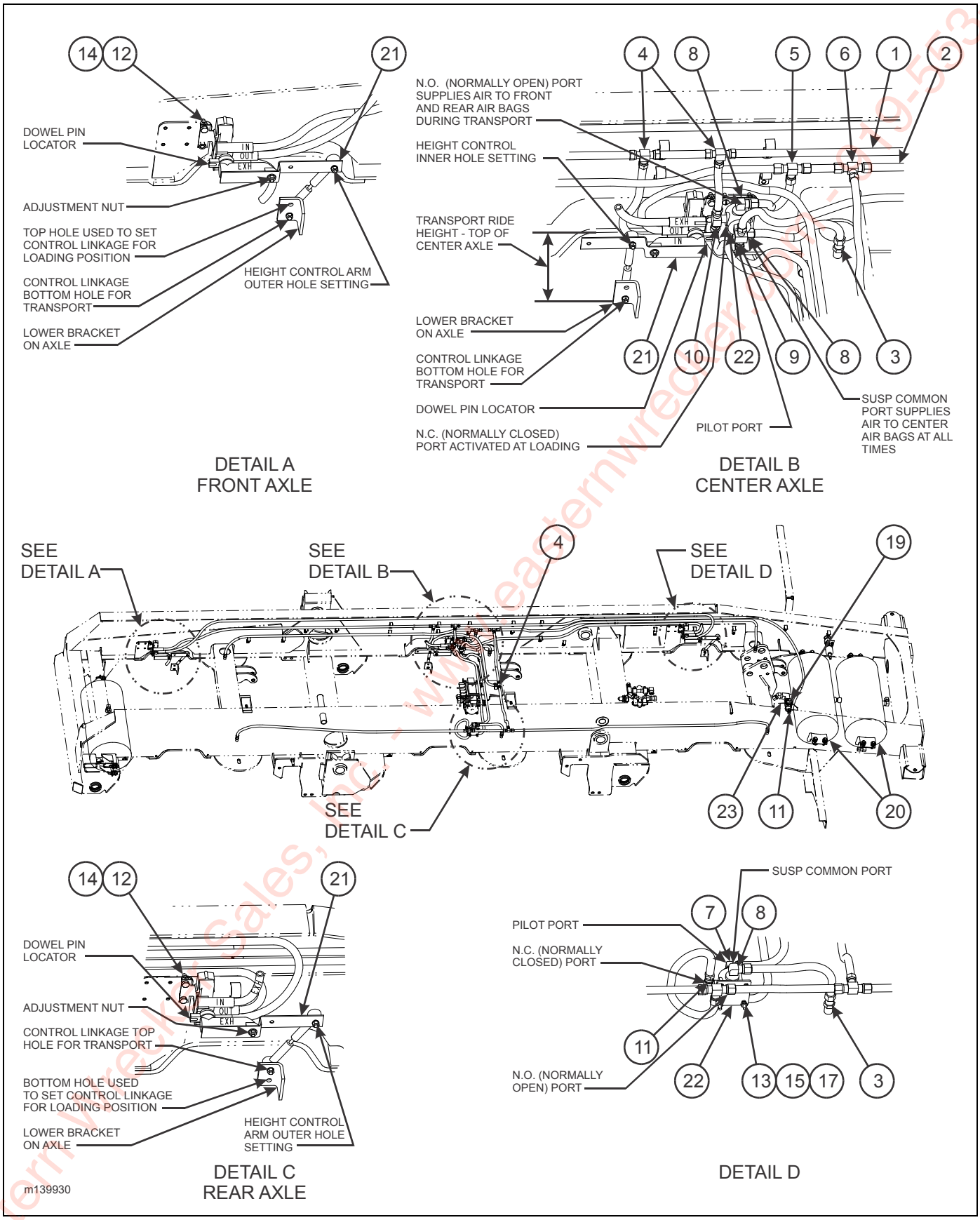

Figure 2-47: Air Ride Suspension, Air System Arctic (Triple)

Eastern Wrecker Sales, Inc. - www.easternwrecker.com - 319-553-4038

AIR RIDE SUSPENSION AIR SYSTEM ARCTIC (TRIPLE)

ITEM	PART NO.	DESCRIPTION	QTY.
	139930	AIR RIDE, AIR SYSTEM (TRIPLE)	
1	126629	TUBING NYLON 1/4 OD	AR
2	126630	TUBING NYLON 3/8 OD	AR
3	126672	FITTING, COMPRESSION STRAIGHT	6
4	126673	FITTING, COMPRESSION UNION TEE	1
5	126674	FITTING, COMPRESSION UNION TEE	2
6	126675	FITTING, COMPRESSION TEE	4
7	126676	FITTING, COMPRESSION 90	3
8	126678	FITTING, COMPRESSION 90	2
9	126679	FITTING, COMPRESSION TEE	2
10	126680	FITTING, COMPRESSION TEE	1
11	126862	FITTING, COMPRESSION STRAIGHT	1
12	1-512-010005-01	NUT, HEX LOCK 1/4-20 GRB	6
13	1-512-010007-03	NUT, HEX 10-24	8
14	1-654-010047-04	SCREW, HEX HEAD CAP 1/4-20 X 3/4 GR5	6
15	1-656-010003051	SCREW RH HD MACH #10-24 X 3/4	8
16	1-796-010004-02	TIE STRAP PLASTIC (NOT SHOWN)	15
17	1-861-010034-07	WASHER, SPLIT LOCK #10	8
18	102363	SUSPENSION, ADJ RLU-228-3.5 (NOT SHOWN) (SEE PAGE 2-86)	REF
19	2083-8-4S	NIPPLE, HEX 1/2 - 1/4	1
20	3-780-010002	TANK AIR	REF
21	3-843-010034	VALVE AIR RIDE HEIGHT CONTROL	3
22	900-54-079	PILOT VALVE	2
23	905-54-107	BRAKE PROTECTION VALVE	1
	167692	FILTER	1

Eastern Wrecker Sales, Inc. - www.easternwrecker.com - 919-553-4038

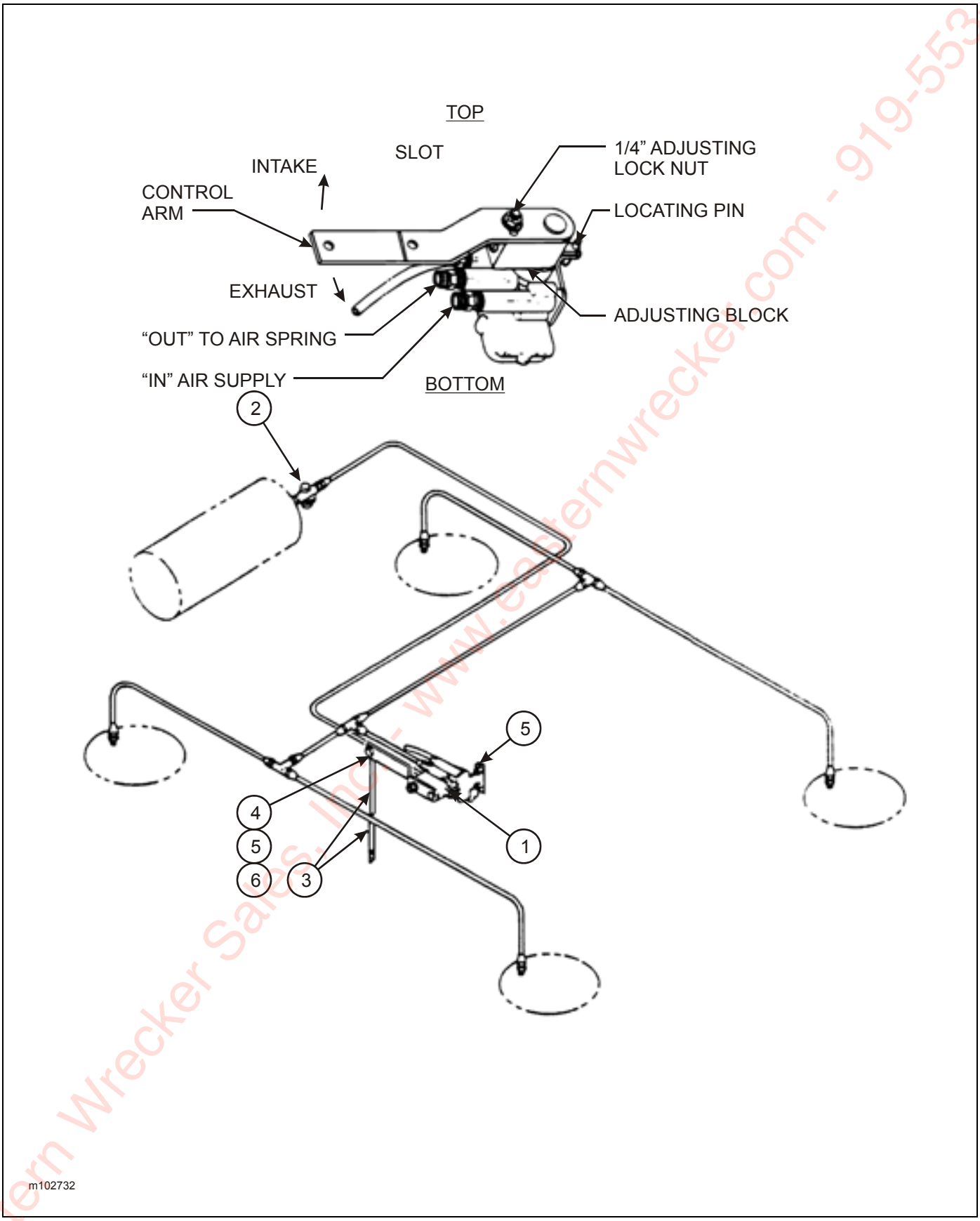

Figure 2-48: Air Control Kit

Eastern Wrecker Sales, Inc. - www.easternwrecker.com - 919-553-4038

AIR CONTROL KIT

ITEM	PART NO.	DESCRIPTION	QTY.
	102732	AIR CONTROL KIT NEWAY	
	173876	AIR CONTROL KIT NEWAY	
1	900 54 007	HEIGHT CONTROL VALVE (INCLUDES HARDWARE BAG)	1
	905-54-186	HEIGHT CONTROL VALVE (VALVE ONLY)	1
	173875	HEIGHT CONTROL VALVE (USED W/ 173876)	1
2	905-54-107	AIR PRESSURE PROTECTION VALVE & FILTER	1
	167692	FILTER	1
3	111021	SRK - 167 KIT (ADJ. LINK ASSEMBLY)	1
4	1-654-010047-04	SCREW, HEX HEAD CAP 1/4-20 X 3/4 GR5	2
5	1-512-010005-01	LOCK NUT 1/4-20	2
6	-----	DECAL (OPERATING)	1

Eastern Wrecker Sales, Inc. - www.easternwrecker.com - 919-553-4038

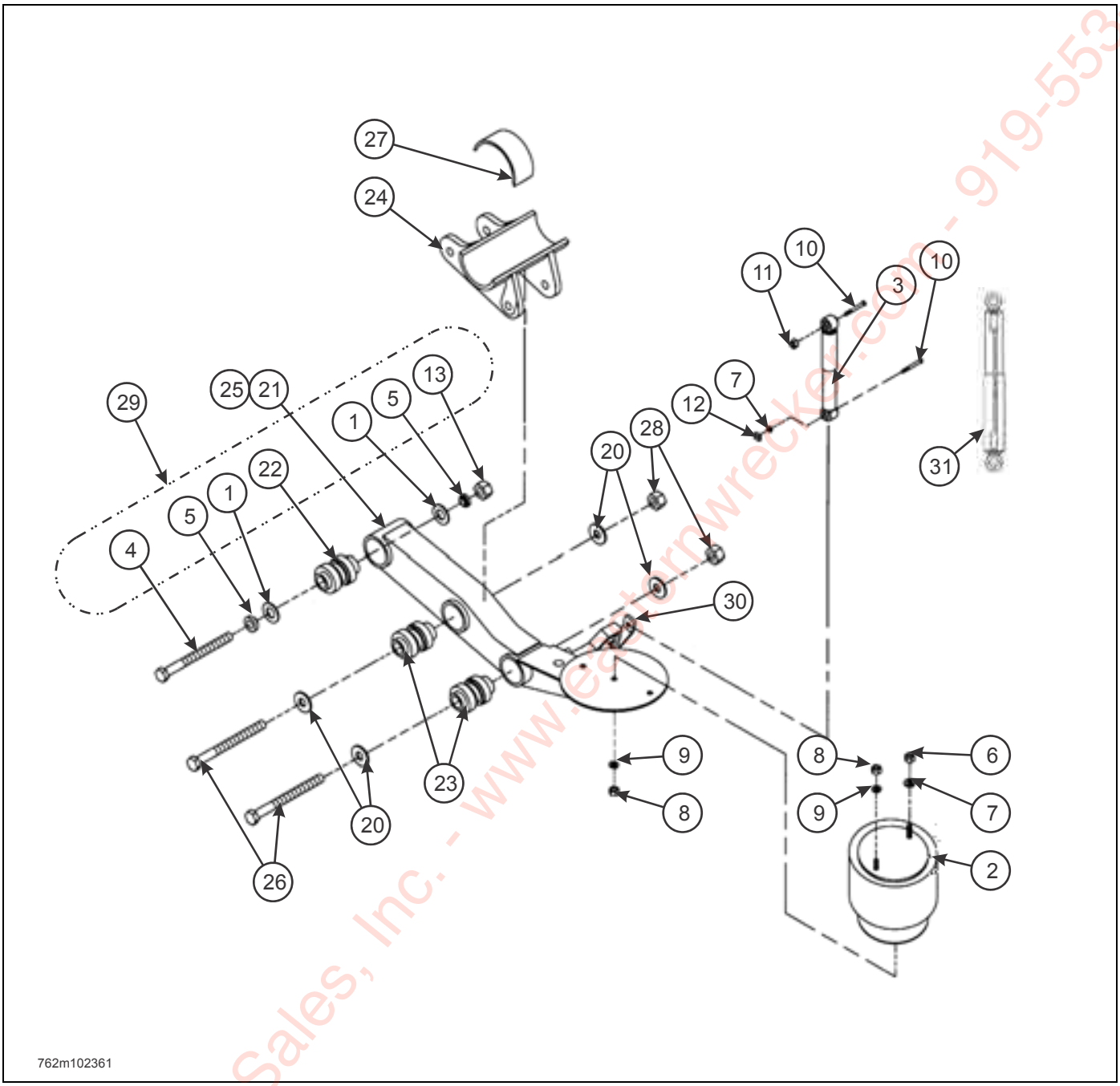

Figure 2-49: Suspension Hanger RLU-228

SUSPENSION HANGER RLU-228

ITEM	PART NO.	DESCRIPTION	QTY.
	102363	SUSPENSION, ADJ. RLU-228-3.5 (INCL ITEMS 1-19)	
	102364	SUSPENSION, ADJ. RLU-228-5.5 (INCL ITEMS 1-19)	
	102361	SUSPENSION, BEAM. RLU-228 (INCL ITEMS 20-28)	
1	111010	FLAT WASHER	2
2	905-57-129	AIR SPRING ASSEMBLY (102363)	2
	111016	AIR SPRING ASSEMBLY (102364)	2
3	900 45 040	SHOCK (102363)	2
	111017	SHOCK (102364)	2

Eastern Wrecker Sales, Inc. - www.easternwrecker.com - 919-553-4038

SUSPENSION HANGER RLU-228

ITEM	PART NO.	DESCRIPTION	QTY.
4	90508009	ALIGN BUSH ASSEMBLY (CONSISTS OF:)	2
	-----	ROD BOLT	1
	-----	ALIGN BLOCK	1
5	129006	ALIGN BLOCK	2
6	934 00 149	3/4-16 HEX NUT GRB	2
7	936 00 077	LOCK WASHER, 3/4"	4
8	1-512-010007-09	HEX NUT, 1/2-13	4
9	1-861-010034-13	LOCK WASHER, 1/2"	4
10	105408	HEX HEAD CAP SCREW 3/4-10 X 3-1/2	4
11	934 00 492	LOCK NUT, 3/4-10	2
12	111022	3/4-10 SQUARE NUT	2
13	111008	LOCK NUT 1-1/8-7	2
14	111018	ANCHOR, RIDE HEIGHT CONTROL VALVE (NOT SHOWN)	1
15	-----	LITERATURE INSTRUCTIONS (NOT SHOWN)	1
16	-----	LITERATURE SPEC (NOT SHOWN)	1
17	-----	LITERATURE FORM 864 (NOT SHOWN)	1
18	-----	LITERATURE LABEL (NOT SHOWN)	1
19	-----	LITERATURE LABEL (NOT SHOWN)	1
19A	111019	FASTENER KIT (INCL. 1, 4-11, 13, 15)	1
20	111010	FLAT WASHER	8
21	111013	EQUALIZING BEAM ASSEMBLY LH	1
22	900-08-139	RUBBER BUSHING (FRONT PIVOT)	2
23	111011	RUBBER BUSHING (AXLE CONNECTION)	4
24	111012	AXLE ADAPTER ASSEMBLY	2
25	111014	EQUALIZING BEAM ASSEMBLY RH	1
26	111023	HEX HEAD CAP SCREW 1-1/8-7 X 8-1/2	4
27	900-25-288	SAFETY STRAP	2
28	934-00-506	LOCK NUT 1-1/8-7	4
29	109533	ALIGNMENT BLOCK KIT	1
30	126900	BRACKET BOTTOM SHOCK (RLU-228)	1

NOTE: QUANTITIES LISTED ARE PER AXLE.
3-1/2” RIDE HEIGHT USED ON 12-1/2” X 7-1/2” BRAKE AXLES
5-1/2” RIDE HEIGHT USED ON 16-1/2” X 7” BRAKE AXLES

141708	WIRE ROPE STRAP KIT 1 AX RLU228-3.5
127708	WIRE ROPE STRAP KIT 1 AX RLU228-5.5
179103	WIRE ROPE STRAP KIT 2 AX RLU228-3.5
179104	WIRE ROPE STRAP KIT 2 AX RLU228-5.5
141709	WIRE ROPE STRAP KIT 3 AX RLU228-3.5
162403	WIRE ROPE STRAP KIT 3 AX RLU228-5.5

NOTE: ALL WIRE ROPE STRAP KITS INCLUDE STRAPS AND HARDWARE REQUIRED.

Eastern Wrecker Sales, Inc. - www.easternwrecker.com - 919-553-4038

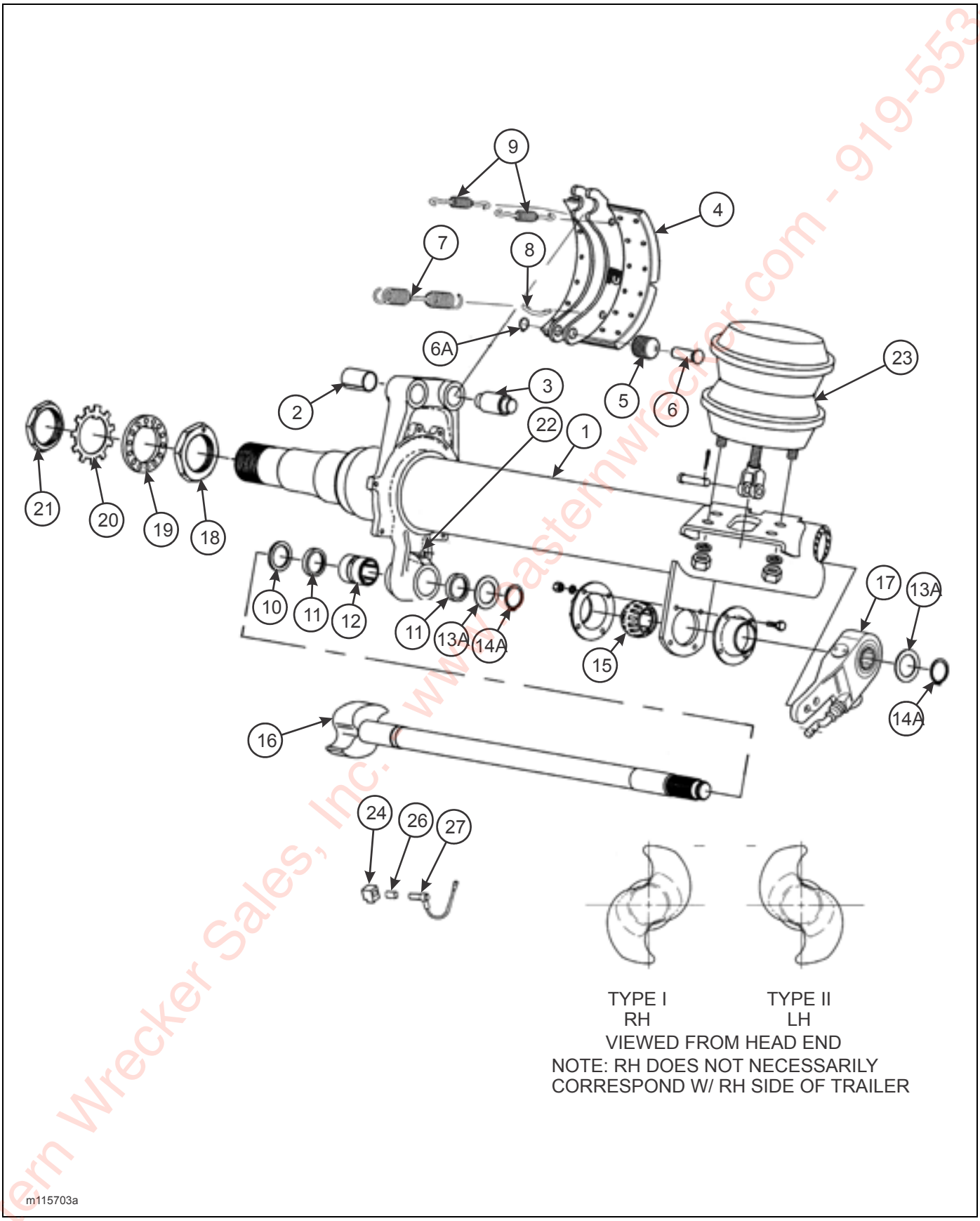

Figure 2-50: Axle and Brake Assembly (12-1/4 x 7-1/2")

Eastern Wrecker Sales, Inc. www.easternwrecker.com - 919-553-4038

AXLE AND BRAKE ITEMS (DEXTER) (12-1/4” X 7-1/2”)

ITEM	PART NO.	REFERENCE NO.	DESCRIPTION	QTY.
	115703		AXLE 70-1/2, 12-1/4 X 7-1/2 SPG BRK (25K)	
	115708		AXLE 70-1/2, 12-1/4 X 7-1/2 SRVC BRK (25K)	
	136202		AXLE 70-1/2, 12-1/4 X 7-1/2 SPG BRK (25K)	
	138197		AXLE 70-1/2, 12-1/4 X 7-1/2 SRVC BRK (25K)	
	133794		AXLE 88.5 12.25 X 7.5 SPRING BRAKE (25K)	
	142511		AXLE 88.5 12.25 X 7.5 SERVICE BRAKE (25K)	
	**K71-460-00	**K71-460-00	BRAKE SHOE HARDWARE KIT (ITEMS 2, 3, 5, 6, 6A, 7, & 8)	
2**	-----	014-068-00	BUSHING, SPIDER ANCHOR PIN	4
3**	-----	056-017-00	PIN, ANCHOR	4
4	040-320-01	040-320-01	SHOE AND LINING ASSEMBLY	4
4A	-----	041-060-01	LINING - BRAKE BLOCK CAM	2
4B	-----	041-057-01	LINING - BRAKE BLOCK ANCHOR	4
	-----	K71-133-00	BRAKE BLOCK KIT	4
5**	-----	014-057-00	ROLLER	4
6**	-----	056-010-00	RETAINER, ROLLER PIN	8
6A**	-----	069-018-00	RETAINER RING	8
7**	-----	046-092-00	SPRING, SHOE RETRACTOR	2
8**	056-018-00	056-018-00	RETAINER PIN RETRACTOR SPRING	4
9**	046-097-00	046-097-00	KEEPER SPRING	4
	***K71-101-00	**K71-101-00	CAMSHAFT REPAIR KIT (ITEMS 10-15, & 22)	
10***	005-074-00	005-074-00	D” WASHER - CAMSHAFT	2
11***	010-052-00	010-052-00	SEAL GREASE	4
12***	-----	014-056-00	BUSHING CAMSHAFT SPIDER	2
13A***	-----	005-134-00	WASHER CAMSHAFT END	2
14A***	069-078-00	069-078-00	RETAINER, CAMSHAFT END	2
15***	-----	014-058-00	BUSHING CAMSHAFT SUPPORT	2
16	034-188-03	034-188-03	CAMSHAFT, 22-5/16” LH	1
	034-189-03	034-189-03	CAMSHAFT, 22-5/16” RH	1
	171963	034-188-09	CAMSHAFT, 26-1/2” LH	1
	171964	034-189-09	CAMSHAFT, 26-1/2” RH	1
17	156655	055-040-99	SLACK ADJUSTER, AUTOMATIC	2
18	006-114-00	006-114-00	NUT, INNER SPINDLE	2
19	005-098-00	005-098-00	WASHER, SPINDLE LOCK	2
20	005-099-00	005-099-00	WASHER, TABBED SPINDLE LOCK	2
21	006-115-00	006-115-00	NUT, OUTER SPINDLE	2
22***	-----	061-006-00	FITTING, GREASE 45°	2
23	034-058-07	034-058-07	AIR CHAMBER, SPRING BRAKE	2
	034-057-07	034-057-07	AIR CHAMBER, SERVICE BRAKE	2
24	103805	024-100-00	SENSOR BLOCK	2
26	144979	097-002-00	RETAINER CLIP	2
27	139287	094-007-00	ABS SENSOR, 90	2

* WHEN ORDERING THE BEAM WITH SPINDLE, SPIDER, AND BRACKETS ATTACHED, YOU WILL NEED THE BEAM NUMBER, TRACK LENGTH, BRAKE SIZE, AND CAMSHAFT LENGTH.

** THESE PARTS ARE AVAILABLE AS PART OF THE BRAKE SHOE REPAIR KIT LISTED

*** THESE PARTS ARE AVAILABLE AS PART OF THE CAMSHAFT REPAIR KIT LISTED

NOTE: FOR HUB AND DRUM INFORMATION, SEE PAGE 2-93

Eastern Wrecker Sales, Inc. www.easternwrecker.com 519-553-4038

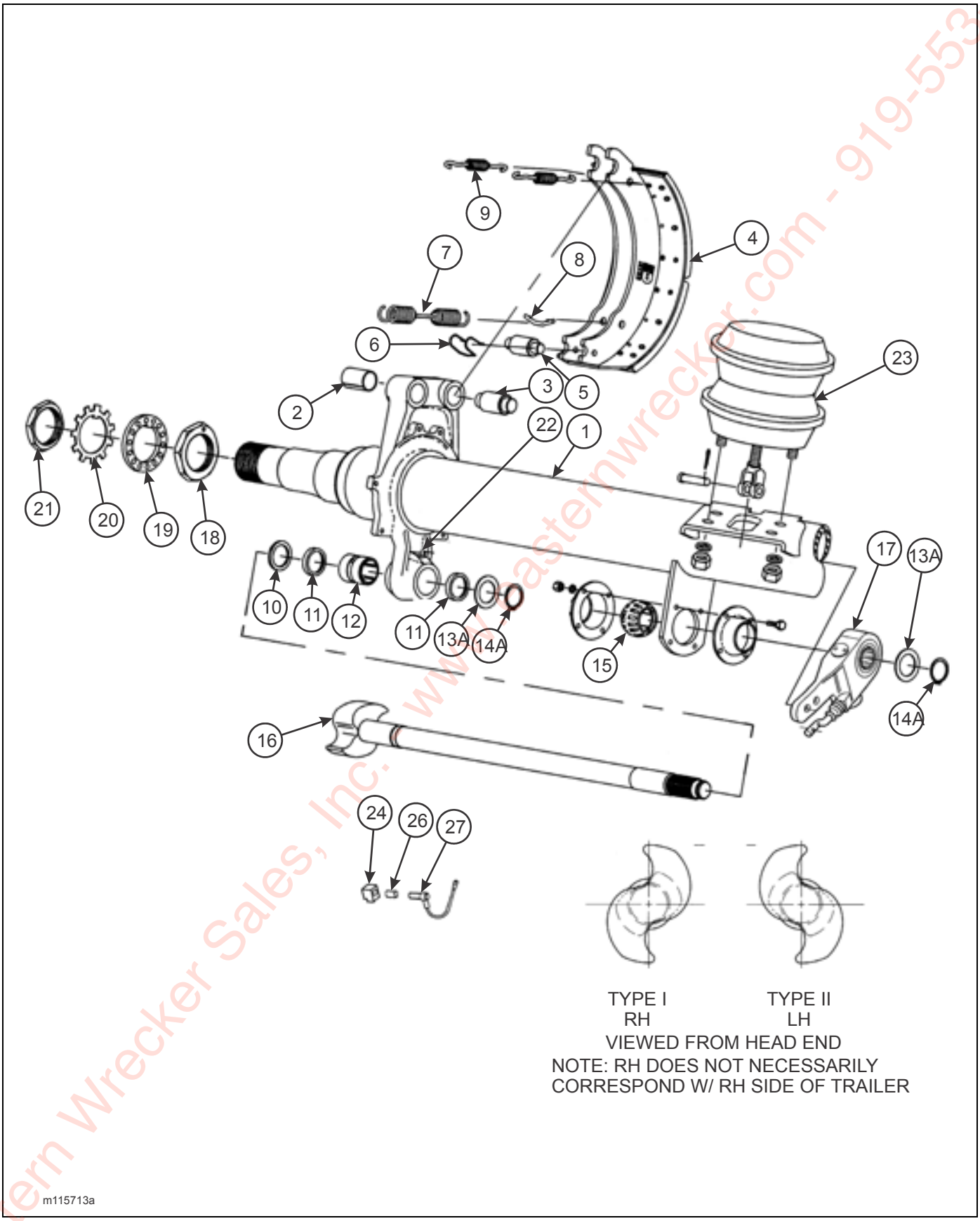

Figure 2-51: Axle and Brake Assembly (16-1/2" x 7")

Eastern Wrecker Sales, Inc. www.easternwrecker.com - 919-553-4038

AXLE AND BRAKE ITEMS (DEXTER) (16-1/2” x 7”)

ITEM	PART NO.	REFERENCE NO.	DESCRIPTION	QTY.
	115713		AXLE 69, 16-1/2 X 7 SPRING BRAKE (25K)	
	115719		AXLE 69, 16-1/2 X 7 SERVICE BRAKE (25K)	
	138203		AXLE 69 16.5 X 7 SPRING BRAKE (25K)	
	138958		AXLE 69 16.5 X 7 SERVICE BRAKE(25K)	
	138955		AXLE 75 16.5 X 7 SPRING BRAKE (25K)	
	138959		AXLE 75 16.5 X 7 SERVICE BRAKE (25K)	
1A*	-----	D-2H16	BEAM W/ BRACKETS	1
	**K71-136-00	**K71-136-00	BRAKE SHOE HARDWARE KIT (ITEMS 2, 3, 5, 6, 7, 8, & 9)	
2**	-----	014-068-00	BUSHING, SPIDER ANCHOR PIN	4
3**	-----	056-017-00	PIN, ANCHOR	4
4	040-180-00	040-180-00	SHOE AND LINING ASSEMBLY	4
4A	-----	041-058-01	LINING - BRAKE BLOCK CAM	2
4B	-----	041-059-01	LINING - BRAKE BLOCK ANCHOR	4
	-----	K71-138-00	BRAKE BLOCK KIT	4
5**	014-065-00	014-065-00	ROLLER	4
6**	071-122-00	071-122-00	RETAINER, ROLLER	4
7**	046-096-00	046-096-00	SPRING, SHOE RETRACTOR	2
8**	056-018-00	056-018-00	RETAINER PIN RETRACTOR SPRING	4
9**	046-097-00	046-097-00	KEEPER SPRING	4
	138090	***K71-135-00	CAMSHAFT REPAIR KIT (ITEMS 10-15, & 22)	
10***	005-096-00	005-096-00	WASHER CAMSHAFT	2
11***	010-052-00	010-052-00	SEAL GREASE	4
12***	-----	014-056-00	BUSHING CAMSHAFT SPIDER	2
13A***	-----	005-134-00	WASHER CAMSHAFT END	2
14A***	069-078-00	069-078-00	RETAINER, CAMSHAFT END	2
15***	-----	014-058-00	BUSHING CAMSHAFT SUPPORT	2
16	034-192-05	034-192-05	CAMSHAFT, 22-5/8” LH	1
	034-193-05	034-193-05	CAMSHAFT, 22-5/8” RH	1
	137461	034-192-08	CAMSHAFT, 25" LH	1
	137485	034-193-08	CAMSHAFT, 25" RH	1
17	139383	055-040-98	SLACK ADJUSTER, AUTOMATIC)	2
18	006-114-00	006-114-00	NUT, INNER SPINDLE	2
19	005-098-00	005-098-00	WASHER, SPINDLE LOCK	2
20	005-099-00	005-099-00	WASHER, TABBED SPINDLE LOCK	2
21	006-115-00	006-115-00	NUT, OUTER SPINDLE	2
22***	-----	061-006-00	FITTING, GREASE 45°	2
23	034-058-01	034-058-01	AIR CHAMBER, SPRING BRAKE	4
	034-057-01	034-057-01	AIR CHAMBER, SERVICE BRAKE	2
24	103805	024-100-00	SENSOR BLOCK	2
26	144979	097-002-00	RETAINER CLIP	2
27	139287	097-007-00	ABS SENSOR, 90	2

* WHEN ORDERING THE BEAM WITH SPINDLE, SPIDER, AND BRACKETS ATTACHED, YOU WILL NEED THE BEAM NUMBER, TRACK LENGTH, BRAKE SIZE, AND CAMSHAFT LENGTH.

** THESE PARTS ARE AVAILABLE AS PART OF THE BRAKE SHOE REPAIR KIT LISTED

*** THESE PARTS ARE AVAILABLE AS PART OF THE CAMSHAFT REPAIR KIT LISTED

NOTE: FOR HUB AND DRUM INFORMATION, SEE PAGE 2-93

Eastern Wrecker Sales, Inc. www.easternwrecker.com 919-553-4038

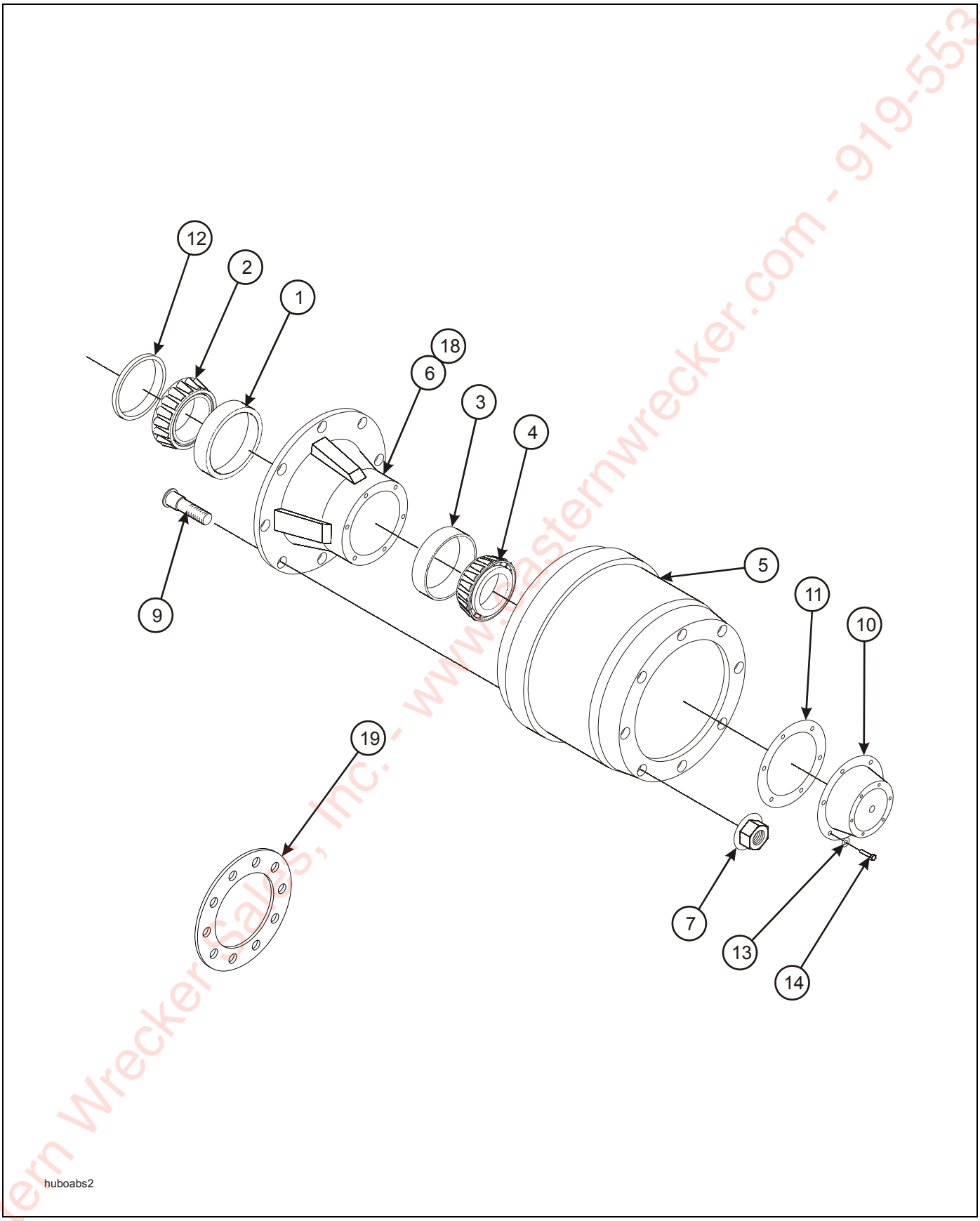

Figure 2-52: Outboard Pilot Mount Hub and Drum

Eastern Wrecker Sales, Inc. - www.easternwrecker.com - 919-553-4038

OUTBOARD PILOT MOUNT HUB AND DRUM

ITEM	PART NO.	DESCRIPTION	QTY.
1	HM218210	INNER BEARING CUP	1
2	HM218248	INNER BEARING CONE	1
3	HM212011	OUTER BEARING CUP	1
4	HM212049	OUTER BEARING CONE	1
5	63680	OUTBOARD MOUNTED BRAKE DRUM (12-1/4” x 7-1/2”)	1
	110976	OUTBOARD MOUNTED BRAKE DRUM (16-1/2” x 7”)	
6	112492	HUB IRON (8 BOLT) 100 TH TONER RING (12-1/4” x 7-1/2”)	1
	110975	HUB IRON (10 BOLT) 100 TH TONER RING (16-1/2” x 7”)	1
7	179933	NUT, HEX M22 X 1.5	8
9	113536	STUD	8
10	4009	CAP HUB	1
11	3067	GASKET OIL CAP	1
12	3-659-010012	SEAL	1
13	1-861-010034-10	WASHER, SPLIT LOCK 5/16	6
14	1-654-010049-03	SCREW, HEX HEAD CAP 5/16-18 X 3/4 GR5	6
15	100402	WHEEL, ALUM PILOT MOUNT 17.5 X 6.75	1
	3-870-010097	WHEEL, DISC PILOT MOUNT 17.5 X 6.75	1
	112047	WHEEL, ALUMINUM PILOT 17.5 X 6.75 MACH (NOT SHOWN)	1
16	TR573	VALVE STEM - STEEL WHEEL (NOT SHOWN)	1
	100401	VALVE STEM TR543C (NOT SHOWN)	1
17	1-843-010014	VALVE, EXTENSION, STEM 3” (NOT SHOWN)	1
18	*	ABS TONE RING	1
19	**114619	WHEEL GUARD 8 HOLE 275 MM BC (NOT SHOWN)(USED W/ ALUMINUM WHEELS)	
	**3-870-010107	WHEEL GUARD 10 HOLE 285.75MM BC (NOT SHOWN)	
20	142549	HUBODOMETER W/ BRACKET 10R17.5 TIRE (NOT SHOWN)	
	142551	HUBODOMETER W/ BRACKET 215/75R17.5 TIRE (NOT SHOWN)	
	142550	HUBODOMETER W/ BRACKET 235/75R17.5 TIRE (NOT SHOWN)	
	137108	HUBODOMETER W/ BRACKET 255/70R22.5 TIRE (NOT SHOWN)	

*THIS PART SHOULD BE REPLACED IN CONJUNCTION WITH THE HUB. IT SHOULD NEVER BE SOLD SEPARATELY.

**USE BETWEEN STEEL DRUM OR WHEEL AND ALUMINUM WHEEL.

Eastern Wrecker Sales, Inc. - www.easternwrecker.com - 919-553-4038

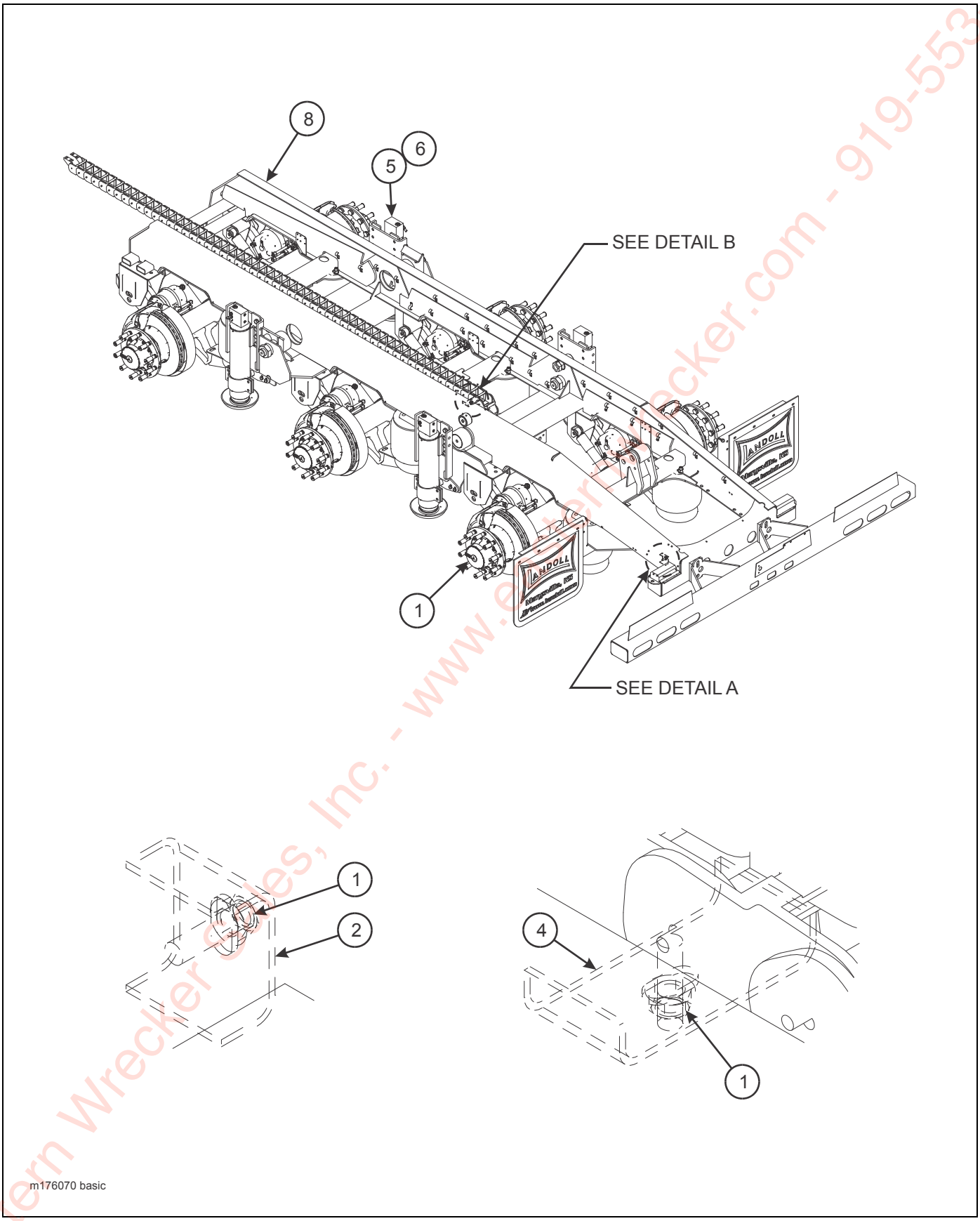

Figure 2-53: Disk Brake Suspension, Basic Assembly

Eastern Wrecker Sales, Inc. - www.easternwrecker.com - 919-553-4038

DISC BRAKE SUSPENSION, BASIC ASSEMBLY

ITEM	PART NO.	DESCRIPTION	QTY.
	176070	SUSPENSION ASSEMBLY, DISC BRAKE	REF
1	1-510-010001	NUT, FLANGE LOCK 3/8-16	4
2	2-181-010001	HOSE CLAMP	4
3	103084	SUSPENSION, AIR SYS TRIDEM (SEE PAGE 2-81)	1
4	103817	CLAMP, HOSE	1
5	121498	DOCK LEVELER ASSEMBLY (SEE PAGE 2-231)	1
6	126537	DOCK LEVELER ASSEMBLY (SEE PAGE 2-241)	1
7	175754	AXLE, DISC SPRING BRAKE 75-1/2” 16-1/2” 25K TIS (SEE PAGE 2-105)	3
8	176072	SUSPENSION WELDMENT, DISC BRAKE (455-108)	1
9	176865	AIR SYSTEM, U/C ABS (SEE PAGE 2-103)	1

Eastern Wrecker Sales, Inc. - www.easternwrecker.com - 919-553-4038

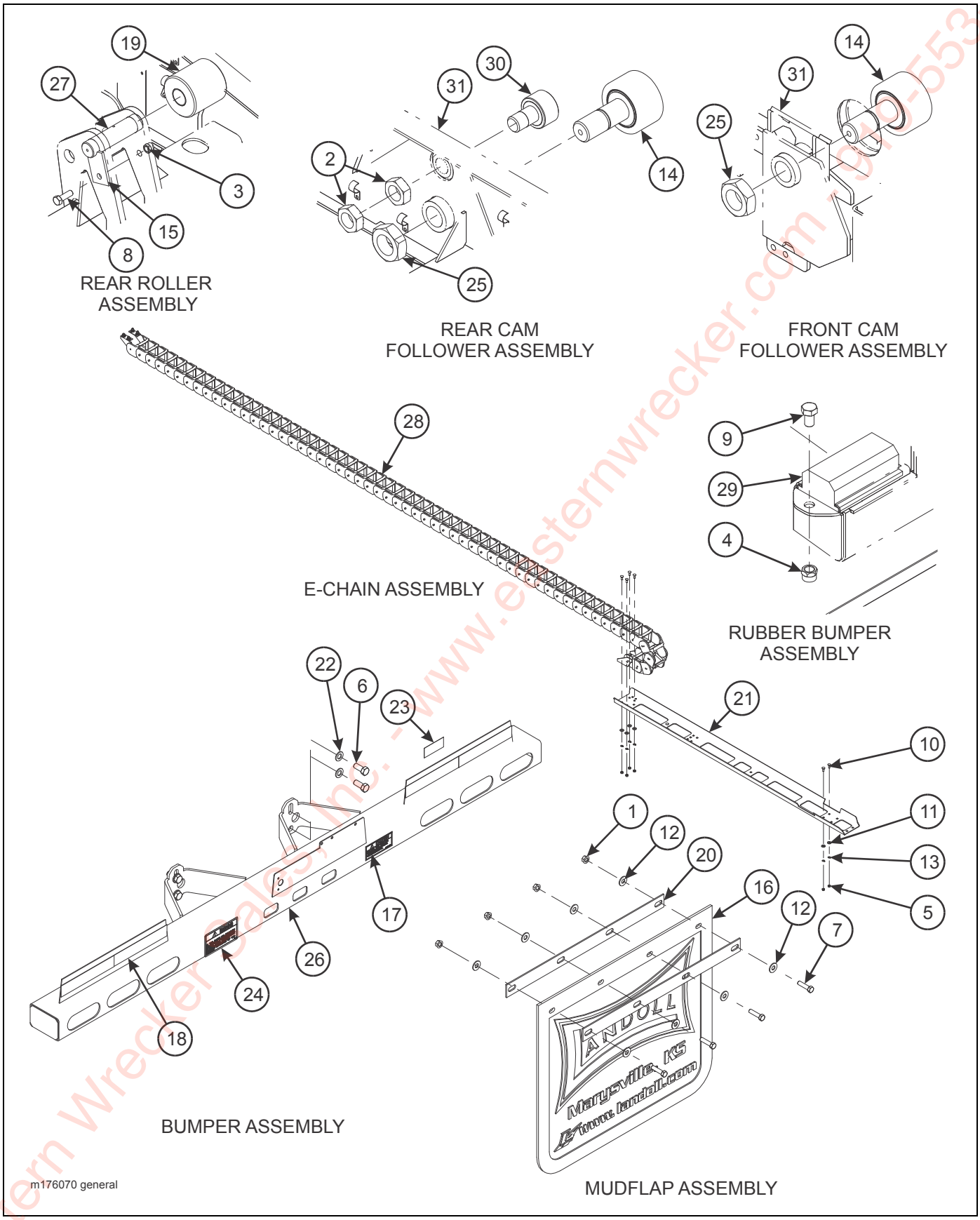

Figure 2-54: Disk Brake Suspension, General Assembly

Eastern Wrecker Sales, Inc. - www.easternwrecker.com - 800-553-4038

DISC BRAKE SUSPENSION, GENERAL ASSEMBLY

ITEM	PART NO.	DESCRIPTION	QTY.
	176070	SUSPENSION ASSEMBLY, DISC BRAKE	REF
1	1-510-010001	NUT, FLANGE LOCK 3/8-16	4
2	1-511-010001-14	NUT, HEX JAM 1-1/2-12	4
3	1-512-010005-09	NUT, HEX LOCK 1/2-13 GRB	1
4	1-512-010005-13	NUT, HEX LOCK 5/8-11 GRB	2
5	1-512-010007-05	NUT, HEX 1/4-20 GRB	11
6	1-654-010032-4	SCREW, HEX HEAD CAP 3/4-10 X 1-3/4 GR8	4
7	1-654-010051-07	SCREW, HEX HEAD CAP 3/8-16 X 1-1/2 GR5	8
8	1-654-010055-03	SCREW, HEX HEAD CAP 1/2-13 X 1-1/2 GR5	1
9	1-654-010059-01	SCREW, HEX HEAD CAP 5/8-11 X 1 GR5	2
10	1-654-010158-1	SCREW, RD HEAD SQ NECK 1/4-20 X 3/4 GR2	11
11	1-861-010032-07	WASHER, FLAT 1/4	*13,11
12	1-861-010032-11	WASHER, FLAT 3/8W	8
13	1-861-010034-09	WASHER, SPLIT LOCK 1/4	11
14	3-076-010015	CAM FOLLOWER 5" DIA (TORQUE TO 250 FT/LBS)	4
15	3-187-010013	CLIP, PIN RETAINER	1
16	3-485-010001	MUD FLAP, 21"	2
17	3-573-010031	DECAL, TRAILER BUMPER (SEE PAGE 2-5)	1
18	3-573-010377	DECAL, 2" REFLEXITE TAPE RED/WHITE (SEE PAGE 2-5)	AR
19	3-645-010084	ROLLER ASSEMBLY, REAR U/C	1
20	3-762-010017	CLAMP, MUD FLAP	2
21	3-821-010005	TRAY, CAT TRACK	1
22	622-3511-008	WASHER, 3/4N	4
23	103055	DECAL, ENERGY BUMPER CERT (SEE PAGE 2-5)	1
24	103056	DECAL, ENERGY BUMPER WARNING (SEE PAGE 2-5)	1
25	104034	NUT, HEX 2-12 GRB	4
26	121369	BUMPER WELDMENT (CAN)	1
27	121686	PIN, 1-1/2 X 6-1/4	1
28	122536	SUPPORT E-CHAIN 455	1
29	142565	PLATE, RUB BUMPER 2"	2
30	145532	CAM FOLLOWER 3" SEALED (TORQUE TO 166 FT/LBS)	2
31	176072	SUSPENSION WELDMENT, DISC BRAKE (455-108)	1

Eastern Wrecker Sales Inc. - www.easternwrecker.com - 919-553-4038

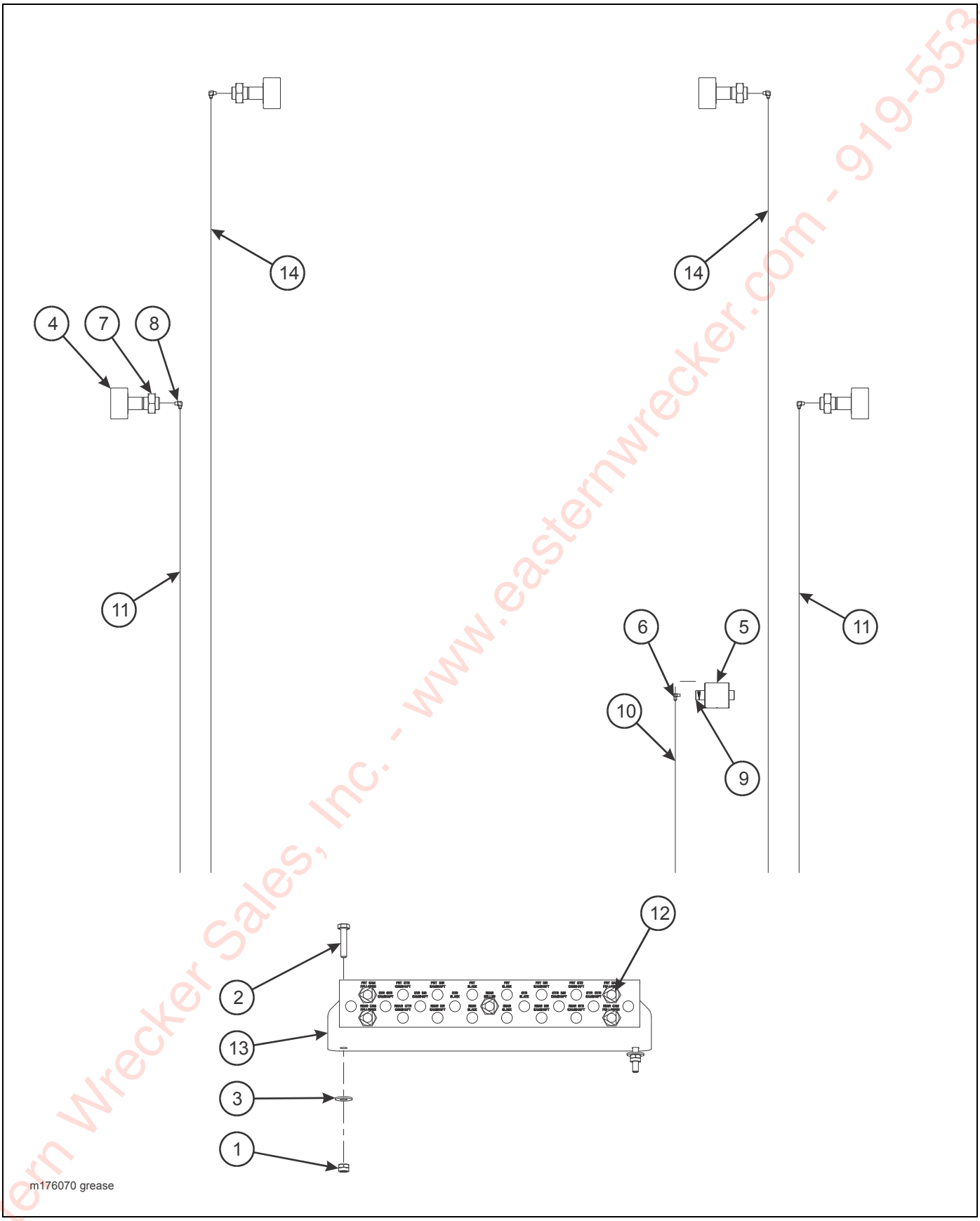

Figure 2-55: Disk Brake Suspension, Grease Assembly

Eastern Wrecker Sales, Inc. - www.easternwrecker.com - 919-553-4038

DISC BRAKE SUSPENSION, GREASE ASSEMBLY

ITEM	PART NO.	DESCRIPTION	QTY.
	176070	SUSPENSION ASSEMBLY, DISC BRAKE	REF
1	1-512-010005-01	NUT, HEX LOCK 1/4-20 GRB	2
2	1-654-010047-07	SCREW, HEX HEAD CAP 1/4-20 X 1-1/4 GR5	2
3	1-861-010032-07	WASHER, FLAT 1/4	2
4	3-076-010015	CAM FOLLOWER 5" DIA (TORQUE TO 250 FT/LBS)	REF
5	3-645-010084	ROLLER ASSEMBLY, REAR U/C	REF
6	2024-2-4S	ADAPTER, ELBOW	1
7	104034	NUT, HEX 2-12 GR2	REF
8	113268	ADAPTER, 90	4
9	121686	PIN, 1-1/2 X 6-1/4	REF
10	142441	HOSE ASSEMBLY, GREASE 1/4 X 45	1
11	142444	HOSE ASSEMBLY, GREASE 1/4 X 83	2
12	142545	NUT, 7/16	23
13	143182	BRACKET, GREASE HOSE	1
14	144614	HOSE ASSEMBLY GREASE X 172	2

Eastern Wrecker Sales, Inc. - www.easternwrecker.com - 919-553-4038

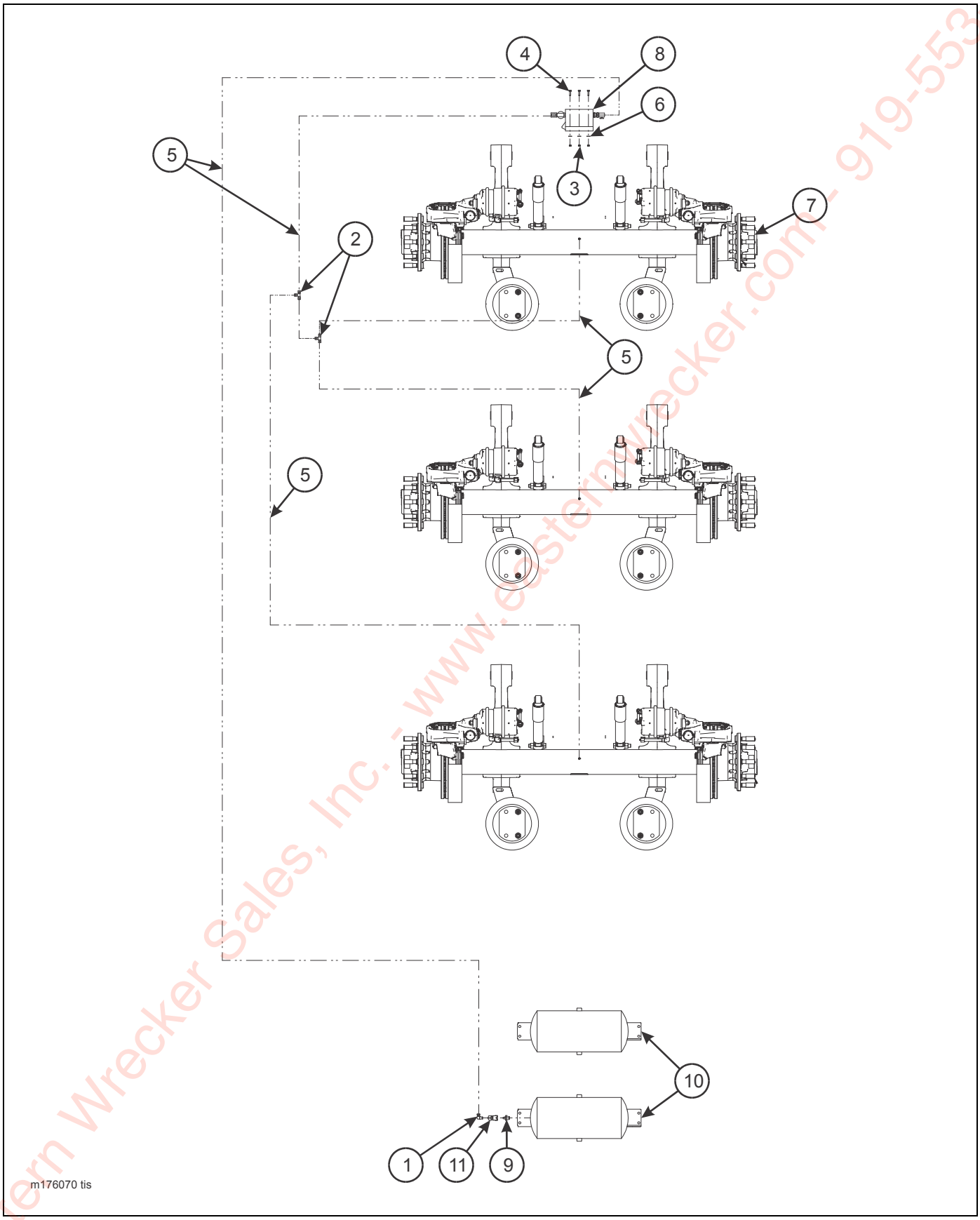

Figure 2-56: Disk Brake Suspension, Tire Inflation Assembly

Eastern Wrecker Sales, Inc. - www.easternwrecker.com - 919-553-4038

DISC BRAKE SUSPENSION, TIRE INFLATION ASSEMBLY

ITEM	PART NO.	DESCRIPTION	QTY.
	176070	SUSPENSION ASSEMBLY, DISC BRAKE	REF
1	1-297-010008-07	FITTING AIR 90	REF
2	1-297-010010-01	FITTING AIR UNION TEE	REF
3	1-512-010005-01	NUT, HEX LOCK 1/4-20 GRB	3
4	1-654-010047-06	SCREW, HEX HEAD CAP 1/4-20 X 1 GR5	3
5	1-833-010001	TUBING NYLON 1/4 OD	AR
6	1-861-010032-07	WASHER, FLAT 1/4W	3
7	175754	AXLE, DISC SPRING BRAKE 75-1/2” 16-1/2” 25K TIS (SEE PAGE 2-105)	REF
8	176076	THERMALERT, TIRE INFLATION SYSTEM, TRIPLE SAF AXLES (SEE PAGE 2-107)	1
9	2083-8-4S	NIPPLE, HEX 1/2 - 1/4	1
10	3-780-010002	TANK AIR	REF
11	31023-01	THERMALERT PRESSURE PROTECTION VALVE	REF

Eastern Wrecker Sales, Inc. - www.easternwrecker.com - 919-553-4038

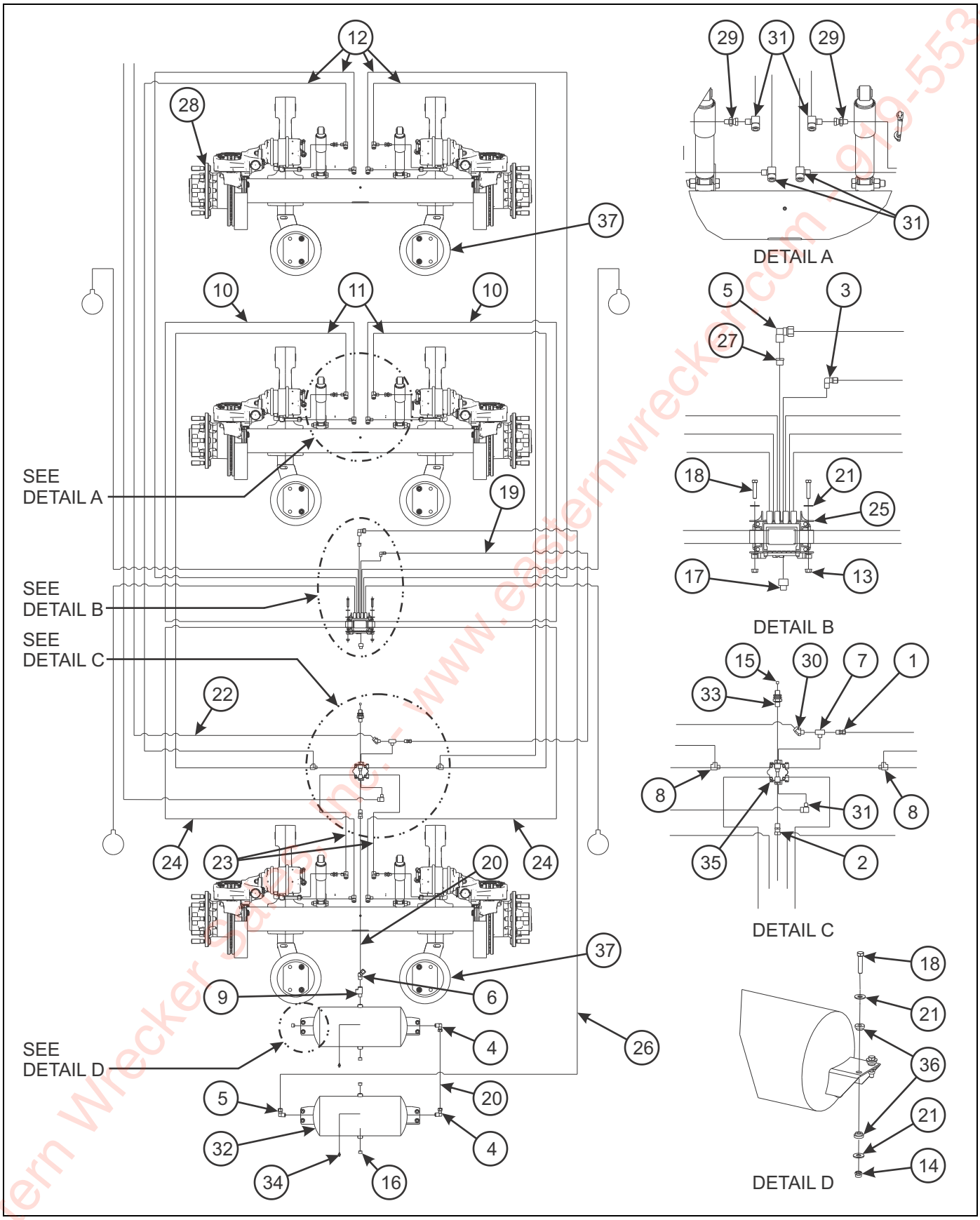

Figure 2-57: Air System, U/C ABS Disk Brake

Eastern Wrecker Sales, Inc. - www.easternwrecker.com - 919-553-4038

AIR SYSTEM, U/C ABS DISC BRAKE

ITEM	PART NO.	DESCRIPTION	QTY.
	176865	AIR SYSTEM, U/C ABS DISC BRAKE	
1	1-297-010007-12	FITTING, AIR	1
2	1-297-010007-15	FITTING, AIR	1
3	1-297-010008-18	FITTING, AIR 90	1
4	1-297-010008-24	FITTING, AIR 90	4
5	1-297-010008-26	FITTING, AIR 90	2
6	1-297-010013-16	FITTING, AIR 45	1
7	1-297-010017-03	FITTING, AIR M/BR TEE	1
8	1-297-010018-03	FITTING, BRS PIPE ST TEE	REF
9	1-297-010018-04	FITTING, BR TEE	1
10	1-384-010038-2	HOSE, AIR 3/8 X 66	2
11	1-384-010038084	HOSE, AIR 3/8 X 84”	2
12	1-384-010038120	HOSE, AIR 3/8 X 120	4
13	1-510-010001	NUT, FLANGE LOCK 3/8-16	2
14	1-512-010005-05	NUT, HEX LOCK 3/8-16 GRB	12
15	1-560-010002-02	PIPE PLUG 1/4	2
16	1-560-010002-04	PIPE PLUG 1/2	5
17	1-560-010002-05	PIPE PLUG 3/4-14	1
18	1-654-010051-08	SCREW, HEX HEAD CAP 3/8-16 X 1-3/4 GR5	14
19	1-833-010002	TUBING, NYLON 3/8	AR
20	1-833-010003	TUBING, NYLON 1/2	AR
21	1-861-010032-11	WASHER, FLAT 3/8W	26
22	100949	HOSE, AIR 3/8 X 222 W/ 3/8 ENDS	2
23	101003	HOSE, AIR 3/8 X 48	2
24	103738	HOSE, AIR 3/8 X 100	2
25	114586	BRAKE KIT, ABS 4S/2M (SEE PAGE 2-77)	1
26	117304	TUBING, NYLON 5/8	AR
27	118-2659-9	BUSHING 1/2 X 3/4	1
28	175754	AXLE, 75-1/2 16-1/2 DISC SPRING BRAKE 25K TIS (SEE PAGE 2-105)	REF
29	2045-6-6S	ADAPTER, SWIVEL	4
30	2088-6-6S	ADAPTER, 45	1
31	2089-6-6S	ADAPTER, 90	1
32	3-780-010002	TANK, AIR	3
33	55B61	FRAME UNION	1
34	56D4	AIR TANK DRAIN COCK	3
35	758-181	VALVE RELAY EMERGENCY	1
36	805-2	STEP BUSHING	24
37	123594	AIR SPRING	6

Eastern Wrecker Sales, Inc. www.easternwrecker.com - 919-553-4038

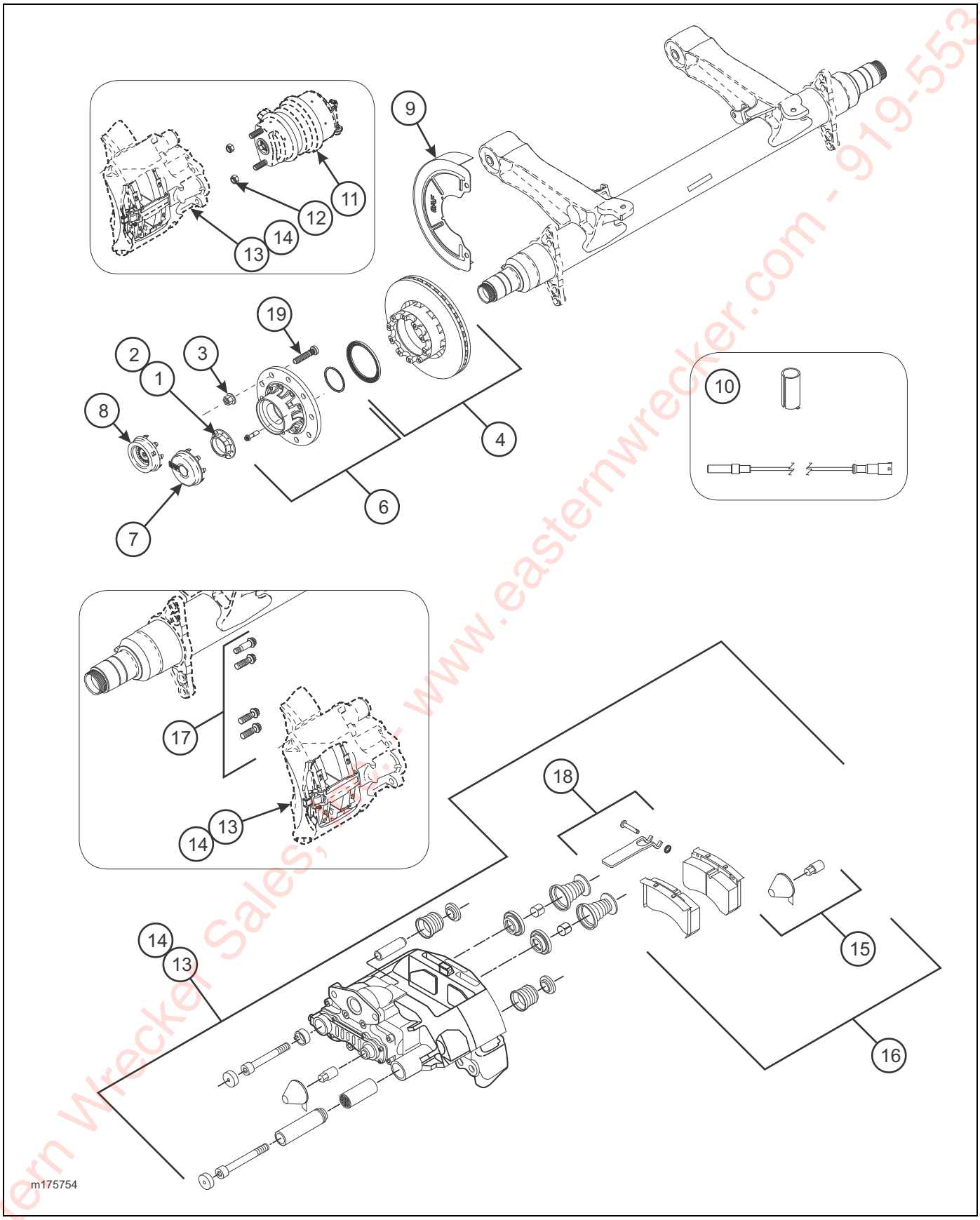

Figure 2-58: Disc Spring Brake Axle Items

Eastern Wrecker Sales, Inc. - www.easternwrecker.com - 919-553-4038

DISC SPRING BRAKE AXLE ITEMS

ITEM	PART NO.	REFERENCE NO.	DESCRIPTION	QTY./AXLE
	175754	S04BN0014	AXLE, DISC SPRING BRAKE 75-1/2” 16-1/2” 25K TIS	
1	179568	01011008500Z	AXLE NUT, LH	1
2	179569	01011008600Z	AXLE NUT, RH	1
3	179570	04247301201Z	WHEEL NUT	2
4	179571	03606307600Z	HEAD UNIT W/ LONG STUDS	2
5	179572	05387001503Z	AXLE STUB GREASE (NOT SHOWN)	2
6	179573	03434366300Z	DISC REPAIR KIT	1
7	179574	03304010900Z	HUB CAP (PSI)	2
	179575	03304010201Z	HUB CAP (NO PSI)	2
8	179576	03304010301Z	HUB CAP HUB ODOMETER	2
9	176876	02005023000Z	DUST SHIELD	2
10	179577	03029024200Z	ABS KIT	2
11	179578	04454109864Z	BRAKE CHAMBER 16/24	2
12	179579	04247405280Z	BRAKE CHAMBER NUT	4
13	179580	03080005901Z	BRAKE CALIPER, LH 22.5	1
14	179581	03080006001Z	BRAKE CALIPER, RH 22.5	1
15	179582	03434381600Z	ADJUSTER CAP	2
16	179583	03057008500Z	BRAKE LINING KIT 22.5	1
17	179584	03434366000Z	BRAKE CALIPER BOLT KIT	2
18	179585	03434380900Z	BRAKE PAD RETAINING CLIP	2
19	195320	04375101210Z	LONG WHEEL STUD	2

Eastern Wrecker Sales, Inc. - www.easternwrecker.com - 919-553-4038

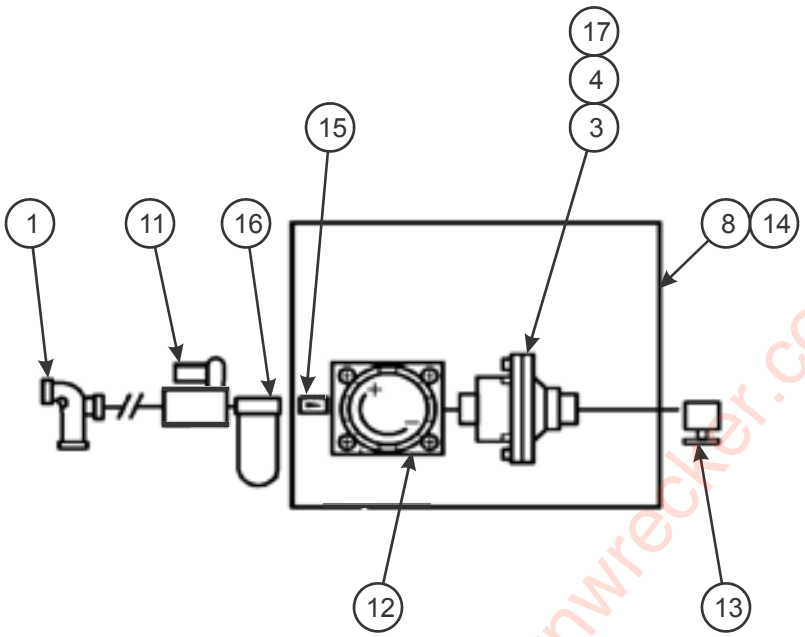

CONTROL BOX ASSEMBLY

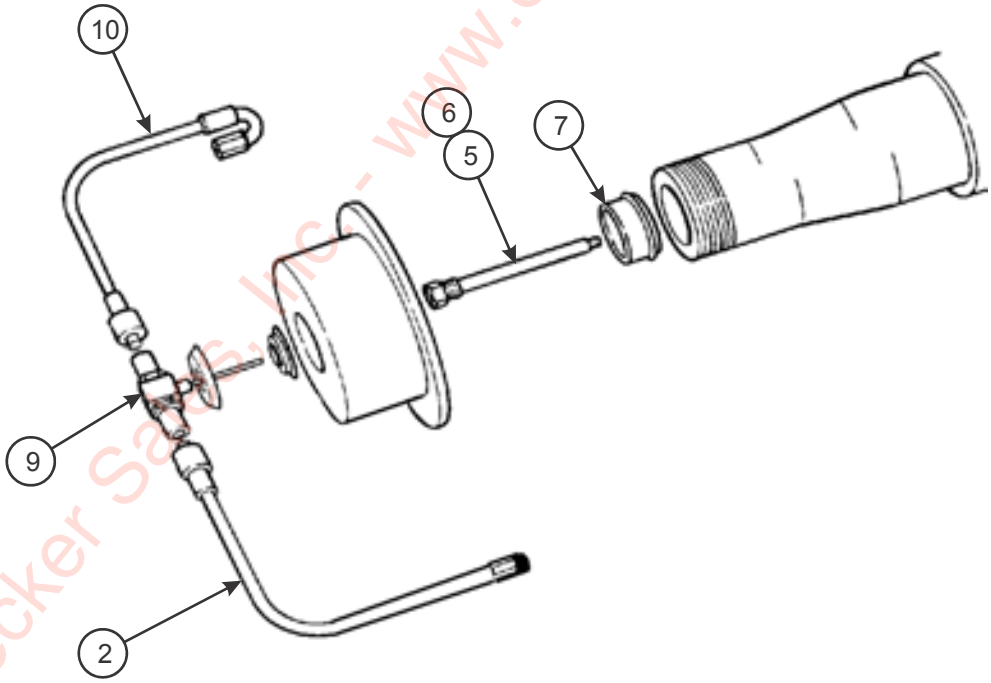

m176076

DUAL WHEEL END ASSEMBLY

Figure 2-59: Thermalert Tire Inflation System (Triple) (SAF Axles)

Eastern Wrecker Sales, Inc. - www.easternwrecker.com - 919-553-4038

THERMALERT TIRE INFLATION SYSTEM (TRIPLE) (SAF AXLES)

ITEM	PART NO.	DESCRIPTION	QTY.
	176076	THERMALERT, TIRE INFLATION SYSTEM, TRIPLE SAF AXLES	
1	168610	PRESSURE PROTECTION VALVE BAG	1
2	168612	LONG HOSE	1
3	168613	WIRING HARNESS	1
4	168614	LIGHT BAG ASSEMBLY	1
5	168615	STATOR BOX	1
6	168616	1/4 NPT STATOR AND FILTER ASSEMBLY	1
7	168617	PRESS PLUG ASSEMBLY 1.75	1
8	168618	CONTROL BOX	1
9	178592	THRU TEE ASSEMBLY 3.50”	1
10	180222	SHORT FLEX HOSE	1
11	180223	SHUT-OFF VALVE	1
12	180224	PRESSURE REGULATOR VALVE	1
13	180225	PETCOCK	1
14	180226	CONTROL BOX LID	1
15	180227	BULKHEAD/CHECK VALVE	1
16	180228	SELF-DRAINING FILTER	1
17	180229	FLOW SENSING SWITCH	1

Eastern Wrecker Sales, Inc. - www.easternwrecker.com - 919-553-4038

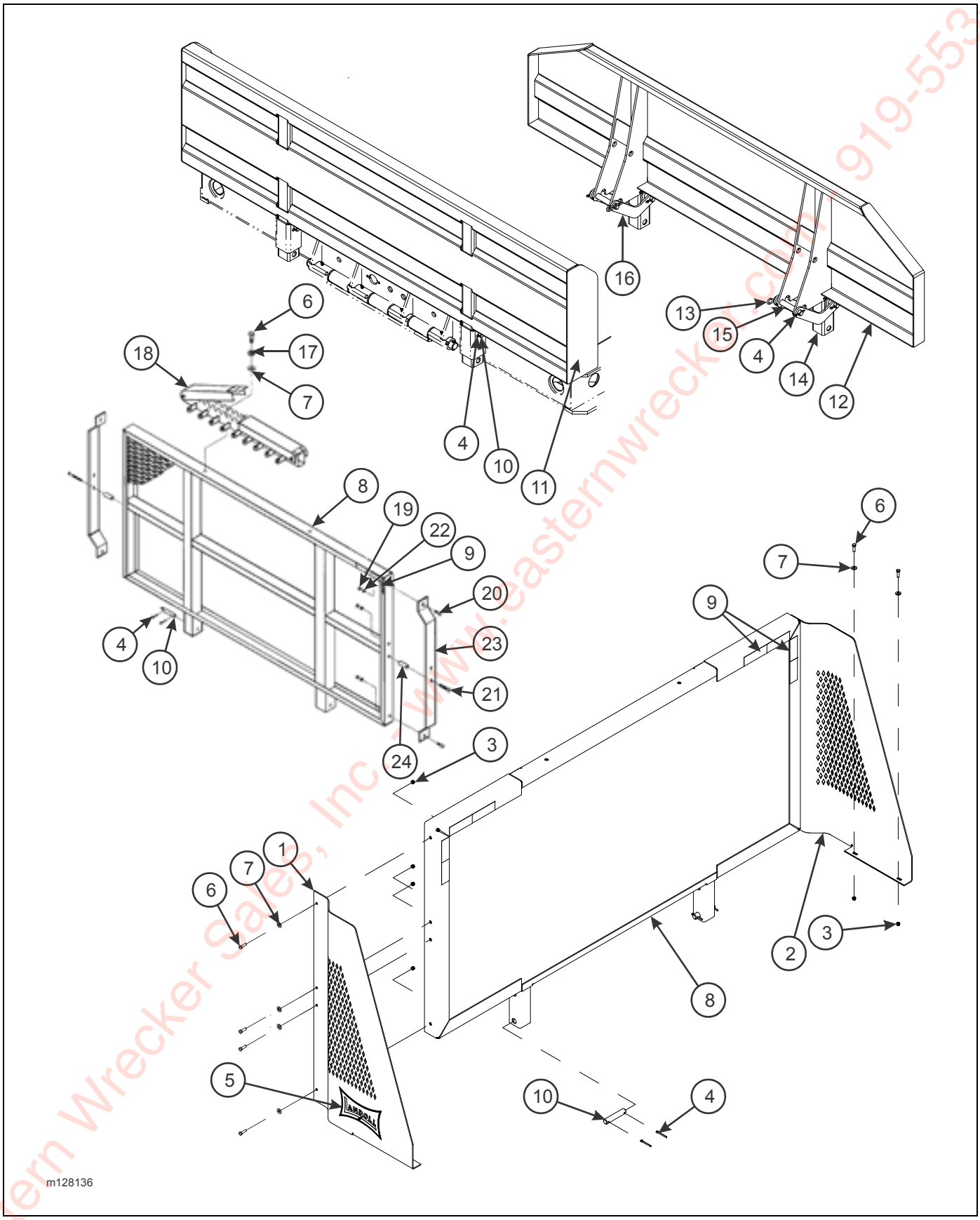

Figure 2-60: Bulkhead Assembly

Eastern Wrecker Sales, Inc. www.easternwrecker.com 919-553-4038

BULKHEAD ASSEMBLY (OPTION)

ITEM	PART NO.	DESCRIPTION	QTY.
	128136	BULKHEAD INSTALLATION (ITEMS 1-10)	REF
	134616	BULKHEAD INSTALLATION 26 X 102 (ITEMS 4, 9-10, 11)	
	136848	EXTENSION INSTALLATION 16/24 (ITEMS 4, 12-16)	
	B7-141-003	BULKHEAD CHAIN RACK INSTALLATION (ITEMS 6-7, 17-18)	
	3-141-010121	BULKHEAD INSTALLATION (ITEMS 4, 8-10, 19-24)	REF
	130895	BULKHEAD INSTALLATION, SPECIAL (ITEMS 1-10)	
1	128137	EXTENSION, BULKHEAD ALUM LH	
	128153	EXTENSION, BULKHEAD LH	
2	128138	EXTENSION, BULKHEAD ALUM RH	
	128152	EXTENSION, BULKHEAD RH	
3	1-512-010005-05	NUT, HEX LOCK 3/8-16	
4	1-557-010362-63	COTTER PIN 1/4 X 2	
5	153754	DECAL, BOW TIE (BLACK) (SEE PAGE 2-5)	
	153755	DECAL, BOW TIE (WHITE) (SEE PAGE 2-5)	
6	1-654-010051-06	SCREW, HEX HEAD CAP 3/8-16 X 1-1/4 GR5	
7	1-861-010032-11	WASHER, FLAT 3/8	
8	3-141-010155	BULKHEAD WELDMENT 48 X 96	
	130896	BULKHEAD WELDMENT, SPECIAL (130895)	
9	3-573-010378	DECAL, 2” REFLEXITE TAPE, WHITE	
10	6-557-010163	PIN HITCH LEVEL LINK	
11	134608	BULKHEAD WELDMENT 26 X 102	
12	136849	BULKHEAD WELDMENT 16/24 X 102 2 POS	
13	1-557-010014	PIN, HAIR 1/4	
14	3-482-010249	MOUNT WELDMENT BULKHEAD	
15	3-557-010380	PIN	
16	3-755-010080	SUPPORT WELDMENT, BULKHEAD	
17	1-861-010034-11	WASHER, SPLIT LOCK 3/8	
18	3-141-010008	CHAIN HANGER, LOCKING CHANNEL ASSEMBLY	
19	1-512-010005-09	NUT, HEX LOCK 1/2-13 GRB	
20	1-654-010055-03	SCREW, HEX HEAD CAP 1/2-13 X 1-1/2 GR5	
21	1-654-010055-13	SCREW, HEX HEAD CAP 1/2-13 X 4 GR5	
22	1-861-010032-15	WASHER, FLAT 1/2W	
23	3-054-010101	BAR, SIDE 48" BULKHEAD 102"	
24	3-711-010025	SPACER, 48" BULKHEAD	

Eastern Wrecker Sales, Inc. - www.easternwrecker.com - 919-553-4038

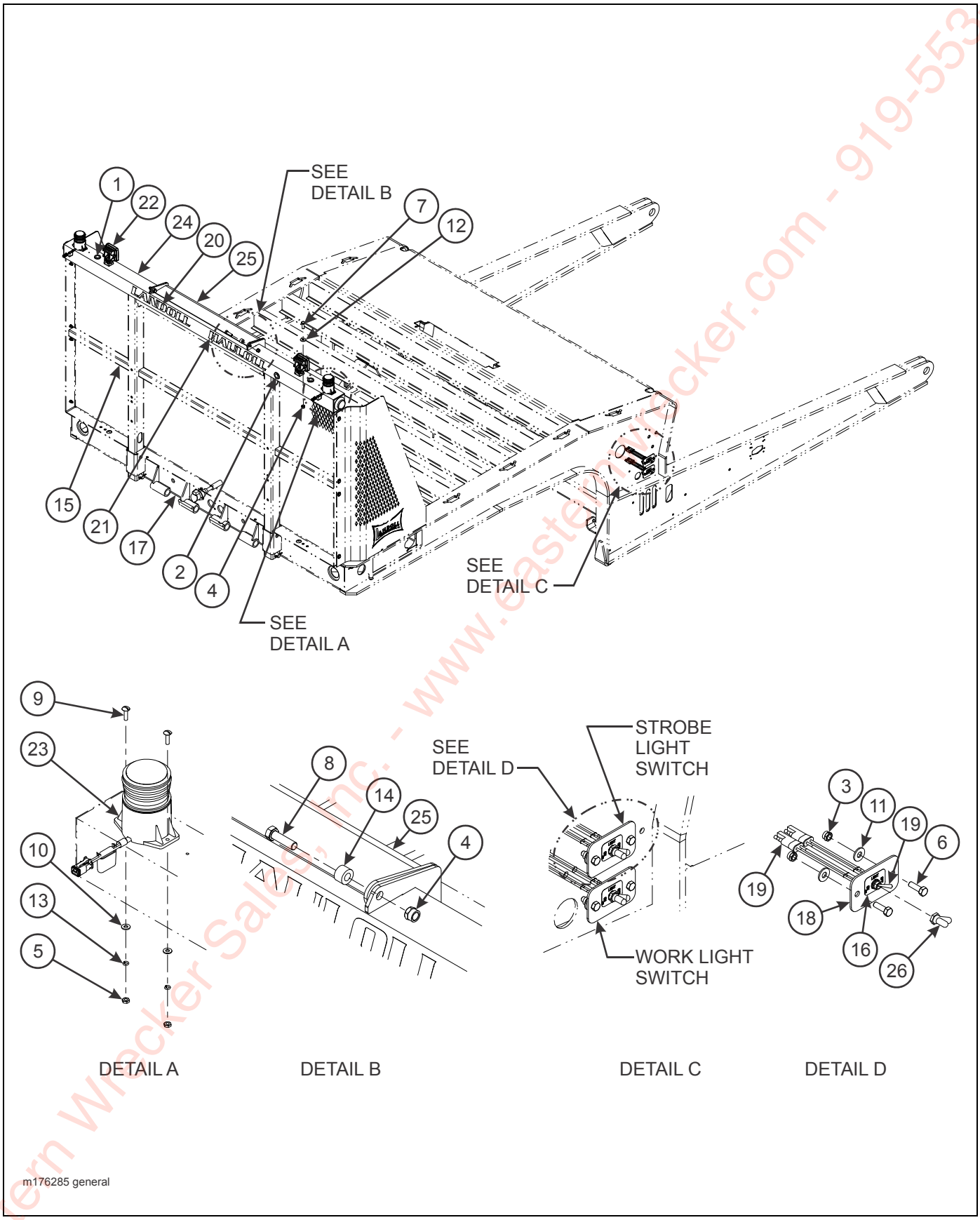

Figure 2-61: Bulkhead Chain Rack Light General Assembly

Eastern Wrecker Sales, Inc. - www.easternwrecker.com - 919-553-4038

BULKHEAD CHAIN RACK LIGHT GENERAL ASSEMBLY (OPTION)

ITEM	PART NO.	DESCRIPTION	QTY.	
	167971	BULKHEAD CHAIN RACK S/T/T WORK LIGHT	*	
	176286	BULKHEAD CHAIN RACK S/T/T W/ STROBE		*
1	1-343-010006	GROMMET	2	2
2	1-343-010007	GROMMET	1	1
3	1-512-010005-03	NUT, HEX LOCK 5/16-18 GRB	2	4
4	1-512-010005-09	NUT, HEX LOCK 1/2-13 GRB	4	4
5	1-512-010007-03	NUT, HEX LOCK 10-24	--	4
6	1-654-010049-05	SCREW, HEX HEAD CAP 5/16-18 X 1 GR5	2	4
7	1-654-010055-03	SCREW, HEX HEAD CAP 1/2-13 X 1-1/2 GR5	2	2
8	1-654-010055-04	SCREW, HEX HEAD CAP 1/2-13 X 1-3/4 GR5	2	2
9	1-656-010003051	SCREW, RD HEAD SQ NECK 10-24 X 3/4	--	4
10	1-861-010032-03	WASHER, FLAT #10	--	4
11	1-861-010032-09	WASHER, FLAT 5/16W	2	4
12	1-861-010032-15	WASHER, FLAT 1/2W	2	2
13	1-861-010034-07	WASHER, FLAT #10	--	4
14	125799	SPACER	2	2
15	-----	BULKHEAD WELDMENT	REF	REF
16	130116	DECAL, ON/OFF LIGHT	1	2
17	-----	GOOSENECK WELDMENT	REF	REF
18	137987	MOUNT, ELECTRICAL SWITCH	1	2
19	150117	TOGGLE SWITCH SEALED SPST	REF	REF
20	155273	DECAL, LANDOLL 2-1/2 BLK REFLECTIVE	1	1
21	155274	DECAL, HAULOLL 2-1/2 BLK REFLECTIVE	1	1
22	163996	LIGHT, LED WHITE FLOODLAMP	REF	REF
23	165788	STROBE LIGHT MODIFIED ASSEMBLY	-----	REF
24	167972	TUBE WELDMENT, BULKHEAD TOPPER	‘	1
25	167975	LID WELDMENT, CHAIN BINDER	1	1
26	81264	RUBBER BOOT FOR ELECT SWITCH	1	2

Eastern Wrecker Sales, Inc. www.easternwrecker.com - 919-555-4038

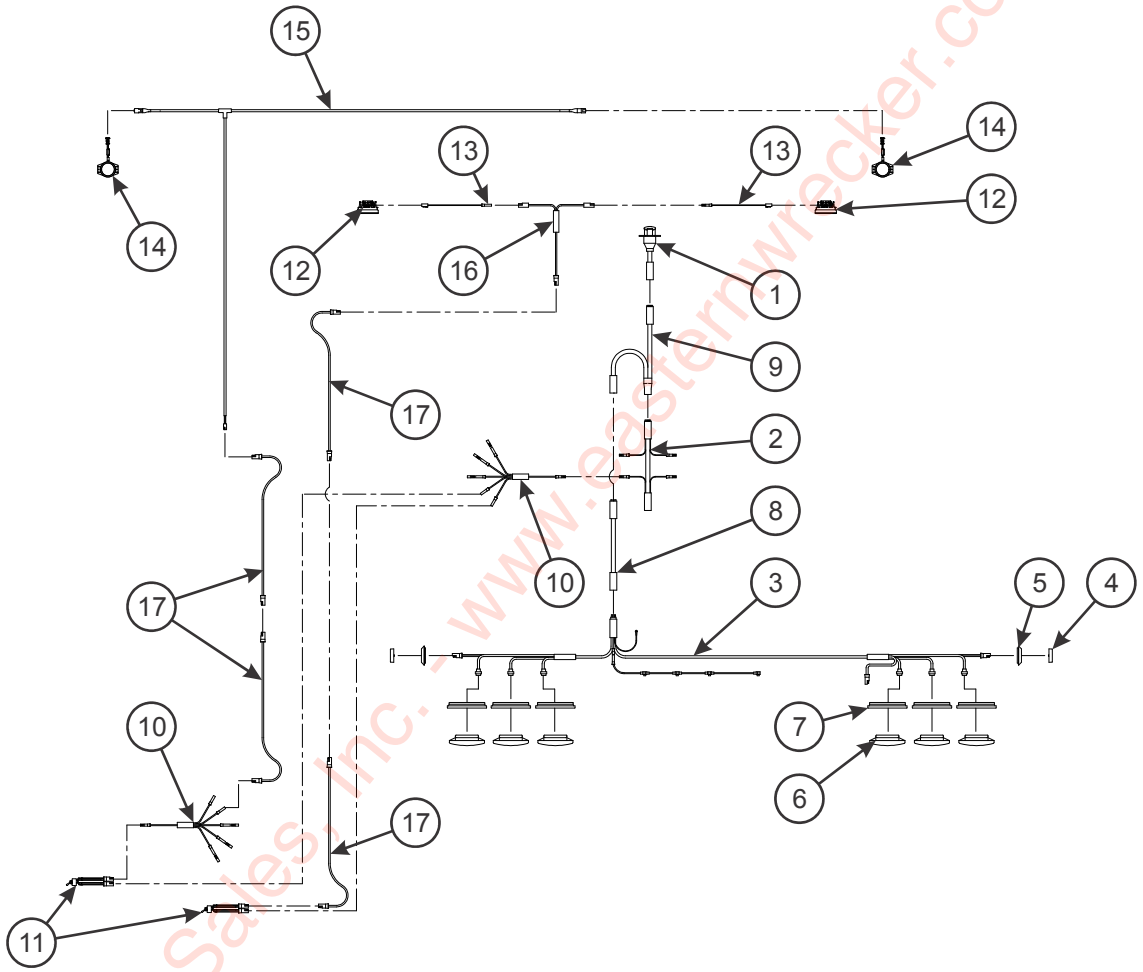

m176285 electrical

Figure 2-62: Bulkhead Chain Rack Light Electrical Assembly

Eastern Wrecker Sales, Inc. - www.easternwrecker.com - 919-553-4038

BULKHEAD CHAIN RACK LIGHT ELECTRICAL ASSEMBLY (OPTION)

ITEM	PART NO.	DESCRIPTION	QTY.	
	167971	BULKHEAD CHAIN RACK S/T/T WORK LIGHT	*	
	176286	BULKHEAD CHAIN RACK S/T/T W/ STROBE		*
1	143100	HARNESS, 7 WAY RECEPTACLE	REF	REF
2	143101	HARNESS, FRONT MAIN	REF	REF
3	143104	HARNESS, BUMPER	1	1
4	143109	LIGHT, YELLOW LED 2.5 CL/MARKER	2	2
5	143110	GROMMET, 2.5 SURFACE MOUNT	2	2
6	143113	LIGHT, RED LED OVAL STT	6	6
7	143114	GROMMET, OVAL	6	6
8	143167	HARNESS EXTENSION, 84”	1	1
9	146929	HARNESS, Y SPLITTER	1	1
10	150093	HARNESS, 5 AUXILIARY BRANCHES	REF	1
11	150117	TOGGLE SWITCH SEALED SPST	1	1
12	163996	LIGHT LED WHITE FLOOD LAMP	2	2
13	164052	HARNESS, 60” BRANCH WORK LIGHT	2	2
14	165788	STROBE LIGHT MODIFIED ASSEMBLY	--	2
15	165789	HARNESS ASSEMBLY, STROBE BEACON	--	1
16	169853	HARNESS, JUMPER T-POWER	1	1
17	3-368-010252	HARNESS ASSEMBLY, BULKHEAD LIGHT EXT	2	4

Eastern Wrecker Sales, Inc. - www.easternwrecker.com - 919-554-4038

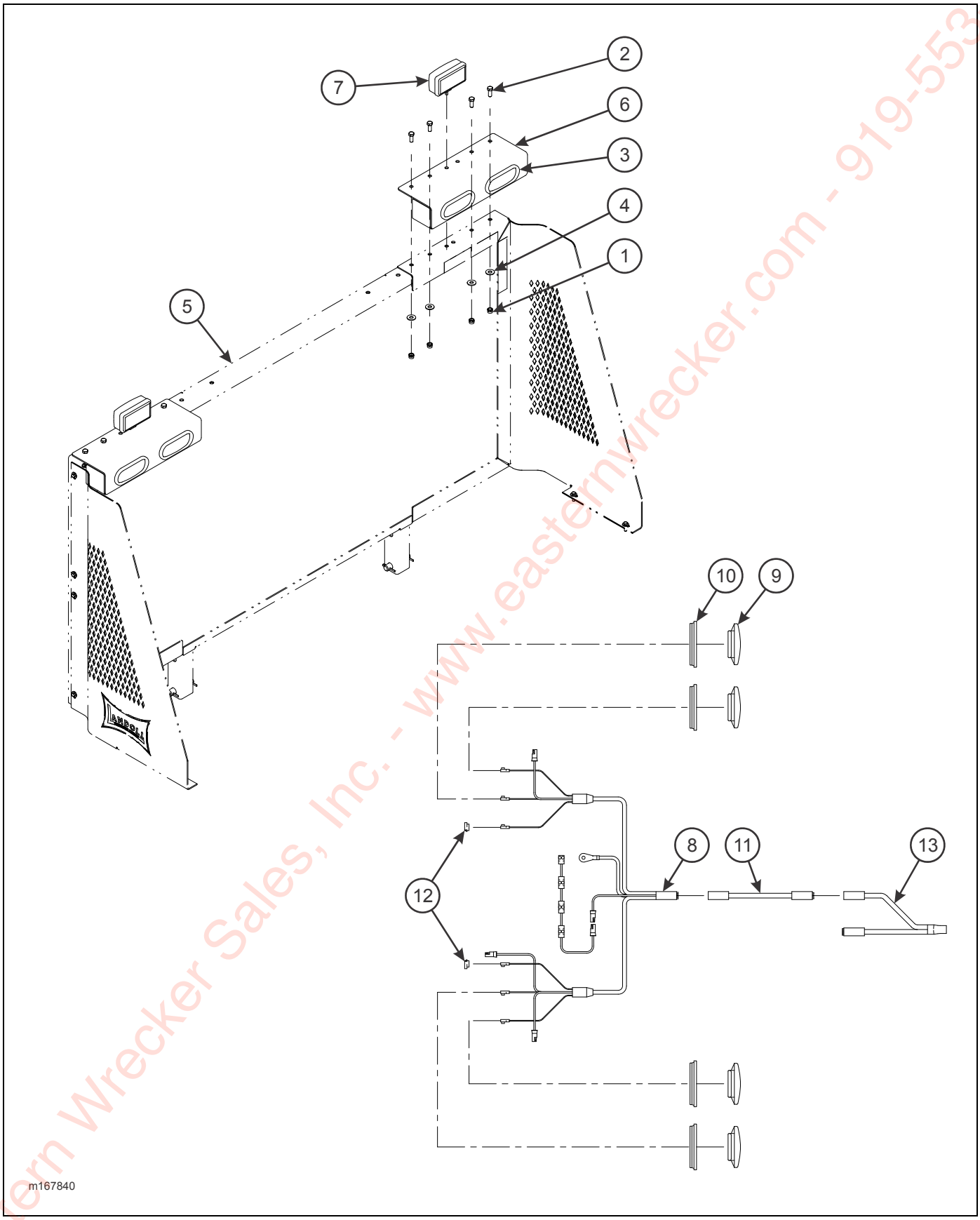

Figure 2-63: Bulkhead Stop/Tail/Turn Light Assembly

Eastern Wrecker Sales, Inc. - www.easternwrecker.com - 919-553-4038

BULKHEAD STOP/TAIL/TURN LIGHT ASSEMBLY (OPTION)

ITEM	PART NO.	DESCRIPTION	QTY.
	167840	BULKHEAD STOP/TAIL/TURN LIGHT ASSEMBLY	
1	1-512-010005-09	NUT, HEX LOCK 1/2-13 GRB	8
2	1-654-010055-02	SCREW, HEX HEAD CAP 1/2-13 X 1-1/4 GR5	8
3	1-822-010002	TRIM-LOK 3/16 (NOT SHOWN)	4
4	1-861-010032-15	WASHER, FLAT 1/2W	8
5	-----	BULKHEAD INSTALLATION	REF
6	167843	MOUNT WELDMENT, STOP/TURN/TAIL	2
7	64181	RECT QUARTZ HALOGEN LAMP	REF
8	143104	HARNESS, REAR LED	1
9	143113	LIGHT, RED LED OVAL STT	4
10	143114	GROMMET, OVAL	4
11	143167	HARNESS EXTENSION, 84”	1
12	144608	DUMMY PLUG FOR FEMALE PLUG	2
13	146929	HARNESS, Y SPLITTER	1

Eastern Wrecker Sales, Inc. - www.easternwrecker.com - 919-553-4038

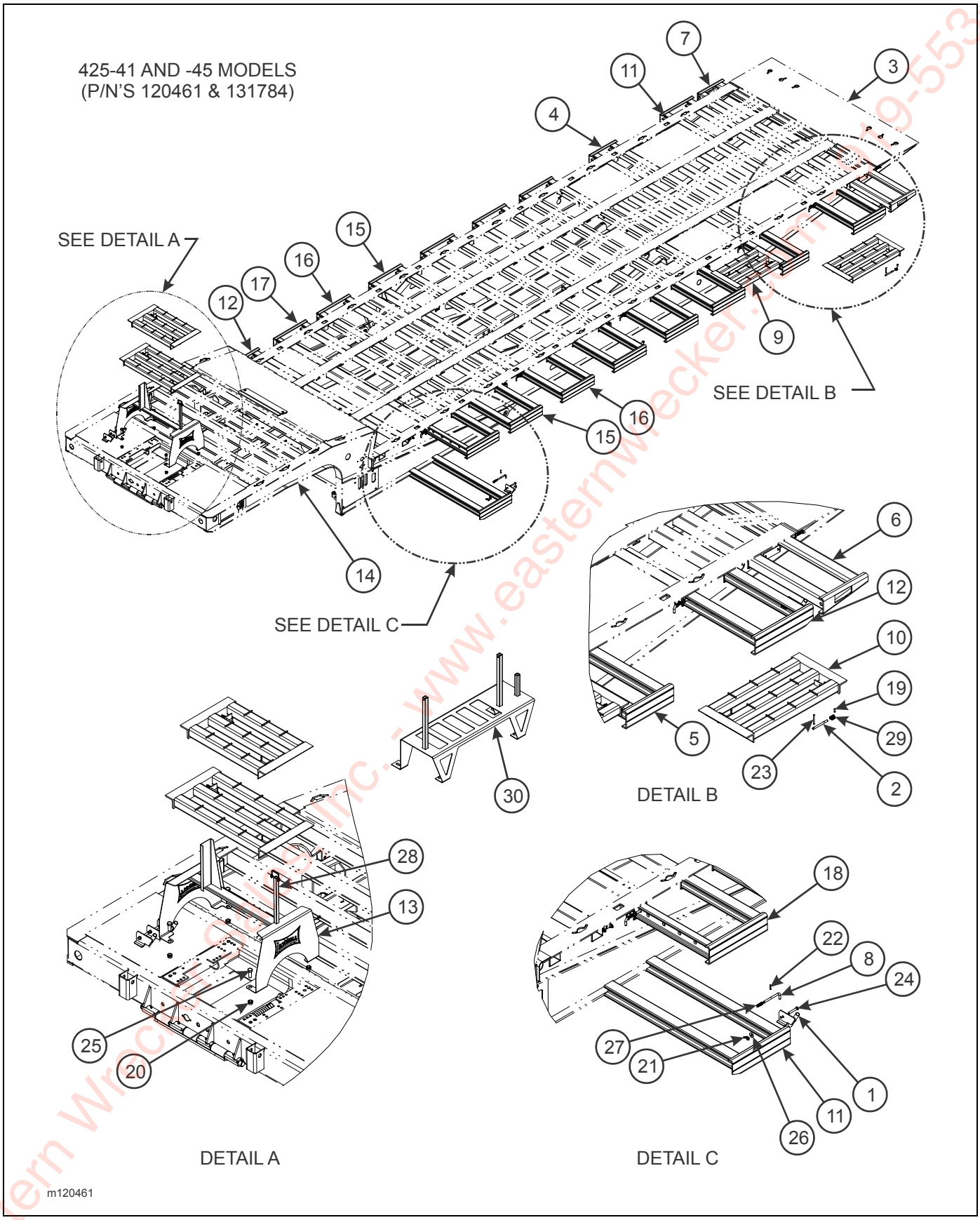

Figure 2-64: Pullout Installation (425)

Eastern Wrecker Supplies Inc. - www.easternwrecker.com 519-553-4038

PULLOUT INSTALLATION (425) (OPTION)

ITEM	PART NO.	DESCRIPTION	QTY.	
	120461	PULLOUT INSTALLATION 425-41	*	
	131784	PULLOUT EXTENSION INSTALLATION 425-45		*
1	108859	WELDMENT, BRACKET FLAG HOLDER	6	6
2	118723	PIN, SLIDE LOCK EXT	8	8
3	-----	FRAME WELDMENT	REF	REF
4	120376	PULLOUT ASSEMBLY 18RH	1	1
5	120377	PULLOUT ASSEMBLY 18LH	1	1
6	120379	EXTENSION REAR P/O LH	1	1
7	120380	EXTENSION REAR P/O RH	1	1
8	120457	PIN, P/O EXT LOCK	20	22
9	120491	EXT. WLDMT FRT WHEEL WELL	2	2
10	120492	EXT. WLDMT REAR WHEEL WELL	2	2
11	122913	PULLOUT CLIPPED RH	2	2
12	122916	PULLOUT CLIPPED LH	2	2
13	130553	RACK WELDMENT, PULLOUT	1	1
14	-----	FRAME ASSEMBLY, G/N	REF	REF
15	131738	PULLOUT WELDMENT RH	5	6
16	131739	PULLOUT WELDMENT LH	5	6
17	131740	PULLOUT WELDMENT FRT RH	1	1
18	131741	PULLOUT WELDMENT FRT LH	1	1
19	0600-250-01000	PIN, ROLL 1/4 X 1	8	8
20	1-512-010005-15	NUT, HEX LOCK 3/4-10 GRB	4	4
21	1-533-010001	NUT, WING 1/2-13	6	6
22	1-647-010004177	PIN, SPRING SLOTTED 3/16 X 1-1/2	20	22
23	1-647-010004225	PIN, ROLL 1/4 X 3	8	8
24	1-654-010055-09	SCREW, HEX HEAD CAP 1/2-13 X 3 GR5	6	6
25	1-654-010061-05	SCREW, HEX HEAD CAP 3/4-10 X 2 GR5	4	4
26	1-861-010032-15	WASHER, FLAT 1/2W	6	6
27	104253	SPRING, COMPRESSION P/O EXT LOCK	20	22
28	516-22PTL	RETAINING PIN MUD FLAP	1	1
29	CO-975-74-2000	SPRING, COMPRESSION	8	8
30	120822	SUPPORT WELDMENT P/O EXT	1	-----

Eastern Wrecker Sales, Inc. - www.easternwrecker.com - 919-553-4038

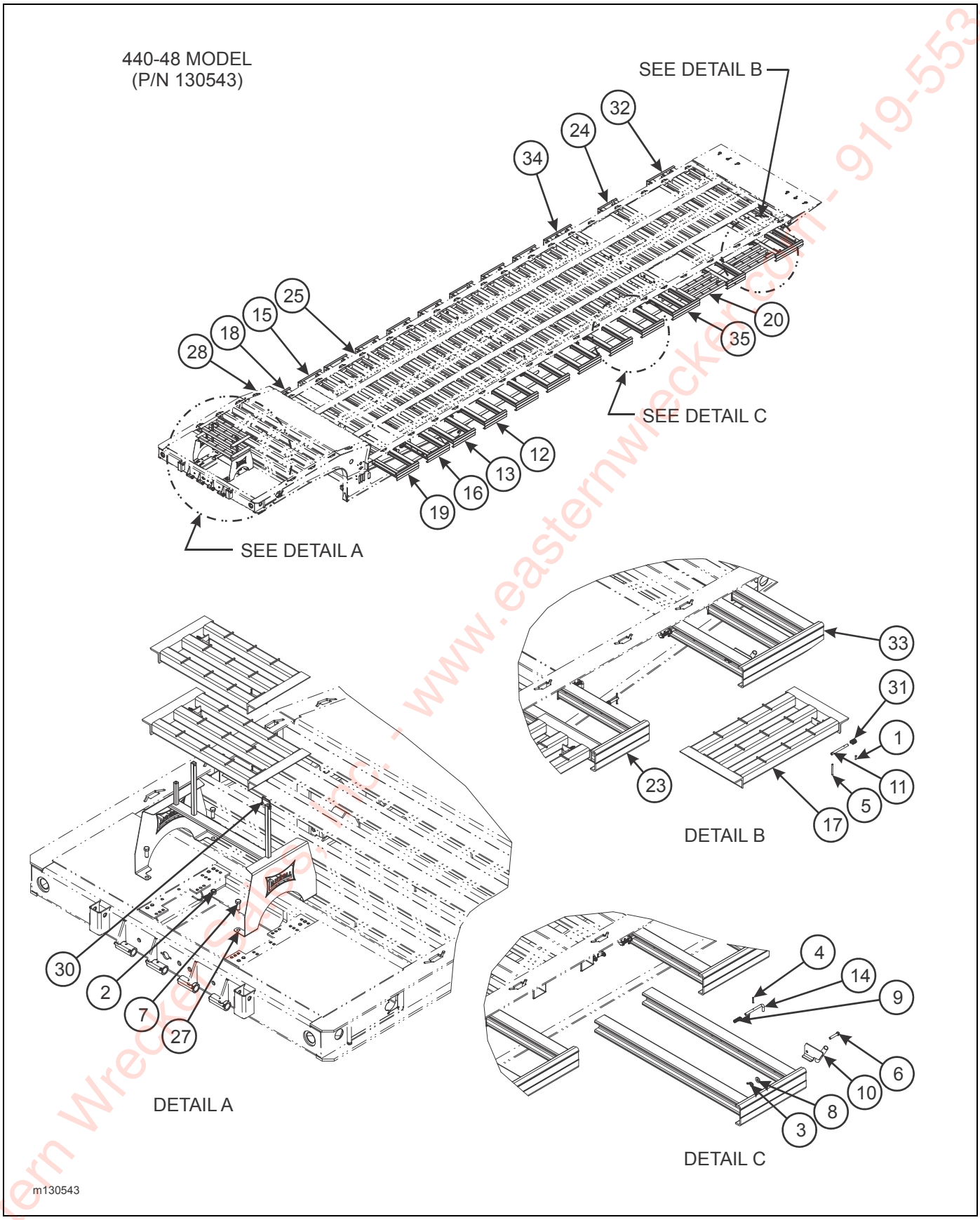

Figure 2-65: Pullout Installation (440) (1 of 3)

Eastern Wrecker Sales, Inc. - www.easternwrecker.com - 919-553-4038

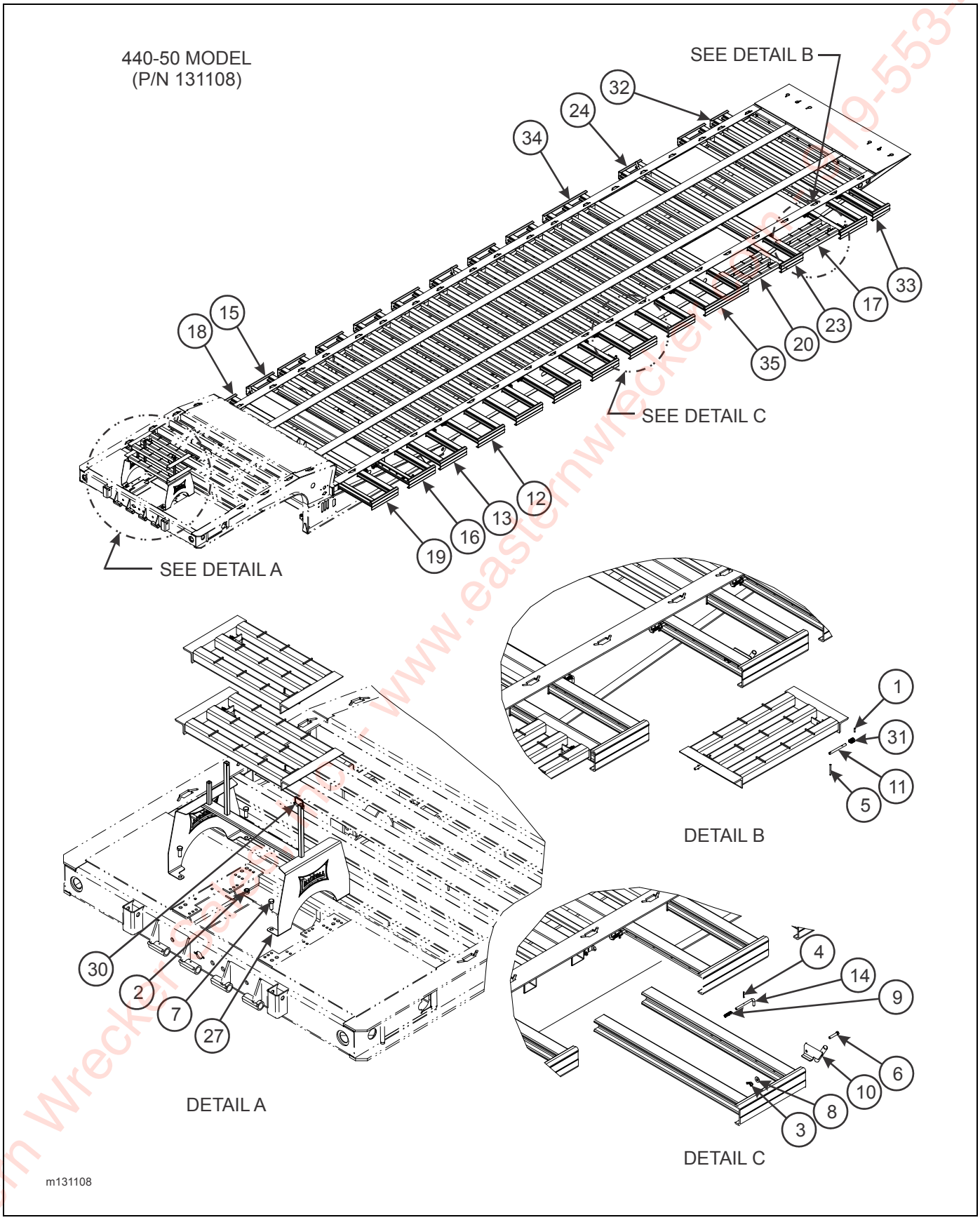

Figure 2-66: Pullout Installation (440) (2 of 3)

Eastern Wrecker Supply Inc. - www.easternwrecker.com - 519-553-4038

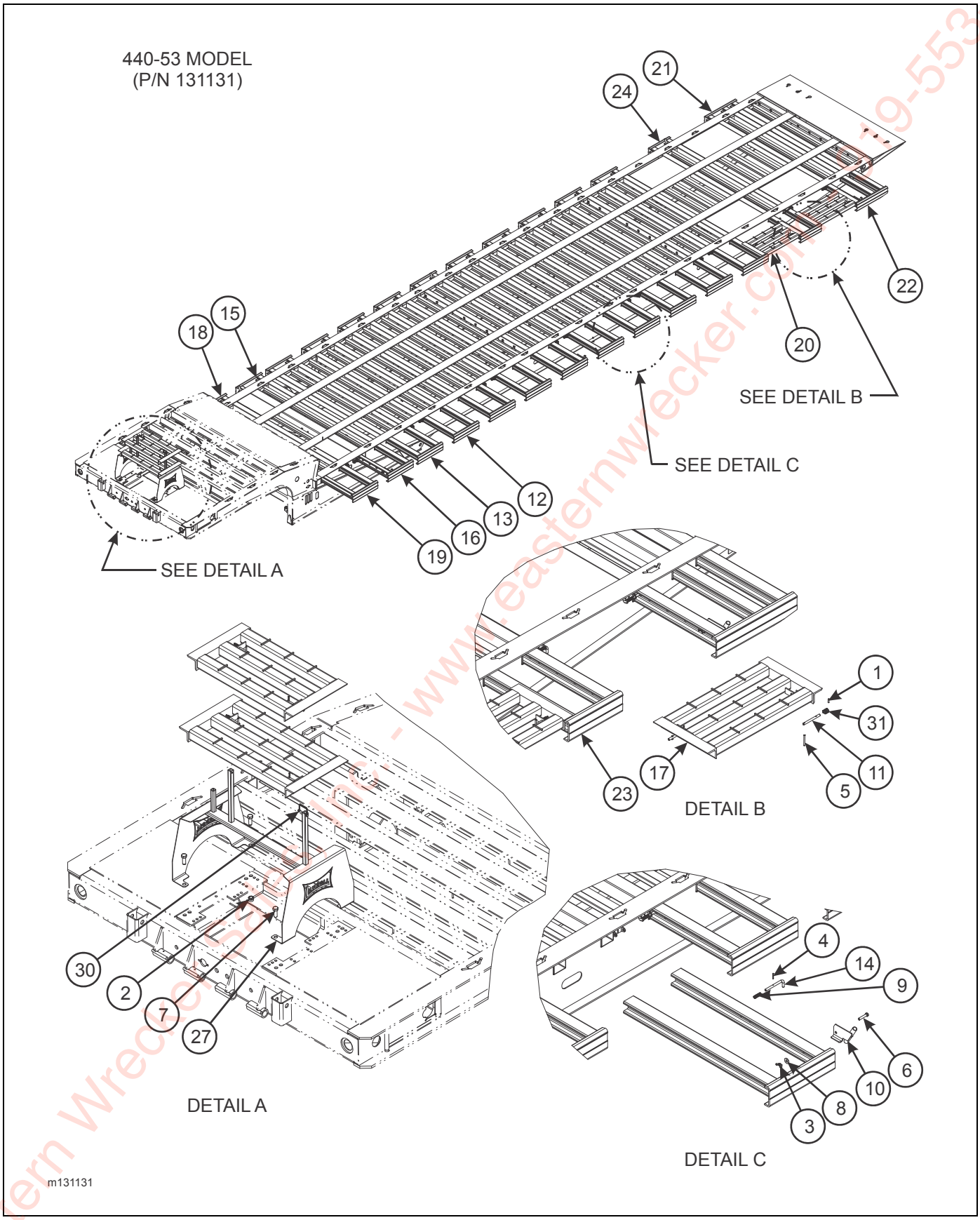

Figure 2-67: Pullout Installation (440) (3 of 3)

Eastern Wrecker Equipment - www.easternwrecker.com 519-553-4038

PULLOUT INSTALLATION (440) (OPTION)

ITEM	PART NO.	DESCRIPTION	QTY.		
	130543	PULLOUT EXTENSION INSTALLATION 440-48	*		
	131108	PULLOUT EXTENSION INSTALLATION 440-50CA		*	
	131131	PULLOUT EXTENSION INSTALLATION 440-53			*
1	0600-250-01000	PIN, ROLL 1/4 X 1	8	8	8
2	1-512-010005-15	NUT, HEX LOCK 3/4-10 GRB	4	4	4
3	1-533-010001	NUT, WING 1/2-13	6	6	6
4	1-647-010004177	PIN, SPRING SLOTTED 3/16 X 1-1/2	24	26	28
5	1-647-010004225	PIN, ROLL 1/4 X 3	8	8	8
6	1-654-010055-07	SCREW, HEX HEAD CAP 1/2-13 X 2-1/2 GR5	6	6	6
7	1-654-010061-05	SCREW, HEX HEAD CAP 3/4-10 X 2 GR5	4	4	4
8	1-861-010032-15	WASHER, FLAT 1/2W	6	6	6
9	104253	SPRING, COMPRESSION P/O EXT LOCK	24	26	28
10	108859	WELDMENT, BRACKET FLAG HOLDER	6	6	6
11	118723	PIN, SLIDE LOCK EXT	8	8	8
12	118929	PULLOUT ASSEMBLY LH	7	8	10
13	118930	PULLOUT ASSEMBLY RH	7	8	10
14	120457	PIN, P/O EXT LOCK	24	26	28
15	120458	PULLOUT ASSEMBLY FRT RH	1	1	1
16	120459	PULLOUT ASSEMBLY FRT LH	1	1	1
17	120492	EXT. WLDMT REAR WHEEL WELL	2	2	2
18	131232	PULLOUT WELDMENT AL FRT LH	1	1	1
19	131233	PULLOUT WELDMENT AL FRT RH	1	1	1
20	126609	EXTENSION WELDMENT FRT WHEEL WELL	2	2	2
21	130584	PULLOUT WELDMENT AL RH 36/14&14	--	1	--
22	130583	PULLOUT WELDMENT AL LH 36/14&14	--	1	--
23	130546	PULLOUT WELDMENT AL RH	1	1	1
24	130547	PULLOUT WELDMENT AL LH	1	1	1
25	-----	FRAME WELDMENT	REF	REF	REF
26	130585	PULLOUT WELDMENT AL REAR LH	--	1	--
27	130553	RACK WELDMENT, PULLOUT	1	1	1
28	-----	FRAME ASSEMBLY, G/N	REF	REF	REF
29	130586	PULLOUT WELDMENT AL REAR RH	--	1	--
30	516-22PTL	RETAINING PIN MUD FLAP	1	1	1
31	CO-975-74-2000	SPRING, COMPRESSION	8	8	8
32	130548	PULLOUT WELDMENT AL REAR RH	1	--	1
33	130549	PULLOUT WELDMENT AL REAR LH	1	--	1
34	130544	PULLOUT WELDMENT AL RH 27/10&10	1	--	--
35	130545	PULLOUT WELDMENT AL LH 27/10&10	1	--	--

Eastern Wrecker Sales, Inc. www.easternwrecker.com - 919-553-4038

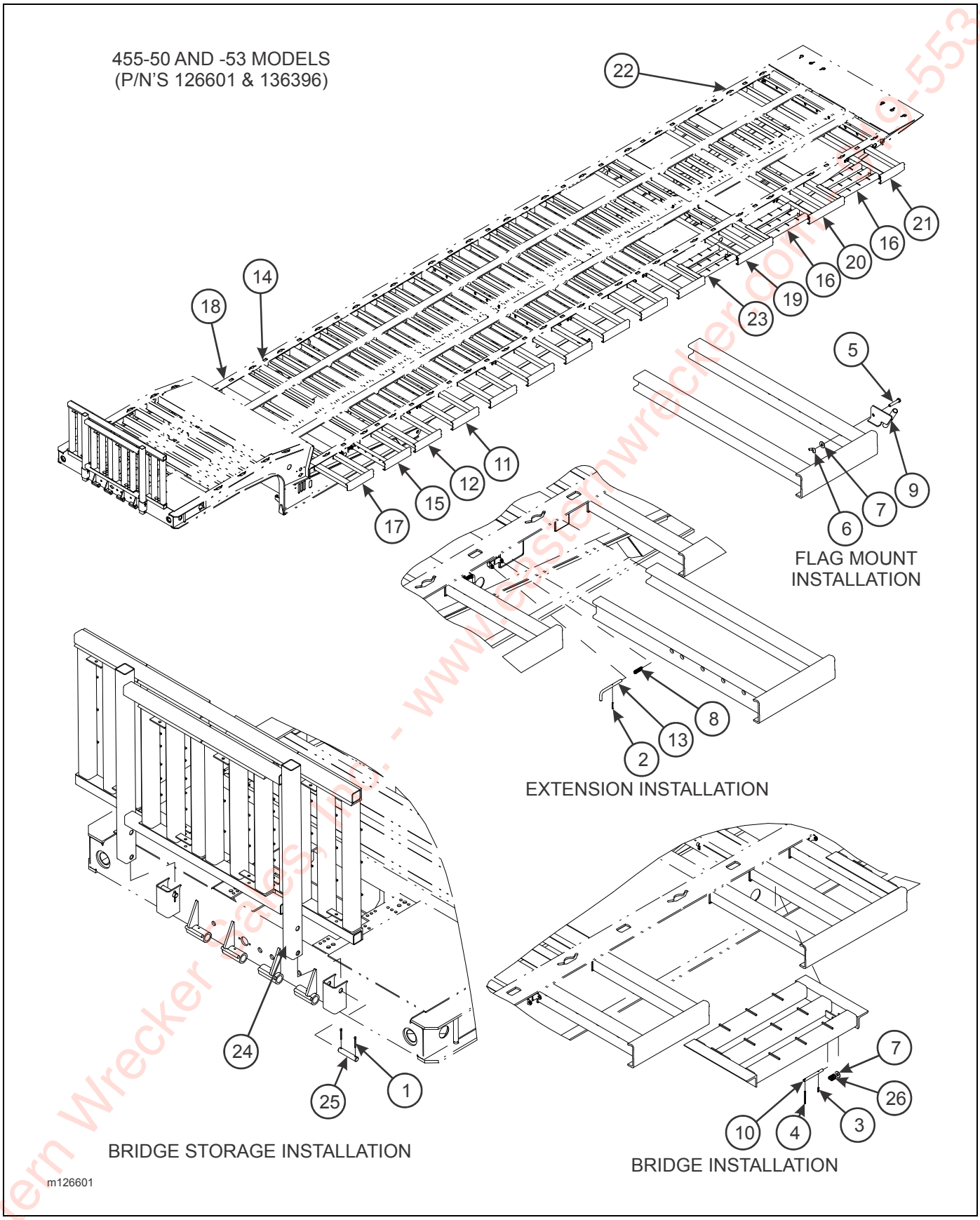

Figure 2-68: Pullout Installation (455) (1 of 3)

Eastern Wrecker Sales, Inc. - www.easternwrecker.com - 419-553-4038

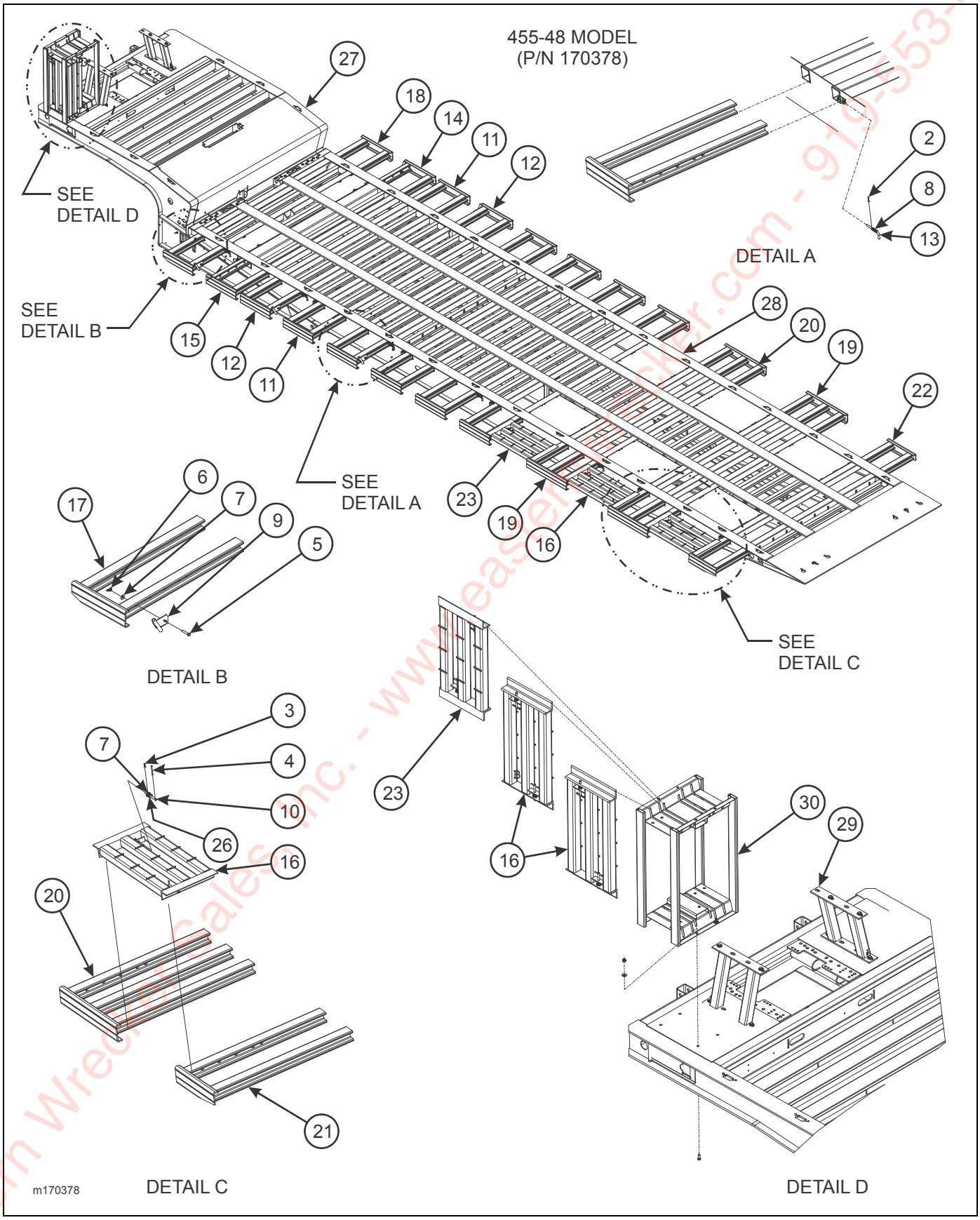

Figure 2-69: Pullout Installation (455) (2 of 3)

Eastern Wrecker Sales, Inc. - www.easternwrecker.com - 919-553-4038

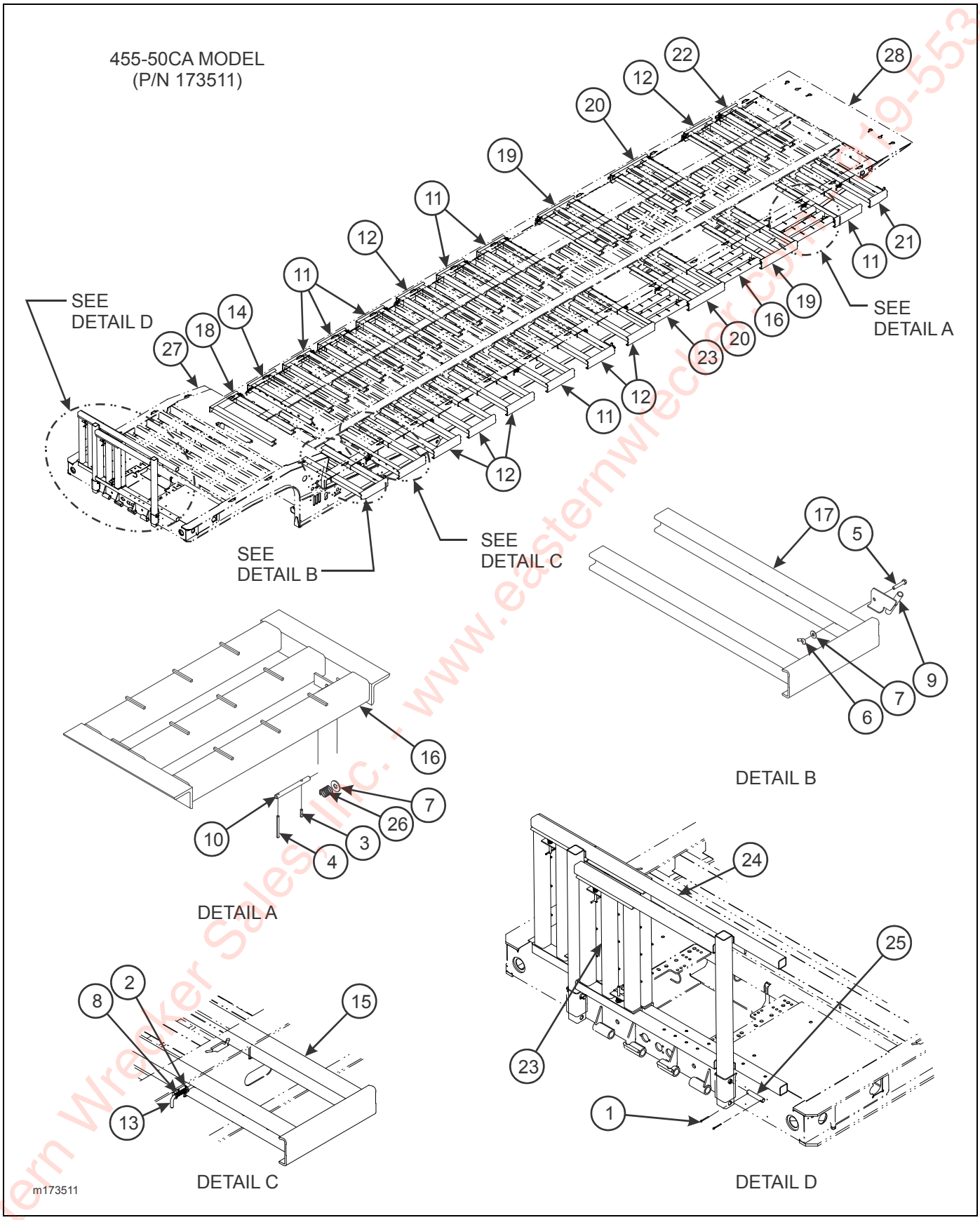

Figure 2-70: Pullout Installation (455) (3 of 3)

Eastern Wrecker Sales, Inc. ; www.easternwrecker.com 19-553-4038

PULLOUT INSTALLATION (455) (OPTION)

ITEM	PART NO.	DESCRIPTION	QTY.			
	126601	PULLOUT EXTENSION INSTALLATION 455-53	*			
	136396	PULLOUT EXTENSION INSTALLATION 455-50		*		
	170378	PULLOUT EXTENSION INSTALLATION 455-48			*	
	173511	PULLOUT EXTENSION INSTALLATION 455-50CA				*
1	1-557-010362-63	PIN, COTTER 1/4 X 2	4	4	--	4
2	1-647-010004177	PIN, SPRING SLOTTED 3/16 X 1-1/2	26	24	22	--
3	1-647-010004213	PIN, SPRING SLOTTED 1/4 X1	12	--	12	--
	0600-250-01000	PIN, ROLL 1/4 X 1	--	12	--	12
4	1-647-010004225	PIN, ROLL 1/4 X 3	12	12	12	12
5	1-654-010055-07	SCREW, HEX HEAD CAP 1/2-13 X 2-1/2 GR5	6	6	6	6
6	1-533-010001	NUT, WING 1/2-13	6	6	6	6
7	1-861-010032-15	WASHER, FLAT 1/2W	18	18	18	18
8	104253	SPRING, COMPRESSION P/O EXT LOCK	26	24	22	24
9	108859	WELDMENT, BRACKET FLAG HOLDER	6	6	6	6
10	118723	PIN, SLIDE LOCK EXT	12	12	12	12
11	118929	PULLOUT ASSEMBLY LH	8	6	6	7
12	118930	PULLOUT ASSEMBLY RH	8	6	6	7
13	120457	PIN, P/O EXT LOCK	26	24	22	24
14	120458	PULLOUT ASSEMBLY FRT RH	1	1	1	1
15	120459	PULLOUT ASSEMBLY FRT LH	1	1	1	1
16	120492	EXT. WLDMT REAR WHEEL WELL	4	4	4	4
17	122913	PULLOUT CLIPPED RH	1	1	1	1
18	122916	PULLOUT CLIPPED	1	1	1	1
19	126602	PULLOUT WELDMENT AL WHEEL WELL RH	2	2	2	2
20	126603	PULLOUT WELDMENT AL WHEEL WELL LH	2	2	2	2
21	126605	PULLOUT WELDMENT AL REAR LH	1	1	1	--
	130585	PULLOUT WELDMENT AL REAR LH	--	--	--	1
22	126606	PULLOUT WELDMENT AL REAR RH	1	1	1	--
	130586	PULLOUT WELDMENT AL REAR RH	--	--	--	1
23	126609	EXTENSION WELDMENT FRT WHEEL WELL	2	2	2	2
24	126610	RACK WLDMT STORAGE EXT BRIDGES	1	1	--	1
25	2-557-010006	PIN, 1 X 6-1/2	2	--	--	--
	6-557-010163	PIN, 1 X 5-1/8	--	2	--	2
26	CO-975-74-2000	SPRING, COMPRESSION	12	12	12	12
27	-----	FRAME ASSEMBLY, G/N	REF	REF	REF	REF
28	-----	FRAME WELDMENT	REF	REF	REF	REF
29	136578	UPPER DECK STAND INSTALLATION	--	--	REF	--
30	136828	RACK, UPPER DECK EXTENSION BRIDGE STORAGE (USED W/ ENG PKG) (SEE PAGE 2-127)	--	--	1	--

Eastern Wrecker Sales, Inc. www.easternwrecker.com - 919-553-4038

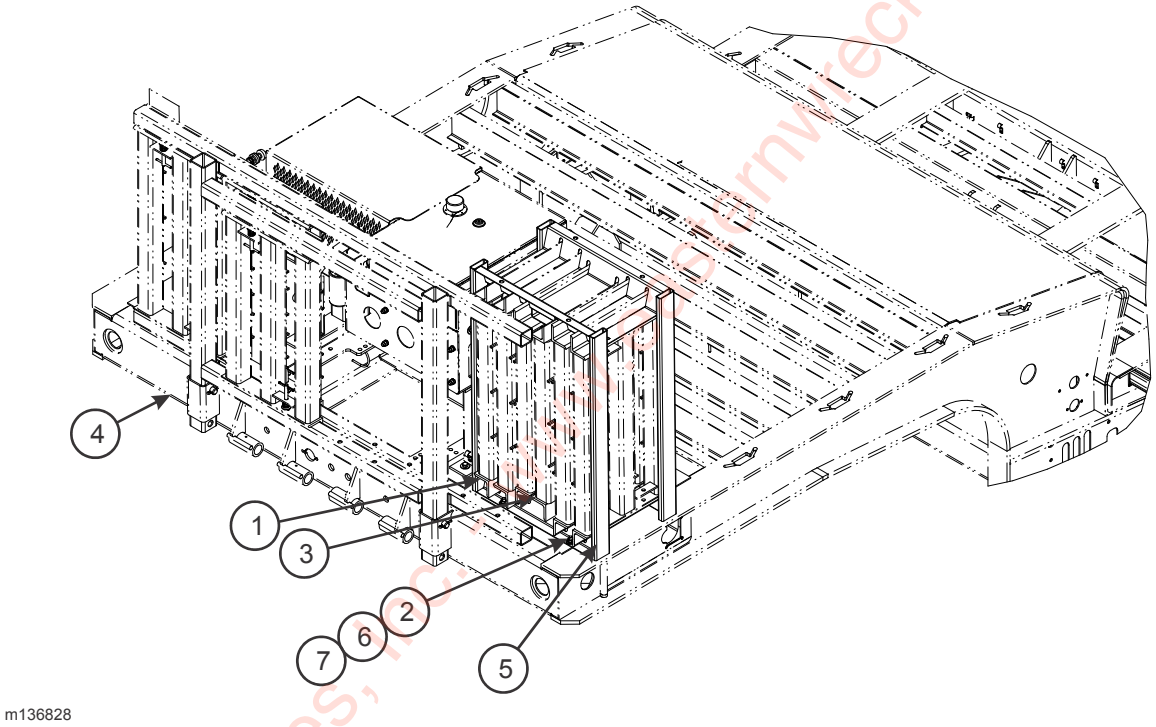

Figure 2-71: Upper Deck Extension Bridge Storage Rack (Option)

Eastern Wrecker Sales, Inc. - www.easternwrecker.com - 919-553-4038

UPPER DECK EXTENSION BRIDGE STORAGE RACK (OPTION)

ITEM	PART NO.	DESCRIPTION	QTY.
	136828	UPPER DECK EXTENSION BRIDGE STORAGE RACK (OPTION)	
1	120492	EXTENSION WELDMENT, REAR WHEEL WELL	REF
2	124971	NUT, FLANGE HEAD SPIRALOCK 1/2-13	4
3	126609	EXTENSION WELDMENT, FRONT WHEEL WELL	REF
4	136396	P/O EXTENSION INSTALLATION (SEE PAGE 2-125)	REF
5	136829	RACK WELDMENT U/D STOR EXT BRIDGE	1
6	1-654-010055-02	SCREW, HEX HEAD CAP 1/2-13 X 1-1/4 GR5	4
7	1-861-010032-15	WASHER, FLAT 1/2W	4

Eastern Wrecker Sales, Inc. - www.easternwrecker.com - 919-553-4038

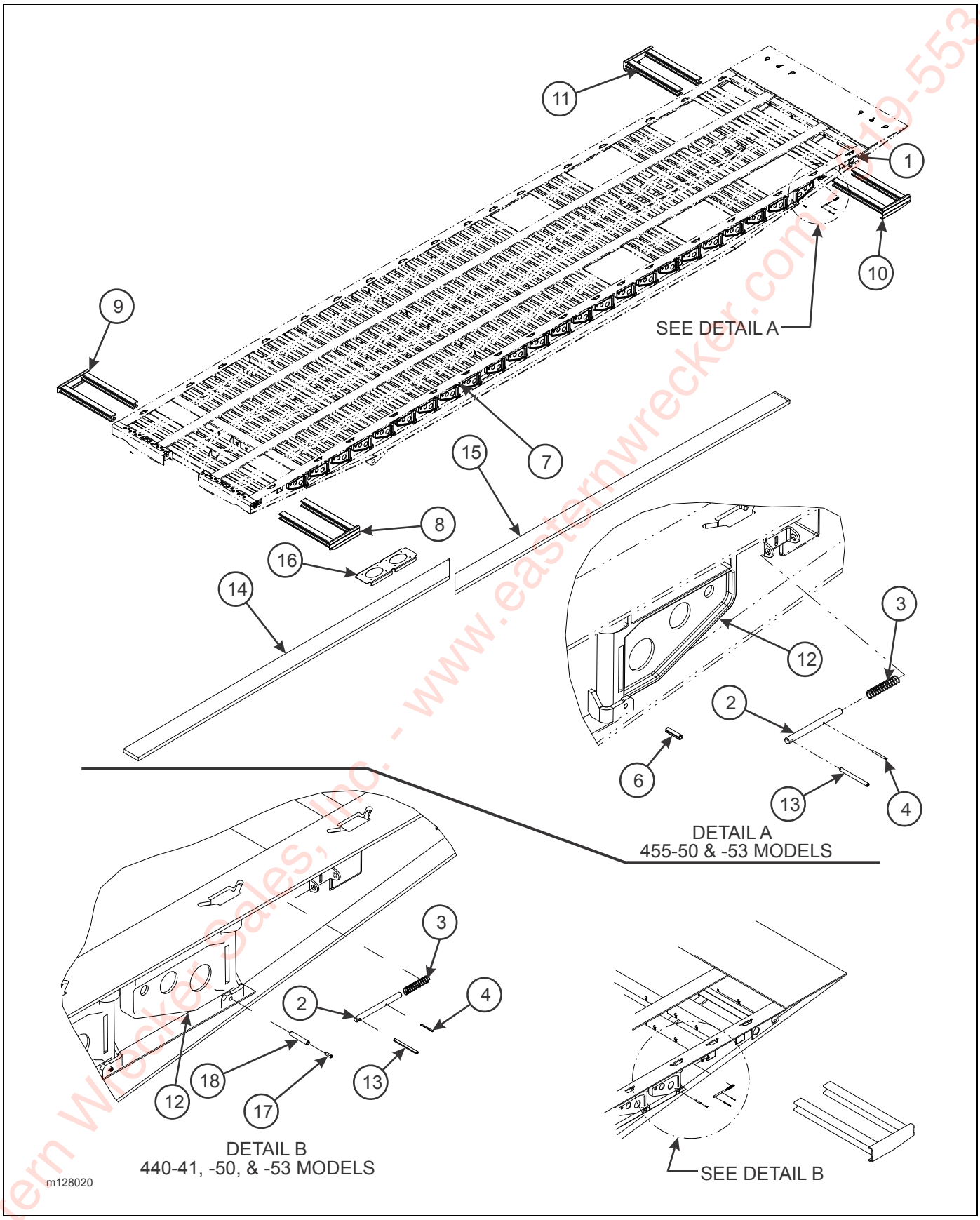

Figure 2-72: Outrigger Installation (Option)

Eastern Wrecker Sales, Inc. - www.easternwrecker.com - 519-553-4038

OUTRIGGER INSTALLATION (OPTION)

ITEM	PART NO.	DESCRIPTION	QTY.					
	128020	OUTRIGGER INSTALLATION (455-50)	*					
	136399	OUTRIGGER INSTALLATION (455-53)		*				
	137894	OUTRIGGER INSTALLATION (440-48)			*			
	150188	OUTRIGGER INSTALLATION (440-53)				*		
	152673	OUTRIGGER INSTALLATION (440-41)					*	
	141628	OUTRIGGER PLANKS						*
1	1-343-010007	GROMMET	2	2	--	--	--	--
2	128539	PIN, SLIDE LOCK	4	4	4	4	4	--
3	104253	SPRING, COMPRESSION P/O EXT LOCK	4	4	4	4	4	--
4	125520	ROLL PIN, SLOTTED 1/8 X 1-1/2	4	4	4	4	4	--
6	0600-375-01500	ROLL PIN, SLOTTED 3/8 X 1-1/2	48	52	--	--	--	--
7	-----	FRAME WELDMENT	REF	REF	REF	REF	REF	REF
8	128226	PULLOUT WELDMENT FRONT LH	1	1	--	--	--	--
	137892	PULLOUT WELDMENT ALUM FRT LH	--	--	1	1	1	--
9	128227	PULLOUT WELDMENT FRONT RH	1	1	--	--	--	--
	137893	PULLOUT WELDMENT ALUM FRT RH	--	--	1	1	1	--
10	128228	PULLOUT WELDMENT REAR LH	1	1	1	1	1	--
11	128229	PULLOUT WELDMENT REAR RH	1	1	1	1	1	--
12	167-0022	OUTRIGGER CAST FOR 10 CHANNEL	48	52	44	52	34	--
13	1-647-010004225	ROLL PIN, SLOTTED 1/4 X 3	4	4	4	4	4	--
14	141629	PLANK, OUTRIGGER FRONT	--	--	--	--	--	2
15	141636	PLANK, OUTRIGGER REAR	--	--	--	--	--	2
16	141637	SUPPORT, OUTRIGGER PLANK	--	--	--	--	--	2
17	127711	ROLL PIN, SLOTTED 1/4 X 3/4 (137894,150188,152673)	--	--	44	52	34	--
18	127712	ROLL PIN, SLOTTED 3/8 X 2-1/4	--	--	44	52	34	--

Eastern Wrecker Sales, Inc. - www.easternwrecker.com - 919-553-4038

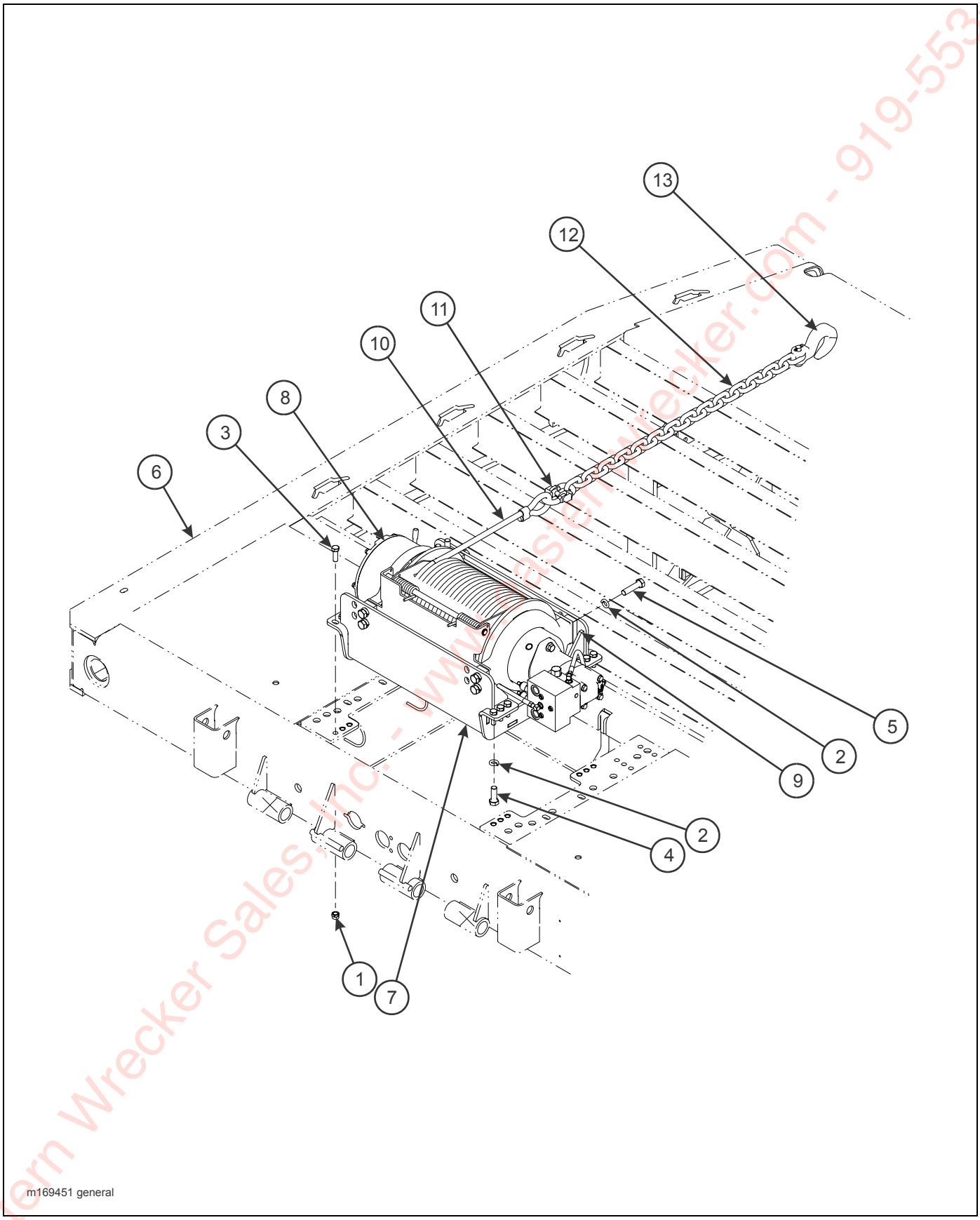

Figure 2-73: 20K Winch Installation, General Items (Warn)

Eastern Wrecker Sales, Inc. - www.easternwrecker.com - 919-553-4038

20K WINCH INSTALLATION, GENERAL ITEMS (WARN)

ITEM	PART NO.	DESCRIPTION	QTY.		
	151818	WINCH INSTALLATION, 20K STD.	*		
	169452	WINCH INSTALLATION, 20K ARCTIC		*	
	169453	WINCH INSTALLATION, 20K HD			*
1	1-512-010002-09	NUT, HEX LOCK 1/2-13 GRC	12	12	12
2	1-861-010034-15	WASHER, SPLIT LOCK 5/8	16	16	16
3	108439	SCREW, HEX HEAD CAP 1/2-13 X 1-1/2 GR8	12	12	12
4	109740	SCREW, HEX HEAD CAP 5/8-11 X 1-3/4 GR8	8	8	8
5	113299	SCREW, HEX HEAD CAP 5/8-11 X 2-1/2 GR8	8	8	8
6	-----	GOOSENECK WELDMENT	REF	REF	REF
7	151817	MOUNT WELDMENT, WINCH WARN	1	1	1
8	151819	WINCH, 20K WARN AR KO (SEE PAGE 2-135)	1	1	1
9	154234	SPACER, WINCH	4	4	4
10	3-155-010018-6	CABLE, 5/8 X 85’	REF	REF	REF
11	3-174-010038	CHAIN LINK, CONNECTING 1/2	1	1	1
12	3-174-010039036	CHAIN, 1/2 X 36	1	1	1
13	7HCGHT500	HOOK, CLEVIS GRAB 1/2	1	1	1

Eastern Wrecker Sales, Inc. - www.easternwrecker.com - 919-553-4038

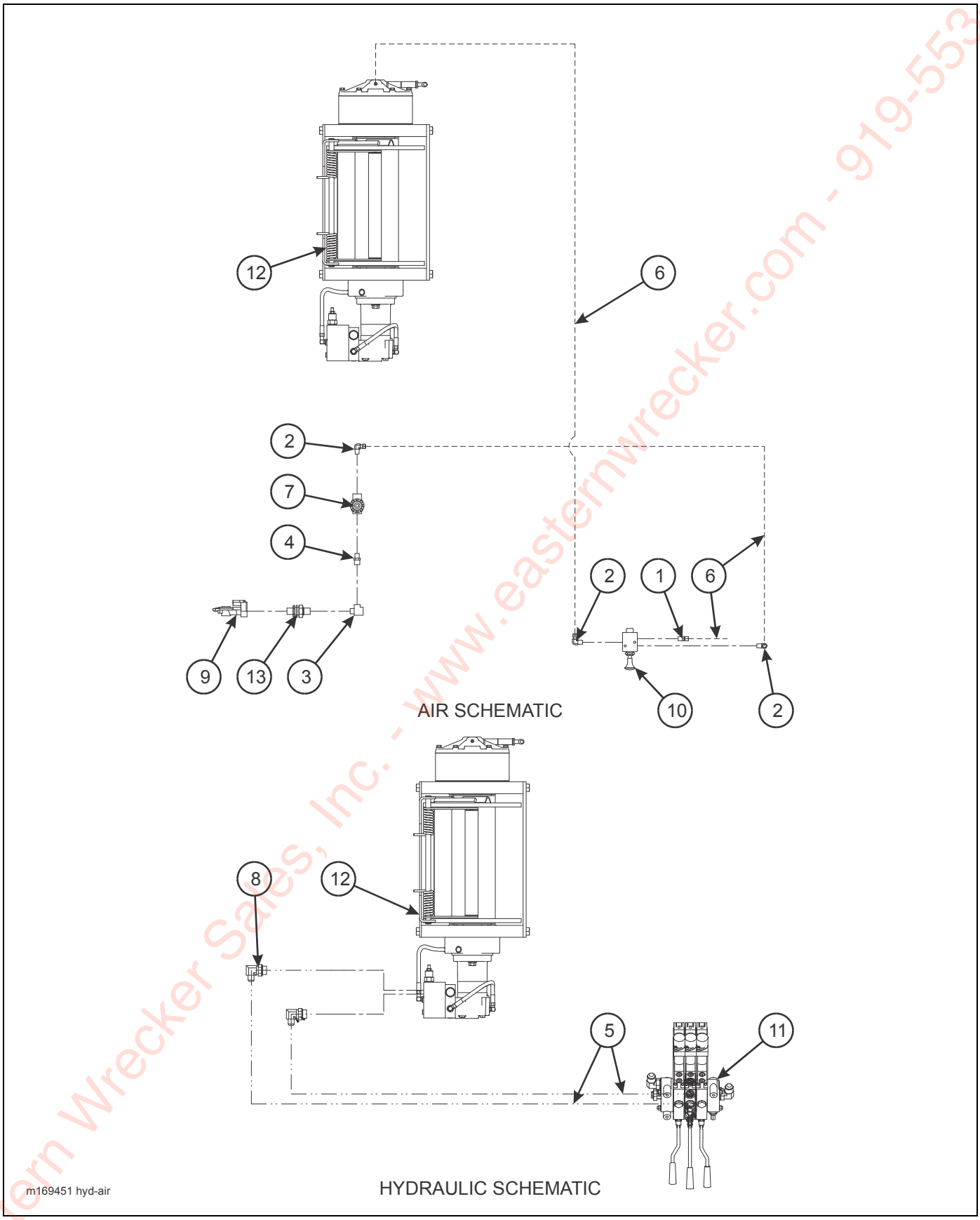

Figure 2-74: 20K Winch Installation, Hydraulic/Air Items (Warn)

Eastern Wrecker Sales, Inc. - www.easternwrecker.com - 919-553-4038

20K WINCH INSTALLATION, HYDRAULIC/AIR ITEMS (WARN)

ITEM	PART NO.	DESCRIPTION	QTY.		
	151818	WINCH INSTALLATION, 20K STD.	*		
	169452	WINCH INSTALLATION, 20K ARCTIC		*	
	169453	WINCH INSTALLATION, 20K HD			*
1	1-297-010007-05	FITTING, AIR	1	--	1
2	1-297-010008-07	FITTING, AIR 90	3	--	3
3	1-297-010018-03	FITTING, BRS PIPE ST TEE	REF	REF	REF
4	1-297-010019-05	FITTING, BRS PIPE HEX	1	1	1
5	1-397-010302172	HOSE ASSEMBLY 1/2 X 172	2	--	2
	1-397-010302220	HOSE ASSEMBLY 1/2 X 220	REF	--	2
	139928	HOSE, 1/2 X 172 ARCTIC	--	2	--
6	1-833-010001	TUBING, NYLON 1/4 OD	AR	--	AR
	126629	TUBING, NYLON 1/4 OD ARCTIC	--	AR	--
7	905-54-107	BRAKE PROTECTION VALVE	1	1	1
	167692	FILTER	1	1	1
8	2062-12-8S	ADAPTER, 90	2	2	2
9	108801	GLAD HAND, RED AIR	REF	REF	REF
10	134657	VALVE, AIR 3 WAY/2 POS	1	1	1
11	139525	VALVE ASSEMBLY, THREE SPOOL	REF	REF	REF
12	151819	WINCH, 20K WARN AR KO (SEE PAGE 2-135)	REF	REF	REF
13	55B61	FRAME UNION	REF	REF	REF

Eastern Wrecker Sales, Inc. - www.easternwrecker.com - 919-553-4038

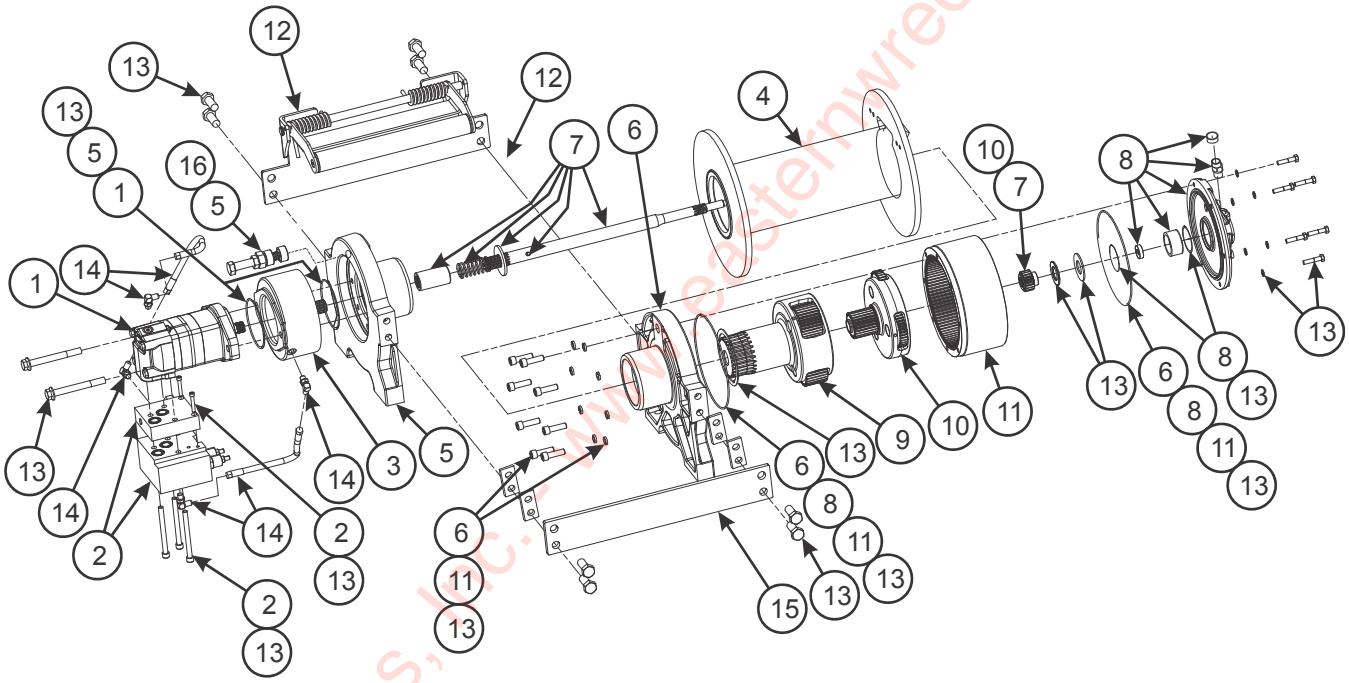

Figure 2-75: 20K Winch Items (Warn)

Eastern Wrecker Sales, Inc. - www.easternwrecker.com - 919-553-4038

20K WINCH ITEMS (WARN)

ITEM	PART NO.	DESCRIPTION	QTY.
	151819	WINCH, 20K WARN AIR KICKOUT	
1	167818	SERVICE KIT - MOTOR HYDRAULIC 11.9CI	1
2	161590	SERVICE KIT - MANIFOLD HYDRAULIC	1
3	162207	SERVICE KIT - BRAKE ASSEMBLY	1
4	162208	SERVICE KIT - DRUM ASSEMBLY 20K LONG	1
5	167819	SERVICE KIT - DRUM RETARDER DRUM SUPPORT	1
6	162210	SERVICE KIT - DRUM SUPPORT, GEAR END	1
7	162211	SERVICE KIT - DRIVE SHAFT, LONG	1
8	167820	SERVICE KIT - END HSG ASSY AIR	1
9	162213	SERVICE KIT - CARRIER, STAGE 2 6.0-4.75	1
10	162214	SERVICE KIT - CARRIER, STAGE 1 6.0-4.75	1
11	162215	SERVICE KIT - RING GEAR	1
12	162216	SERVICE KIT - TENSIONER LONG	1
13	162217	SERVICE KIT - HARDWARE SEAL	1
14	162218	SERVICE KIT - HOSE HYDRAULIC	1
15	162219	SERVICE KIT - TIE PLATE LONG	1
16	167821	SERVICE KIT - DRUM RETARDER	1
17	162220	WIRE ROPE ASSEMBLY 9/16 X 245’ (NOT SHOWN)	1

Eastern Wrecker Sales, Inc. - www.easternwrecker.com - 919-553-4038

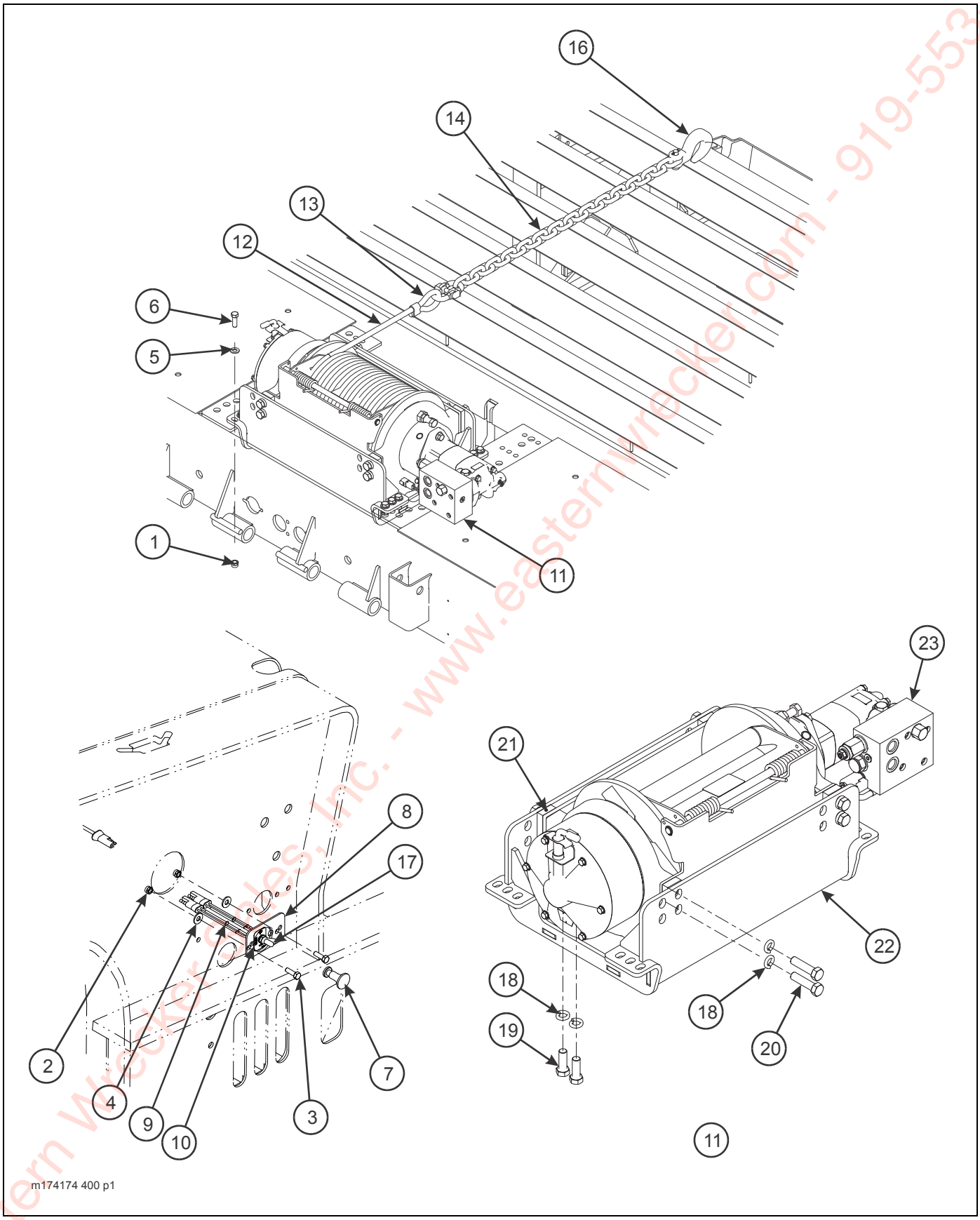

Figure 2-76: Winch Installation, 20K 2 Speed General Items (Warn)

Eastern Wrecker Sales, Inc. - www.easternwrecker.com - 919-553-4038

WINCH INSTALLATION, 20K 2 SPEED GENERAL ITEMS (WARN)

ITEM	PART NO.	DESCRIPTION	QTY.	
	167522	WINCH INSTALLATION, 20K 2 SPEED	*	
	174175	WINCH INSTALLATION, 20K 2 SPEED		*
1	1-512-010002-09	NUT, HEX LOCK 1/2-13 GRC	12	12
2	1-512-010005-03	NUT, HEX LOCK 5/16-18 GRB	2	2
3	1-654-010049-05	SCREW, HEX HEAD CAP 5/16-18 X 1 GR5	2	2
4	1-861-010032-09	WASHER, FLAT 5/16W	2	2
5	1-861-010032-14	WASHER, FLAT 1/2	12	12
6	108439	SCREW, HEX HEAD CAP 1/2-13 X 1-1/2 GR8	12	12
7	134657	VALVE, AIR 3 WAY/2 POS	REF	REF
8	137987	MOUNT, ELECTRICAL SWITCH	1	1
9	150117	TOGGLE SWITCH SEALED SPST	REF	REF
10	174043	DECAL, WINCH HI/LO	1	1
11	174553	20K WARN WINCH ASSEMBLY (ITEMS 18 - 23)	1	1
12	3-155-010018-6	CABLE, 5/8 X 85’	REF	REF
13	3-174-010038	CHAIN LINK, CONNECTING 1/2	1	1
14	3-174-010039036	CHAIN, 1/2 X 36	1	1
15	3-368-010252	HARNESS ASSEMBLY, BULKHEAD LIGHT EXTENSION (NOT SHOWN)	1	1
16	7HCGHT500	HOOK, CLEVIS GRAB 1/2	1	1
17	81264	RUBBER BOOT FOR ELECT SWITCH	REF	REF
18	1-861-010034-15	WASHER, SPLIT LOCK 5/8	16	16
19	109740	SCREW, HEX HEAD CAP 5/8-11 X 1-3/4 GR8	8	8
20	113299	SCREW, HEX HEAD CAP 5/8-11 X 2-1/2 GR8	8	8
21	154234	SPACER, WINCH	4	4
22	165429	MOUNT WELDMENT, WINCH WARN	1	1
23	174551	WARN WINCH INSTALLATION (SEE PAGE 2-141)	1	1

Eastern Wrecker Sales, Inc. - www.easternwrecker.com - 919-553-4038

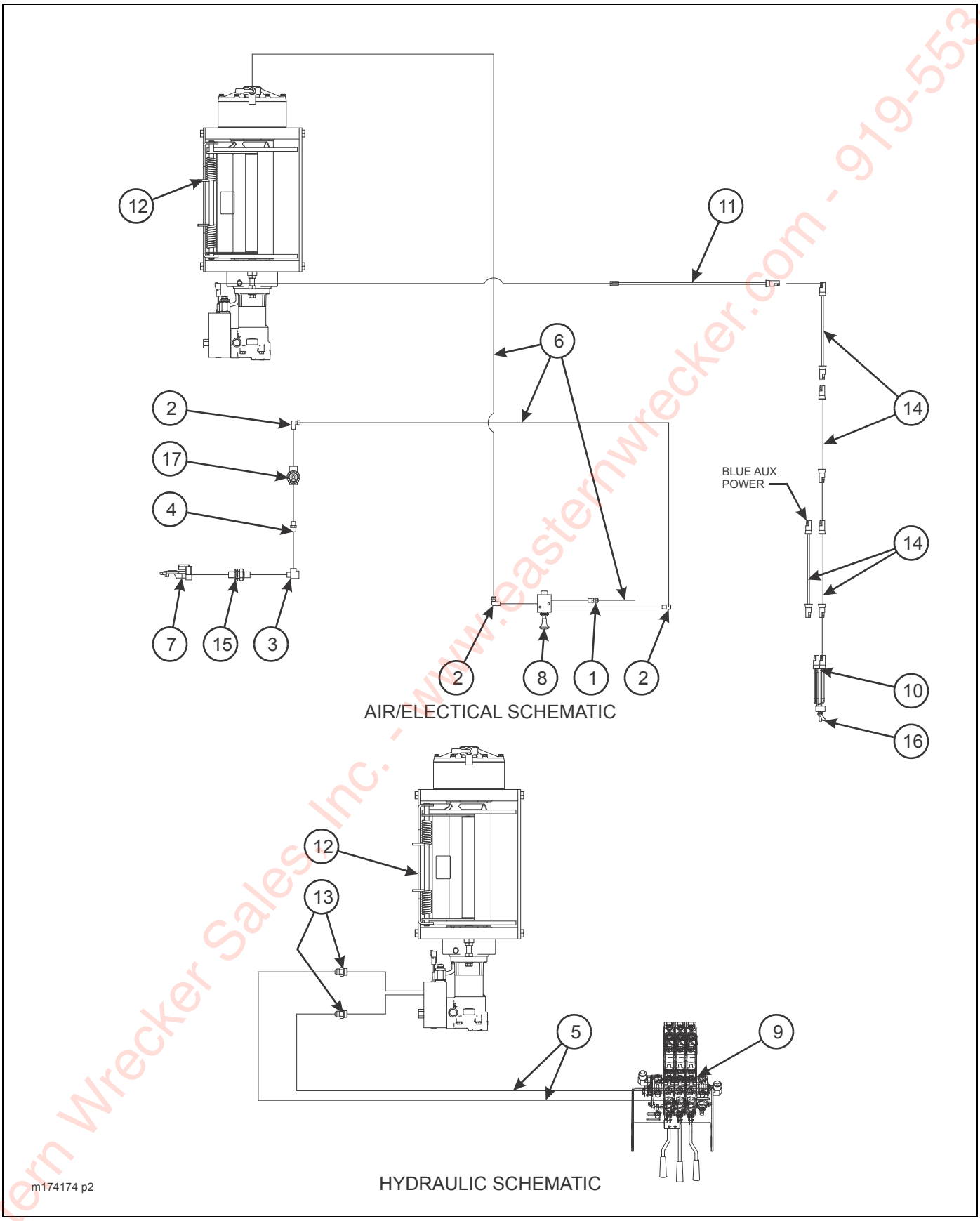

Figure 2-77: Winch Installation, 20K 2 Speed General Items (Warn)

Eastern Wrecker Sales, Inc. - www.easternwrecker.com - 919-553-4038

WINCH INSTALLATION, 20K 2 SPEED HYDRAULIC/ELECTRICAL ITEMS (WARN)

ITEM	PART NO.	DESCRIPTION	QTY.	
	167522	WINCH INSTALLATION, 20K 2 SPEED	*	
	174175	WINCH INSTALLATION, 20K 2 SPEED		*
1	1-297-010007-05	FITTING, AIR	1	1
2	1-297-010008-07	FITTING, AIR 90	3	3
3	1-297-010018-03	FITTING, BRASS PIPE TEE	REF	REF
4	1-297-010019-05	FITTING BRASS PIPE HEX	1	1
5	1-397-010302220	HOSE ASSEMBLY 1/2 X 220	--	2
	174188	HOSE ASSEMBLY 1/2 X 182	2	--
6	1-833-010001	TUBING, NYLON 1/4 OD	AR	AR
7	108801	GLAD HAND, RED AIR	REF	REF
8	134657	VALVE, AIR 3 WAY/2 POS	1	1
9	139525	VALVE ASSEMBLY, 3 SPOOL	REF	REF
10	150117	TOGGLE SWITCH SEALED SPST	REF	REF
11	164053	HARNESS, BRANCH WORK LIGHT 102’”	1	1
12	174553	20K WARN WINCH ASSEMBLY (SEE PAGE 2-137)	REF	REF
13	202702-10-8S	ADAPTER	2	2
14	3-368-010252	HARNESS ASSEMBLY, BULKHEAD LIGHT EXTENSION	4	4
15	55B61	FRAME UNION	REF	REF
16	81264	RUBBER BOOT FOR ELECT SWITCH	1	1
17	905-54-107	BRAKE PROTECTION VALVE	1	1

Eastern Wrecker Sales, Inc. - www.easternwrecker.com - 919-553-4038

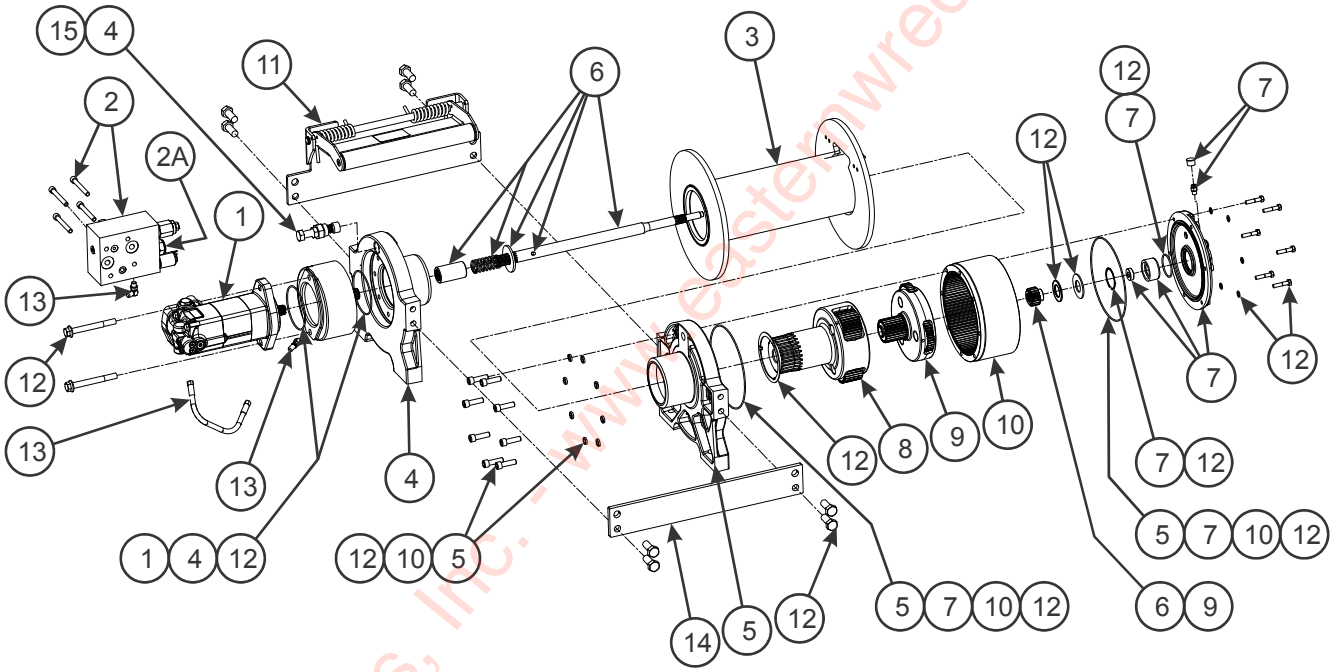

Figure 2-78: 20K Winch Items (Warn)

Eastern Wrecker Sales, Inc. - www.easternwrecker.com - 919-553-4038

20K 2 SPEED WINCH ITEMS (WARN)

ITEM	PART NO.	DESCRIPTION	QTY.
	167521	WINCH, 20K WARN 2 SPEED	
1	178718	SERVICE KIT, MOTOR HYDRAULIC 11.9 CI-SPD	1
2	178715	SERVICE KIT, MANIFOLD HYDRAULIC	1
2A	199104	SOLENOID FOR 2SP WARN, 20K-30K	1
3	162208	SERVICE KIT, DRUM ASSEMBLY 20K LONG	1
4	178999	SERVICE KIT, DRUM RETARDER DRUM SUPPORT	1
5	162210	SERVICE KIT, DRUM SUPPORT GEAR END	1
6	162211	SERVICE KIT, DRIVESHAFT LONG	1
7	162941	SERVICE KIT, END HOUSING ASSEMBLY AIR	1
8	162213	SERVICE KIT, CARRIER STAGE 2-6.0-4.75	1
9	162214	SERVICE KIT, STAGE 1-6.0-4.75	1
10	162215	SERVICE KIT, RING GEAR	1
11	162216	SERVICE KIT, TENSIONER LONG	1
12	179000	SERVICE KIT, HARDWARE SEAL	1
13	162218	SERVICE KIT, HOSE HYDRAULIC	1
14	162219	SERVICE KIT, TIE PLATE LONG	1
15	179001	SERVICE KIT, DRUM RETARDER	1
16	162220	SERVICE KIT, WIRE ROPE ASSEMBLY 9/16 X 245’	1
17	162207	SERVICE KIT, BRAKE ASSEMBLY	1

Eastern Wrecker Sales, Inc. - www.easternwrecker.com - 919-553-4038

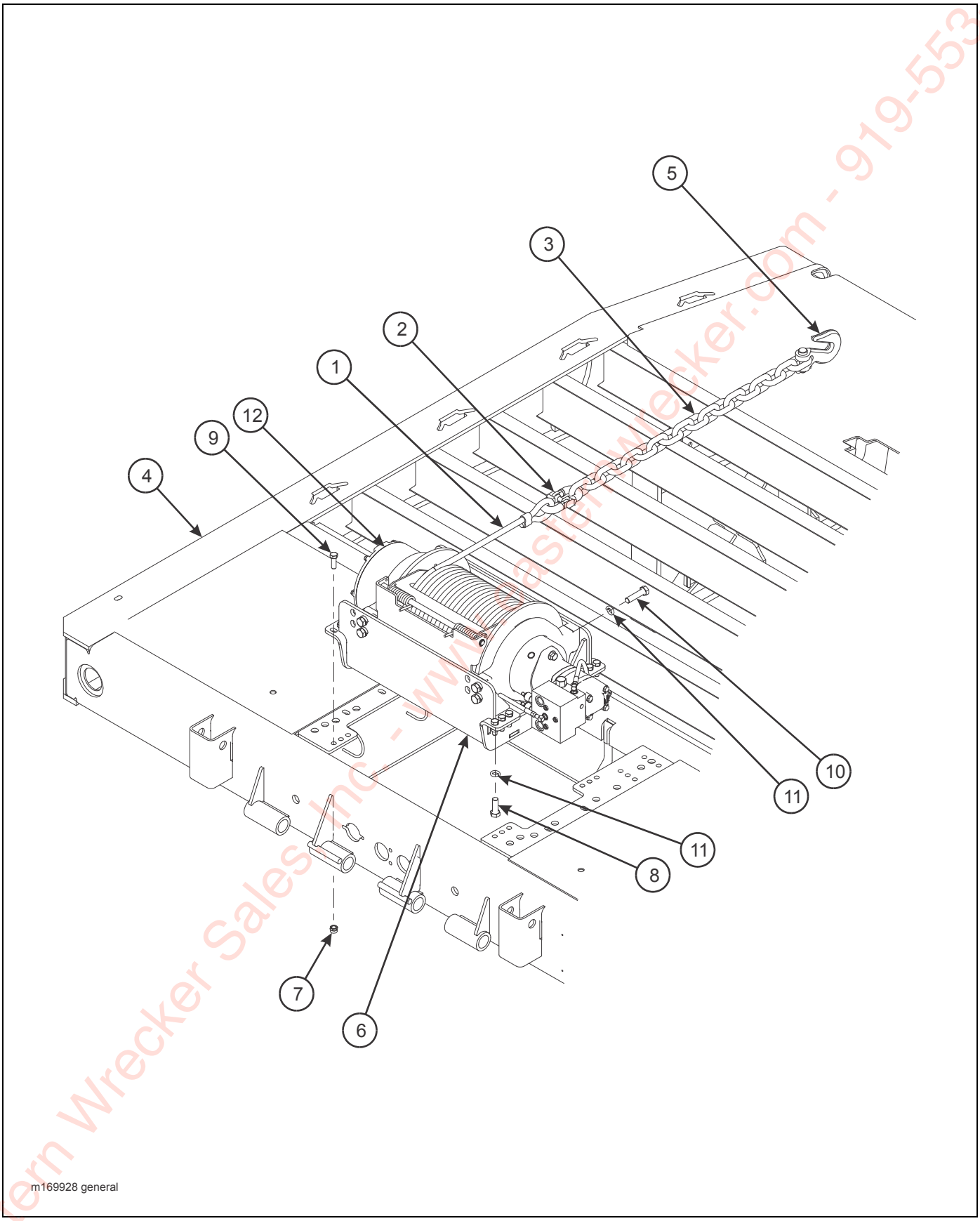

Figure 2-79: 30KWinch Installation, General Items (Warn)

Eastern Wrecker Sales, Inc. - www.easternwrecker.com - 919-553-4038

30K WINCH INSTALLATION, GENERAL ITEMS (WARN)

ITEM	PART NO.	DESCRIPTION	QTY.		
	155411	WINCH INSTALLATION, 30K WARN STD	*		
	169929	WINCH INSTALLATION, 30K WARN HD		*	
	169930	WINCH INSTALLATION, 30K WARN ARCTIC			*
1	132833	CABLE ASSEMBLY, 5/8 X 85 FLEX-X9	REF	REF	REF
2	3-174-010059	CHAIN LINK CONNECTING 5/8	1	1	1
3	3-174-010039036	CHAIN, 1/2 X 36	1	1	1
4	-----	GOOSENECK WELDMENT	REF	REF	REF
5	1-382-010035-06	HOOK, CLEVIS GRAB 5/8 GRD80	1	1	1
6	151817	MOUNT WELDMENT, WINCH WARN	1	1	1
7	1-512-010002-09	NUT, HEX LOCK 1/2-13 GRC	12	12	12
8	109740	SCREW, HEX HEAD CAP 5/8-11 X 1-3/4 GR8	8	8	8
9	108439	SCREW, HEX HEAD CAP 1/2-13 X 1-1/2 GR8	12	12	12
10	113299	SCREW, HEX HEAD CAP 5/8-11 X 2-1/2 GR8	8	8	8
11	1-861-010034-15	WASHER, SPLIT LOCK 5/8	16	16	16
12	155410	WINCH, 30K WARN AIR KO (SEE PAGE 2-151)	1	1	1

Eastern Wrecker Sales, Inc. - www.easternwrecker.com - 919-553-4038

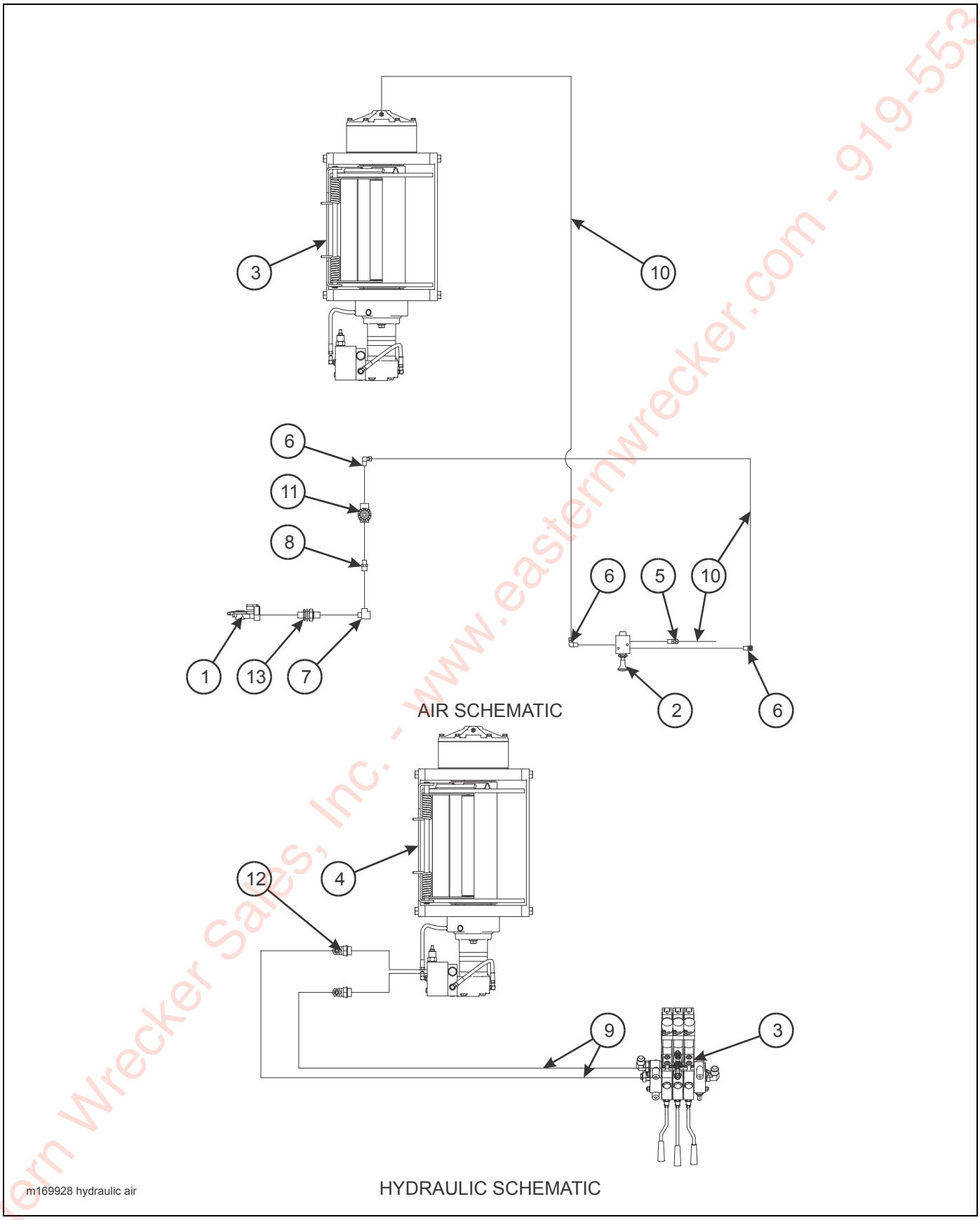

Figure 2-80: 30K Winch Installation, Hydraulic/Air Items (Warn)

Eastern Wrecker Sales, Inc. - www.easternwrecker.com - 919-553-4038

30K WINCH INSTALLATION, HYDRAULIC/AIR ITEMS (WARN)

ITEM	PART NO.	DESCRIPTION	QTY.		
	155411	WINCH INSTALLATION, 30K WARN STD	*		
	169929	WINCH INSTALLATION, 30K WARN HD		*	
	169930	WINCH INSTALLATION, 30K WARN ARCTIC			*
1	108801	GLAD HAND, RED AIR	REF	REF	REF
2	134657	VALVE, AIR 3 WAY/2 POS	1	1	1
3	139525	VALVE ASSEMBLY, THREE SPOOL	REF	REF	REF
4	155410	WINCH, 30K WARN AIR KO (SEE PAGE 2-151)	REF	REF	REF
5	1-297-010007-05	FITTING, AIR	1	1	--
	126862	FITTING, COMPR STRAIGHT	--	--	1
6	1-297-010008-07	FITTING, AIR 90	3	3	--
	126677	FITTING, AIR 90			3
7	1-297-010018-03	FITTING, BRS PIPE ST TEE	REF	REF	REF
8	1-297-010019-05	FITTING, BRS PIPE HEX	1	1	1
9	1-397-010302172	HOSE ASSEMBLY 1/2 X 172	2	--	2
	1-397-010302220	HOSE ASSEMBLY 1/2 X 220	--	2	--
	139928	HOSE, 1/2 X 172 ARCTIC	--	--	2
10	1-833-010001	TUBING, NYLON 1/4 OD	AR	AR	--
	126629	TUBING, NYLON 1/4 OD ARCTIC	--	--	AR
11	905-54-107	BRAKE PROTECTION VALVE	1	1	1
	167692	FILTER	1	1	1
12	2062-12-8S	ADAPTER, 90	2	2	2
13	55B61	FRAME UNION	REF	REF	REF

Eastern Wrecker Sales, Inc. - www.easternwrecker.com - 919-553-4038

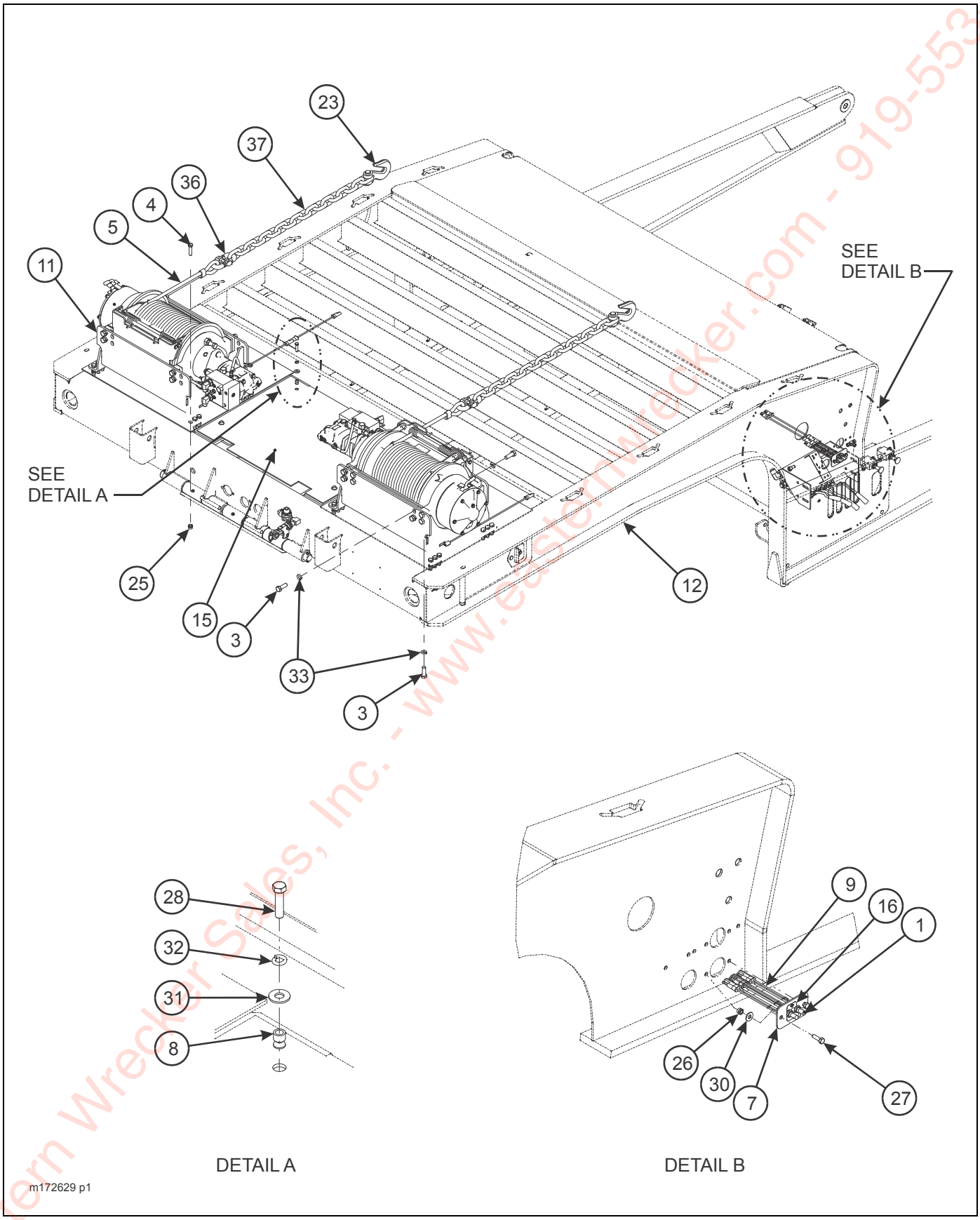

Figure 2-81: Dual Winch Installation, 30K (Warn) (1 of 3)

Eastern Wrecker Sales, Inc. - www.easternwrecker.com - 919-553-4038

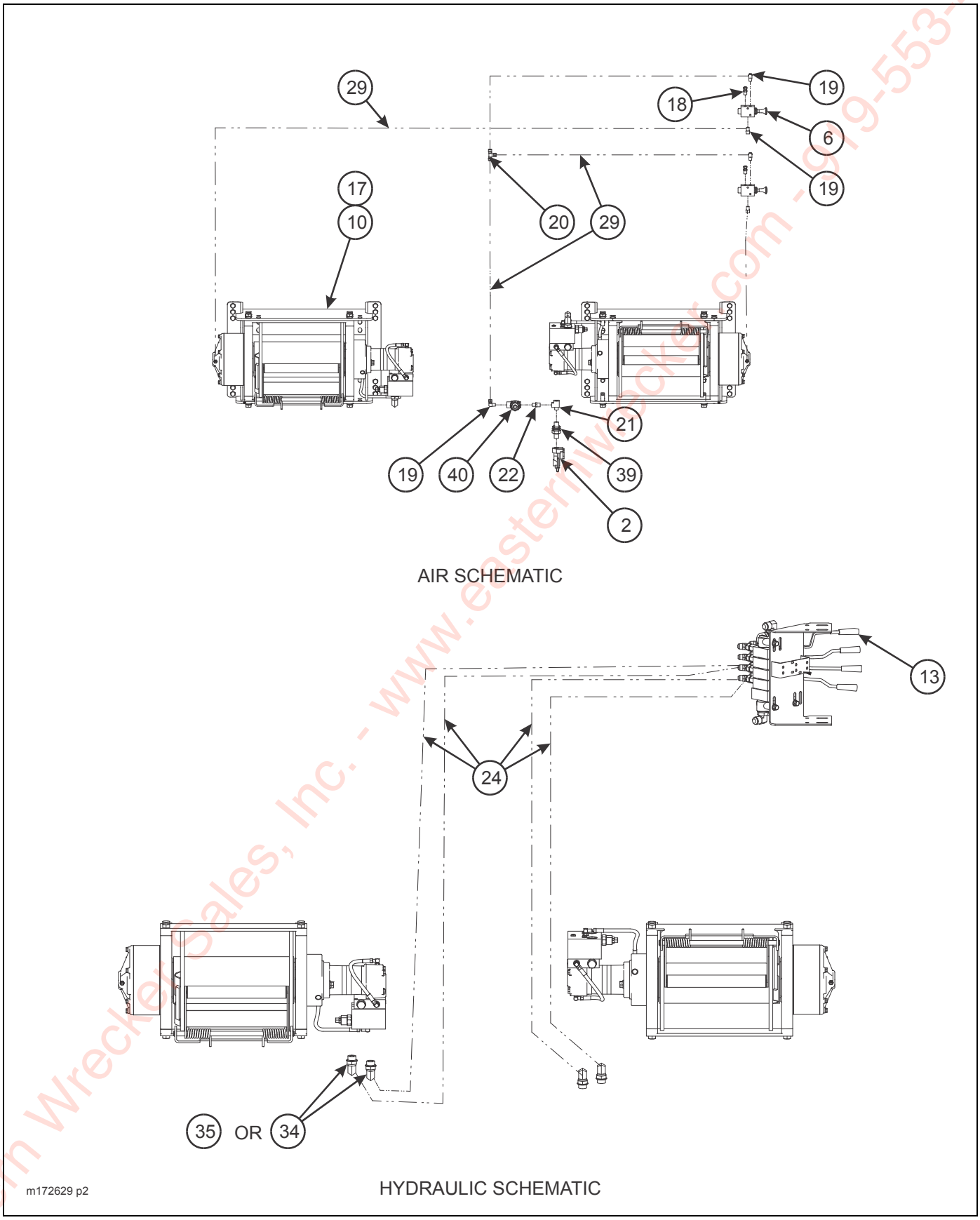

Figure 2-82: Dual Winch Installation, 30K (Warn) (2 of 3)

Eastern Wrecker Sales, Inc. - www.easternwrecker.com - 919-553-4038

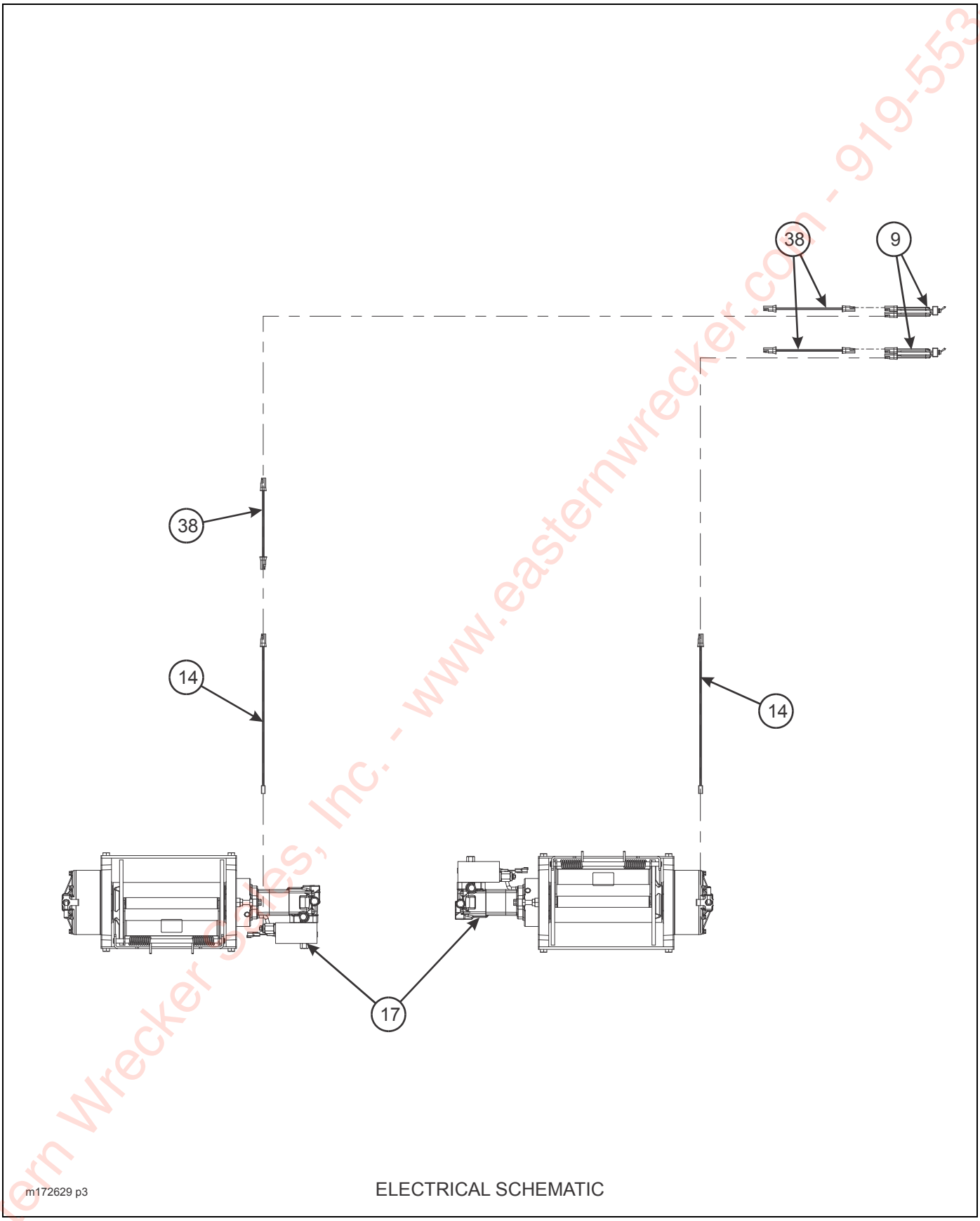

Figure 2-83: Dual Winch Installation, 30K (Warn) (3 of 3)

Eastern Wrecker Sales, Inc. - www.easternwrecker.com - 919-553-4038

DUAL WINCH INSTALLATION, 30K (WARN)

ITEM	PART NO.	DESCRIPTION	QTY.	
	161784	WINCH INSTALLATION, DUAL 30K WARN		
	172628	WINCH INSTALLATION, DUAL 30K WARN 2 SPEED		
1	81264	RUBBER BOOT FOR ELECT SWITCH	--	2
2	108801	GLAD HAND, RED AIR	REF	REF
3	109740	SCREW, HEX HEAD CAP 5/8-11 X 1-3/4 GR8	32	32
4	132773	SCREW, HEX HEAD CAP 1/2-13 X 2 GR8	24	24
5	132833	CABLE ASSEMBLY, 5/8 X 85 FLEX-X9	REF	REF
6	134657	VALVE, AIR 3 WAY/2 POS	2	2
7	137987	MOUNT, ELECTRICAL SWITCH	--	1
8	139254	NUTSERT, 3/8-16	4	4
9	150117	TOGGLE SWITCH SEALED SPST	--	2
10	155410	WINCH, 30K WARN AIR KO (SEE PAGE 2-151)	2	--
11	161785	MOUNT WELDMENT, WINCH WARN 20K/30K	2	2
12	-----	FRAME ASSEMBLY, GOOSENECK	REF	REF
13	-----	VALVE ASSEMBLY, 4 SPOOL	REF	REF
14	164053	HARNESS, BRANCH WORK LIGHT 102”’	--	2
15	167978	COVER, UPPER DECK TWO WINCHES	--	1
16	174043	DECAL, WINCH HI/LO	--	2
17	174550	WINCH, 20K WARN AR KO (SEE PAGE 2-157)	--	2
18	1-297-010007-05	FITTING, AIR	2	2
19	1-297-010008-07	FITTING, AIR 90	5	5
20	1-297-010010-01	FITTING, AIR UNION TEE	1	1
21	1-297-010018-03	FITTING, BRASS PIPE TEE	REF	REF
22	1-297-010019-05	FITTING BRASS PIPE HEX	1	1
23	1-382-010035-06	HOOK, CLEVIS GRAB 5/8 GRD80	2	2
24	1-397-010302220	HOSE ASSEMBLY 1/2 X 220	4	4
25	1-512-010002-09	NUT, HEX LOCK 1/2-13 GRC	24	24
26	1-512-010005-03	NUT, HEX LOCK 5/16-18 GRB	--	2
27	1-654-010049-05	SCREW, HEX HEAD CAP 5/16-18 X 1 GR5	--	2
28	1-654-010051-07	SCREW, HEX HEAD CAP 3/8-16 X 1-1/2 GR5	4	4
29	1-833-010001	TUBING, NYLON 1/4 OD	AR	AR
30	1-861-010032-09	WASHER, FLAT 5/16W	--	2
31	1-861-010032-11	WASHER, FLAT 3/8W	4	4
32	1-861-010034-11	WASHER, SPLIT LOCK 3/8	4	4
33	1-861-010034-15	WASHER, SPLIT LOCK 5/8	32	32
34	202702-10-8S	ADAPTER	--	4
35	2062-12-8S	ADAPTER, 90	4	--
36	3-174-010059	CHAIN LINK CONNECTING 5/8	2	2
37	3-174-010039036	CHAIN, 1/2 X 36	2	2
38	3-368-010252	HARNESS ASSEMBLY, BULKHEAD LIGHT EXT	--	3
39	55B61	FRAME UNION	REF	REF
40	905-54-107	BRAKE PROTECTION VALVE	1	1
	167692	FILTER	1	1

Eastern Wrecker Sales, Inc. - www.easternwrecker.com - 919-553-4038

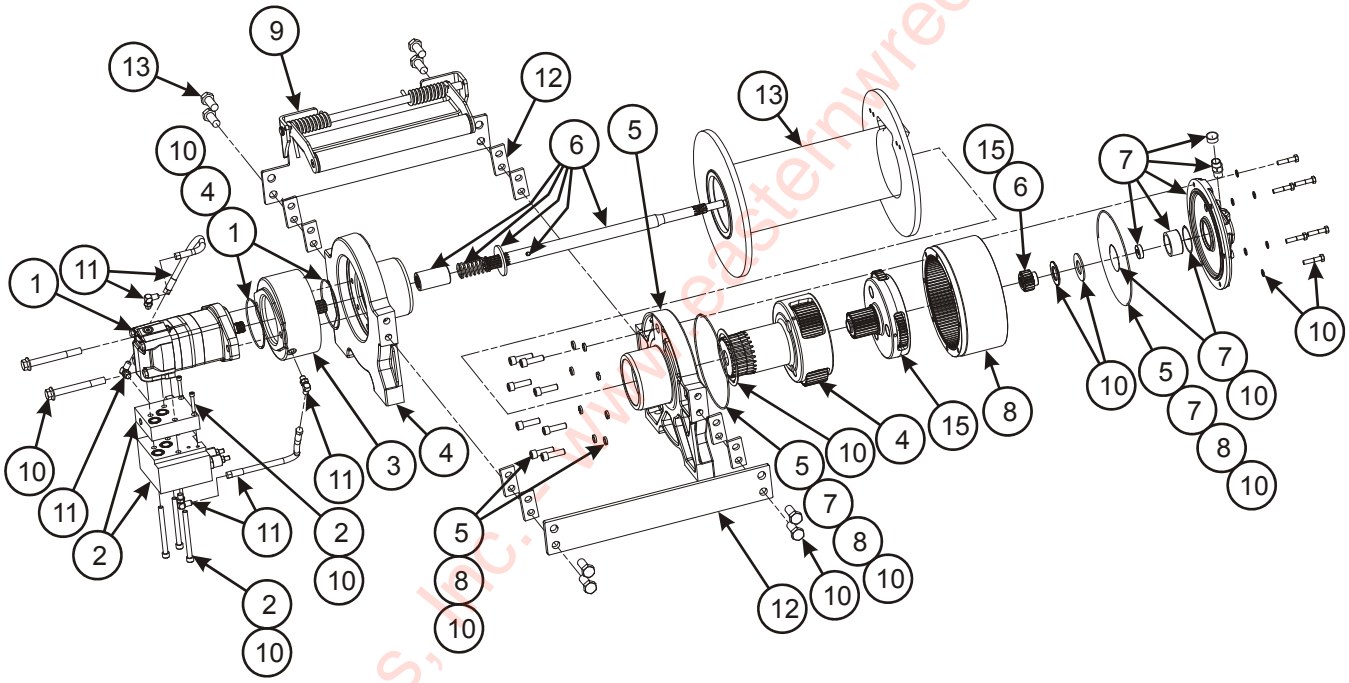

Figure 2-84: 30K Winch Items (Warn)

Eastern Wrecker Sales, INC. - www.easternwrecker.com - 919-553-4038

30K WINCH ITEMS (WARN)

ITEM	PART NO.	DESCRIPTION	QTY.
	155410	WINCH, 30K WARN AIR KICKOUT	
1	162940	SERVICE KIT - MOTOR HYDRAULIC 14.9CI	1
2	161590	SERVICE KIT - MANIFOLD HYDRAULIC	1
3	162207	SERVICE KIT - BRAKE ASSEMBLY	1
4	162209	SERVICE KIT - DRUM SUPPORT, MOTOR END	1
5	162210	SERVICE KIT - DRUM SUPPORT, GEAR END	1
6	162211	SERVICE KIT - DRIVE SHAFT, LONG	1
7	162941	SERVICE KIT - END HSG ASSY AIR	1
8	162215	SERVICE KIT - RING GEAR	1
9	162216	SERVICE KIT - TENSIONER LONG	1
10	162217	SERVICE KIT - HARDWARE SEAL	1
11	162218	SERVICE KIT - HOSE HYDRAULIC	1
12	162219	SERVICE KIT - TIE PLATE LONG	1
13	162942	SERVICE KIT - DRUM ASSEMBLY 30K LONG	1
14	162943	SERVICE KIT - CARRIER, STAGE 2 6.0-6.0	1
15	162944	SERVICE KIT - CARRIER, STAGE 1 6.0-6.0	1
16	162945	WIRE ROPE ASSEMBLY 5/8 EIPS X 245 FT (NOT SHOWN)	1

Eastern Wrecker Sales, Inc. - www.easternwrecker.com - 919-553-4038

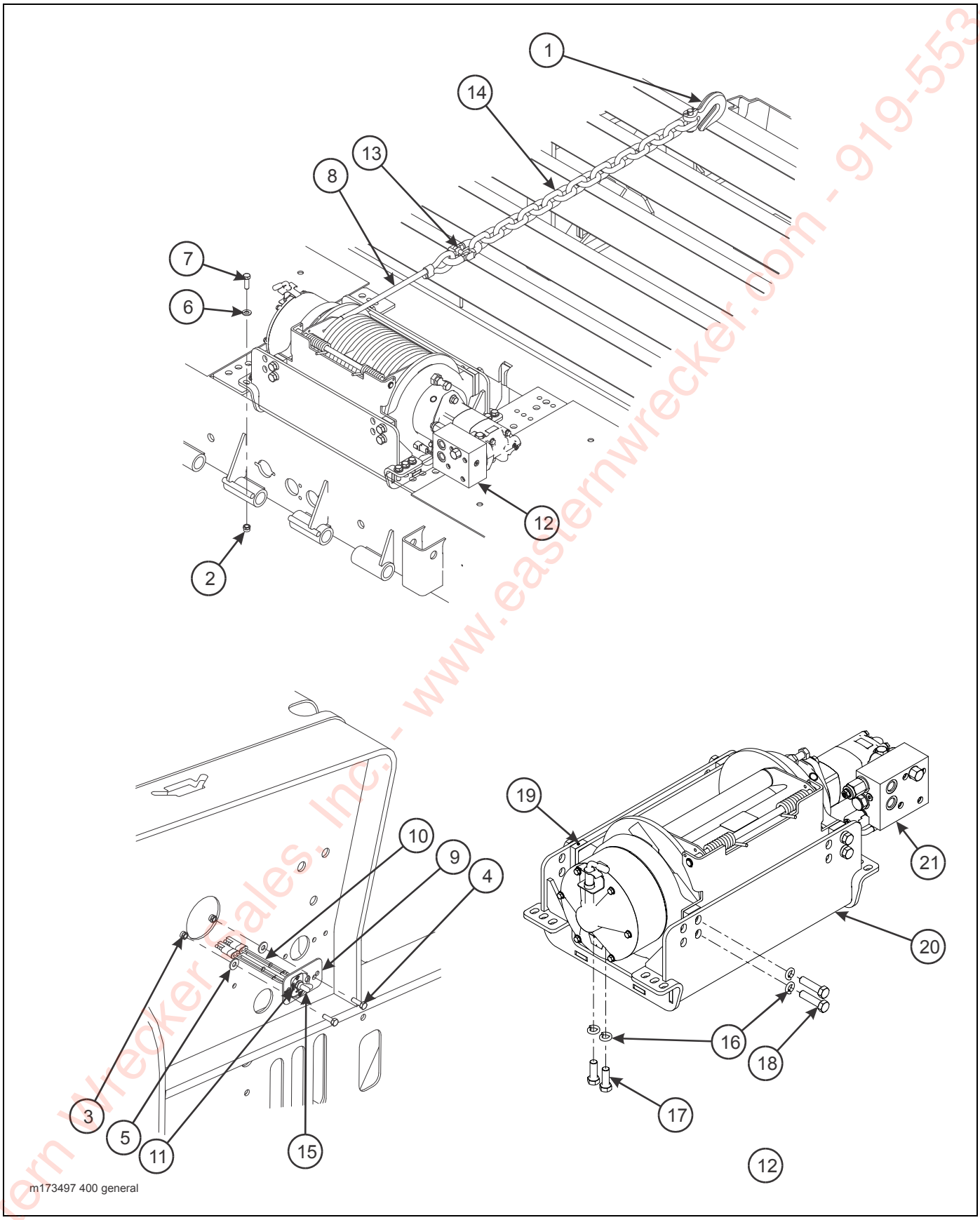

Figure 2-85: 30K 2 Speed Winch Installation, General Items (Warn)

Eastern Wrecker Sales, Inc. - www.easternwrecker.com - 919-553-4038

30K 2 SPEED WINCH INSTALLATION, GENERAL ITEMS (WARN)

ITEM	PART NO.	DESCRIPTION	QTY.		
	172878	WINCH INSTALLATION, 30K WARN 2 SPEED STD	*		
	173498	WINCH INSTALLATION, 30K WARN 2 SPEED HD		*	
	173499	WINCH INSTALLATION, 30K WARN 2 SPEED ARCTIC			*
1	1-382-010035-06	HOOK, CLEVIS GRAB 5/8 GRD80	1	1	1
2	1-512-010002-09	NUT, HEX LOCK 1/2-13 GRC	12	12	12
3	1-512-010005-03	NUT, HEX LOCK 5/16-18 GRB	2	2	2
4	1-654-010049-05	SCREW, HEX HEAD CAP 5/16-18 X 1 GR5	2	2	2
5	1-861-010032-09	WASHER, FLAT 5/16W	2	2	2
6	1-861-010032-14	WASHER, FLAT 1/2	12	12	12
7	108439	SCREW, HEX HEAD CAP 1/2-13 X 1-1/2 GR8	12	12	12
8	132833	CABLE ASSEMBLY, 5/8 X 85 FLEX-X9	REF	REF	REF
9	137987	MOUNT, ELECTRICAL SWITCH	1	1	1
10	150117	TOGGLE SWITCH SEALED SPST	REF	REF	REF
11	174043	DECAL, WINCH HI/LO	1	1	1
12	174552	WINCH ASSEMBLY, WARN 30K 2 SPEED (INCL. ITEMS 16 - 21)	1	1	1
13	3-174-010059	CHAIN LINK CONNECTING 5/8	1	1	1
14	3-174-010039036	CHAIN, 1/2 X 36	1	1	1
15	81264	RUBBER BOOT FOR ELECT SWITCH	REF	REF	REF
16	1-861-010034-15	WASHER, SPLIT LOCK 5/8	16	16	16
17	109740	SCREW, HEX HEAD CAP 5/8-11 X 1-3/4 GR8	8	8	8
18	113299	SCREW, HEX HEAD CAP 5/8-11 X 2-1/2 GR8	8	8	8
19	154234	SPACER, WINCH	4	4	4
20	165429	MOUNT WELDMENT, WINCH WARN	1	1	1
21	174550	WINCH, 20K WARN AR KO (SEE PAGE 2-157)	1	1	1

Eastern Wrecker Sales, Inc. - www.easternwrecker.com - 919-553-4038

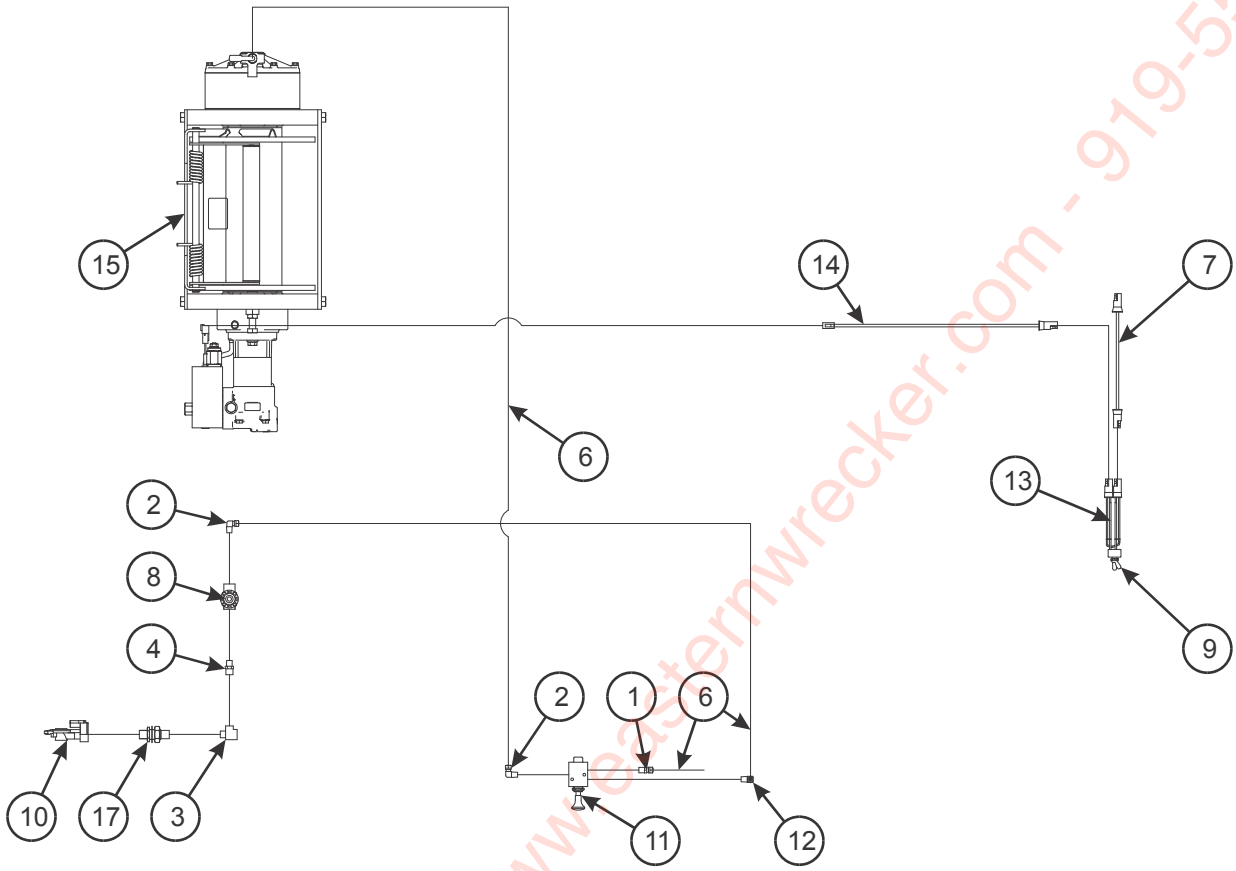

AIR SCHEMATIC

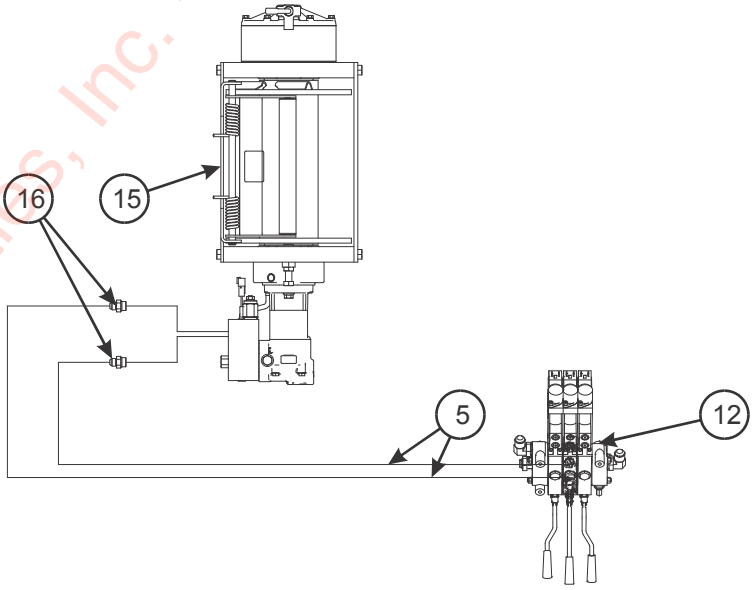

m173497 hydraulic air

HYDRAULIC SCHEMATIC

Figure 2-86: 30K Winch Installation, Hydraulic/Air/Electrical Items (Warn)

Eastern Wrecker Sales, Inc. - www.easternwrecker.com - 919-553-4038

30K 2 SPEED WINCH INSTALLATION, HYDRAULIC/AIR/ELECTRICAL ITEMS (WARN)

ITEM	PART NO.	DESCRIPTION	QTY.		
	172878	WINCH INSTALLATION, 30K WARN 2 SPEED STD	*		
	173498	WINCH INSTALLATION, 30K WARN 2 SPEED HD		*	
	173499	WINCH INSTALLATION, 30K WARN 2 SPEED ARCTIC			*
1	1-297-010007-05	FITTING, AIR	1	1	--
	126862	FITTING, COMPR STRAIGHT	--	--	1
2	1-297-010008-07	FITTING, AIR 90	3	3	--
	126677	FITTING, AIR 90	--	--	3
3	1-297-010018-03	FITTING, BRS PIPE ST TEE	REF	REF	REF
4	1-297-010019-05	FITTING, BRS PIPE HEX	1	1	1
5	174188	HOSE ASSEMBLY 1/2 X 182	2	--	--
	1-397-010302220	HOSE ASSEMBLY 1/2 X 220	--	2	--
	139928	HOSE, 1/2 X 172 ARCTIC	--	--	2
6	1-833-010001	TUBING, NYLON 1/4 OD	AR	AR	--
	126629	TUBING, NYLON 1/4 OD ARCTIC	--	--	AR
7	3-368-010252	HARNESS ASSEMBLY, BULKHEAD LIGHT EXT	1	1	1
8	905-54-107	BRAKE PROTECTION VALVE	1	1	1
	167692	FILTER	1	1	1
9	81264	RUBBER BOOT FOR ELECT SWITCH	1	1	1
10	108801	GLAD HAND, RED AIR	REF	REF	REF
11	134657	VALVE, AIR 3 WAY/2 POS	1	1	1
12	139525	VALVE ASSEMBLY, THREE SPOOL	REF	REF	REF
13	150117	TOGGLE SWITCH SEALED SPST	1	1	1
14	164053	HARNESS, BRANCH WORK LIGHT 102’”	1	1	1
15	174552	WINCH ASSEMBLY, WARN 30K 2 SPEED	REF	REF	REF
16	202702-10-8S	ADAPTER	2	2	2
17	55B61	FRAME UNION	REF	REF	REF

Eastern Wrecker Sales, Inc. www.easternwrecker.com - 919-553-4038

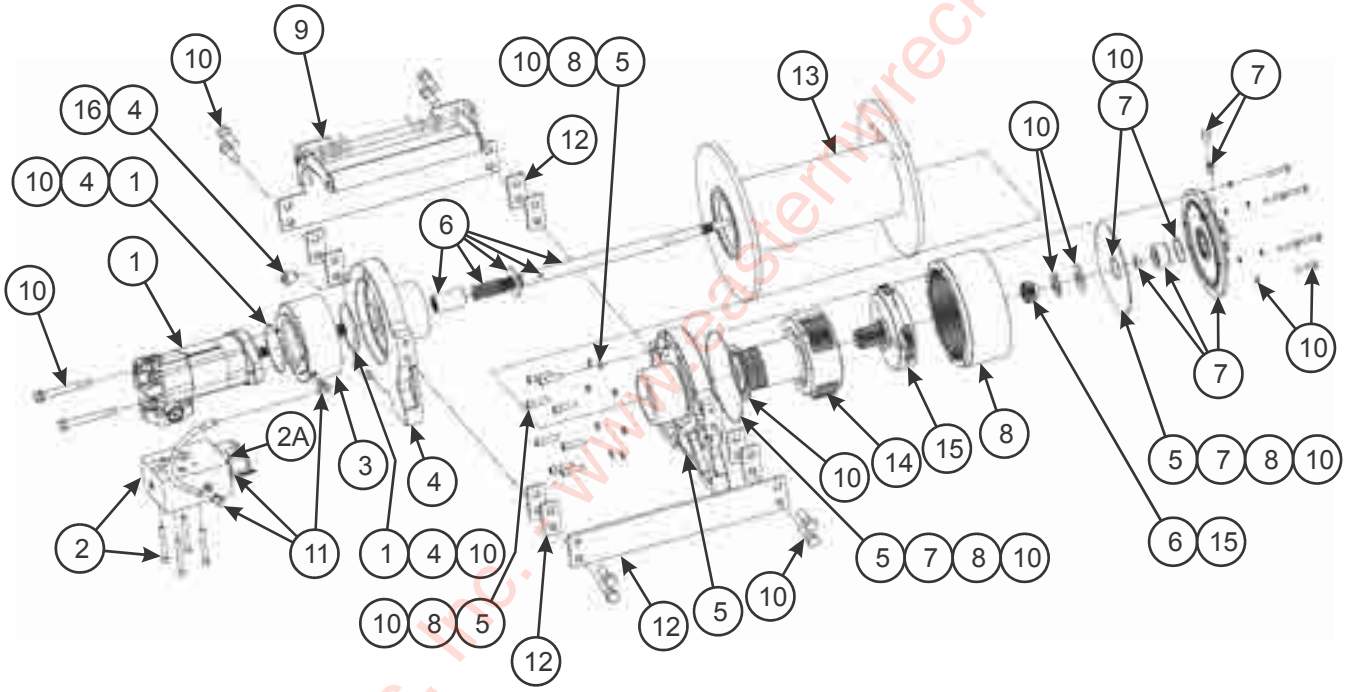

Figure 2-87: 30K Winch Installation, Hydraulic/Air Items (Warn)

Eastern Wrecker Sales, Inc. - www.easternwrecker.com - 919-553-4038

30K 2 SPEED WINCH ITEMS (WARN)

ITEM	PART NO.	DESCRIPTION	QTY.
	172877	WINCH, 30K WARN AIR KICKOUT	
1	178714	SERVICE KIT - MOTOR HYDRAULIC 14.9CI	1
2	178715	SERVICE KIT - MANIFOLD HYDRAULIC	1
2A	199104	SOLENOID FOR 2SP WARN, 20K-30K	1
3	162207	SERVICE KIT - BRAKE ASSEMBLY	1
4	178716	SERVICE KIT - DRUM SUPPORT, MOTOR END RETARDER	1
5	162210	SERVICE KIT - DRUM SUPPORT, GEAR END	1
6	162211	SERVICE KIT - DRIVE SHAFT, LONG	1
7	162941	SERVICE KIT - END HSG ASSY AIR	1
8	162215	SERVICE KIT - RING GEAR	1
9	162216	SERVICE KIT - TENSIONER LONG	1
10	162217	SERVICE KIT - HARDWARE SEAL	1
11	162218	SERVICE KIT - HOSE HYDRAULIC	1
12	162219	SERVICE KIT - TIE PLATE LONG	1
13	162942	SERVICE KIT - DRUM ASSEMBLY 30K LONG	1
14	162943	SERVICE KIT - CARRIER, STAGE 2 6.0-6.0	1
15	162944	SERVICE KIT - CARRIER, STAGE 1 6.0-6.0	1
16	178717	SERVICE KIT - EXPANSION PLUG 1” RUBBER	1
17	162945	WIRE ROPE ASSEMBLY 5/8 EIPS X 245 FT (NOT SHOWN)	1

Eastern Wrecker Sales, Inc. - www.easternwrecker.com - 919-553-4038

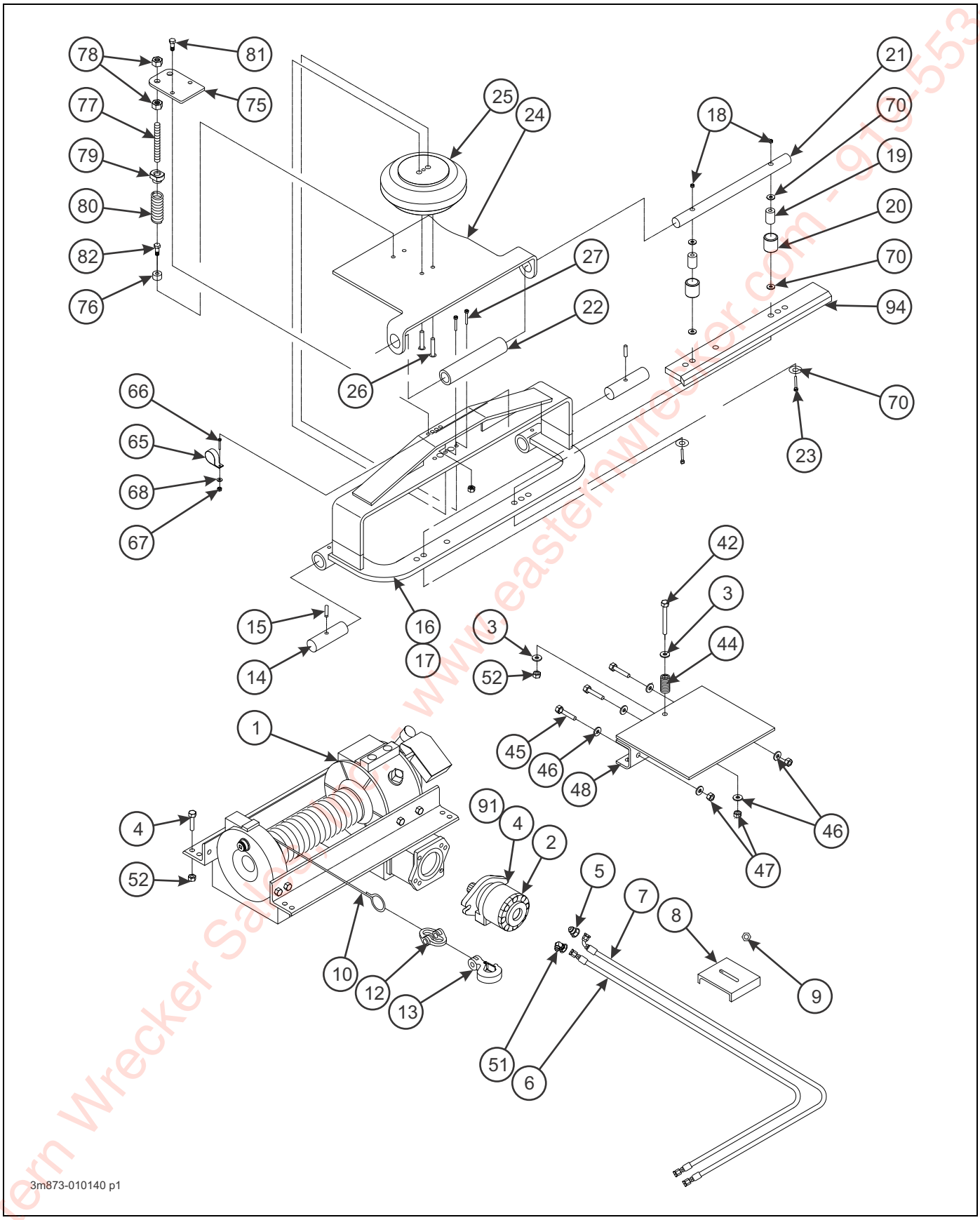

Figure 2-88: Winch Installation (1 of 2)

Eastern Wrecker Sales, Inc. www.easternwrecker.com - 919-553-4038

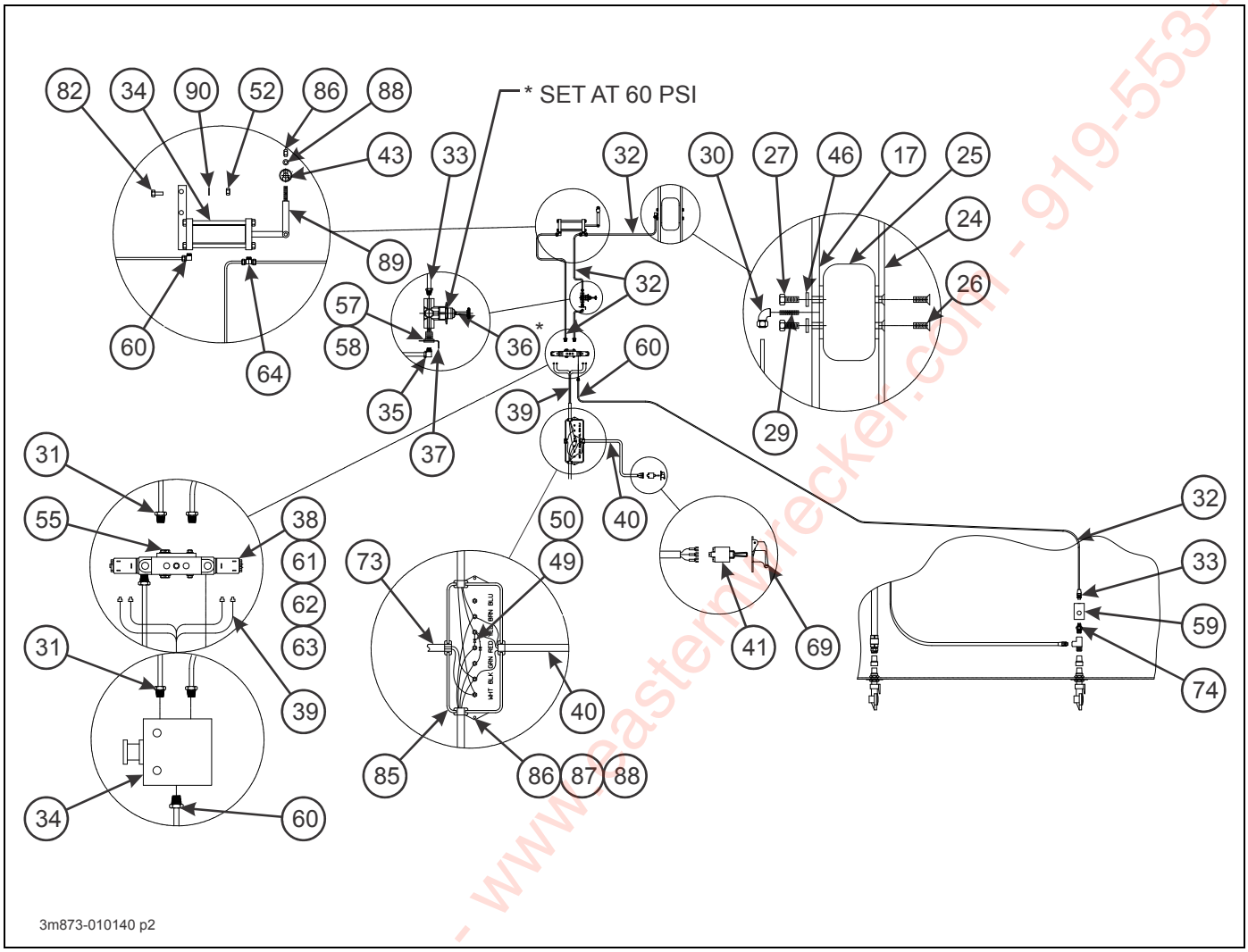

Figure 2-89: Winch Installation (2 of 2)

WINCH INSTALLATION (BRADEN)

ITEM	PART NO.	DESCRIPTION	QTY.
	3-873-010140	WINCH INSTALLATION 600-20K	REF
	3-873-010144	WINCH, INSTALLATION 600-12K	REF
	123210	WINCH, 20K GUIDE AIR TEN/REL	
	141618	WINCH, 20K SPGTEN CBL RLR DUAL	
	148284	WINCH, 20K AT AS ROLLER	
	148703	WINCH, 20K SPG TENS	
1	3-873-010123	WINCH ASSEMBLY 20K (SEE PAGE 2-176)	1
	3-873-010122	WINCH ASSEMBLY 12K (SEE PAGE 2-173)	1
2	3-481-010007	MOTOR, HYDRAULIC (20K) (SEE PAGE 2-181)	1
	3-481-010006	MOTOR, HYDRAULIC (12K) (SEE PAGE 2-181)	1
3	1-861-010032-15	WASHER, FLAT 1/2	2
4	1-654-010055-04	SCREW, HEX HEAD CAP 1/2-13 X 1-3/4 GR5	6
5	202702-10-8S	ADAPTER	1
6	1-397-010301170	HOSE ASSEMBLY	1
	1-397-010301194	HOSE ASSEMBLY	1
7	1-397-010302172	HOSE ASSEMBLY	1

Eastern Wrecker Sales, Inc. - www.easternwrecker.com - 919-553-4038

WINCH INSTALLATION (BRADEN)

ITEM	PART NO.	DESCRIPTION	QTY.
	1-397-010302192	HOSE ASSEMBLY	1
8	2-181-010001	HOSE CLAMP	4
9	1-510-010001	NUT, FLANGE LOCK 3/8-16	4
10	3-155-010017-4	CABLE (12K) 85’ W/ LOOP	1
	3-155-010018-6	CABLE (20K) 85’ W/ LOOP	1
11	3-174-010038	LINK	1
12	3-174-010039036	CHAIN (NOT SHOWN)	1
13	7HCGHT500	HOOK	1
14	119622	PIN, PIVOT WINCH ROLLER	**2
15	1-647-010004255	PIN, SPRING SLOTTED 2 X 3/8	**2
16	3-125-010464	BRACKET WLDMT WINCH ROLLER	**1,****1
17	3-125-010465	BRACKET WLDMT WINCH TENSIONER	*1,**1,***1
18	1-512-010005-13	NUT, HEX LOCK 5/8-11 GR8	**2
19	3-150-010196	BUSHING, ROD ROLLER-600	**2
20	3-831-010172	TUBE, ROLLER SIDE	**2
21	102188	ROD, PIVOTING GUIDE (20K)	**1
	3-642-010150	ROD, ROLLER TOP (12K)	**1
22	3-831-010182	TUBE, ROLLER TOP - 600 (20K)	**2
	3-831-010151	TUBE, ROLLER TOP (12K)	**1
23	1-654-010059-15	SCREW, HEX HEAD CAP 5/8-11 X 5 GR5	**2
	1-654-010059-16	SCREW, HEX HEAD CAP 5/8-11 X 5-1/2 GR5	**2
24	102187	WINCH TENSIONER PLATE (20K)	*1
25	3-720-010042	SPRING, AIR 6-1/2	*1
26	1-654-010141-04	SCREW, HEX SOC. HEAD CTSK 3/8-16 X 1 GR8	*2
27	1-654-010036-05	SCREW, HEX HEAD CAP 3/8-16 X 1 GR5	*2
29	1-297-010031-02	FITTING, BRASS PIPE 1/4 X 1-1/2	*1
30	1-297-010032-03	FITTING, AIR 90	*1
31	1-297-010007-04	CONNECTOR PIPE TO TUBE	***4
32	1-833-010001	NYLON TUBING 1/4 OD	***28FT
33	1-297-010007-05	FITTING, AIR	*2
34	107368	WINCH AIR SHIFT CYL (20K)(SEE PAGE 2-179)	***1
35	1-297-010008-07	FITTING, AIR 90	1
36	3-626-010004	REGULATOR, AIR PRESSURE	*1
37	3-120-010445	BRACKET, PRESSURE REGULATOR	*1
38	3-843-010022	VALVE, PNEUMATIC	***1
39	3-368-010129	HARNESS ASSEMBLY SINGLE REMOTE	***1
40	3-368-010187	HARNESS REMOTE SWITCH	***1
41	1-765-010065	SWITCH, TOGGLE	***1
42	1-654-010055-16	SCREW, HEX HEAD CAP 1/2-13 X 5-1/2 GR5	1
43	3-150-010186	BUSHING WINCH REMOTE LEVER (20K)	1
44	3-720-010010	SPRING COMP LEVEL WIND	1
45	1-654-010051-06	SCREW, HEX HEAD CAP 3/8-16 X 1-1/4 GR5	3
46	1-861-010032-10	WASHER, FLAT 3/8N	6
47	1-512-010005-05	NUT, HEX 3/8-16	3
48	102186	WINCH TENSIONER WLDMT (20K)	1
	3-873-010124	WINCH TENSIONER WLDMT (12K)	1
49	2-272-010109	ZENOR DIODE (20K)	2
50	1-879-010010	WIRE, WHITE (NOT SHOWN)	AR
51	2062-10-8S	ADAPTER, 90	****1

Eastern Wrecker Sales, Inc. www.easternwrecker.com - 919-553-4038

WINCH INSTALLATION (BRADEN)

ITEM	PART NO.	DESCRIPTION	QTY.
52	1-512-010005-09	NUT, HEX LOCK 1/2-13 GRB	19
53	119621	ANCHOR CABLE GUIDE WINCH (NOT SHOWN)	2
55	3-136-010001-01	BREATHER, PNEUMATIC EXHAUST	*2
57	1-297-010022-02	FITTING, AIR ANCHOR	1
58	1-297-010020-02	FITTING, BRASS PIPE	1
59	905-54-107	VALVE AND FILTER PRESSURE	*1,2
	167692	FILTER	*1,2
60	1-297-010008-05	FITTING, AIR 90	*3
61	1-654-010024014	SCREW, MACH SLOT 6-32 X 1-1/2	*3
62	1-861-010032-01	WASHER, FLAT #6	*3
63	1-512-010003-02	NUT, HEX LOCK 6-32	*1
64	1-297-010015-02	FITTING, AIR BRANCH TEE (20K)	REF
65	125892	SUPPORT CLAMP	*1
66	1-654-010024055	SCREW, MACH. #10-24 X 1-1/4	*1
67	1-512-010004-03	NUT, HEX LOCK #10-24	*1
68	1-861-010034-07	WASHER, SPLIT LOCK #10	1
69	3-348-010048	GUARD SWITCH -3 POSITION	1
70	1-861-010032-18	WASHER, FLAT 5/8N (20K)	**2
73	3-368-010188	HARNESS POWER JUMPER 660	1
74	1-297-010019-05	FITTING BRS PIPE HEX 3/8 X 1/4	1
75	3-565-011688	PLATE F/W SPRING TENSION - 600	*1
76	3-014-010255	ANCHOR BUSHING F/W SPRING TENSION - 600	*2
77	RTR7999X4ZP	ROD THREADED	*2
78	1-512-010007-12	NUT, HEX 3/4-10 GRB	*4
79	3-522-010017	NUT F/W SPRING TENSION - 600	*2
80	3-720-010035	SPRING	*2
81	1-654-010055-03	SCREW, HEX HEAD CAP 1/2-13 X 1-1/2 GR5	*2
82	1-654-010055-01	SCREW, HEX HEAD CAP 1/2-13 X 1 GR5	**2, ***3
83	100600	DECAL, WARNING WINCH (NOT SHOWN)	1
85	750-029	JUNCTION BOX 7-STUD	1
86	1-512-010007-05	NUT, HEX 1/4-20 GRB	2,***3
87	1-861-010032-06	WASHER, FLAT 1/4N	2
88	1-861-010034-09	WASHER, SPLIT LOCK 1/4	2,***3
89	107369	LEVER WINCH FREE SPOOL	***1
90	1-861-010032-14	WASHER, FLAT 1/2	***2
91	1-861-010034-13	WASHER, SPLIT LOCK 1/2	2
92	2033-8-8S	ADAPTER, TEE (NOT SHOWN)	2
93	3-873-010178-3	WINCH TENSIONER ASSEMBLY 20K (INCL 3, 42, 44-48, 52)	
	3-873-010178-1	WINCH TENSIONER ASSEMBLY 12K (INCL 3, 42, 44-48, 52)	
94	143246	RUB BAR, CABLE GUIDE WINCH	1

NOTES:
* - FOR AIR TENSION OPTION
**- FOR CABLE ROLLER OPTION (P/N F-100852 (12K) OR 136566 (20K))
***- FOR AIR SHIFT OPTION. (AVAILABLE ONLY ON 20K WINCH.)
****- FOR SPRING TENSION OPTION

Eastern Wrecker Sales Inc. www.easternwrecker.com - 919-553-4038

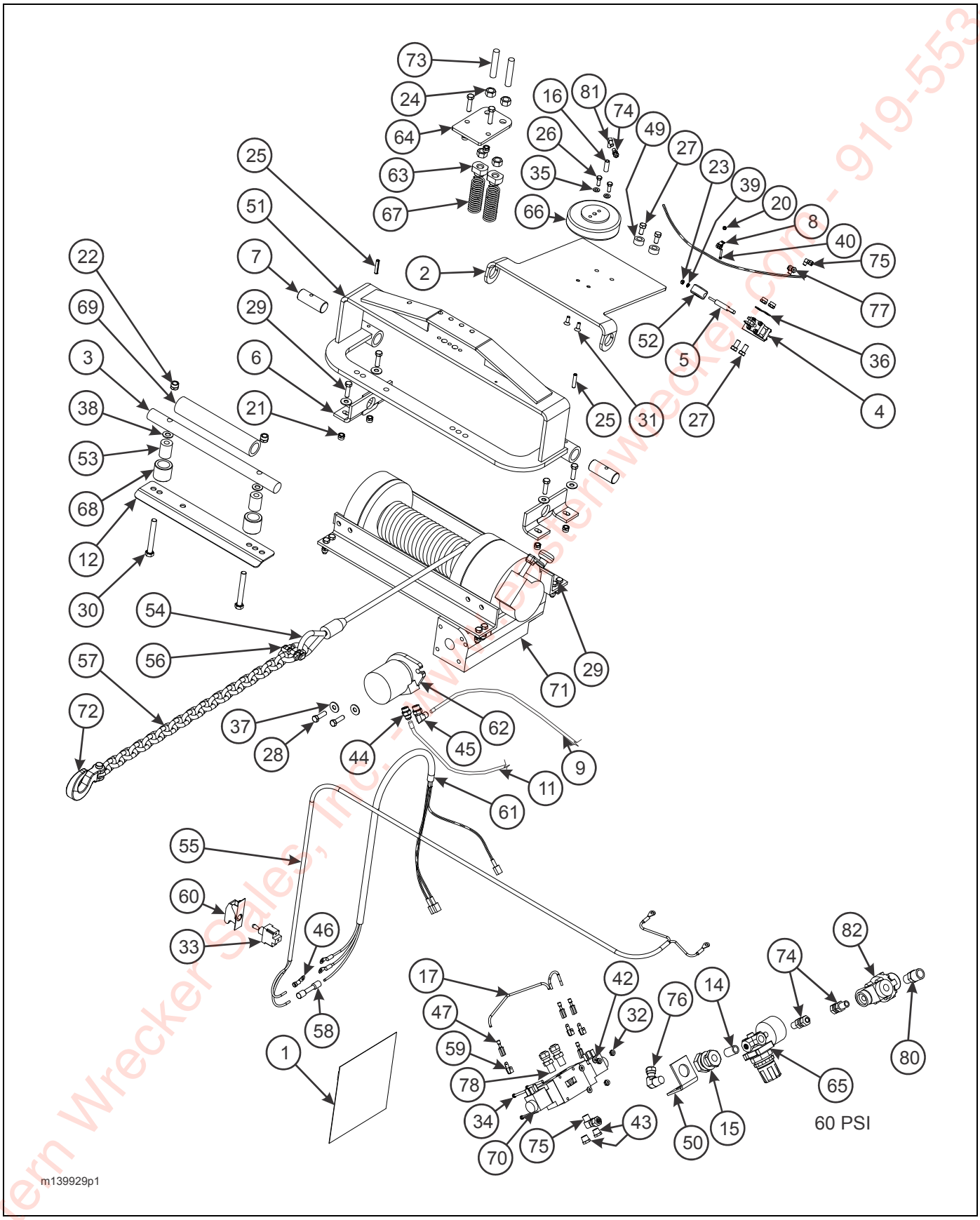

Figure 2-90: Winch Installation (1 of 2)

Eastern Wrecker Sales, Inc. - www.easternwrecker.com - 919-553-4038

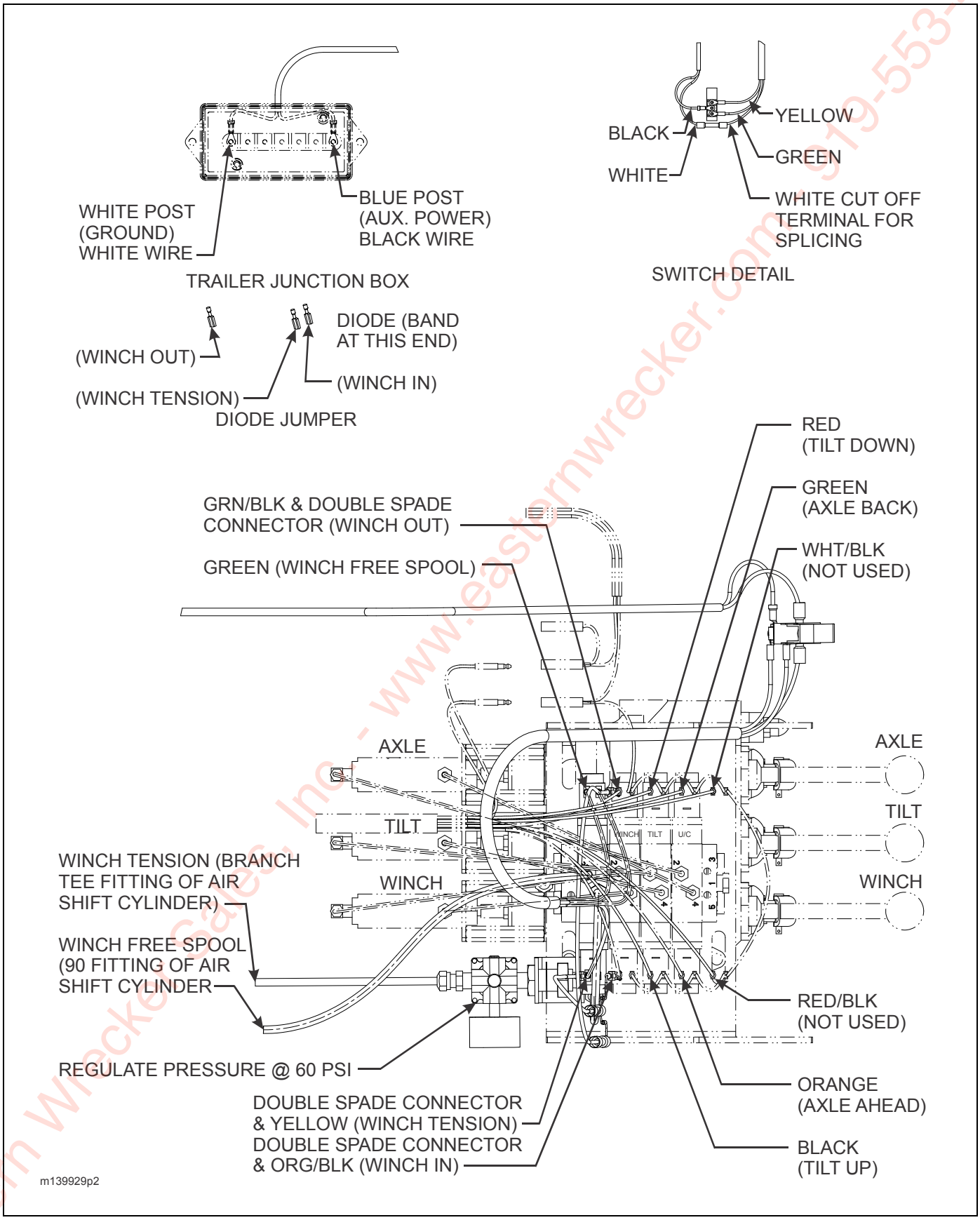

Figure 2-91: Winch Installation (2 of 2)

Eastern Wrecker Sales, Inc. - www.easternwrecker.com - 919-553-4038

WINCH INSTALLATION (BRADEN)

ITEM	PART NO.	DESCRIPTION	QTY.
	139929	WINCH 20K AT, A, ARCTIC W/ ORMT	
1	100600	DECAL, WARNING WINCH	1
2	102187	WINCH TENSIONER PLATE	1
3	102188	ROD, PIVOTING GUIDE	1
4	107368	WINCH AIR SHIFT CYL (SEE PAGE 2-179)	1
5	107369	LEVER WINCH FREE SPOOL	1
6	119621	ANCHOR CABLE GUIDE WINCH	2
7	119622	PIN, PIVOT WINCH ROLLER	2
8	125892	CLAMP, CABLE 3/8	1
9	139927	HOSE, 1/2 X 170 ARCTIC	1
10	126629	TUBING, NYLON 1/4 (NOT SHOWN)	AR
11	139928	HOSE, 1/2 X 172 ARCTIC	1
12	143246	RUB BAR CABLE GUIDE WINCH	1
14	1-297-010020-02	FITTING, BRASS PIPE	1
15	1-297-010022-02	FITTING, AIR ANCHOR	1
16	1-297-010031-02	FITTING, BRASS PIPE 1/4 X 1-1/2	1
17	1-879-010010	WIRE, WHITE 14 AWG	AR
20	1-512-010004-03	NUT, HEX LOCK #10-24	1
21	1-512-010005-09	NUT, HEX LOCK 1/2-13 GRB	16
22	1-512-010005-13	NUT, HEX LOCK 5/8-11 GR8	2
23	1-512-010007-05	NUT, HEX 1/4-20 GRB	1
24	1-512-010007-12	NUT, HEX 3/4-10 GRB	4
25	1-647-010004255	PIN, SPRING SLOTTED 2 X 3/8	2
26	1-654-010036-05	SCREW, HEX HEAD CAP 3/8-16 X 1 GR5	2
27	1-654-010055-01	SCREW, HEX HEAD CAP 1/2-13 X 1 GR5	4
28	1-654-010055-04	SCREW, HEX HEAD CAP 1/2-13 X 1-3/4 GR5	14
29	1-654-010055-05	SCREW, HEX HEAD CAP 1/2-13 X 2 GR5	2
30	1-654-010059-15	SCREW, HEX HEAD CAP 5/8-11 X 5 GR5	2
31	1-654-010141-04	SCREW, HEX SOC. HEAD CTSK 3/8-16 X 1 GR8	2
32	1-512-010003-02	NUT, HEX LOCK 6-32	3
33	1-765-010065	SWITCH, TOGGLE	1
34	1-654-010024014	SCREW, MACH SLOT 6-32 X 1-1/2	3
35	1-861-010032-10	WASHER, FLAT 3/8N	2
36	1-861-010032-14	WASHER, FLAT 1/2N	2
37	1-861-010032-15	WASHER, FLAT 1/2W	6
38	1-861-010032-18	WASHER, FLAT 5/8N	2
39	1-861-010034-09	WASHER, SPLIT LOCK 1/4	1
40	1-654-010024055	SCREW, MACH SLOTTED FIL HEAD #10-24 X 1-1/4	1
42	1-861-010032-01	WASHER, FLAT #6	3
43	3-136-010001-01	BREATHER, PNEUMATIC EXHAUST	2
44	202702-10-8S	ADAPTER	1
45	2062-10-8S	ADAPTER, 90	1
46	239-3646-4	TERMINAL	3
47	239-3650-1	TERMINAL, FEMALE SLIP ON 14 AWG	4
49	3-014-010255	ANCHOR BUSHING F/W SPRING TENSION - 600	2
50	3-120-010445	BRACKET, PRESSURE REGULATOR	1
51	3-125-010465	BRACKET WLDMT WINCH TENSIONER	1
52	3-150-010186	BUSHING WINCH REMOTE LEVER (20K)	1

Eastern Wrecker Sales, Inc. - www.easternwrecker.com - 919-553-4038

WINCH INSTALLATION (BRADEN)

ITEM	PART NO.	DESCRIPTION	QTY.
53	3-150-010196	BUSHING, ROD ROLLER-600	2
54	3-155-010018-6	CABLE 85’ W/ LOOP	REF
55	3-156-010008	CABLE, 14-2 SO TWO CONDUCTOR	AR
56	3-174-010038	LINK	1
57	3-174-010039036	CHAIN	1
58	3-272-010021	ELECT BUTT SPLICE 16/14 W/ SEAL	3
59	3-272-010157	ELECT ADAPTER CHAIR 1/4 PUSH-ON	3
60	3-348-010048	GUARD SWITCH -3 POSITION	1
61	3-368-010129	HARNESS ASSEMBLY SINGLE REMOTE	1
62	3-481-010007	MOTOR, HYDRAULIC (20K) (SEE PAGE 2-181)	1
63	3-522-010017	NUT F/W SPRING TENSION - 600	2
64	3-565-011688	PLATE F/W SPRING TENSION - 600	1
65	3-626-010004	REGULATOR, AIR PRESSURE	1
66	3-720-010042	SPRING, AIR 6-1/2	1
67	3-720-010035	SPRING	2
68	3-831-010172	TUBE, ROLLER SIDE	2
69	3-831-010182	TUBE, ROLLER TOP - 600 (20K)	1
70	3-843-010022	VALVE, PNEUMATIC	1
71	3-873-010123	WINCH ASSEMBLY 20K (SEE PAGE 2-176)	1
72	7HCGHT500	HOOK	1
73	RTR7999X4ZP	ROD THREADED	2
74	126672	FITTING, COMPRESS, STRAIGHT	3
75	126676	FITTING, AIR 90	2
76	126677	FITTING, AIR 90	1
77	126679	FITTING, COMPRESSION TEE	1
78	126791	FITTING, COMPRESS	2
80	1-297-010019-05	FITTING BRS PIPE HEX 3/8 X 1/4	1
81	118-2676-2	ELBOW 90	1
82	905-54-107	VALVE AND FILTER PRESSURE	1
	167692	FILTER	1

Eastern Wrecker Sales, Inc. www.easternwrecker.com - 919-553-4038

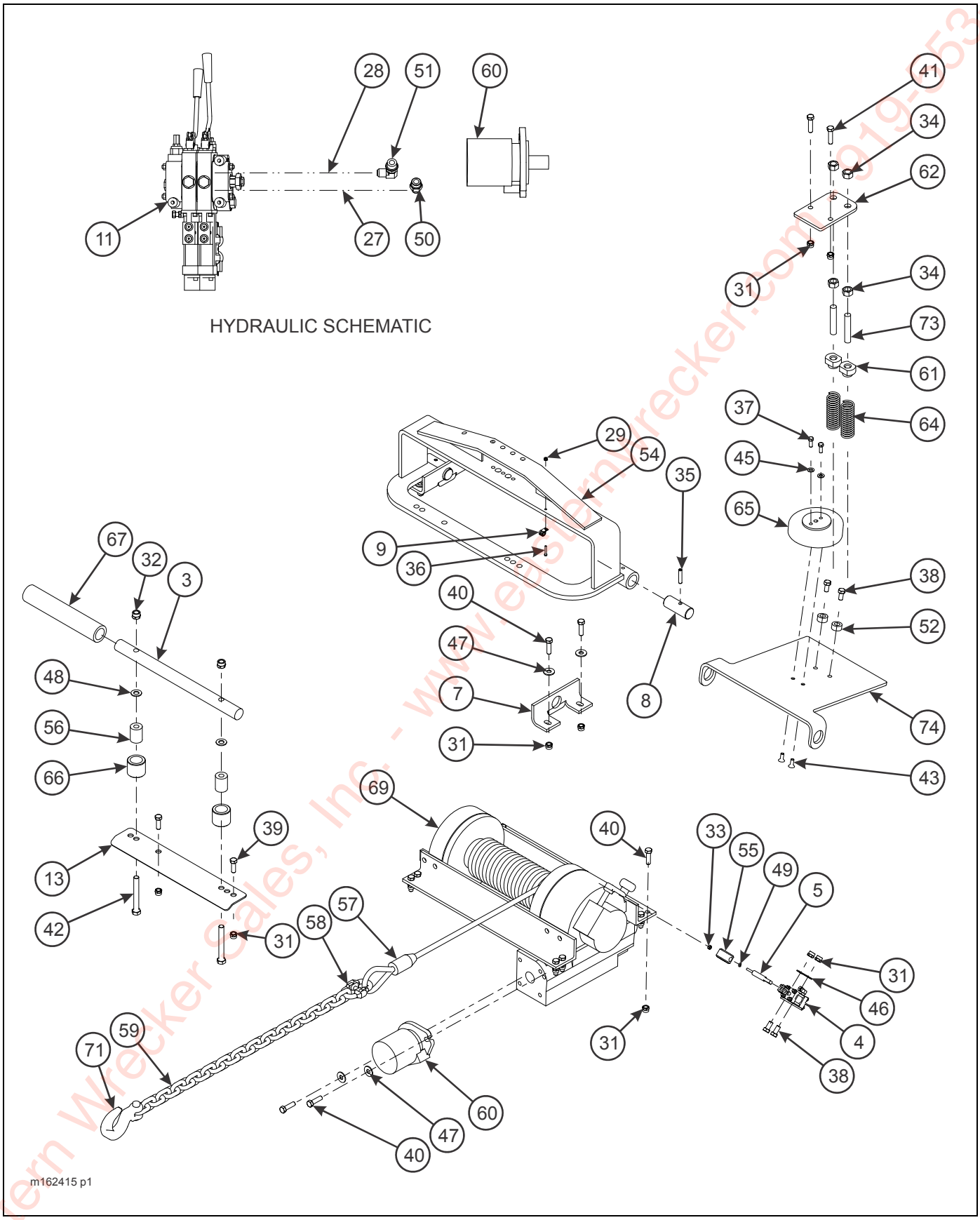

Figure 2-92: 20K Air Tension/Release Winch Installation (1 of 2)

Eastern Wrecker Sales, Inc. - www.easternwrecker.com - 919-553-4038

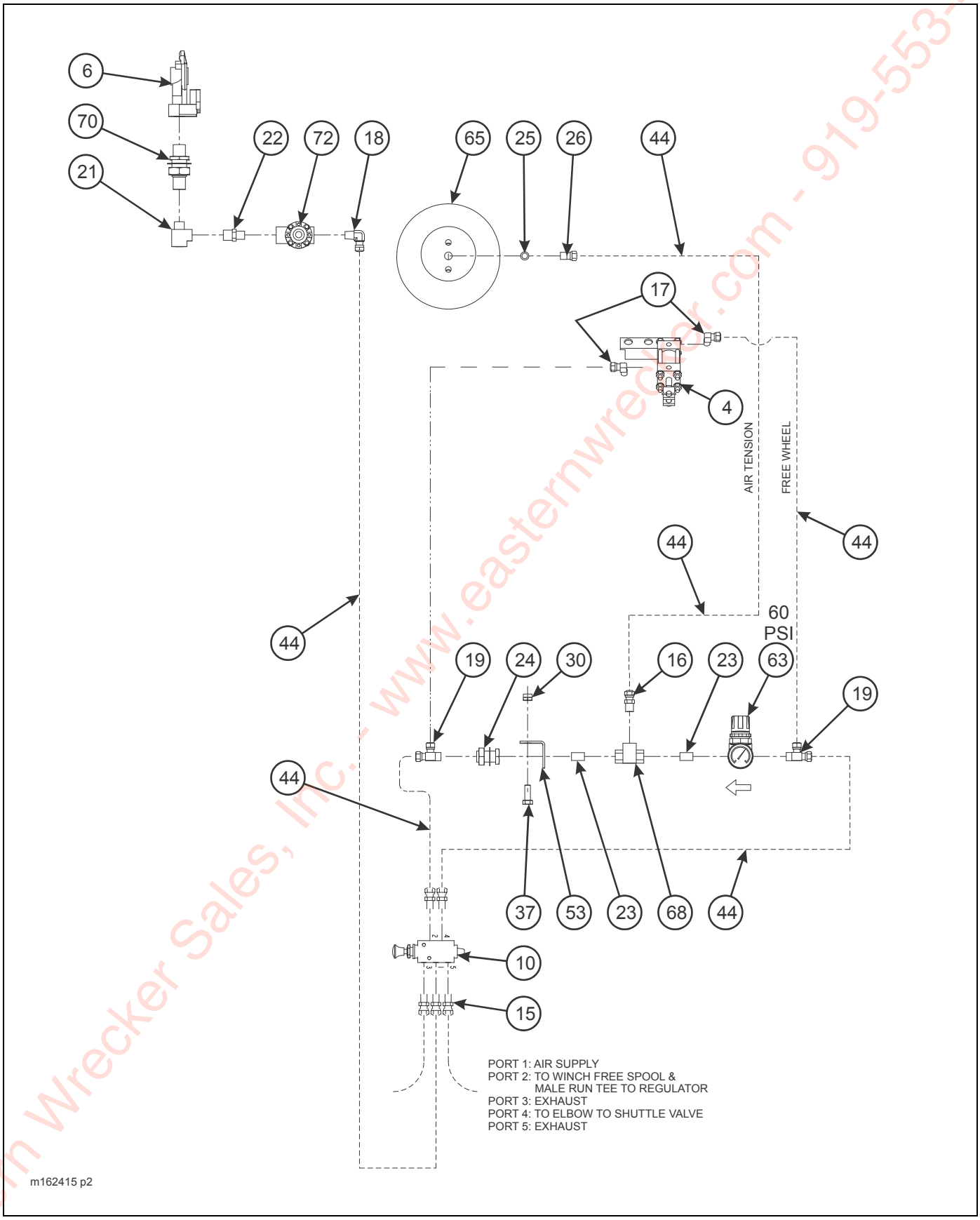

Figure 2-93: 20K Air Tension/Release Winch Installation (2 of 2)

Eastern Wrecker Sales, Inc. - www.easternwrecker.com - 919-553-4038

20K AIR TENSION/RELEASE WINCH INSTALLATION (BRADEN)

ITEM	PART NO.	DESCRIPTION	QTY.
	162415	WINCH INSTALLATION, 20K GUIDE AIR TENSION/RELEASE	
1	100600	DECAL, WARNING WINCH (NOT SHOWN)	1
2	100600	DECAL, WARNING WINCH (NOT SHOWN)	1
3	102188	ROD, PIVOTING GUIDE (20K)	**1
4	107368	WINCH AIR SHIFT CYL (20K)(SEE PAGE 2-179)	***1
5	107369	LEVER WINCH FREE SPOOL	***1
6	108801	GLAD HAND, RED AIR	REF
7	119621	ANCHOR CABLE GUIDE WINCH	2
8	119622	PIN, PIVOT WINCH ROLLER	**2
9	125892	SUPPORT CLAMP	*1
10	139552	VALVE, AIR 5 WAY/S POSITION	1
11	140802	VALVE ASSEMBLY	REF
12	-----	FRAME WELDMENT	REF
13	143246	RUB BAR, CABLE GUIDE WINCH	1
15	1-297-010007-04	CONNECTOR PIPE TO TUBE	***4
16	1-297-010007-05	FITTING, AIR	*2
17	1-297-010008-05	FITTING, AIR 90	2
18	1-297-010008-07	FITTING, AIR 90	1
19	1-297-010011-02	FITTING, AIR M/RUN TEE	1
20	1-297-010015-03	FITTING, AIR BRANCH TEE	REF
21	1-297-010018-03	FITTING, BRS PIPE STR TEE	1
22	1-297-010019-05	FITTING BRS PIPE HEX 3/8 X 1/4	1
23	1-297-010020-02	FITTING, BRASS PIPE	1
24	1-297-010022-02	FITTING, AIR ANCHOR	1
25	1-297-010031-02	FITTING, BRASS PIPE 1/4 X 1-1/2	*1
26	1-297-010032-03	FITTING, AIR 90	*1
27	1-397-010301170	HOSE ASSEMBLY 1/2 X 170	1
28	1-397-010302172	HOSE ASSEMBLY 1/2 X 172	1
29	1-512-010004-03	NUT, HEX LOCK #10-24	*1
30	1-512-010005-05	NUT, HEX 3/8-16	3
31	1-512-010005-09	NUT, HEX LOCK 1/2-13 GRB	19
32	1-512-010005-13	NUT, HEX LOCK 5/8-11 GR8	**2
33	1-512-010007-05	NUT, HEX 1/4-20 GRB	2,***3
34	1-512-010007-12	NUT, HEX 3/4-10 GRB	*4
35	1-647-010004255	PIN, SPRING SLOTTED 2 X 3/8	**2
36	1-654-010024055	SCREW, MACH. #10-24 X 1-1/4	*1
37	1-654-010036-05	SCREW, HEX HEAD CAP 3/8-16 X 1 GR5	*2
38	1-654-010055-01	SCREW, HEX HEAD CAP 1/2-13 X 1 GR5	**2, ***3
39	1-654-010055-03	SCREW, HEX HEAD CAP 1/2-13 X 1-1/2 GR5	*2
40	1-654-010055-04	SCREW, HEX HEAD CAP 1/2-13 X 1-3/4 GR5	6
41	1-654-010055-05	SCREW, HEX HEAD CAP 1/2-13 X 2 GR5	2
42	1-654-010059-15	SCREW, HEX HEAD CAP 5/8-11 X 5 GR5	**2
43	1-654-010141-04	SCREW, HEX SOC. HEAD CTSK 3/8-16 X 1 GR8	*2
44	1-833-010001	NYLON TUBING 1/4 OD	***28FT
45	1-861-010032-10	WASHER, FLAT 3/8N	*2
46	1-861-010032-14	WASHER, FLAT 1/2	***2
47	1-861-010032-15	WASHER, FLAT 1/2	2

Eastern Wrecker Sales Inc. - www.easternwrecker.com - 919-553-4038

20K AIR TENSION/RELEASE WINCH INSTALLATION (BRADEN)

ITEM	PART NO.	DESCRIPTION	QTY.
48	1-861-010032-18	WASHER, FLAT 5/8N (20K)	**2
49	1-861-010034-09	WASHER, SPLIT LOCK 1/4	2,***3
50	202702-10-8S	ADAPTER	1
51	2062-10-8S	ADAPTER, 90	****1
52	3-014-010255	ANCHOR BUSHING F/W SPRING TENSION - 600	*2
53	3-120-010445	BRACKET, PRESSURE REGULATOR	*1
54	3-125-010465	BRACKET WLDMT WINCH TENSIONER	1
55	3-150-010186	BUSHING WINCH REMOTE LEVER (20K)	1
56	3-150-010196	BUSHING, ROD ROLLER-600	**2
57	3-155-010018-6	CABLE (20K) 85’ W/ LOOP	1
58	3-174-010038	LINK	1
59	3-174-010039036	CHAIN	1
60	3-481-010007	MOTOR, HYDRAULIC (20K) (SEE PAGE 2-181)	1
61	3-522-010017	NUT F/W SPRING TENSION - 600	*2
62	3-565-011688	PLATE F/W SPRING TENSION - 600	*1
63	3-626-010004	REGULATOR, AIR PRESSURE	*1
64	3-720-010035	SPRING	*2
65	3-720-010042	SPRING, AIR 6-1/2	*1
66	3-831-010172	TUBE, ROLLER SIDE	**2
67	3-831-010182	TUBE, ROLLER TOP - 600 (20K)	**2
68	3-843-010039-02	VALVE, AIR SHUTTLE	1
69	3-873-010123	WINCH ASSEMBLY 20K (SEE PAGE 2-176)	1
70	55B61	FRAME UNION	REF
71	7HCGHT500	HOOK	1
72	905-54-107	VALVE AND FILTER PRESSURE	*1,2
	167692	FILTER	1
73	RTR7999X4ZP	ROD THREADED	*2
74	102187	PLATE, WINCH TENSIONER 20K AIR	1

Eastern Wrecker Sales, Inc - www.easternwrecker.com - 919-553-4038

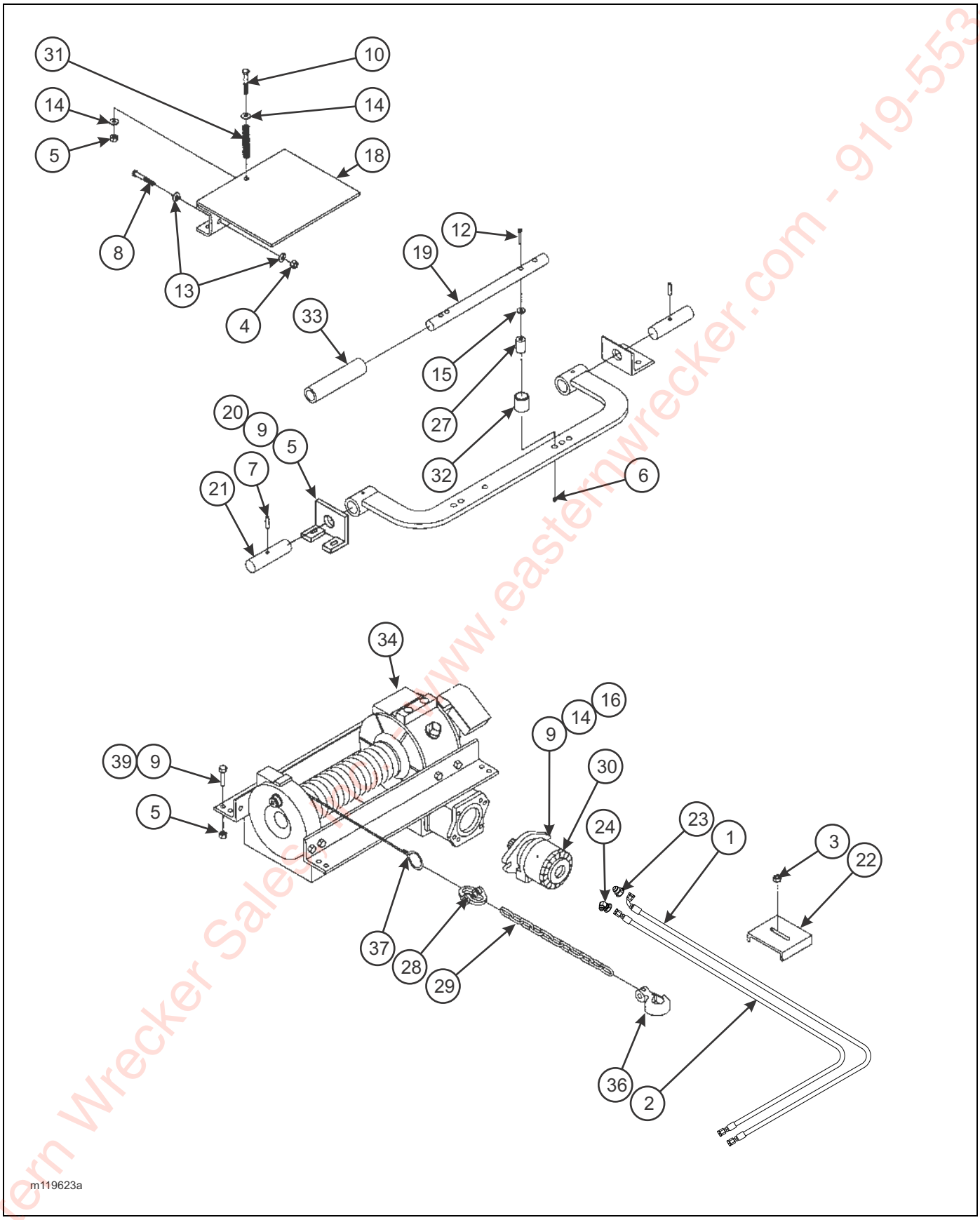

Figure 2-94: Winch Installation, Spring Tension Cable Roller

Eastern Wrecker Sales - www.easternwrecker.com - 919-553-4038

WINCH INSTALLATION, SPRING TENSION CABLE ROLLER

ITEM	PART NO.	DESCRIPTION	QTY.		
	119623	WINCH INSTALLATION12K SPRING TENSION CABLE ROLLER	*		
	119624	WINCH INSTALLATION 20K SPRING TENSION CABLE ROLLER		*	
	163357	WINCH INSTALLATION 20K SPRING TENSION ARCTIC			*
1	1-397-010301170	HOSE ASSEMBLY 1/2 X 170	1	1	--
	139927	HOSE ASSEMBLY 1/2 X 170 ARCTIC	--	--	1
2	1-397-010302172	HOSE ASSEMBLY 1/2 X 172	1	1	--
	139928	HOSE ASSEMBLY 1/2 X 172 ARCTIC	--	--	1
3	1-510-010001	NUT, FLANGE LOCK 3/8-16 (20K)	4	4	4
4	1-512-010005-05	NUT, HEX 3/8-16	3	3	3
5	1-512-010005-09	NUT, HEX LOCK 1/2-13 GRB	13	13	9
6	1-512-010005-13	NUT, HEX LOCK 5/8-11 GR8	2	2	--
7	1-647-010004255	PIN, SPRING SLOTTED 2 X 3/8	2	2	--
8	1-654-010051-06	SCREW, HEX HEAD CAP 3/8-16 X 1-1/4 GR5	3	3	3
9	1-654-010055-04	SCREW, HEX HEAD CAP 1/2-13 X 1-3/4 GR5	6	14	10
10	1-654-010055-16	SCREW, HEX HEAD CAP 1/2-13 X 5-1/2 GR5	1	1	1
12	1-654-010059-15	SCREW, HEX HEAD CAP 5/8-11 X 5 GR5	2	2	--
13	1-861-010032-10	WASHER, FLAT 3/8N	6	6	6
14	1-861-010032-15	WASHER, FLAT 1/2	2	2	2
15	1-861-010032-18	WASHER, FLAT 5/8N (20K)	6	6	--
16	1-861-010034-13	WASHER, SPLIT LOCK 1/2	2	2	2
17	100600	DECAL, WARNING WINCH (NOT SHOWN)	1	1	1
18	3-873-010124	WINCH TENSIONER WLDMT (12K)	1	--	--
	102186	WINCH TENSIONER WLDMT (20K)	--	1	1
19	3-642-010150	ROD, ROLLER TOP (12K)	1	--	--
	102188	ROD, PIVOTING GUIDE (20K)	--	1	--
20	119621	ANCHOR CABLE GUIDE WINCH	2	2	--
21	119622	PIN, PIVOT WINCH ROLLER	2	2	--
22	2-181-010001	HOSE CLAMP	4	4	4
23	202702-10-8S	ADAPTER	1	1	1
24	2062-10-8S	ADAPTER, 90	1	1	1
25	3-125-010464	BRACKET WLDMT WINCH ROLLER (NOT SHOWN)	1	1	--
27	3-150-010196	BUSHING, ROD ROLLER-600	2	2	--
28	3-174-010038	LINK	1	1	1
29	3-174-010039036	CHAIN	1	1	1
30	3-481-010006	MOTOR, HYDRAULIC (12K) (SEE PAGE 2-181)	1	--	--
	3-481-010007	MOTOR, HYDRAULIC (20K) (SEE PAGE 2-181)	--	1	1
31	3-720-010010	SPRING COMP LEVEL WIND	1	1	1
32	3-831-010172	TUBE, WINCH ROLLER SIDE	2	2	--
33	3-831-010151	TUBE, ROLLER TOP (12K)	1	1	--
	3-831-010182	TUBE, ROLLER TOP - 600 (20K)	1	1	--
34	3-873-010122	WINCH ASSEMBLY (12K) (SEE PAGE 2-173)	1	--	--
	3-873-010123	WINCH ASSEMBLY (20K) (SEE PAGE 2-176)	--	1	1
36	7HCGHT500	HOOK	1	1	1
37	3-155-010018-6	CABLE 85’ W/ LOOP	1	1	--
38	116378	SPACER, WINCH (12K) (NOT SHOWN)	8	--	--
39	1-654-010055-07	SCREW, HEX HEAD CAP 1/2-13 X 2-1/2 GR5 (12K)	8	--	--

Eastern Wrecker Sales, Inc. - www.easternwrecker.com - 919-556-4038

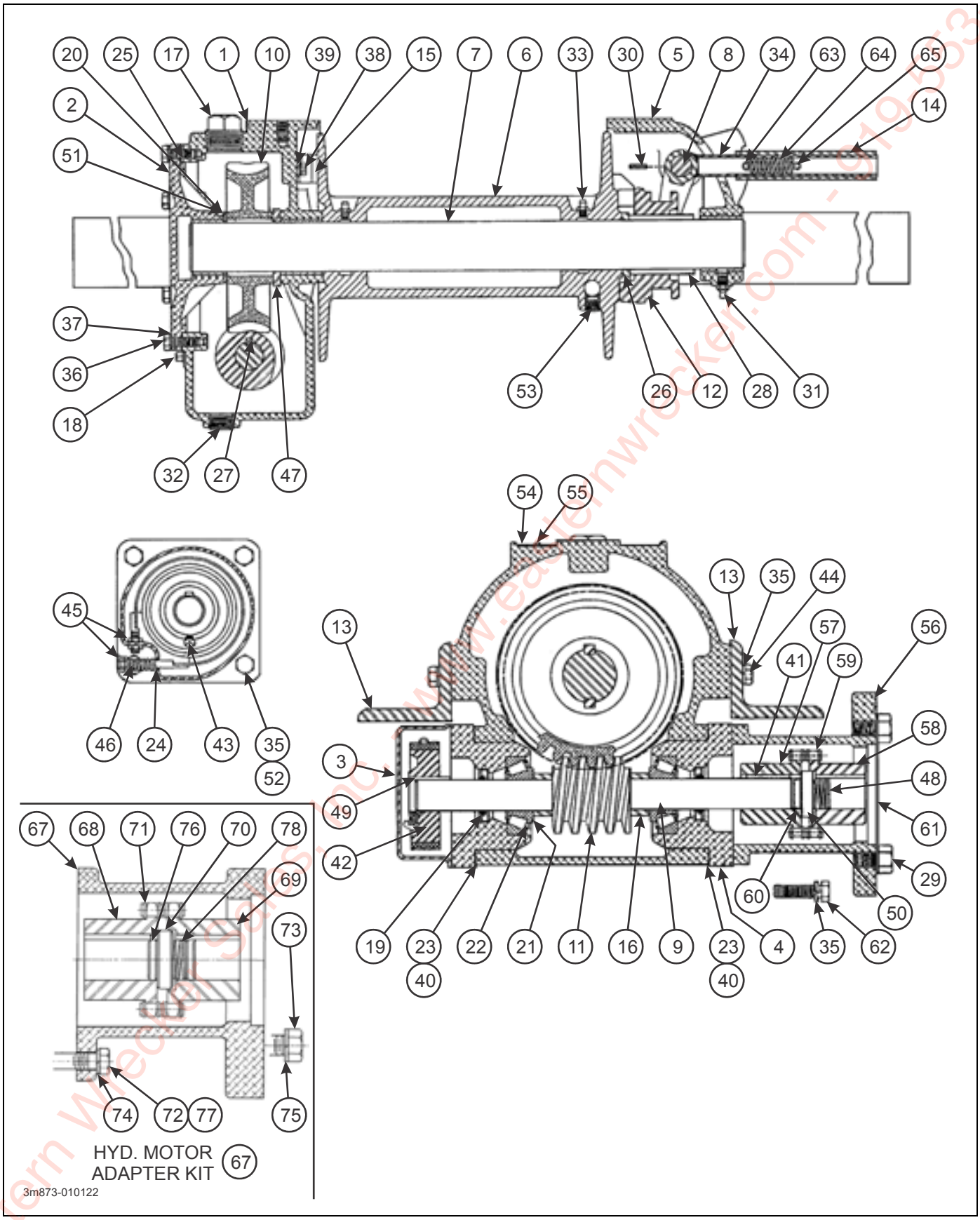

Figure 2-95: 12,000 Lb. Winch Items

Eastern Wrecker Sales, Inc. www.easternwrecker.com - 919-553-4038

12,000# WINCH ITEMS (BRADEN)

ITEM	PART NO.	REFERENCE NO.	DESCRIPTION	QTY.
	3-873-010122		WINCH ASSEMBLY 12K (BRADEN)	
1	81006	81006	WORM HOUSING ASSEMBLY	1
1A	18078	18078	BUSHING	1
2	81009	81009	COVER ASSEMBLY WORM HOUSING	1
2A	11368	11368	BUSHING	1
3	18032	18032	HOUSING SAFETY BRAKE	1
4	23303	23303	CONTAINER BEARING	2
5	81530	81530	LEG ASSEMBLY BEARING	1
6	11128	11128	DRUM CABLE	1
7	11129	11129	DRUM SHAFT CABLE	1
8	11130	11130	SHIFTER SHAFT	1
9	23470	23470	SHAFT WORM	1
10	11144	11144	GEAR WORM LEFT HAND	1
11	11142	11142	WORM LEFT HAND	1
12	18039	18039	SLIDING CLUTCH	1
13	22752	22752	ANGLE BASE	2
14	12817	12817	SHIFTER HANDLE	1
15	81025	81025	BRAKE DRAG	1
16	11308	11308	SPACER WORM	2
17	----	22775	PLUG PIPE	1
18	18009	18009	PLUG PIPE	1
19	18026	18026	SEAL GREASE	2
20	11117	11117	KEY WORM GEAR	2
21	18015	18015	CONE BEARING	2
22	18016	18016	CUP BEARING	2
23	18027	18027	GASKET	3
24	21925	21925	BAND BRAKE	1
25	11133	11133	WORM HOUSING COVER GASKET	3
26	18019	18019	RETAINER RING	1
27	18030	18030	KEY WORM	1
28	18020	18020	KEY CLUTCH	2
29	----	10009	CAPSCREW	2
30	11837	11837	ROLLPIN	2
31	18047	18047	FITTING GREASE	1
32	19045	19045	PLUG PIPE	1
33	----	11799	FITTING GREASE	2
34	13839	13839	SHIFTER FORK	1
35	----	18003	WASHER LOCK	16
36	----	11767	CAPSCREW	6
37	----	11011	WASHER LOCK	6
38	13005	13005	CAPSCREW	2
39	----	12780	WASHER LOCK	2
40	18024	18024	BEARING CONTAINER GASKET	3
41	18044	18044	KEY	1
42	18028	18028	DRUM BRAKE	1
43	12075	12075	SETSCREW	1
44	----	21961	CAPSCREW	12
45	13468	13468	JAM NUT	4
46	18029	18029	BRAKE BAND SPRING	1

Eastern Wrecker Sales, Inc. - www.easternwrecker.com - 919-553-4038

12,000# WINCH ITEMS (BRADEN)

ITEM	PART NO.	REFERENCE NO.	DESCRIPTION	QTY.
47	11240	11240	RETAINER RING	1
48	----	23353	SPRING	1
49	10078	10078	KEY	1
50	23078	23078	SPACER	1
51	13680	13680	THRUST RING	1
52	----	22703	CAPSCREW	4
53	----	24032	SETSCREW	1
54	----	23310	WARNING PLATE	1
55	----	11842	DRIVE SCREW	2
56	23079	23079	MOTOR ADAPTER	1
57	23081	23081	COUPLING HALF (WORM SHAFT)	1
58	23083	23083	COUPLING HALF (MOTOR SHAFT)	1
59	13424	13424	ROLLER CHAIN	1
60	23085	23085	SPACER	1
61	----	21959	SHIPPING COVER	1
62	----	22704	CAPSCREW	4
63	13028	13028	ROLLPIN	1
64	18002	18002	SPRING	1
65	18056	18056	ROLLPIN	1
66	61333	61333	HYDRAULIC MOTOR ADAPTER KIT, 12,000# WINCH (INCL ITEMS 67- 78)	1
67	23079	23079	ADAPTER, MOTOR	1
68	23081	23081	COUPLING HALF, WINCH	1
69	23083	23083	COUPLING HALF, MOTOR	1
70	23078	23078	SPACER, CONSTANT	1
71	13424	13424	CHAIN ROLLER	1
72	----	----	CAPSCREW	4
73	----	----	CAPSCREW	4
74	----	27152	LOCKWASHER	4
75	----	11026	LOCKWASHER	4
76	----	23085	SPACER	1
77	----	----	CAPSCREW	4
78	110452	23353	SPRING SPACER	1

Eastern Wrecker Sales, Inc. - www.easternwrecker.com - 919-553-4038

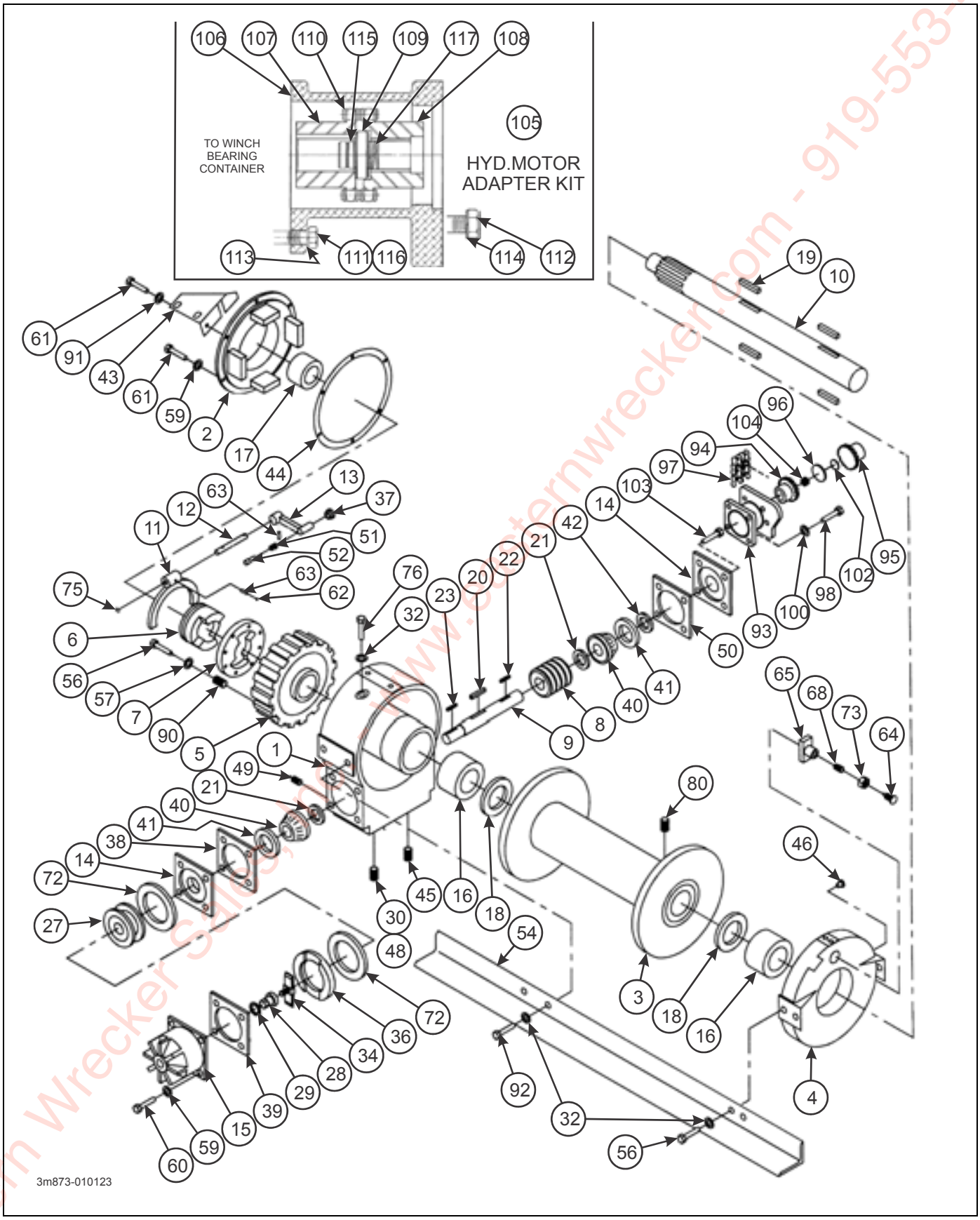

Figure 2-96: 20,000 Lb. Winch Items

Eastern Wrecker Sales, Inc. - www.easternwrecker.com - 919-553-4038

20,000# WINCH ITEMS (BRADEN)

ITEM	PART NO.	REFERENCE NO.	DESCRIPTION	QTY.
	3-873-010123		WINCH 20,000# W/BOLT-ON ANGLES	
1	81078	81078	WORM HOUSING ASSEMBLY	1
2	106956	81082	COVER ASSEMBLY WORM HOUSING	1
3	----	101142	DRUM CABLE	1
4	81077	81077	LEG ASSEMBLY BEARING	1
5	11434	11434	WORM, GEAR RIGHT	1
6	11421	11421	CLUTCH, SLIDING	1
7	11419	11419	DRIVE, CLUTCH	1
8	154166	11404	WORM RIGHT	1
9	----	11405	SHAFT, WORM	1
10	139479	11414	SHAFT, CABLE DRUM	1
11	11440	11440	FORK SHIFTER	1
12	11441	11441	SHAFT SHIFTER	1
13	26976	26976	HANDLE SHIFTER	1
14	124549	11427	CONTAINER BEARING	2
15	----	11445	COVER WORM BRAKE	1
16	18035	18035	BUSHING	2
17	11425	11425	BUSHING	1
18	11420	11420	RING, RETAINING	2
19	163472	22055	DRUM, KEY CABLE	4
20	11402	11402	KEY, WORM	1
21	11407	11407	SPACER, WORM	2
22	23367	23367	KEY, SPROCKET	1
23	10078	10078	KEY, ROTOR	1
27	81080	81080	ROTOR ASSEMBLY, BRAKE	1
28	11599	11599	ADJUSTING NUT, WORM BRAKE	1
29	12465	12465	O-RING	1
30	----	19014	PLUG, FILLER	1
32	----	11026	WASHER, LOCK	10
34	81081	81081	SPRING ASSEMBLY, SAFETY BRAKE	1
36	11431	11431	PLATE, PRESSURE	1
37	18022	18022	KNOB, SHIFTER	1
38	11429	11429	GASKET	4
39	11446	11446	GASKET	2
40	18033	18033	BEARING CONE	2
41	18034	18034	BEARING CUP	2
42	12073	12073	SEAL GREASE	1
43	12783	12783	BRACKET SHIFTER	1
44	11411	11411	COVER GASKET HOUSING	1
45	19045	19045	PLUG DRAIN	1
46	18047	18047	FITTING GREASE	1
48	----	22775	PLUG VENT	1
49	----	18009	PLUG LEVEL	1
50	11430	11430	GASKET	4
51	11310	11310	SPRING SHIFTER KNOB	1
52	11309	11309	STEM SHIFTER KNOB	1
54	----	28942	ANGLE FRONT BASE	1
55	----	28943	ANGLE REAR BASE (NOT SHOWN)	1

Eastern Wrecker Sales, Inc. - www.easternwrecker.com - 919-553-4038

20,000# WINCH ITEMS (BRADEN)

ITEM	PART NO.	REFERENCE NO.	DESCRIPTION	QTY.
56	----	13938	CAPSCREW	16
57	----	12781	WASHER, LOCK	8
58	----	21044	CAPSCREW	4
59	----	11025	WASHER, LOCK	3
60	----	22695	CAPSCREW	4
61	----	21964	CAPSCREW	6
62	12146	12146	PLUG, EXPANSION	A/R
63	13028	13028	ROLLPIN	A/R
64	11398	11398	SCREW, ADJUSTING	1
65	88005	88005	SHOE ASSEMBLY DRAG BRAKE	1
68	18002	18002	SHOE ASSEMBLY DRAG BRAKE	1
72	11426	11426	DISC, FRICTION	2
73	11791	11791	NUT, JAM	1
75	12767	12767	PLUG, EXPANSION	A/R
76	----	22729	CAPSCREW	2
77	----	23245	SAE PLATE-AMU7-16F (NOT SHOWN)	1
78	----	23310	PLATE, WARNING (NOT SHOWN)	1
79	----	11842	SCREW, DRIVE (NOT SHOWN)	4
80	139478	12228	SCREW, SET	1
90	----	11435	INSERT THREAD	8
91	----	11014	LOCKWASHER	1
92	----	22697	CAPSCREW (NOT SHOWN)	5
93	23079	23079	ADAPTER - MOTOR	1
94	23081	23081	COUPLING HALF-WINCH	1
95	----	23142	COUPLING HALF-MOTOR	1
96	23078	23078	SPACER - CONSTANT	1
97	13424	13424	ROLLER, CHAIN	1
98	----	22704	CAPSCREW	4
99	----	13413	CAPSCREW (NOT SHOWN)	4
100	----	18003	LOCKWASHER	4
101	----	11026	LOCKWASHER (NOT SHOWN)	4
102	----	23183	SPACER - VARIABLE	2
103	----	22703	CAPSCREW	4
104	----	23353	SPRING - SPACER	1
105	----	61344	HYDRAULIC MOTOR ADAPTER KIT, 20,000# WINCH (INCL ITEMS 106-117)	1
106	23079	23079	ADAPTER, MOTOR	1
107	23081	23081	COUPLING HALF, WINCH	1
108	110448	23142	COUPLING HALF, MOTOR	1
109	23078	23078	SPACER, CONSTANT	1
110	13424	13424	CHAIN ROLLER	1
111	----	----	CAPSCREW	4
112	----	----	CAPSCREW	4
113	----	27152	LOCKWASHER	4
114	----	11026	LOCKWASHER	4
115	110451	23183	SPACER	1
116	----	----	CAPSCREW	4
117	110452	23353	SPRING SPACER	1

Eastern Wrecker Sales, Inc. - www.easternwrecker.com - 919-553-4038

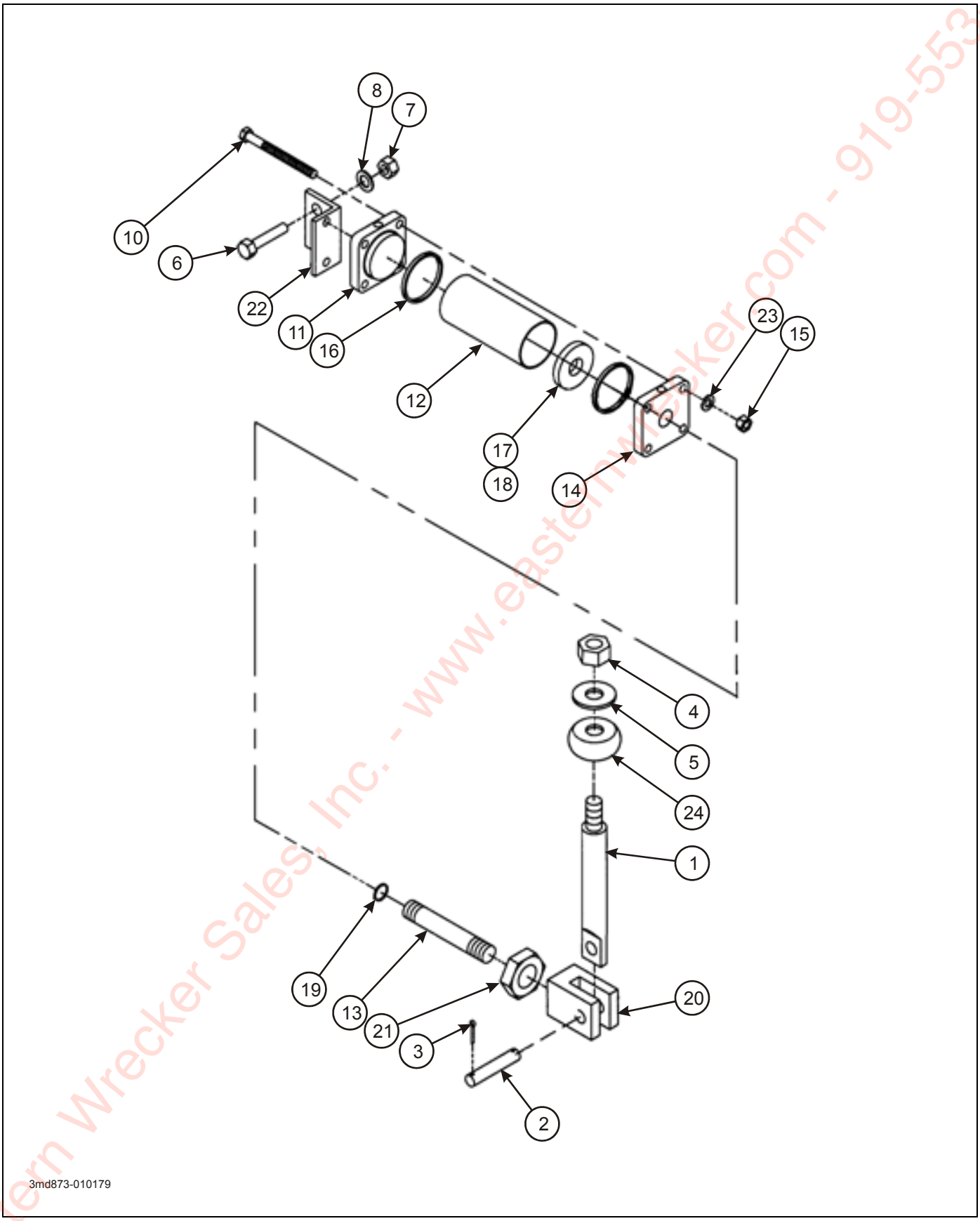

Figure 2-97: Winch Air Shift Cylinder

Eastern Wrecker Sales, Inc. - www.easternwrecker.com - 919-553-4038

WINCH AIR SHIFT CYLINDER

ITEM	PART NO.	REFERENCE NO.	DESCRIPTION	QTY.
	107368		CYLINDER, AIR W/ BRACKET (INCLUDES ITEMS 2 - 3, 6 - 23)	
1	107369		LEVER WINCH FREE SPOOL	1
2	-----	1976	PIN	1
3	-----	2356	COTTER PIN	1
4	1-512-010007-05	-----	NUT, HEX 1/4-20 GRB	1
5	1-861-010034-09	-----	WASHER, SPLIT LOCK 1/4	1
6	1-654-010055-01	-----	SCREW, HEX HEAD CAP 1/2-13 X 1 GR5	2
7	1-512-010005-09	-----	NUT, HEX LOCK 1/2-13 GRB	2
8	1-861-010032-14	-----	WASHER, FLAT 1/2	2
9	C2001	C2001	CYLINDER (INCLUDES ITEMS 10-23)	1
10	-----	1128	CAPSCREW	4
11	-----	1272	REAR COVER PLATE	1
12	-----	1277	TUBE	1
13	-----	2388	PISTON ROD	1
14	-----	1271	FRONT COVER PLATE	1
15	-----	1723	NUT	4
16	-----	1274	BACK-UP-RING	2
17	-----	1275	O-RING	1
18	-----	1273	PISTON	1
19	-----	1276	O-RING	1
20	1974	1974	CLEVIS	1
21	-----	1224	NUT	1
22	2389	2389	BRACKET	1
23	-----	1766	LOCKWASHER	4
24	3-150-010186	3-150-010186	BUSHING WINCH REMOTE LEVER	1
	-----	3109	O-RING KIT FOR CYLINDER	

Eastern Wrecker Sales, Inc. - www.easternwrecker.com - 919-553-4038

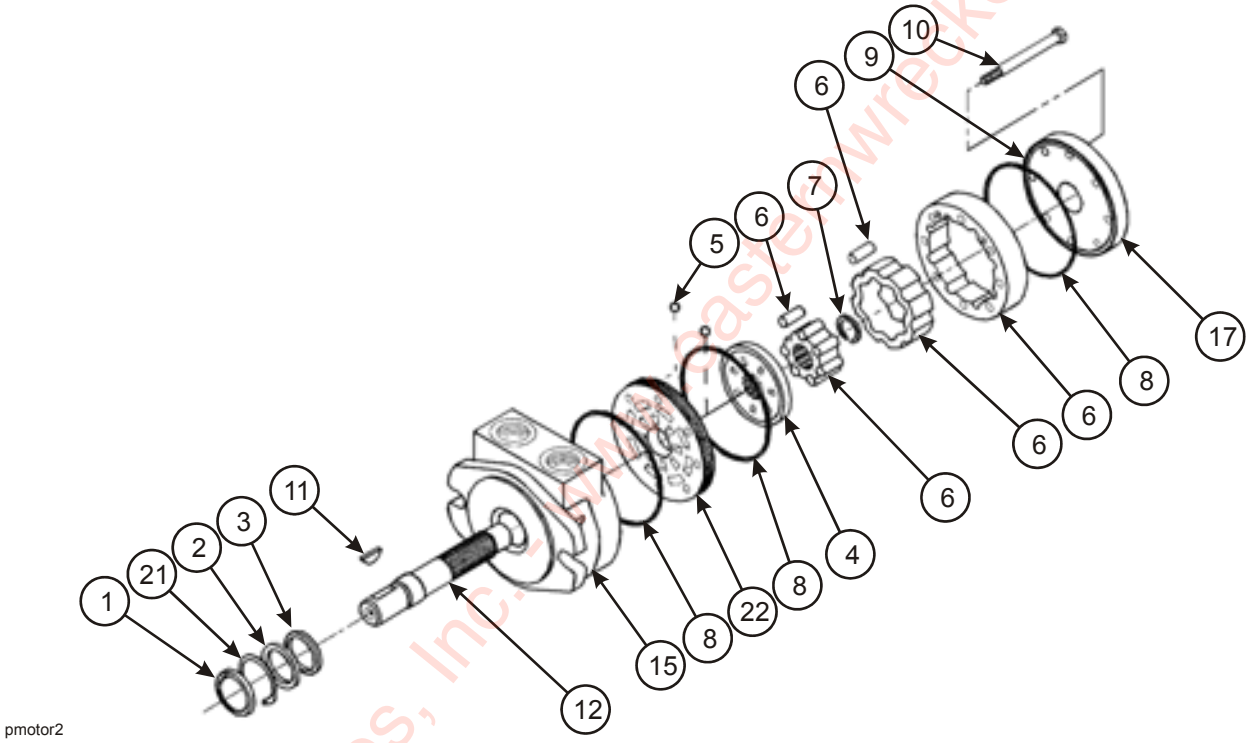

Figure 2-98: Winch Motor Assembly

Eastern Wrecker Sales, Inc. - www.easternwrecker.com - 919-553-4038

WINCH MOTOR ASSEMBLY

ITEM	PART NO.	REFERENCE NO.	DESCRIPTION	QTY.
	3-481-010006		MOTOR, HYDRAULIC (FOR 12K WINCH)	
	3-481-010007		MOTOR, HYDRAULIC (FOR 20K WINCH)	
1	-----	2183	SEAL DUST	1
2	-----	2177	BACK-UP RING	1
3	-----	2175	SEAL LIP	1
4	-----	1644	ROTARY VALVE	1
5	-----	1021	CHECK VALVE BALL	2
6	-----	1004-6	IGR ASSEMBLY (FOR 20K WINCH)	1
	-----	1004-3	IGR ASSEMBLY (FOR 12K WINCH)	1
7	-----	1296	SNAP RING	1
8	1046	1046	SQUARE RING SEAL	3
9	-----	1019-4	PLUG VENT W/O-RING	1
10	-----	1014-4	BOLTS HEX (FOR 20K WINCH)	8
	-----	1114-5	BOLTS HEX (FOR 12K WINCH)	8
11	-----	1655	KEY WOODRUFF	1
12	-----	2265-6	SHAFT(FOR 20K WINCH)	1
	-----	2109-3	SHAFT(FOR 12K WINCH)	1
15	-----	M110AB-4	BODY/BEARING ASSEMBLY (FOR 20K WINCH)	1
	-----	PA-2328-2	BODY/BEARING ASSEMBLY (FOR 12K WINCH)	1
17	-----	M110C-1	COVER/BEARING ASSEMBLY	1
21	-----	2180	SNAP RING SHAFT	1
22	-----	1865	COMMUTATOR PLATE	1
	2263	2263	SEAL KIT BODY	1
	-----	2480	SEAL KIT BODY VITON	1

Eastern Wrecker Sales, Inc. - www.easternwrecker.com - 919-553-4038

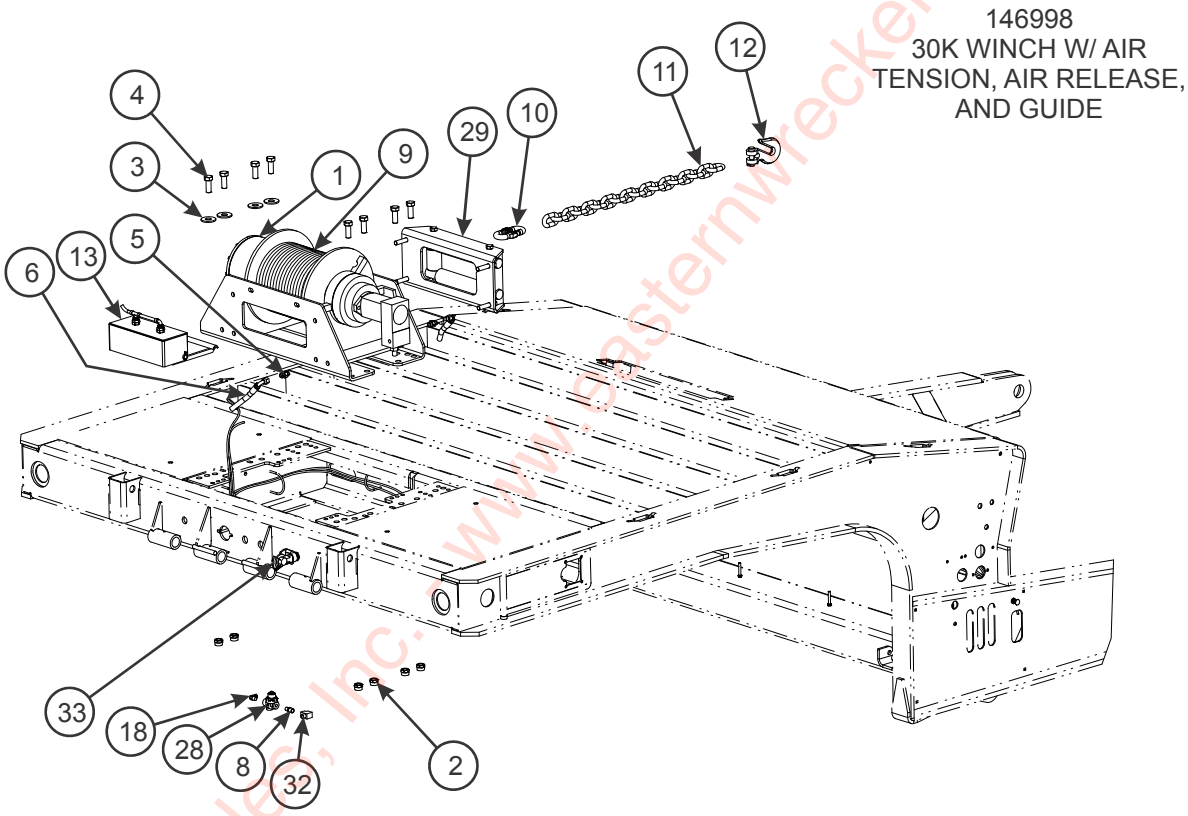

Figure 2-99: 30,000 Lb. Upper Deck Winch Installation (1 of 3)

Eastern Wrecker Sales, Inc. - www.easternwrecker.com - 919-553-4038

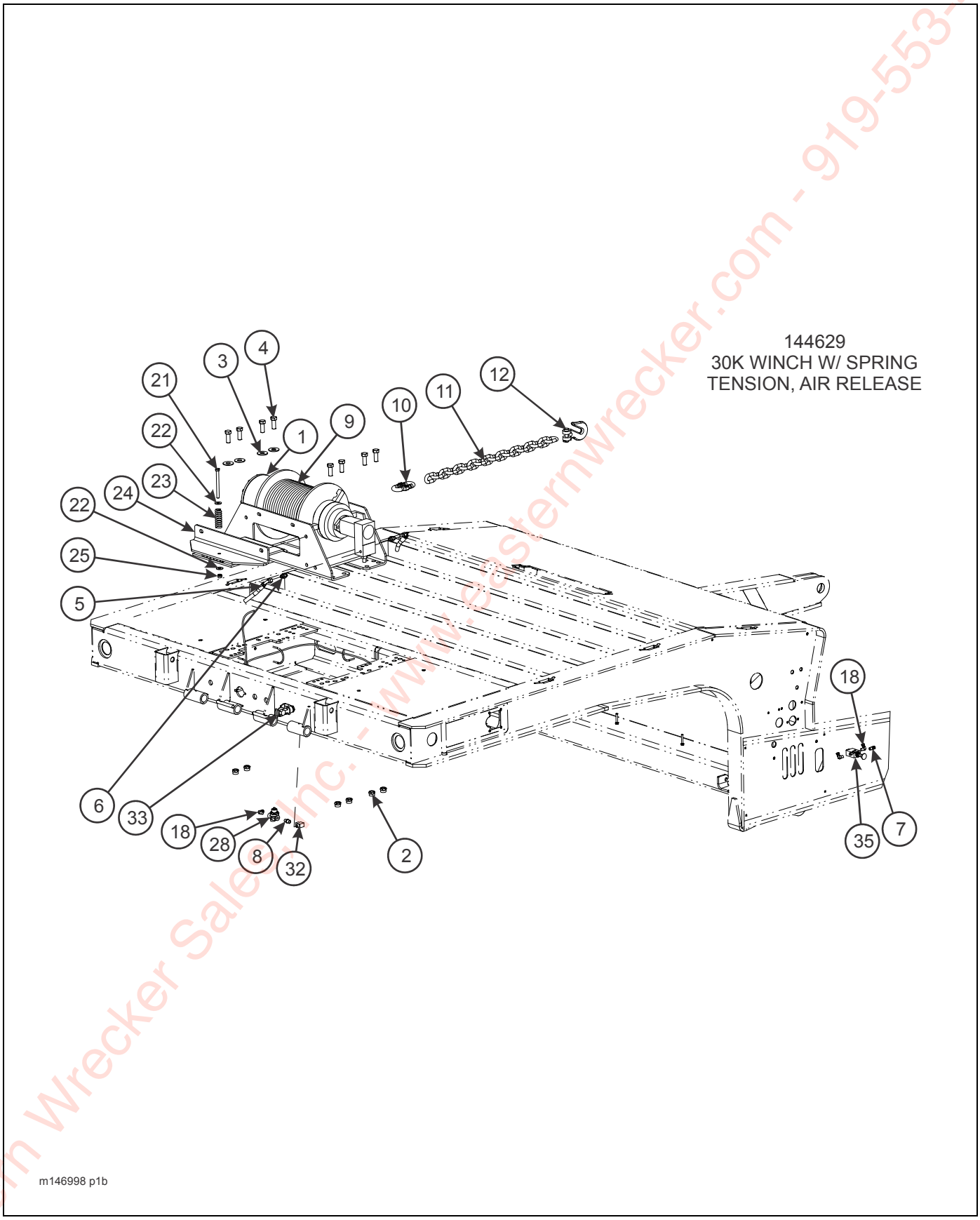

Figure 2-100: 30,000 Lb. Upper Deck Winch Installation (2 of 3)

Eastern Wrecker Sales, Inc. - www.easternwrecker.com - 919-553-4038

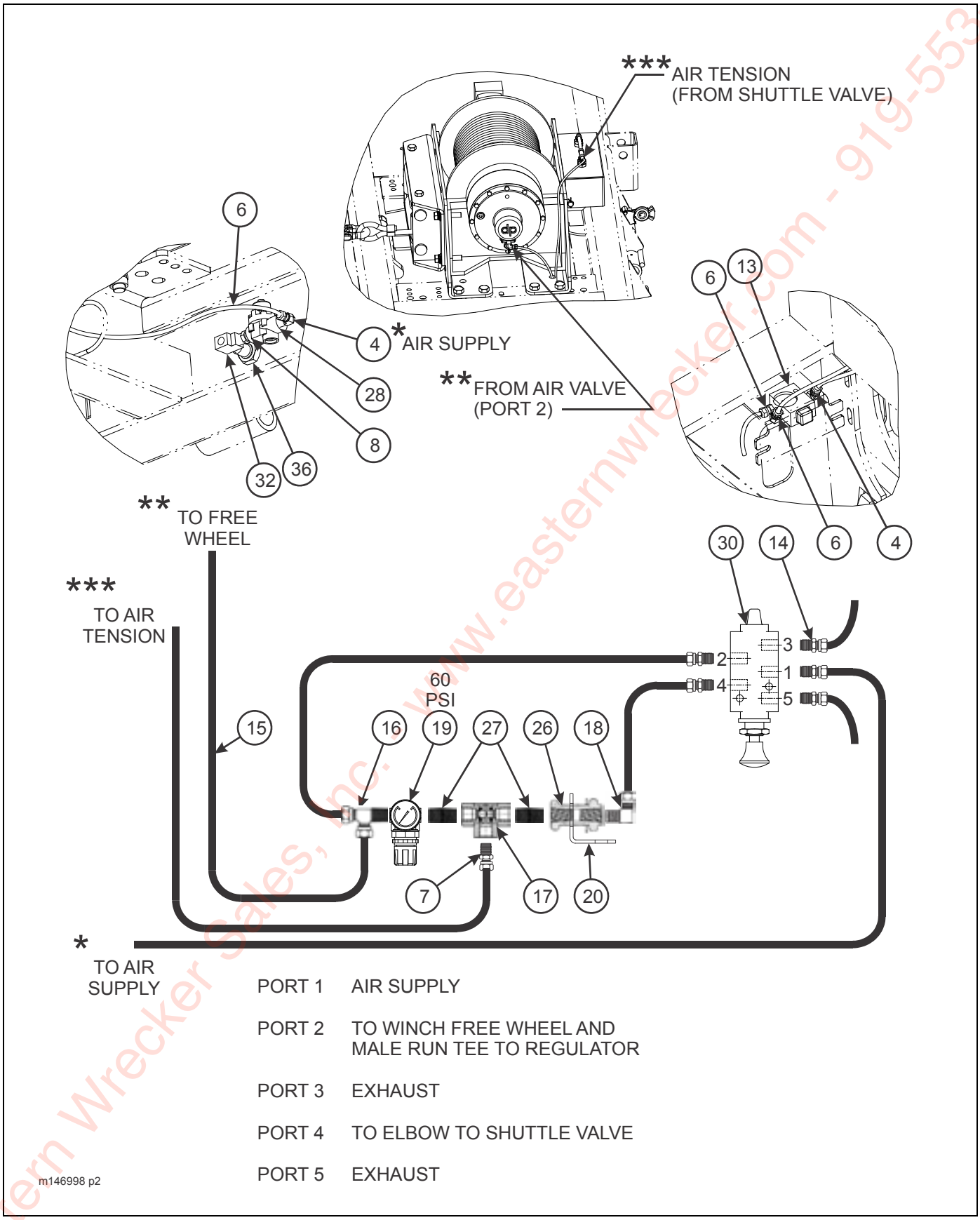

PORT 1	AIR SUPPLY
PORT 2	TO WINCH FREE WHEEL AND MALE RUN TEE TO REGULATOR
PORT 3	EXHAUST
PORT 4	TO ELBOW TO SHUTTLE VALVE
PORT 5	EXHAUST

Figure 2-101: 30,000 Lb. Upper Deck Winch Installation (3 of 3)

Eastern Wrecker Sales, Inc. - www.easternwrecker.com - 919-553-4038

30K UPPER DECK WINCH INSTALLATION (DP)

ITEM	PART NO.	DESCRIPTION	QTY.
	146998	WINCH, 30K W/ AT, AR, & GUIDED	
		(INCL ITEMS 1,2,4,6-8,10-20,26-31)	
	147193	WINCH, 30K SPG TENS NO FREE	
		(INCL ITEMS 1-6,10-13,21-25)	
	144629	WINCH INST, 30K SPG TENS	
		(INCL ITEMS 1-4, 6-8, 12-13, 15, 18, 21-25, 28)	
1	3-873-010173	WINCH, 30K ITEMS (SEE PAGE 2-187)	1
2	1-512-010005-15	NUT, HEX LOCK 3/4-10 GRB	10
3	1-861-010034-17	WASHER, SPLIT LOCK 3/4	10
4	1-654-010061-07	SCREW, HEX HEAD CAP 3/4-10 X 2-1/2 GR5	10
5	202702-8-8S	ADAPTER #8 O-RING TO #8 TUBE	2
6	1-397-010302220	HOSE ASSEMBLY	2
7	1-297-010007-05	FITTING, AIR	1
8	1-297-010019-05	FITTING, BRS PIPE HEX 3/8 X 1/4	1
9	132833	CABLE ASSEMBLY 5/8 X 85 W/ LOOP	REF
	132834	CABLE ASSEMBLY 5/8 X 150 W/ LOOP	REF
10	3-174-010059	CHAIN LINK 5/8	1
11	3-174-010060036	CHAIN GR 80	1
12	1-382-010035-06	HOOK, CLEVIS	1
13	3-873-010172	WINCH, CABLE AIR TENSION 30K (SEE PAGE 2-193)	1
14	1-297-010007-04	FITTING AIR	5
15	1-833-010001	NYLON TUBING 1/4 OD	AR
16	1-297-010011-02	FITTING, AIR TEE	1
17	3-843-010039-02	VALVE AIR SHUTTLE 1/4	1
18	1-297-010008-07	FITTING, AIR 90	3
19	3-626-010004	REGULATOR, AIR PRESSURE	1
20	3-120-010445	BRACKET, PRESSURE REGULATOR	1
21	1-654-010055-17	SCREW, HEX HEAD CAP 1/2-13 X 6 GR5	1
22	1-861-010032-15	WASHER, FLAT 1/2	2
23	3-720-010010	SPRING COMP LEVEL WIND	1
24	111641	WINCH TENSIONER WLDMT 30K	1
25	1-512-010005-09	NUT, HEX LOCK 1/2-13 GRB	1
26	1-297-010022-02	FITTING, AIR ANCHOR	1
27	1-297-010020-02	FITTING, BRASS PIPE	2
28	905-54-107	BRAKE PROTECTION VALVE	1
	167692	FILTER	1
29	122333	WINCH ROLLER GUIDE 30K PLNTY DP (SEE PAGE 2-191)	1
30	139552	VALVE, AIR 5 WAY/2 POS	1
31	125892	CLAMP, CABLE 3/8 (NOT SHOWN)	1
32	1-297-010018-03	FITTING, TEE	REF
33	108801	GLAD HAND, RED AIR	REF
34	116837	VALVE, MOUNT WELDMENT (NOT SHOWN)	REF
35	134657	VALVE, AIR 3 WAY/2 POS	1
36	55B61	FRAME UNION	REF

Eastern Wrecker Sales, Inc. - www.easternwrecker.com - 919-553-4038

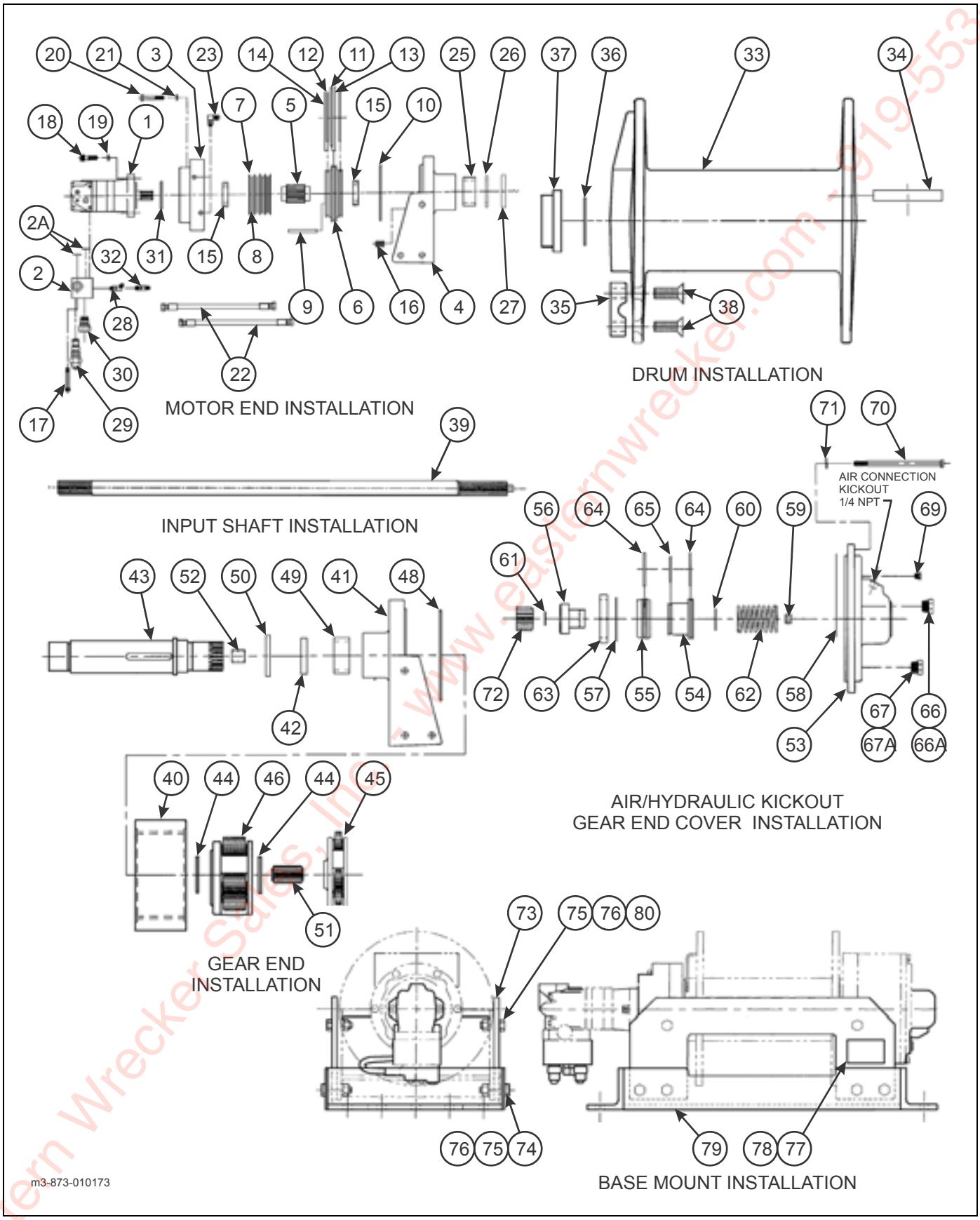

Figure 2-102: 30,000 Lb. Winch Items

Eastern Wrecker Sales, Inc. - www.easternwrecker.com - 919-553-4038

30,000# WINCH ITEMS (DP)

ITEM	PART NO.	REFERENCENO.	DESCRIPTION	QTY.
	3-873-010173		WINCH 30K ITEMS	
			MOTOR END INSTALLATION	
1	137887	73076	MOTOR, HYDRAULIC	1
2	137888	11604	VALVE, COUNTERBALANCE	1
2A	-----	9817	O-RING, 13/16 I.D. X 3/32 SECTION	2
3	-----	11535	BRAKE HOUSING	1
4	-----	13299	SUPPORT MOTOR END	1
5	-----	11750	SHAFT BRAKE	1
6	-----	11443	PISTON BRAKE	1
7	-----	11603	PLATE DISC FRICTION	10
8	-----	3159	PLATE DRIVE BRAKE	9
9	-----	3263	PIN DOWEL 5/16 DIA. X 3-1/2	2
10	137993	9844	O-RING, 7 O.D. X 6-3/4 I.D.	1
11	137994	9853	O-RING, 6-1/2 I.D. X 3/16 SECTION	1
12	137421	9851	O-RING, 5-3/8 I.D. X 5-3/4 O.D. X 3/16	2
13	-----	9854	RING, BACK-UP	1
14	137422	9852	RING, BACK-UP 5-3/8 I.D.	1
15	-----	81434	BEARING BALL 1-3/4 I.D.	2
16	-----	2319	SPRING COMPRESSION	12
17	-----	1345	CAP SCREW, SOCKET HEAD 3/8-16 X 2-1/2	2
18	-----	1143	CAP SCREW, SOCKET HEAD 1/2-13 X 1-1/2	2
19	-----	1144	WASHER, LOCK HI COLLAR 1/2	6
20	-----	1376	CAP SCREW, HEX HEAD 7/16 X 2-1/2	6
21	-----	1388	WASHER, LOCK 7/16	4
22	-----	75038	HOSE 1/4R1 X 12”	1
23	-----	76017	ADAPTER, 90	1
24	-----	10708	TAG WARNING (NOT SHOWN)	1
25	-----	81454	BEARING -TORRINGTON	1
26	-----	13288	WASHER THRUST BRONZE	1
27	137880	9890	SEAL SHAFT	1
28	137641	76029	ADAPTER, 45	1
29	137883	3177	CARTRIDGE COUNTERBALANCE	1
30	137884	70035	PLUG ASSEMBLY - VALVE COUNTERBALANCE	2
31	137882	9880	O-RING 3 ID X 1/8 SECTION	1
32	-----	76027	ADAPTER STRAIGHT	1
	137885	9400	DISC PLATE KIT (INCL ITEMS 7-8 & 16)	1
	137886	9406	SEAL KIT (INCL ITEMS 10-14)	1
			DRUM INSTALLATION	
33	-----	13285	DRUM	1
34	-----	13293	KEY DRUM	2
35	137569	12518	CLIP CABLE THREADED	1
36	-----	9602	O-RING 2-5/8 ID X 1/8 W	1
37	-----	13286	SPACER	1
38	137570	1587	CAP SCREW, FLAT SKT HEAD 5/8-11 X 1-3/4	2

Eastern Wrecker Sales, Inc. - www.easternwrecker.com - 919-553-4038

30,000# WINCH ITEMS (DP)

ITEM	PART NO.	REFERENCENO.	DESCRIPTION	QTY.
			INPUT SHAFT INSTALLATION	
39	-----	13317	SHAFT INPUT	1
			GEAR END INSTALLATION	
40	-----	3126	GEAR RING	1
41	-----	13300	SUPPORT GEAR END	1
42	-----	13288	WASHER THRUST	1
43	-----	13301	SHAFT OUTPUT	1
44	-----	13164	WASHER THRUST NYLON 3-1/2 OD X 3/16	2
45	-----	12486	CARRIER ASSEMBLY PRIMARY	1
46	-----	12516	CARRIER ASSEMBLY SECONDARY	1
47	-----	10848	LABEL WARNING (NOT SHOWN)	1
48	137879	9695	O-RING 8-3/4 I.D. X 1/8 SECTION	1
49	-----	81454	BEARING	1
50	137880	9890	SEAL SHAFT	1
51	-----	13306	GEAR SUN	1
52	-----	81608	BUSHING ID 1-1/4 OD X 1 LG	1
			AIR/HYD. KICKOUT GEAR END COVER INSTALLATION	
53	-----	13675	COVER GEAR END	1
54	-----	13295	PISTON AKO B/C/D	1
55	-----	13296	CYLINDER PISTON	1
56	-----	13297	COUPLING DRIVE	1
57	-----	3632	RING RETAINING RD SEC 3 O.D. X .10 SEC	1
58	137879	9695	O-RING 8-3/4 I.D. X 1/8 SECTION	1
59	-----	81612	BUSHING BRONZE 3/8 I.D. X 3/8 L	1
60	-----	3303	RING RETAINING 1-1/4	1
61	-----	3321	RING RETAINING RD SEC .805 I.D.	1
62	-----	2309	SPRING COMPRESSION	1
63	-----	13288	WASHER THRUST BRONZE 3.81 X .406 W	1
64	137881	9672	O-RING 2-5/8 I.D. X 1/8 SECTION	2
65	-----	9704	O-RING 2-1/8 I.D. X 2-3/8 O.D.	1
66	105967	76344	PLUG SKT HD O-RING #10 7/8 - 14	1
66A	-----	9992	O-RING .755 I.D. X .097 W 3-910	1
67	105954	76343	PLUG SKT HD O-RING MAG #10	1
67A	-----	9992	O-RING .755 I.D. X .097 W 3-910	1
68	-----	1157	CAPLUG #4 RED (NOT SHOWN)	1
69	105953	3059	RELIEF VENT	1
70	-----	1317	SCREW CAP HEX HEAD 3/8 X 16 X 5-1/2	12
71	-----	1395	WASHER LOCK 3/8	12
72	-----	13235	GEAR SUN AKO	1
			BASE MOUNT INSTALLATION	
73	-----	14068	BASE MOUNT CUSTOM - B SERIES - A LENGTH	2
74	-----	1506	SCREW CAP HEX HEAD 5/8-11 X 2-1/2 GR5	12
75	-----	1590	NUT, HEX 5/8 - 11 GR2	12
76	-----	1595	WASHER LOCK 5/8 MEDIUM PLAIN	12

Eastern Wrecker Sales, Inc. - www.easternwrecker.com - 919-553-4038

30,000# WINCH ITEMS (DP)

ITEM	PART NO.	REFERENCENO.	DESCRIPTION	QTY.
77	-----	1165	RIVET DRIVE U TYPE #2 X 1/4 LONG	4
78	-----	10466	PLATE INFORMATION	1
79	-----	14073	BASE SUPPORT	1
80	-----	1504	CAP SCREW, HEX HEAD 5/8-11 X 2 GR5	12

NOTE: WHEN ORDERING WINCH PARTS, CUSTOMER MUST GIVE SERIAL NO. FOR WINCH. SERIAL NO. IS LOCATED ON SERIAL NO. TAG ON WINCH BASE AND STAMPED INTO TOP OF MOTOR END SUPPORT.

Eastern Wrecker Sales, Inc. - www.easternwrecker.com - 919-553-4038

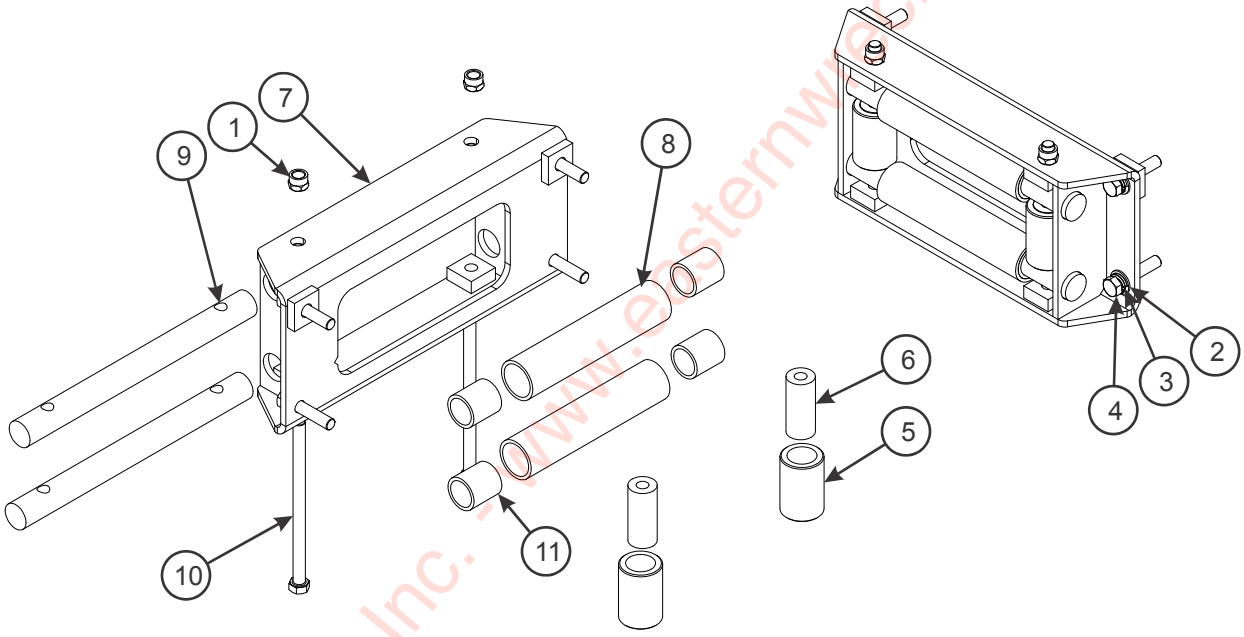

Figure 2-103: Winch Roller Guide - 30K

Eastern Wrecker Sales, Inc. - www.easternwrecker.com - 919-553-4038

WINCH ROLLER GUIDE - 30K

ITEM	PART NO.	DESCRIPTION	QTY.
	122333	WINCH ROLLER GUIDE - 30K PLNTY DP	
1	1-512-010005-13	NUT, HEX LOCK 5/8-11 GRB	2
2	1-861-010032-18	WASHER, FLAT 5/8N	4
3	1-861-010034-15	WASHER, SPLIT LOCK 5/8	4
4	1-654-010059-09	SCREW, HEX HEAD CAP 5/8-11 X 3 GR5	4
5	111385	TUBE VERTICAL ROLLER FAIRLEAD	2
6	111386	BUSHING FAIRLEAD VERT ROLLER	2
7	122334	MOUNT WELDMENT	1
8	122336	TUBE, HORIZONTAL ROLLER	2
9	122337	ROD, ROLLER	2
10	122458	SCREW, HEX HEAD CAP 5/8-11 X 10 GR8	2
11	AA-1807	SLEEVE, BEARING 1-1/2D X 1-7/8OD X 2	4

Eastern Wrecker Sales, Inc. - www.easternwrecker.com - 919-553-4038

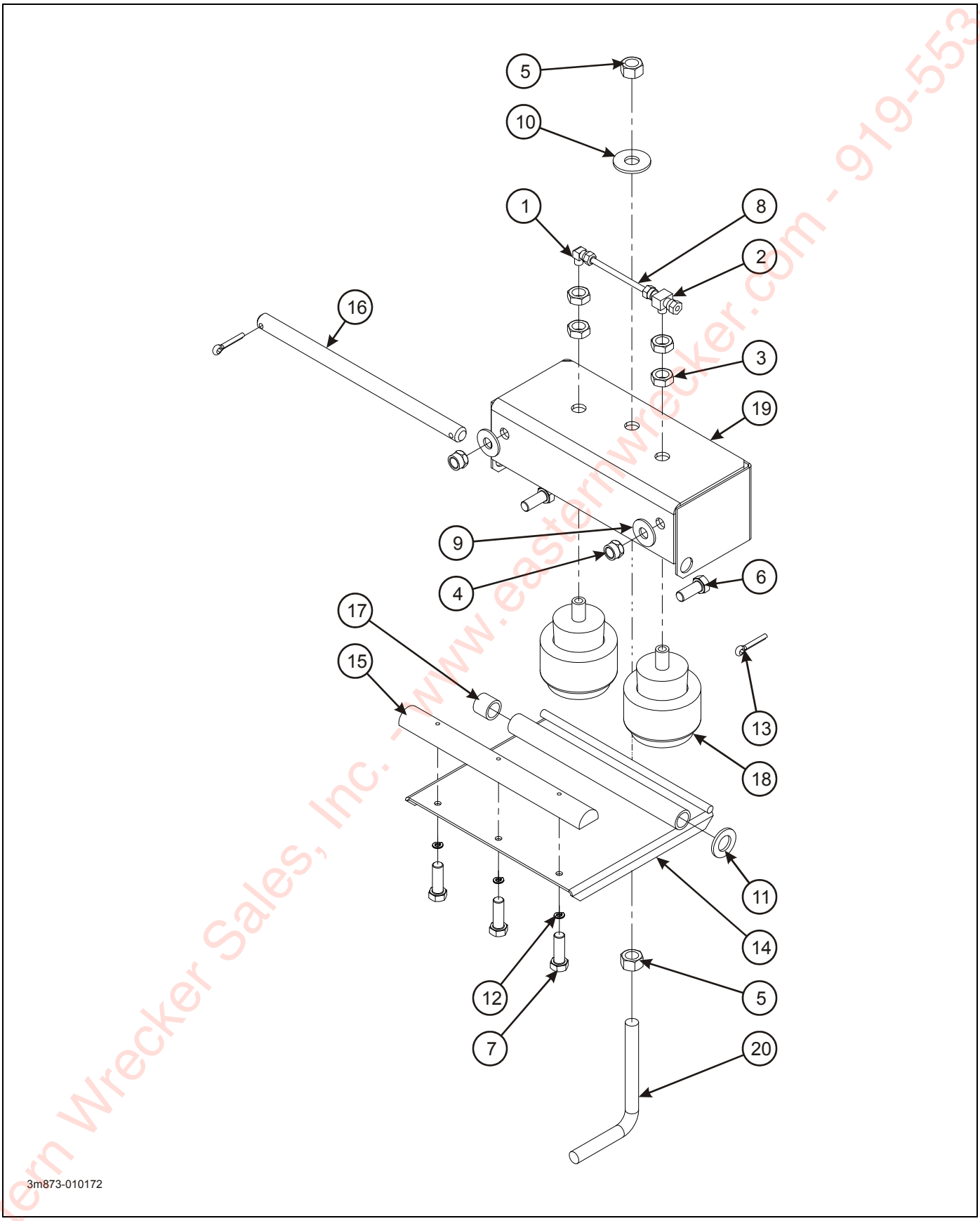

Figure 2-104: Winch, Cable Air Tension

Eastern Wrecker Sales, Inc. - www.easternwrecker.com - 919-553-4038

WINCH, CABLE AIR TENSION

ITEM	PART NO.	DESCRIPTION	QTY.
	3-873-010172	WINCH CABLE AIR TENSION 30K	
1	1-297-010008-05	FITTING, AIR 90	1
2	1-297-010015-02	FITTING, AIR TEE	1
3	1-511-010001-07	NUT, HEX JAM 5/8-11	4
4	1-512-010005-09	NUT, HEX LOCK 1/2-13 GRB	2
5	1-512-010007-11	NUT, HEX 5/8-11 GRB	2
6	1-654-010055-02	SCREW, HEX HEAD CAP 1/2-13 X 1-1/4 GR5	2
7	1-654-010047-04	SCREW, HEX HEAD CAP 1/4/20 X 3/4 GR5	3
8	1-833-010001	TUBING, NYLON 1/4OD	1
9	1-861-010032-15	WASHER, FLAT 1/2W	2
10	1-861-010032-19	WASHER, FLAT 5/8W	1
11	1-861-010032-20	WASHER, FLAT 3/4N	1
12	1-861-010034-09	WASHER, SPLIT LOCK 1/4	3
13	119084	PIN, COTTER 1/4 X 1-1/2	2
14	132103	ARM WELDMENT, LEVEL WIND	1
15	132104	RUB BAR	1
16	133938	PIVOT PIN	1
17	133941	SPACER	1
18	137028	AIR SPRING 30K WINCH TENSION	2
19	160094	MOUNTING BRACKET, LEVEL WIND	1
20	161573	ADJUSTMENT BOLT LEVEL WIND	1

Eastern Wrecker Sales, Inc. - www.easternwrecker.com - 919-553-4038

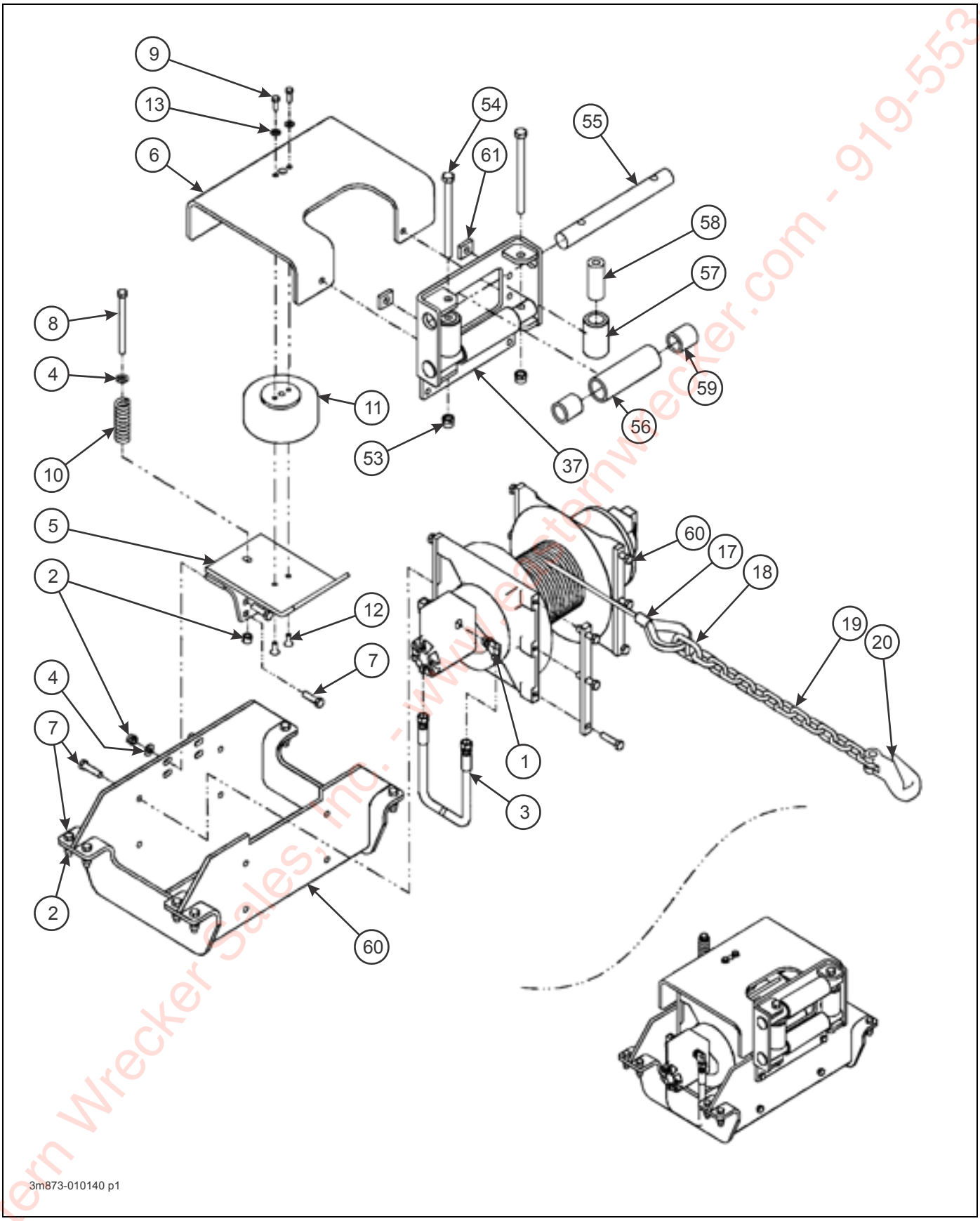

Figure 2-105: 12K, 15K, & 20K Upper Deck Winch (DP)
(1 of 2)

Eastern Wrecker Sales, Inc. - www.easternwrecker.com - 919-553-4038

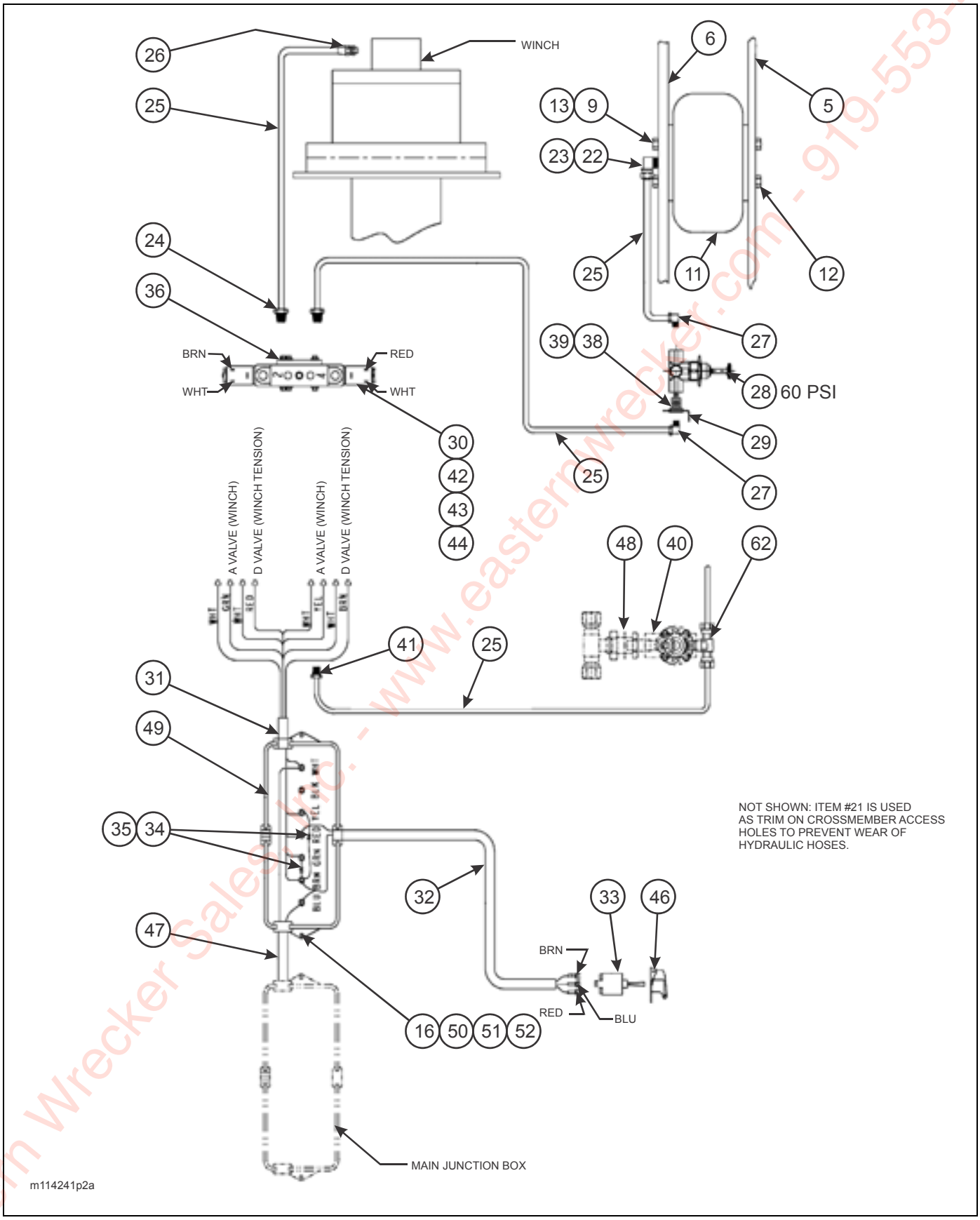

Figure 2-106: 12K, 15K, & 20K Upper Deck Winch (DP)
(2 of 2)

Eastern Wrecker Sales, Inc. - www.easternwrecker.com - 919-553-4038

12K, 15K, & 20K UPPER DECK WINCH (DP)

ITEM	PART NO.	DESCRIPTION	QTY.
	114241	WINCH INSTALLATION 12K, 15K, 20K DP	REF
	111351	WINCH ROLLER GUIDE DP WINCH (OPTION) (INCL. ITEMS 37, 53-59, 61)	
1	2062-8-8S	ADAPTER, 90	2
2	1-512-010005-09	NUT, HEX LOCK 1/2-13	13
3	1-397-010301208	HOSE ASSEMBLY 1/2 X 208	2
4	1-861-010032-14	WASHER, FLAT 1/2	5
5	106379	WINCH TENSIONER WLDMT	1
6	106385	PLATE AIR TENSION (*)	1
7	1-654-010055-04	SCREW, HEX HEAD CAP 1/2-13 X 1-3/4 GR5	12
8	1-654-010055-17	SCREW, HEX HEAD CAP 1/2 -13 X 6 GR5	1
9	1-654-010036-05	SCREW, HEX HEAD CAP 3/8-16 X 1 GR8 (*)	2
10	3-720-010010	SPRING COMP LEVEL WIND	1
11	3-720-010042	SPRING, AIR 6-1/2 (*)	1
12	1-654-010141-04	SCREW, SOCKET HEAD CTSK 3/8-16 X 1 GR8 (*)	2
13	1-861-010032-10	WASHER, FLAT 3/8 (*)	2
16	1-654-010047-06	SCREW, HEX HEAD CAP 1/4-20 X 1 GR5 (*)	2
17	3-155-010018-6	CABLE, 5/8 W/ LOOP(20K)	REF
	3-155-010017-4	CABLE, 1/2 W/ LOOP 85 FT (12K AND 15K)	REF
18	3-174-010038	CHAIN LINK, CONNECTING 1/2	1
19	3-174-010039036	CHAIN, 1/2 X 36 GR7	1
20	7HCGHT500	1/2 CLEVIS GRAB HOOK	1
21	3-201-010001036	CONDUIT PLASTIC FLEX (*) (NOT SHOWN)	1
22	1-297-010031-02	FITTING, BRASS PIPE (*)	1
23	1-297-010032-03	FITTING, AIR 90 (*)	1
24	1-297-010007-04	FITTING, AIR (*)	2
25	1-833-010001	TUBING, NYLON 1/4 (*)	AR
26	1-297-010007-05	FITTING, AIR 1/4 (*)	1
27	1-297-010008-07	FITTING, AIR 90 (*)	2
28	3-626-010004	REGULATOR, AIR PRESSURE (*)	1
29	3-120-010445	BRACKET, PRESSURE REGULATOR (*)	1
30	3-843-010022	VALVE, PNEUMATIC 4 WAY (*)	1
31	3-368-010125	HARNESS ASSEMBLY (*)	1
32	3-368-010187	HARNESS, REMOTE SWITCH (*)	1
33	1-765-010065	TOGGLE SWITCH SPDT (*)	1
34	2-272-010109	ZENOR DIODE (* W/ REMOTE)	2
35	3-272-010018	HEAT SHRINK INSULATOR (* W/ REMOTE)	2
36	3-136-010001-01	BREATHER, PNEUMATIC EXHAUST (* W/O REMOTE)	2
37	111387	BRACKET WELDMENT FAIRLEAD	1
38	1-297-010022-02	FITTING, AIR ANCHOR (*)	1
39	1-297-010020-02	FITTING BRASS PIPE (*)	1
40	905-54-107	VALVE & FILTER PRESSURE (*)	REF
	167692	FILTER	1
41	1-297-010008-05	FITTING, AIR 90 (*)	1
42	1-654-010024014	SCREW, MACH SLOT FIL HEAD #6-32 X 1-1/2 (* W/O REMOTE)	2
43	1-861-010032-01	WASHER, FLAT #6 (* W/O REMOTE)	2
44	1-512-010003-02	NUT, HEX LOCK #6-32 (* W/O REMOTE)	2
46	3-348-010048	GUARD, SWITCH - 3 POSITION (*)	1

Eastern Wrecker Sales Inc. www.easternwrecker.com - 919-553-4038

12K, 15K, & 20K UPPER DECK WINCH (DP)

ITEM	PART NO.	DESCRIPTION	QTY.
47	3-368-010188	HARNESS, POWER JUMPER (*)	1
48	1-297-010019-05	FITTING, BR	REF
49	750-029	JUNCTION BOX 7 STUD (*)	1
50	1-512-010007-05	NUT, HEX 1/4-20 GRB (*)	2
51	1-861-010032-06	WASHER, FLAT 1/4N (*)	2
52	1-861-010034-09	WASHER, SPLIT LOCK 1/4 (*)	2
53	1-512-010005-13	NUT, HEX LOCK 5/8-11 GRB	2
54	1-654-010059-21	SCREW, HEX HEAD CAP 5/8-11 X 8	2
55	111383	ROD FAIRLEAD ROLLER	2
56	111384	TUBE HORIZONTAL ROLLER FAIRLEAD	2
57	111385	TUBE, VERTICAL ROLLER FAIRLEAD	2
58	111386	BUSHING, FAIRLEAD VERT ROLLER	2
59	3-150-010005	1-1/2 ID BRONZE SLEEVE BEARING	2
60	111091	WINCH DP 12K MANUAL	1
	111092	WINCH DP 12K AIR	1
	111093	WINCH DP 15K MANUAL	1
	111094	WINCH DP 15K AIR	1
	111095	WINCH DP 20K MANUAL	1
	111096	WINCH DP 20K AIR	1
		(SEE PAGE 2-201 FOR WINCH BREAKDOWNS)	
61	3-711-010120	SPACER, TOOL BOX 3/8 X 1-1/2	2
62	1-297-010015-03	FITTING, AIR BR TEE	1

*USED ON AIR TENSION RELEASE MODELS

Eastern Wrecker Sales, Inc. - www.easternwrecker.com - 919-553-4038

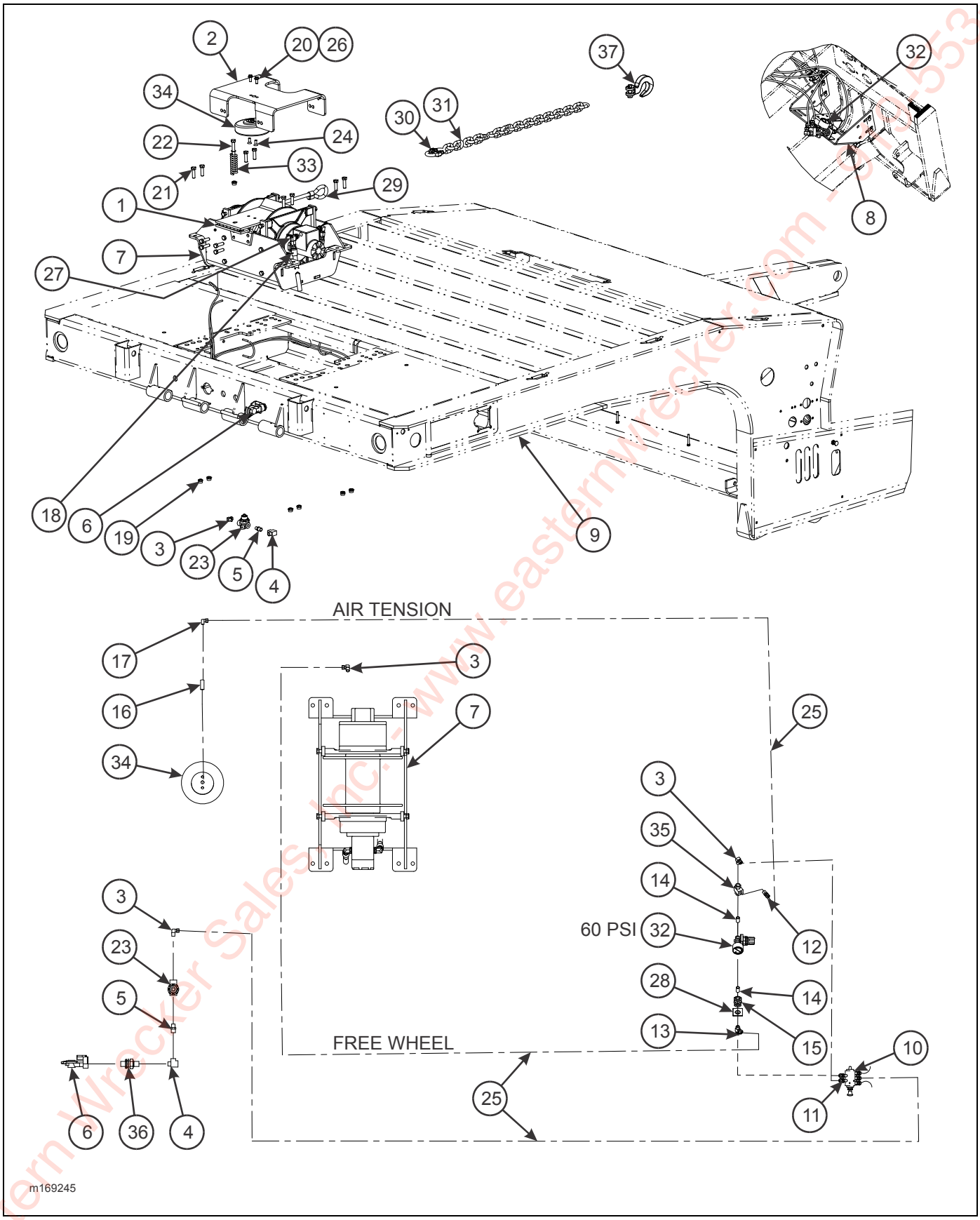

Figure 2-107: 20K Winch Installation, Air T/R (DP)

Eastern Wrecker Sales, Inc. - www.easternwrecker.com - 1-800-553-4038

20K WINCH INSTALLATION, AIR T/R (DP)

ITEM	PART NO.	DESCRIPTION	QTY.
	169245	WINCH INSTALLATION 20K AIR T/R DP	
1	106379	WINCH TENSIONER WLDMT	1
2	106385	PLATE AIR TENSION (*)	1
3	1-297-010008-07	FITTING, AIR 90 (*)	2
4	1-297-010018-03	FITTING, TEE	1
5	1-297-010019-05	FITTING, BR	REF
6	108801	GLAD HAND - RED AIR	REF
7	111096	WINCH DP 20K AIR (SEE PAGE 2-201)	1
8	116837	VALVE MOUNT WELDMENT CONTROLS	REF
9	-----	GOOSENECK WELDMENT	REF
10	139552	VALVE, AIR 5 WAY/S POSITION	1
11	1-297-010007-04	FITTING, AIR (*)	2
12	1-297-010007-05	FITTING, AIR 1/4 (*)	1
13	1-297-010011-02	FITTING, AIR M/RUN TEE	1
14	1-297-010020-02	FITTING BRASS PIPE (*)	1
15	1-297-010022-02	FITTING, AIR ANCHOR (*)	1
16	1-297-010031-02	FITTING, BRASS PIPE (*)	1
17	1-297-010032-03	FITTING, AIR 90 (*)	1
18	1-397-010301208	HOSE ASSEMBLY 1/2 X 208	2
19	1-512-010005-09	NUT, HEX LOCK 1/2-13	13
20	1-654-010036-05	SCREW, HEX HEAD CAP 3/8-16 X 1 GR8 (*)	2
21	1-654-010055-04	SCREW, HEX HEAD CAP 1/2-13 X 1-3/4 GR5	12
22	1-654-010055-17	SCREW, HEX HEAD CAP 1/2 -13 X 6 GR5	1
23	905-54-107	VALVE & FILTER PRESSURE (*)	REF
	167692	FILTER	1
24	1-654-010141-04	SCREW, SOCKET HEAD CTSK 3/8-16 X 1 GR8 (*)	2
25	1-833-010001	TUBING, NYLON 1/4 (*)	AR
26	1-861-010032-10	WASHER, FLAT 3/8 (*)	2
27	2062-8-8S	ADAPTER, 90	2
28	3-120-010445	BRACKET, PRESSURE REGULATOR (*)	1
29	3-155-010018-6	CABLE, 5/8 X 85’	REF
30	3-174-010038	CHAIN LINK, CONNECTING 1/2	1
31	3-174-010039036	CHAIN, 1/2 X 36 GR7	1
32	3-626-010004	REGULATOR, AIR PRESSURE (*)	1
33	3-720-010010	SPRING COMP LEVEL WIND	1
34	3-720-010042	SPRING, AIR 6-1/2 (*)	1
35	3-843-010039-02	VALVE, AIR SHUTTLE	1
36	55B61	FRAME UNION	REF
37	7HCGHT500	1/2 CLEVIS GRAB HOOK	1

Eastern Wrecker Sales, Inc. - www.easternwrecker.com - 919-553-4038

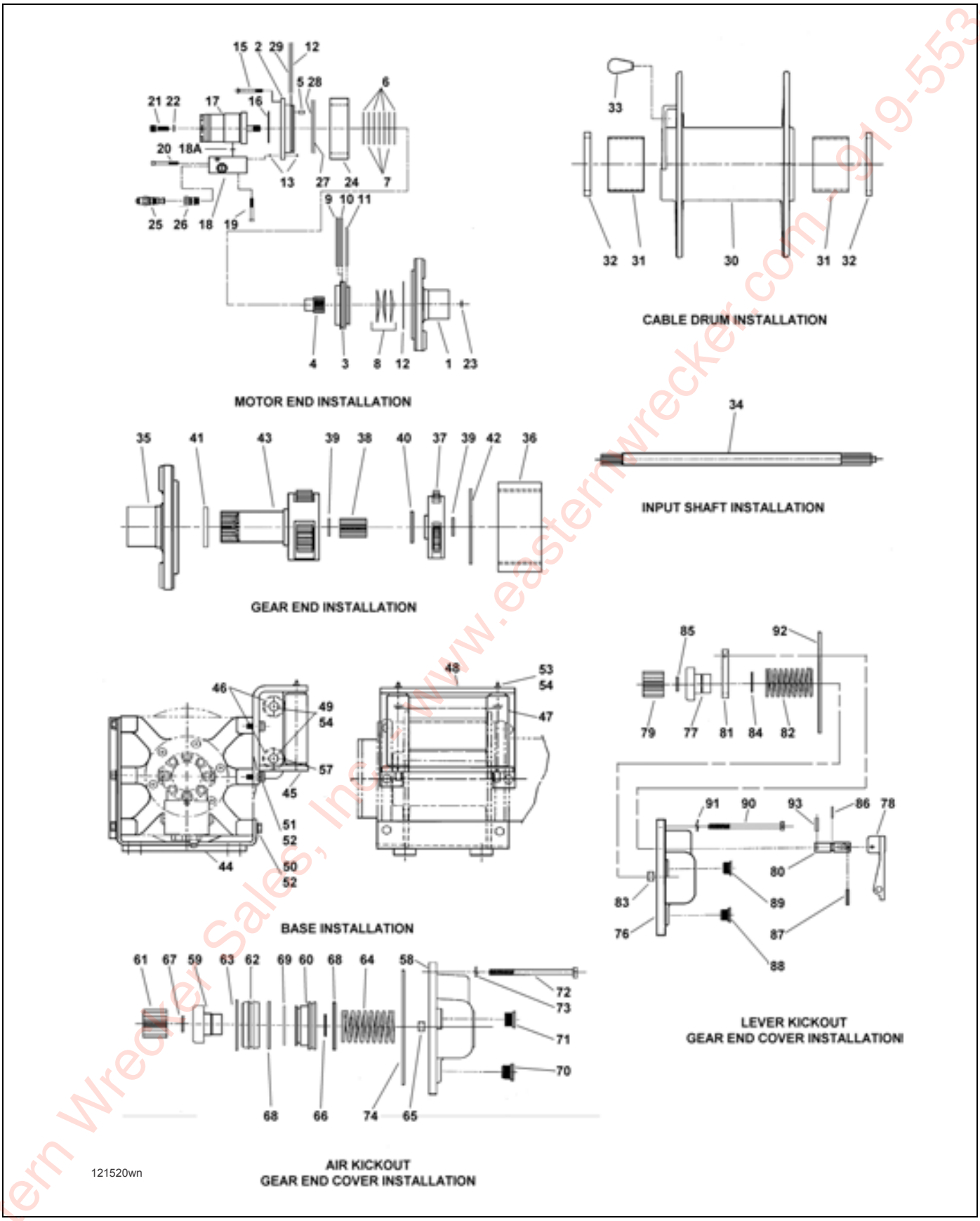

Figure 2-108: 12K, 15K, & 20K Winch Items (DP Planetary)

Eastern Wrecker Sales, Inc. www.easternwrecker.com 919-553-4038

12K, 15K, & 20K WINCH ITEMS (DP PLANETARY)

ITEM	PART NO.	REFERENCE NO.	DESCRIPTION	QTY.
	111091		WINCH DP 12K MANUAL	
	111092		WINCH DP 12K AIR	
	111093		WINCH DP 15K MANUAL	
	111094		WINCH DP 15K AIR	
	111095		WINCH DP 20K MANUAL	
	111096		WINCH DP 20K AIR	
			MOTOR END INSTALLATION	
1	-----	13620	SUPPORT, MOTOR END	1
2	-----	13602	ADAPTER, MOTOR	1
3	-----	13603	PISTON, BRAKE	1
4	-----	13601	SHAFT, BRAKE	1
5	-----	3437	PIN, DOWEL - 3/8 X 5/8	3
6	-----	13035	PLATE, FRICTION - BRAKE	4
7	-----	13034	PLATE, STATIONARY - BRAKE	3
8	-----	3607	SPRING	3
9	-----	9851	O-RING	1
10	-----	9852	RING, BACKUP	1
11	-----	9709	O-RING	1
12	137424	9843	O-RING	2
13	137425	9612	O-RING	2
14	-----	3440	PLUG, EXPANDER (NOT SHOWN)	2
15	180586	4346-8	CAP SCREW, SKT HEAD FL 3/8NC X 3 GR8	6
16	141547	9637	O-RING	1
17	-----		MOTOR, HYDRAULIC (12K)	
	112641	73216	MOTOR, HYDRAULIC (15K)	1
	176681	73218	MOTOR, HYDRAULIC (20K)	1
18	13894	13894	VALVE ASSEMBLY, COUNTERBALANCE	1
18A	141456	9821	O-RING	2
19	180585	1167	CAP SCREW SOCKET HEAD 5/16-18 X 2	4
20	180584	4076	CAP SCREW SOCKET HEAD 1/4-20 X 4-1/2	1
21	172903	1454	CAP SCREW SOCKET HEAD 1/2-13 X 1-1/4	2
22	-----	1144	WASHER LOCK 1/2 HI COLLAR	2
23	-----	3460	RING, RETAINER 3/4 X .035T	2
24	-----	13621	SLEEVE, ADAPTER	1
25	70040	70040	CARTRIDGE	1
26	70042	70042	PLUG, SUN	1
27	137426	9600	O-RING	1
28	137427	9711	RING, BACKUP	1
29	137428	9846	RING, BACKUP	1
			CABLE DRUM INSTALLATION	
30	-----	12401	DRUM	1
31	-----	11947	BEARING - BRONZE	2
32	-----	9929	SEAL SHAFT	2
33	156528	10529	CLIP - CABLE 7/16	1
			INPUT SHAFT INSTALLATION	
34	-----	13678	INPUT SHAFT	4

Eastern Wrecker Sales, Inc. - www.easternwrecker.com - 919-553-4038

12K, 15K, & 20K WINCH ITEMS (DP PLANETARY)

ITEM	PART NO.	REFERENCE NO.	DESCRIPTION	QTY.
			GEAR END INSTALLATION	
35	-----	13605	SUPPORT, END GEAR	1
36	-----	81107	GEAR - RING	1
37	-----	3412	CARRIER, PRIMARY	1
38	-----	13380	GEAR, SUN	1
39	-----	13385	WASHER, THRUST	2
40	-----	12083	WASHER, THRUST NYLON J	1
41	-----	13164	WASHER, THRUST NYLON	1
42	-----	9897	O-RING	1
43	-----	13379	CARRIER ASSEMBLY, SECONDARY	1
			BASE MOUNT INSTALLATION	
44	-----	13599	BASE, MOUNTING	1
45	-----	13746	BRACKET, MOUNTING	1
46	-----	13400	ROLLER, VERTICAL	2
47	-----	12048	ROLLER, VERTICAL BUMPER	2
48	-----	12043	SHAFT, ROLLER VERTICAL, BUMPER	2
49	-----	13403	SHAFT ROLLER VERTICAL 7/8 X 9-3/8	2
50	-----	1401	CAP SCREW, HEX HEAD 1/2-13NC X 1	8
51	-----	1402	CAP SCREW, HEX HEAD 1/2-13NC X 1-1/4	4
52	-----	1495	WASHER, LOCK 1/2	12
53	-----	1000	FITTING, GREASE STR 1/8	4
54	-----	81611	BUSHING, BRONZE	8
55	-----	12113	PLATE, ID WINCH (NOT SHOWN)	1
56	-----	1165	RIVET, TYPE U (NOT SHOWN)	4
57	-----	3456	PIN, SPRING 3/16 X 13/16	4
			GEAR END COVER INSTALLATION - AIR KICKOUT	
58	-----	13370	COVER, GEAR END	1
59	-----	13372	COUPLING, DRIVE	1
60	-----	13373	PISTON - AKO	1
61	-----	13386	GEAR, SUN	1
62	-----	13296	CYLINDER, PISTON	1
63	-----	3632	RING, RETAINING ROUND	1
64	-----	2309	SPRING, COMPRESSION	1
65	-----	81612	BUSHING, BRONZE	1
66	-----	3303	RING, RETAINER	1
67	-----	3321	RING, RETAINER	1
68	-----	9672	O-RING	2
69	-----	9704	O-RING	1
70	-----	76343	PLUG, SOCKET HEAD MAGNETIC #10	1
71	-----	76344	PLUG, O-RING, SOCKET HEAD 7/8-14	1
72	-----	3004	CAP SCREW, HEX HEAD 5/16-18 X 4-3/4	8
73	132106	1168	WASHER, LOCK 5/16	8
74	-----	9897	O-RING	1
75	-----	1157	CAPLUG (NOT SHOWN)	1

Eastern Wrecker Sales, Inc. - www.easternwrecker.com - 919-553-4038

12K, 15K, & 20K WINCH ITEMS (DP PLANETARY)

ITEM	PART NO.	REFERENCE NO.	DESCRIPTION	QTY.
			GEAR END COVER INSTALLATION - LEVER KICKOUT	
76	-----	14182	COVER, GEAR END	1
77	-----	13372	COUPLING, DRIVE	1
78	-----	14099	LEVER, KICKOUT	1
79	-----	13386	GEAR, SUN	1
80	-----	14181	SHAFT, SIFTER	1
81	-----	14183	YOKE, OVAL SHIFT	1
82	-----	2309	SPRING, COMPRESSION	1
83	-----	81612	BUSHING, BRONZE	1
84	-----	3303	RING, RETAINER	1
85	-----	3321	RING, RETAINER	1
86	-----	9739	O-RING	1
87	-----	3705	PIN, SPRING 3/16 X 1-1/9	1
88	-----	76343	PLUG, SOCKET HEAD MAGNETIC #10	1
89	-----	76344	PLUG, O-RING, SOCKET HEAD 7/8-14	1
90	-----	3004	CAP SCREW, HEX HEAD 5/16-18 X 4-3/4	8
91	132106	1168	WASHER, LOCK 5/16	8
92	-----	9897	O-RING	1
93	-----	3456	PIN, SPRING 3/16 X 13/16	1

NOTE: WHEN ORDERING WINCH PARTS, CUSTOMER MUST GIVE SERIAL NO. FOR WINCH. SERIAL NO. IS LOCATED ON SERIAL NO. TAG ON WINCH BASE AND STAMPED INTO TOP OF MOTOR END SUPPORT.

Eastern Wrecker Sales, Inc. - www.easternwrecker.com - 919-553-4038

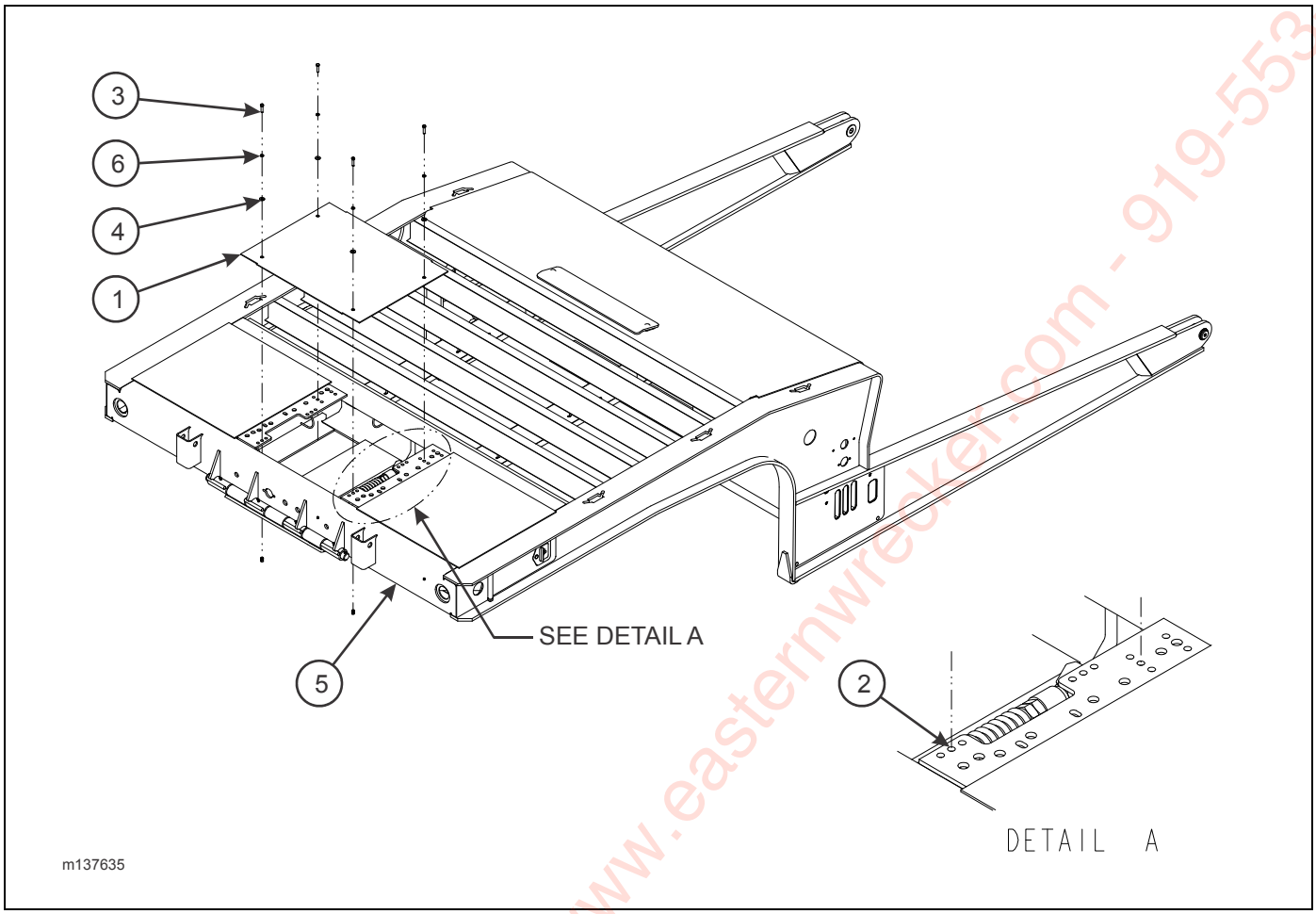

Figure 2-109: Upper Deck Cover Assembly (Option)

UPPER DECK COVER ASSEMBLY (OPTION)

ITEM	PART NO.	DESCRIPTION	QTY.
	137635	COVER ASSEMBLY, UPPER DECK	
1	137634	COVER, UPPER DECK	1
2	139254	NUTSERT, 3/8-16	4
3	1-654-010051-07	SCREW, HEX HEAD CAP 3/8-16 X 1-1/2 GR5	4
4	1-861-010032-11	WASHER, FLAT 3/8W	4
5	130552	FRAME ASSEMBLY, GOOSENECK	REF
6	1-861-010034-11	WASHER, SPLIT LOCK 3/8	4
7	1-007-010025	PLUG, O-RING BOSS 3/4-16 (NOT SHOWN)	1

Eastern Wrecker Sales, Inc. www.easternwrecker.com - 919-553-4038

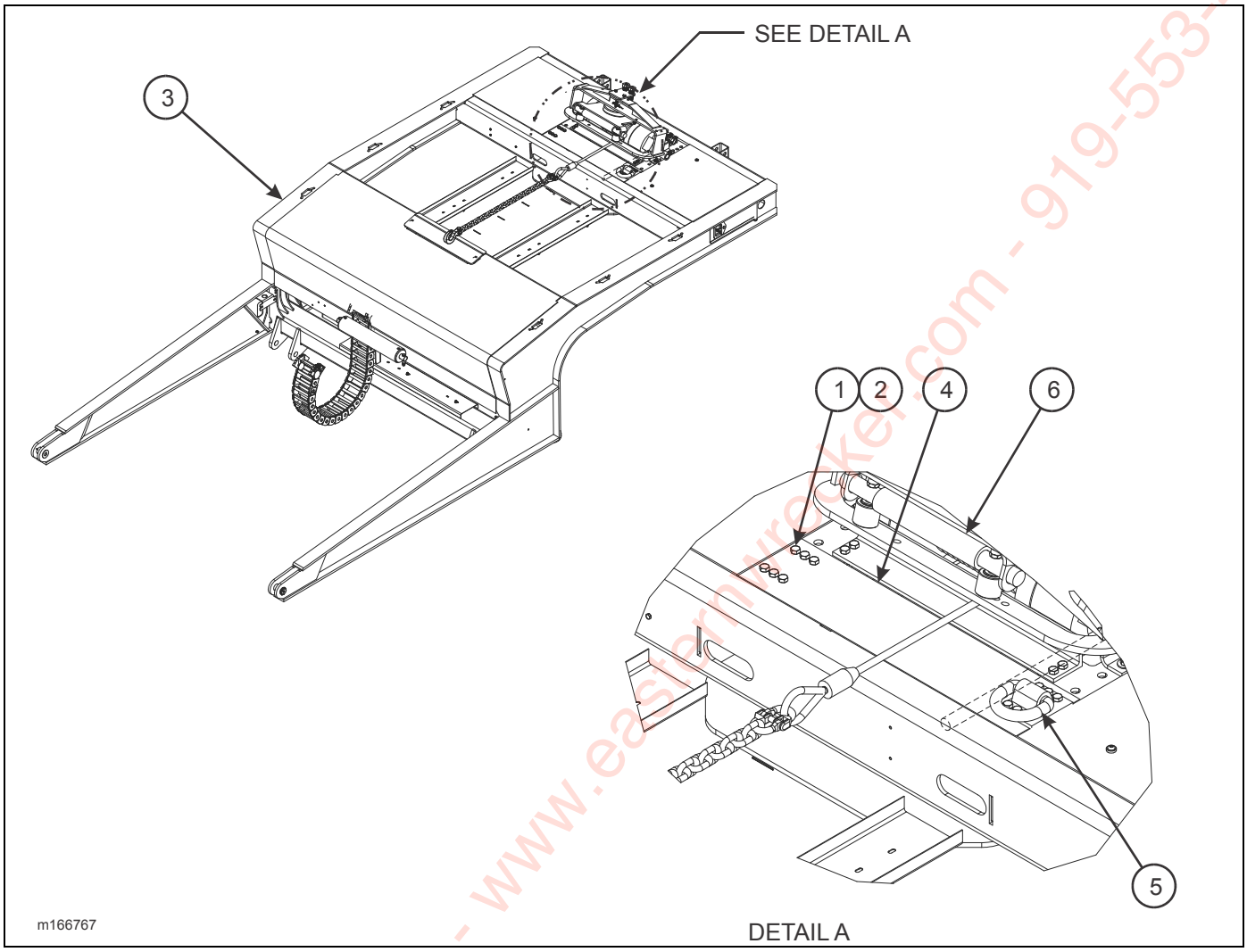

Figure 2-110: Winch Trim Plate Installation (Option)

WINCH TRIM PLATE INSTALLATION (OPTION)

ITEM	PART NO.	DESCRIPTION	QTY.
	166767	WINCH TRIM PLATE INSTALLATION	
1	1-512-010005-09	NUT, HEX LOCK 1/2-13 GRB	6
2	1-654-010055-03	SCREW, HEX HEAD CAP 1/2-13 X 1-1/2 GR5	6
3	-----	FRAME ASSEMBLY, G/N	REF
4	166768	PLATE, WINCH TRIM 20K	1
5	3-793-010040	TIE DOWN, WINCH	REF
6	3-873-010140	WINCH INSTALLATION, 20K UPPER DECK	REF

Eastern Wrecker Sales, Inc. - www.easternwrecker.com - 919-553-4038

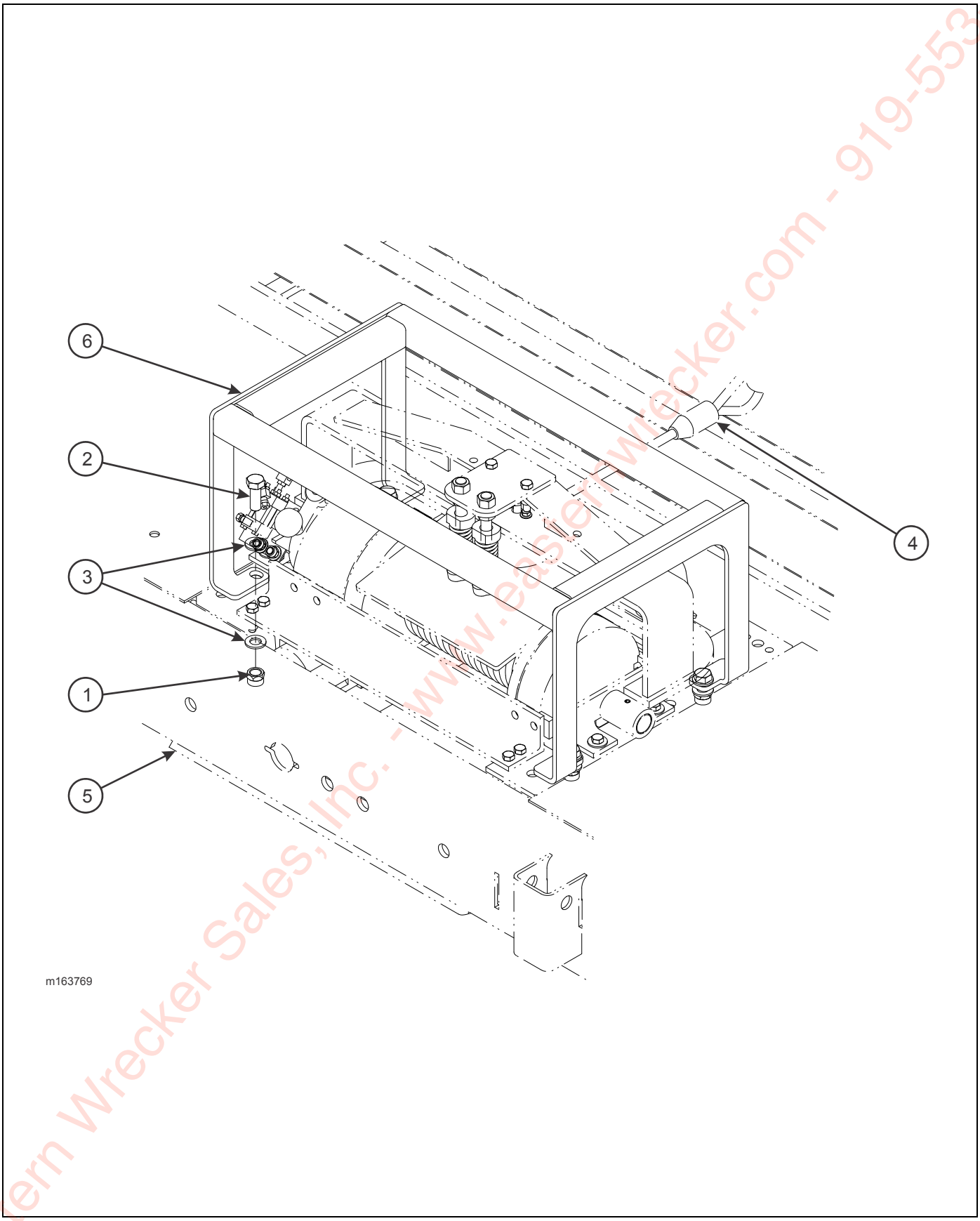

Figure 2-111: Winch Guard Installation, 20K Pivot (Option)

Eastern Wrecker Sales, Inc. - www.easternwrecker.com - 919-553-4038

WINCH GUARD INSTALLATION, 20K PIVOT (OPTION)

ITEM	PART NO.	DESCRIPTION	QTY.
	163769	WINCH GUARD INSTALLATION, 20K PIVOT	
1	1-512-010005-15	NUT, HEX LOCK 3/4-10 GRB	4
2	1-654-010061-05	SCREW, HEX HEAD CAP 3/4-10 X 2 GR5	4
3	1-861-010032-20	WASHER, FLAT, 3/4N	8
4	-----	WINCH ASSEMBLY, 20K GUIDE AIR TEN/REL	REF
5	-----	GOOSENECK WELDMENT	REF
6	163770	GUARD WELDMENT, WINCH 20K PIVOT	1

Eastern Wrecker Sales, Inc. - www.easternwrecker.com - 919-553-4038

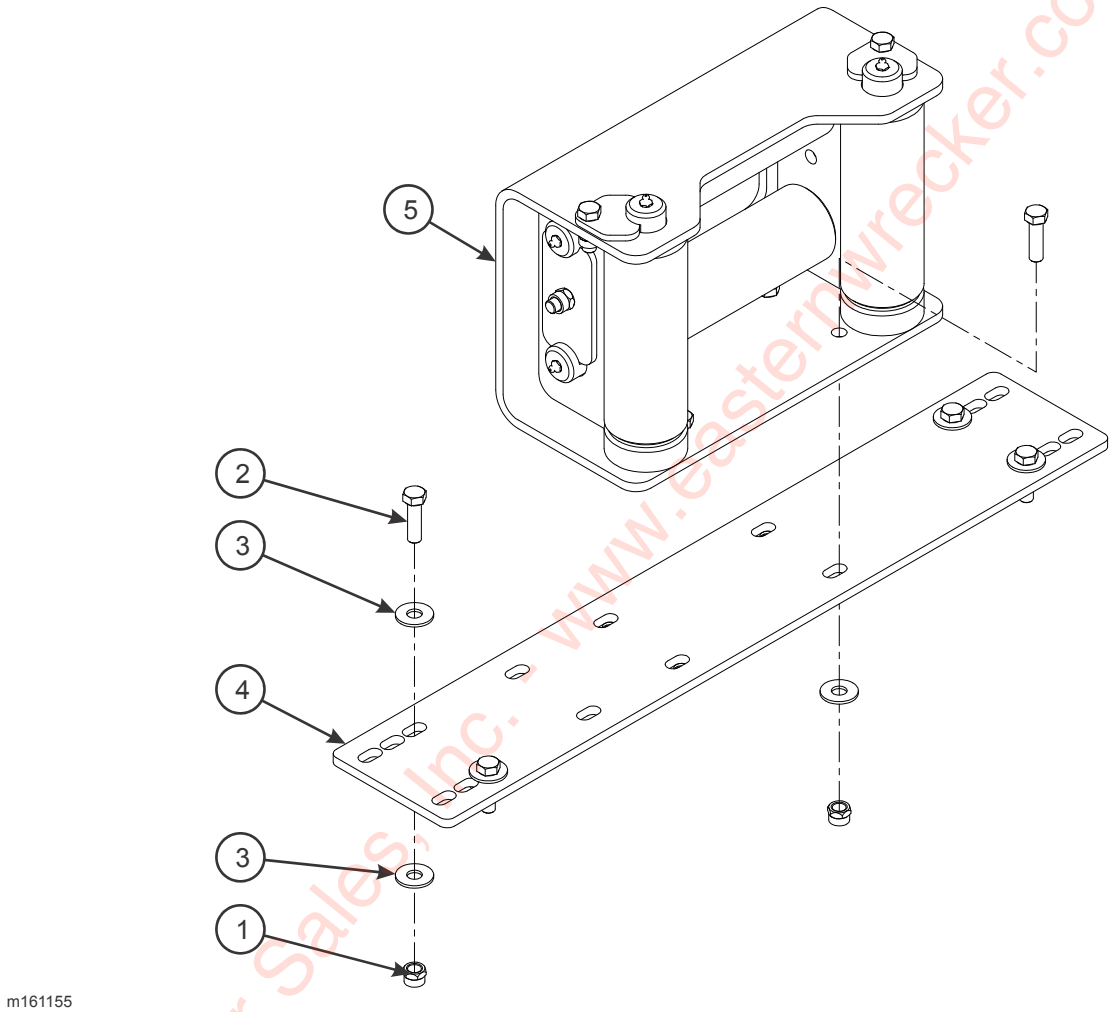

Figure 2-112: 4 Roller Guide Installation (12K Braden) (Option)

Eastern Wrecker Sales, Inc. - www.easternwrecker.com - 919-553-4038

4 ROLLER GUIDE INSTALLATION (12K BRADEN) (OPTION)

ITEM	PART NO.	DESCRIPTION	QTY.
	161155	4 ROLLER GUIDE INSTALLATION (12K BRADEN)	
1	1-512-010005-09	NUT, HEX LOCK 1/2-13 GRB	8
2	1-654-010055-04	SCREW, HEX HEAD CAP 1/2-13 X 1-3/4 GR5	8
3	1-861-010032-15	WASHER, FLAT 1/2W	12
4	145588	PLATE, ROLLER GUIDE MOUNT	1
5	161150	GUIDE ASSEMBLY, WINCH 12K BRADEN (SEE PAGE 2-211)	1

Eastern Wrecker Sales, Inc. - www.easternwrecker.com - 919-556-4038

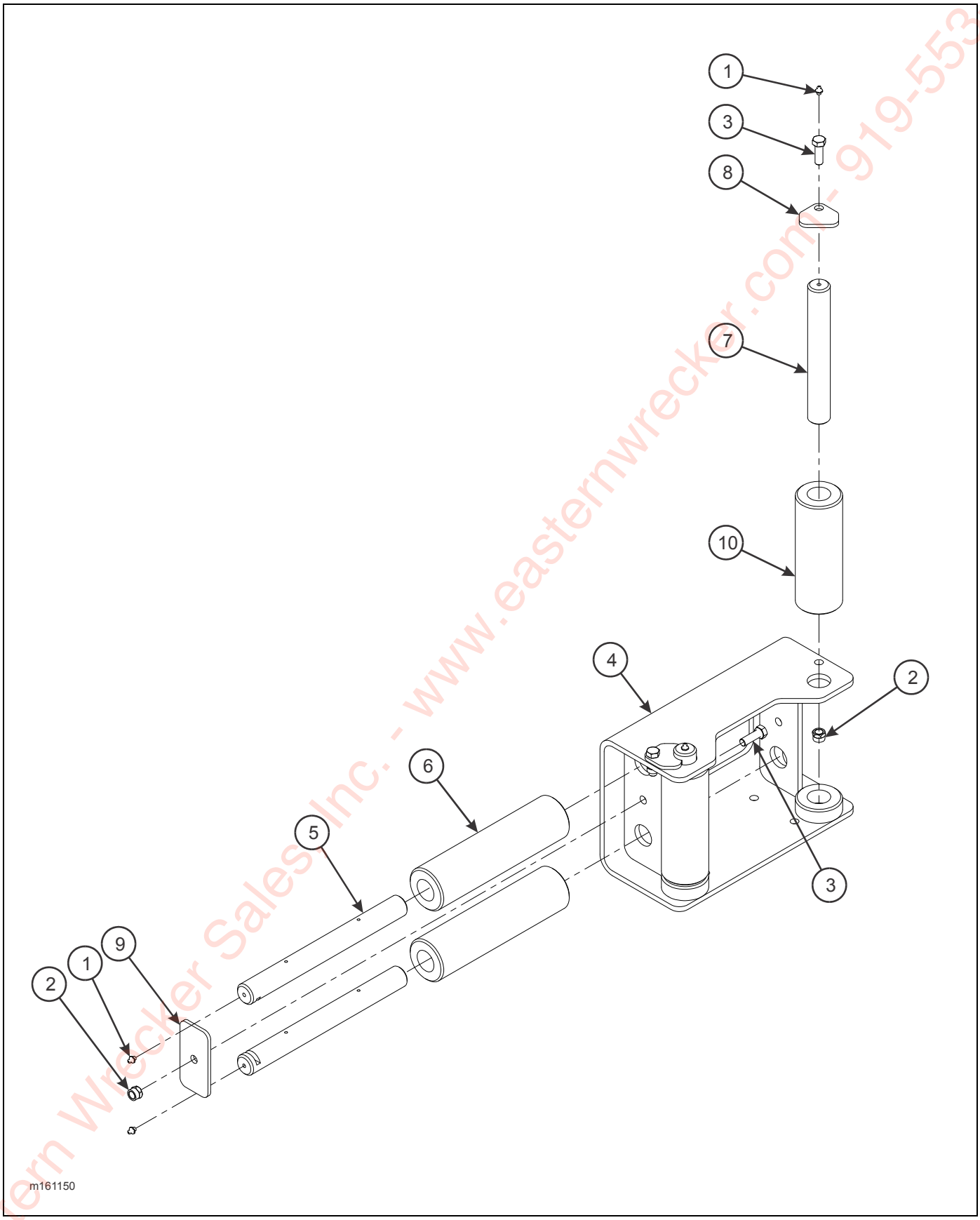

Figure 2-113: Guide Assembly, Winch 12K (Braden) (Option)

Eastern Wrecker Sales Inc. - www.easternwrecker.com - 919-553-4038

GUIDE ASSEMBLY, WINCH 12K (BRADEN) (OPTION)

ITEM	PART NO.	DESCRIPTION	QTY.
	161150	GUIDE ASSEMBLY, WINCH 12K (BRADEN)	
1	1-298-010001-1	FITTING, GREASE STR SHORT 1/4-28	6
2	1-512-010005-09	NUT, HEX LOCK 1/2-13 GRB	11
3	1-654-010055-03	SCREW, HEX HEAD CAP 1/2-13 X 1-1/2 GR5	3
4	161151	BRACKET WELDMENT, WINCH GUIDE	1
5	161153	PIN, HORIZONTAL ROLLER GUIDE	2
6	161154	ROLLER, HORIZONTAL WINCH GUIDE	2
7	3-557-010543	PIN, VERTICAL ROLLER 20K GUIDE	2
8	3-565-011792	PLATE, GUIDE LOCK TOP	2
9	3-565-011793	PLATE, GUIDE LOCK SIDE	1
10	3-645-010087	ROLLER, VERTICAL 20K WINCH GUIDE	2

Eastern Wrecker Sales, Inc. - www.easternwrecker.com - 919-553-4038

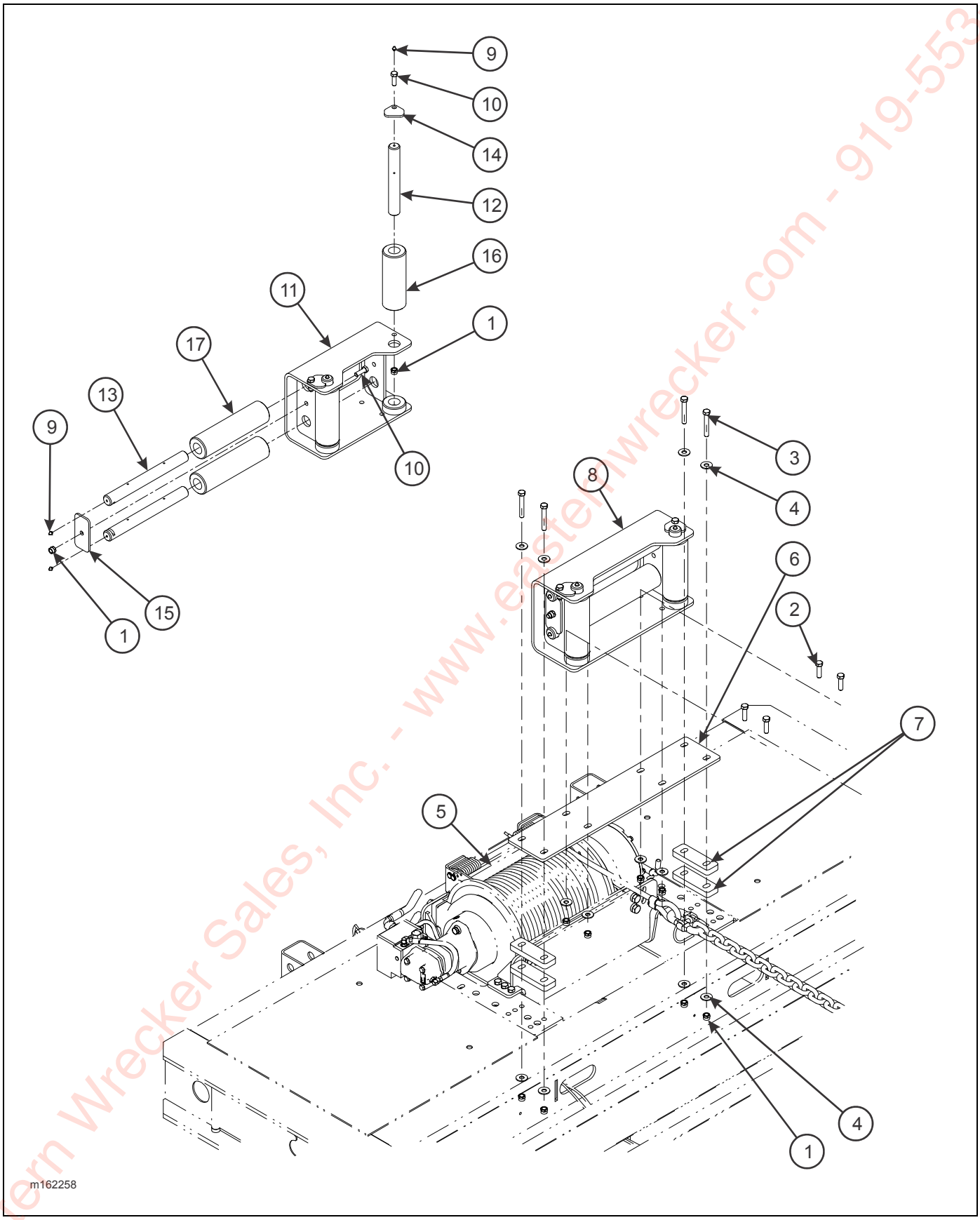

Figure 2-114: 4 Roller Guide Installation (Warn) (Option)

Eastern Wrecker Sales, Inc. - www.easternwrecker.com - 919-553-4038

4 ROLLER GUIDE INSTALLATION (WARN) (OPTION)

ITEM	PART NO.	DESCRIPTION	QTY.
	162258	4 ROLLER GUIDE INSTALLATION (WARN)	
1	1-512-010005-09	NUT, HEX LOCK 1/2-13 GRB	11
2	1-654-010055-04	SCREW, HEX HEAD CAP 1/2-13 X 1-1/2 GR5	4
3	1-654-010055-10	SCREW, HEX HEAD CAP 1/2-13 X 3-1/4 GR5	4
4	1-861-010032-15	WASHER, FLAT 1/2W	12
5	151818	WINCH INSTALLATION, 20K WARN (SEE PAGE 2-131)	REF
	155411	WINCH INSTALLATION, 30K WARN (SEE PAGE 2-143)	REF
6	162259	PLATE, ROLLER GUIDE	1
7	162260	PLATE, ROLLER SPACER	4
8	3-352-010067-2	GUIDE ASSEMBLY, WINCH (INCL ITEMS 1, 9-17)	1
9	1-298-010001-1	FITTING, GREASE STR SHORT 1/4-28	6
10	1-654-010055-03	SCREW, HEX HEAD CAP 1/2-13 X 1-1/2 GR5	3
11	3-120-010494	BRACKET WELDMENT, 20K WINCH GUIDE	1
12	3-557-010543	PIN, VERTICAL ROLLER 20K GUIDE	2
13	3-557-010544	PIN, HORIZONTAL ROLLER 20K GUIDE	2
14	3-565-011792	PLATE, GUIDE LOCK TOP	2
15	3-565-011793	PLATE, GUIDE LOCK SIDE	1
16	3-645-010087	ROLLER, VERTICAL 20K WINCH GUIDE	2
17	3-645-010088	ROLLER, HORIZONTAL 20K WINCH GUIDE	2

Eastern Wrecker Sales, Inc. - www.easternwrecker.com - 919-553-4038

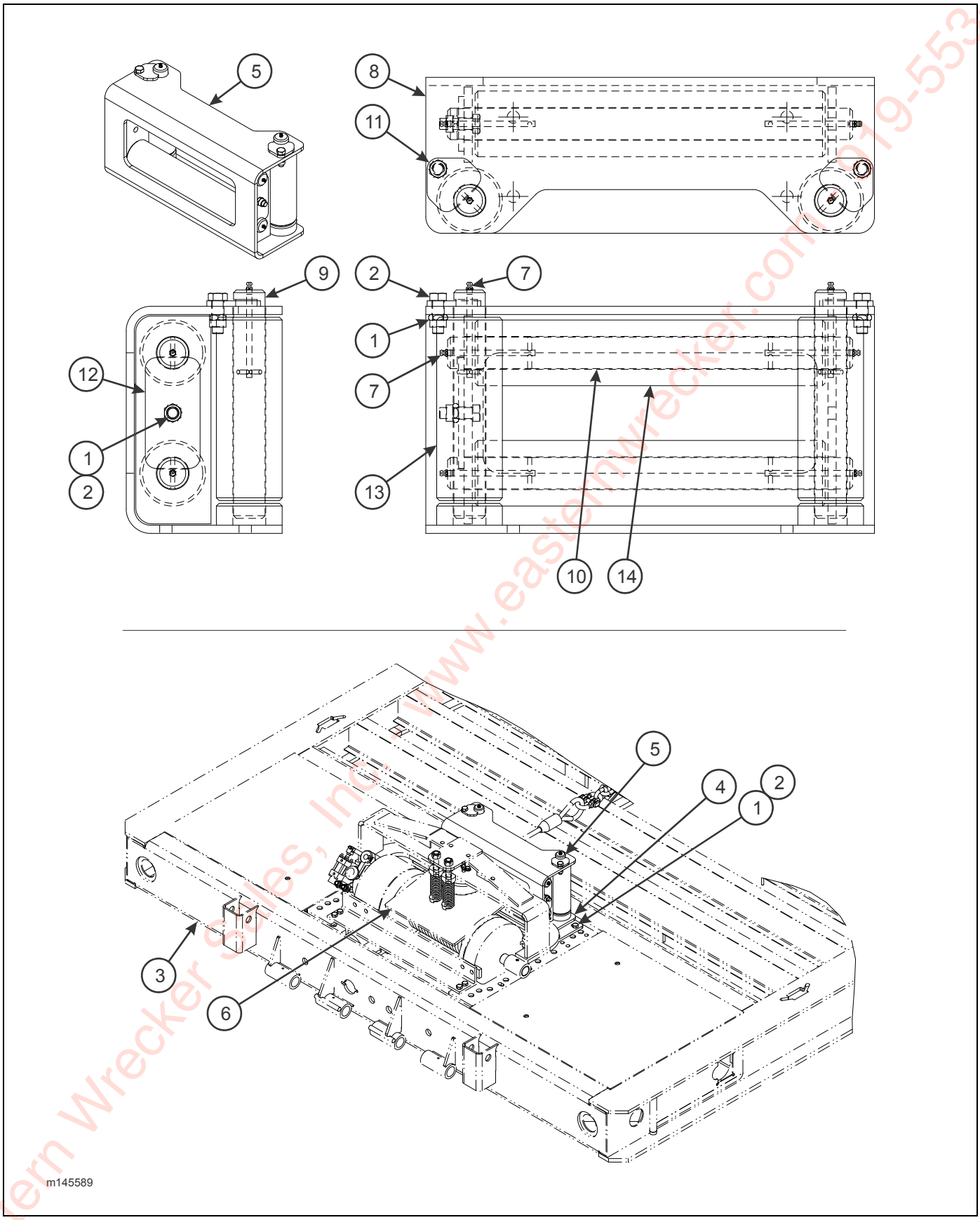

Figure 2-115: 4 Roller Guide Installation (Option)

Eastern Wrecker Sales, Inc. www.easternwrecker.com 919-553-4038

4 ROLLER GUIDE INSTALLATION (OPTION)

ITEM	PART NO.	DESCRIPTION	QTY.
	145589	4 ROLLER GUIDE INSTALLATION	
1	1-512-010005-09	NUT, HEX LOCK 1/2-13 GRB	11
2	1-654-010055-03	SCREW, HEX HEAD CAP 1/2-13 X 1-1/2 GR5	11
3	130662	GOOSENECK WELDMENT	REF
4	145588	PLATE, ROLLER GUIDE MOUNT	1
5	3-352-010067-2	GUIDE ASSEMBLY, WINCH (INCL ITEMS 1-2, 7-14)	1
6	3-873-010140	WINCH INSTALLATION, 20K UPPER DECK	REF
7	1-298-010001-1	FITTING, GREASE STR SHORT 1/4-28	6
8	3-120-010494	BRACKET WELDMENT, 20K WINCH GUIDE	1
9	3-557-010543	PIN, VERTICAL ROLLER 20K GUIDE	2
10	3-557-010544	PIN, HORIZONTAL ROLLER 20K GUIDE	2
11	3-565-011792	PLATE, GUIDE LOCK TOP	2
12	3-565-011793	PLATE, GUIDE LOCK SIDE	1
13	3-645-010087	ROLLER, VERTICAL 20K WINCH GUIDE	2
14	3-645-010088	ROLLER, HORIZONTAL 20K WINCH GUIDE	2

Eastern Wrecker Sales, Inc. - www.easternwrecker.com - 919-553-4038

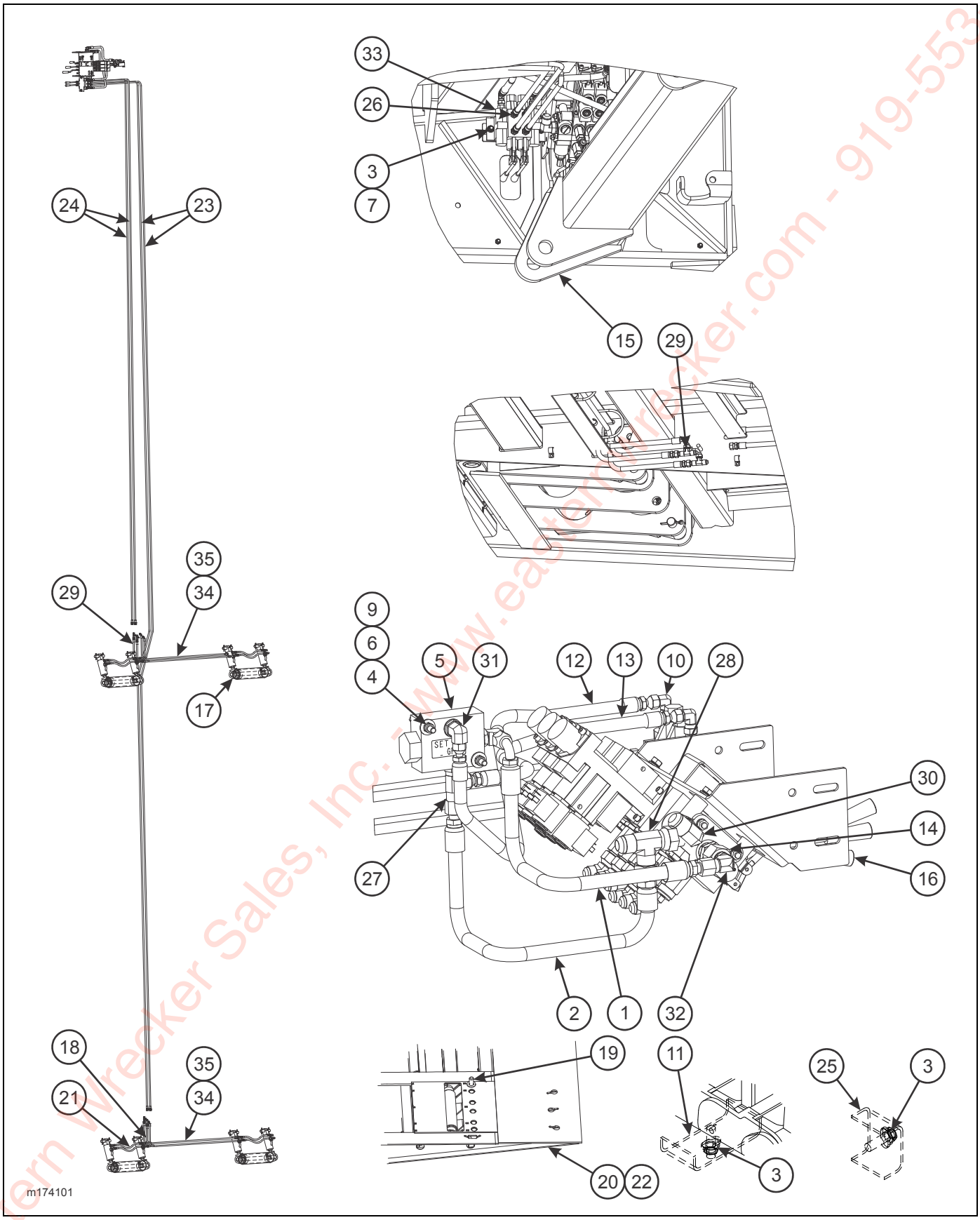

Figure 2-116: 4 Pop-Up Roller Installation (Option)

Eastern Wrecker Sales, Inc. - www.easternwrecker.com - 919-553-4038

4 POP-UP ROLLER INSTALLATION (OPTION)

ITEM	PART NO.	DESCRIPTION	QTY.	
	174100	ROLLER INSTALLATION, 4 POP-UP 400-53-120	*	
	174099	ROLLER INSTALLATION, 4 POP-UP 400-53-108		*
1	1-397-010302018	HOSE ASSEMBLY 1/2 X 18	1	1
2	1-397-010306028	HOSE ASSEMBLY 1/2 X 28	1	1
3	1-510-010001	NUT, FLANGE LOCK 3/8-16	16	16
4	1-512-010005-03	NUT, HEX LOCK 5/16-18 GRB	2	2
5	1-626-010002-03	REGULATOR FLOW 1/2 BYPASS ONLY	1	1
6	1-654-010049-11	SCREW, HEX HEAD CAP 5/16-18 X 2-1/2 GR5	2	2
7	1-654-010051-05	SCREW, HEX HEAD CAP 3/8-16 X 1 GR5	2	2
8	1-796-010003-02	TIE, STRAP PLASTIC (NOT SHOWN)	14	14
9	1-861-010032-09	WASHER, FLAT 5/16W	4	4
10	102-0031	ADAPTER, 90	2	2
11	103817	CLAMP, HOSE	7	7
12	111302	HOSE ASSEMBLY 3/8 X 24	1	1
13	116429	HOSE ASSEMBLY 3/8 X 25	1	1
14	138179	POWER BEYOND REMOTE	1	1
15	-----	FRAME ASSEMBLY, G/N	REF	REF
16	-----	VALVE ASSEMBLY, 3 SPOOL	REF	REF
17	169845	POP-UP ROLLER ASSEMBLY (SEE PAGE 2-222) (	4	4
18	169848	HOSE ASSEMBLY 1/4 X 18	4	4
19	169865	PIN WELDMENT, ALIGNMENT PEG	4	4
20	-----	FRAME, MODIFIED 4 ROLLER	-----	REF
21	174265	HOSE, HYDRAULIC 1/4 X 21	8	8
22	-----	FRAME, MOD ROLLER BRAKE	REF	-----
23	176800	HOSE ASSEMBLY 1/4 X 573	2	2
24	176801	HOSE ASSEMBLY 1/4 X 363	2	2
25	2-181-010001	CLAMP	7	7
26	202702-6-6S	ADAPTER STRAIGHT	6	6
27	203005-8-8S	ADAPTER, TEE	1	1
28	203102-12-12S	ADAPTER, TEE	1	1
29	2033-6-6S	ADAPTER, TEE	4	4
30	2062-10-12S	ADAPTER, 90°	REF	REF
31	2062-8-6S	ADAPTER, 90°	1	1
32	2062-8-8S	ADAPTER, 90°	2	2
33	3-846-010056	VALVE, DOUBLE SPOOL STACK (SEE PAGE 2-247), PRIOR TO 01/15/2014	1	1
	179649	VALVE, DOUBLE SPOOL, AFTER 01/15/2015		
34	71500166	HOSE, HYDRAULIC 1/4 X 52	--	4
35	71509010	HOSE, HYDRAULIC 1/4 X 64	4	--

Eastern Wrecker Sales, Inc. - www.easternwrecker.com - 919-553-4038

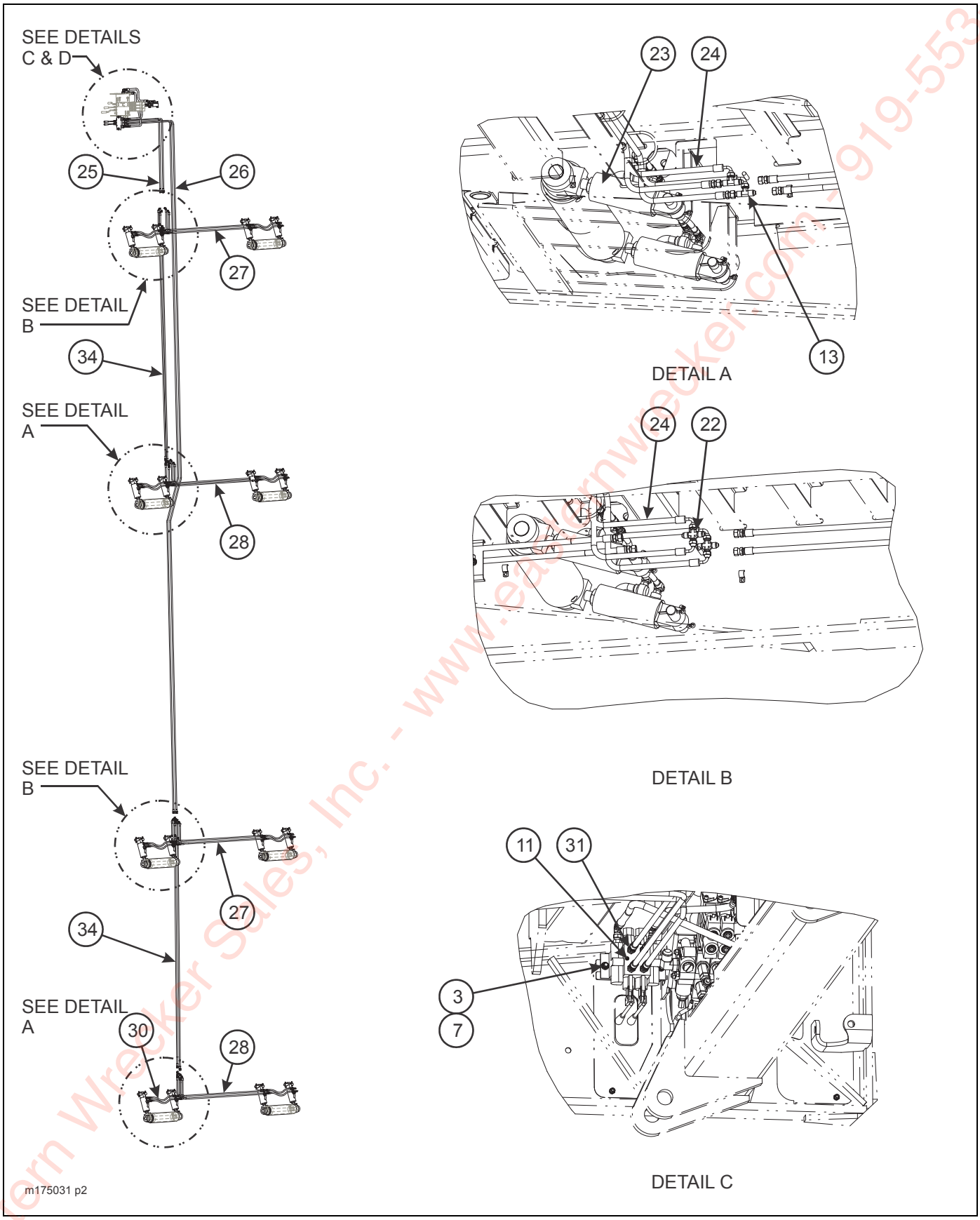

Figure 2-117: 8 Pop-Up Roller Installation (Option) (1 of 2)

Eastern Wrecker Sales, Inc. - www.easternwrecker.com - 919-553-4038

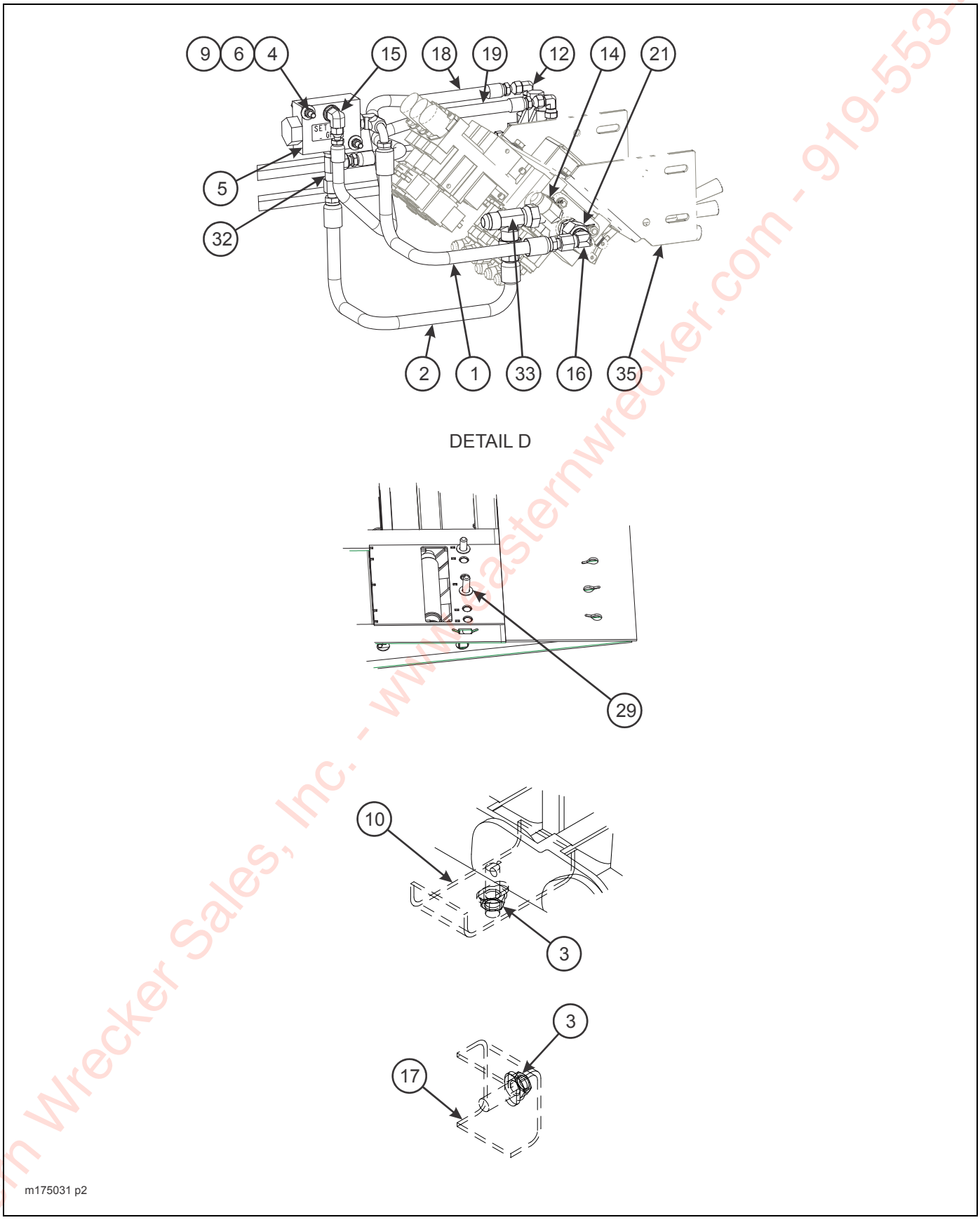

Figure 2-118: 8 Pop-Up Roller Installation (Option) (2 of 2)

Eastern Wrecker Sales, Inc. - www.easternwrecker.com - 919-553-4038

8 POP-UP ROLLER INSTALLATION (OPTION)

ITEM	PART NO.	DESCRIPTION	QTY.					
	175033	ROLLER INST., 8 POP-UP 400-53-120 (LG. BRK)	*					
	175030	ROLLER INST., 8 POP-UP 400-53-108 (SM. & LG. BRK)		*				
	175640	ROLLER INST., 8 POP-UP 400-53-102 (SM. BRK)			*			
	178342	ROLLER INST., 8 POP-UP 400-50CA-102 (SM. BRK)				*		
	178401	ROLLER INST., 8 POP-UP 400-53-120 (SM. BRK)					*	
	179606	ROLLER INST., 8 POP-UP 400-53-102 (LG. BRK)						
1	1-397-010302018	HOSE ASSEMBLY 1/2 X 18	1	1	1	1	1	1
2	1-397-010306028	HOSE ASSEMBLY 1/2 X 28	1	1	1	1	1	1
3	1-510-010001	NUT, FLANGE LOCK 3/8-16	16	16	16	16	16	16
4	1-512-010005-03	NUT, HEX LOCK 5/16-18 GRB	2	2	2	2	2	2
5	1-626-010002-03	REGULATOR FLOW 1/2 BYPASS ONLY	1	1	1	1	1	1
6	1-654-010049-11	SCREW, HEX HEAD CAP 5/16-18 X 2-1/2 GR5	2	2	2	2	2	2
7	1-654-010051-05	SCREW, HEX HEAD CAP 3/8-16 X 1 GR5	2	2	2	2	2	2
8	1-796-010003-02	TIE, STRAP PLASTIC (NOT SHOWN)	14	14	14	14	14	14
9	1-861-010032-09	WASHER, FLAT 5/16W	4	4	4	4	4	4
10	3-181-010006	HOSE CLAMP	4	4	4	4	4	4
11	3-846-010056	VALVE, DOUBLE SPOOL STACK (SEE PAGE 2-247) PRIOR TO 01/15/2014	1	1	1	1	1	1
	179649	VALVE, DOUBLE SPOOL, AFTER 01/15/2014						
12	102-0031	ADAPTER, 90	2	2	2	2	2	2
13	2033-6-6S	ADAPTER, TEE	4	4	4	4	4	4
14	2062-10-12S	ADAPTER, 90	REF	REF	REF	REF	REF	REF
15	2062-8-6S	ADAPTER, 90°	1	1	1	1	1	1
16	2062-8-8S	ADAPTER, 90°	2	2	2	2	2	2
17	103817	CLAMP, HOSE	10	10	10	10	10	10
18	111302	HOSE ASSEMBLY 3/8 X 24	1	1	1	1	1	1
19	116429	HOSE ASSEMBLY 3/8 X 25	1	1	1	1	1	1
21	138179	POWER BEYOND REMOTE	1	1	1	1	1	1
22	149012	ADAPTER, CROSS	4	4	4	4	4	4
23	169845	POP-UP ROLLER ASSEMBLY (SEE PAGE 2-222)	8	8	--	--	--	8
	175617	POP-UP ROLLER ASSEMBLY (SEE PAGE 2-222)	--	--	8	8	8	--
24	169848	HOSE ASSEMBLY 1/4 X 18	8	8	8	8	8	8
25	169849	HOSE ASSEMBLY 1/4 X 144	2	2	2	--	--	2
	125648	HOSE ASSEMBLY 1/4 X 108	--	--	--	2	--	--
26	174266	HOSE ASSEMBLY, 1/4 X 446	2	2	2	--	--	2
	169852	HOSE ASSEMBLY 1/4 X 416	--	--	--	2	2	--
27	174267	HOSE ASSEMBLY, 1/4 X 64	4	--	--	--	--	--
	175029	HOSE ASSEMBLY, 1/4 X 52	--	4	4	4	--	4
	149011	HOSE ASSEMBLY, 1/4 X 72	--	--	--	--	4	--

Eastern Wacker Sales Inc. - www.easternwacker.com - 919-553-4038

8 POP-UP ROLLER INSTALLATION (OPTION)

ITEM	PART NO.	DESCRIPTION	QTY.					
28	71500166	HOSE, HYDRAULIC 1/4 X 52	--	4	4	4	--	4
	71509010	HOSE, HYDRAULIC 1/4 X 64	4	--	--	--	--	--
	7779-72	HOSE ASSEMBLY, 1/4 X 72	--	--	--	--	4	--
29	169865	PIN WELDMENT, ALIGNMENT PEG	4	4	4	4	4	4
30	174265	HOSE, HYDRAULIC 1/4 X 21	16	16	16	16	16	16
31	202702-6-6S	ADAPTER STRAIGHT	6	6	6	6	6	6
32	203005-8-8S	ADAPTER, TEE	1	1	1	1	1	1
33	203102-12-12S	ADAPTER, TEE	1	1	1	1	1	1
34	71600529	HOSE ASSEMBLY, 1/4 X 120	4	4	4	2	4	4
	149007	HOSE ASSEMBLY 1/4 X 156	--	--	--	2	--	--
35	148241	VALVE ASSEMBLY, 3 SPOOL	REF	REF	REF	REF	REF	REF

Eastern Wrecker Sales, Inc. - www.easternwrecker.com - 919-553-4038

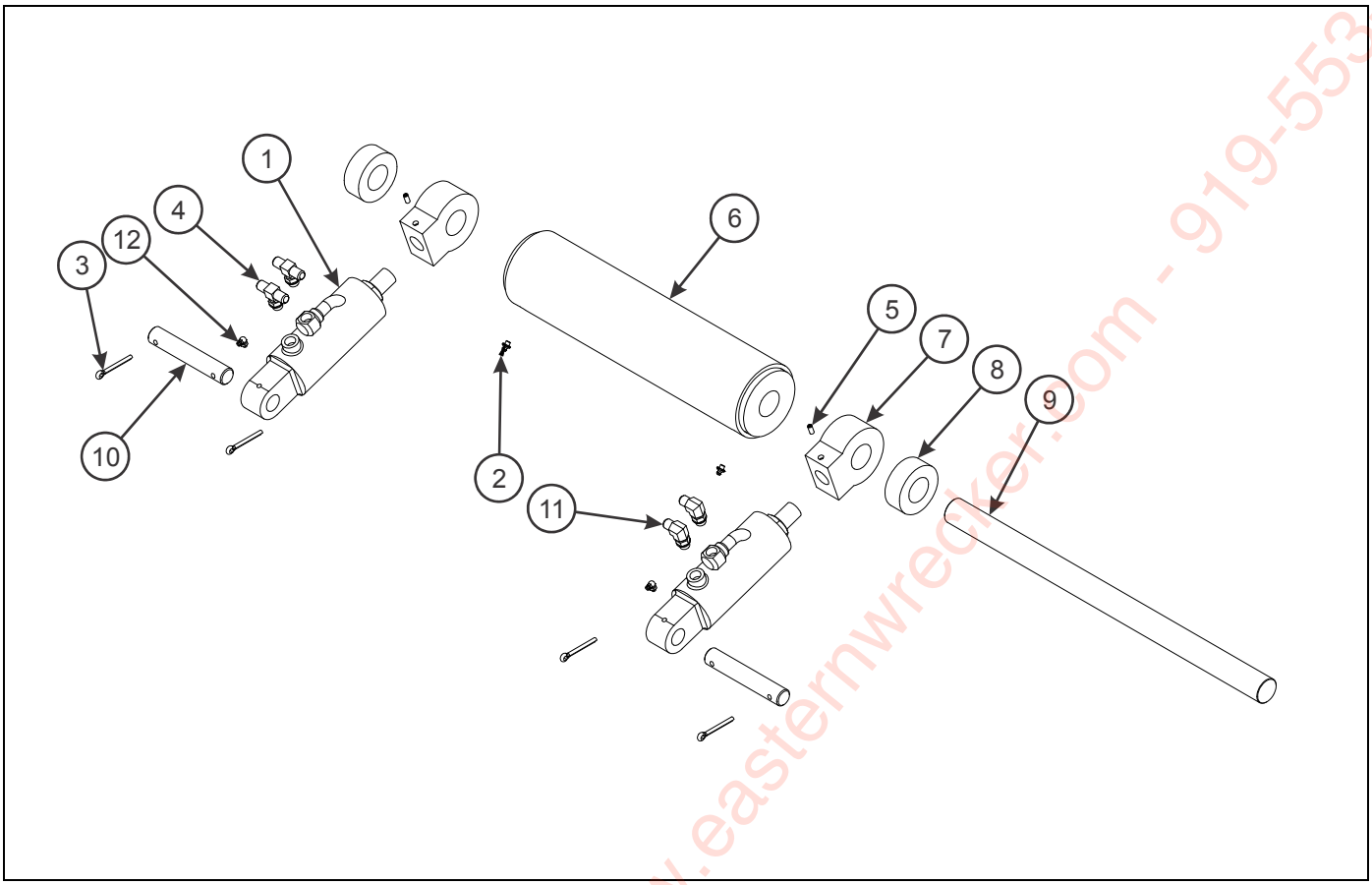

Figure 2-119: Pop-Up Roller Installation (Option)

POP-UP ROLLER INSTALLATION (OPTION)

ITEM	PART NO.	DESCRIPTION	QTY.	
	169845	POP-UP ROLLER INSTALLATION	*	
	175617	POP-UP ROLLER INSTALLATION		*
1	0047008	CYLINDER, TILT (SEE PAGE 2-223)	2	2
2	1-298-010001-1	FITTING, GREASE STR SHORT 1/4-28	2	2
3	1-557-010362-63	PIN, COTTER 1/4 X 2	4	4
4	102-1089	ADAPTER, 90	2	2
5	107464	SCREW, SET HEX SOCKET 1/4-28 X 5/8	2	2
6	161809	ROLLER WELDMENT, CABLE-UPPER DECK (18-3/4")(BEFORE 01/19/2015)	1	--
	187787	ROLLER WELDMENT, HDPU, 18-3/4 (AFTER 01/19/2015)	1	--
	175616	ROLLOUT WELDMENT, POP-UP ROLLER (15-3/4") (BEFORE 1-19-2015)	--	1
	187790	ROLLER WELDMENT, HD PU 15-3/4 (AFTER 1-19-2015)	--	1
7	169255	END CYLINDER, ROLLER PIN	2	2
8	169258	ROLLER, TRACK HYDRAULIC DECK ROLLER	2	2
9	169836	SHAFT, ROLLER POP-UP (24-7/16")	1	--
	175620	SHAFT, ROLLER POP-UP (21-7/16")	--	1
10	2-557-010054	PIN, EXTENDED CYLINDER	2	2
11	2062-6-6S	ADAPTER, 90	2	2
12	5410	FITTING, GREASE 1/4-28 90	2	2

Eastern Wrecker Sales Inc. - www.easternwrecker.com - 919-553-4038

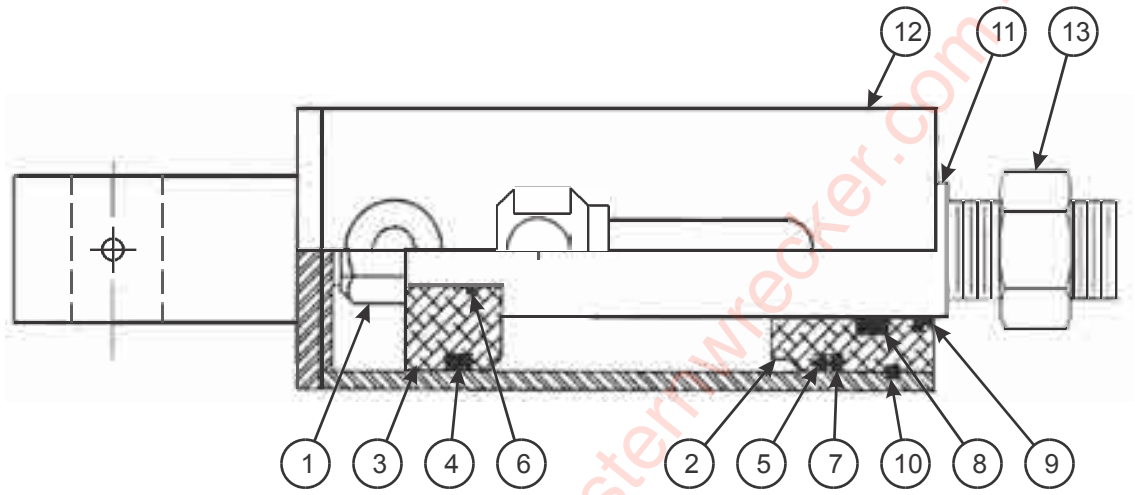

Figure 2-120: Tilt Cylinder (Option)

TILT CYLINDER (OPTION)

ITEM	PART NO.	DESCRIPTION	QTY.
	0047008	CYLINDER, TILT	
1	0047008-01	NUT	1
2	0047008-02	HEAD	1
3	0047008-03	PISTON	1
4	*	PSP SEAL	1
5	*	O-RING	1
6	*	O-RING	1
7	*	BACKUPS	1
8	*	POLY-PAK	1
9	*	DUST SEAL	1
10	0047008-10	RETAINING RING	1
11	0047008-11	SHAFT	1
12	0047008-12	BARREL WITH CLEVIS AND PORTS	1
13	0047008-13	NUT	1
	0047008/RK	REPAIR KIT (INCLUDED ITEMS WITH *)	1

Eastern Wrecker Sales, Inc. - www.easternwrecker.com - 919-553-4038

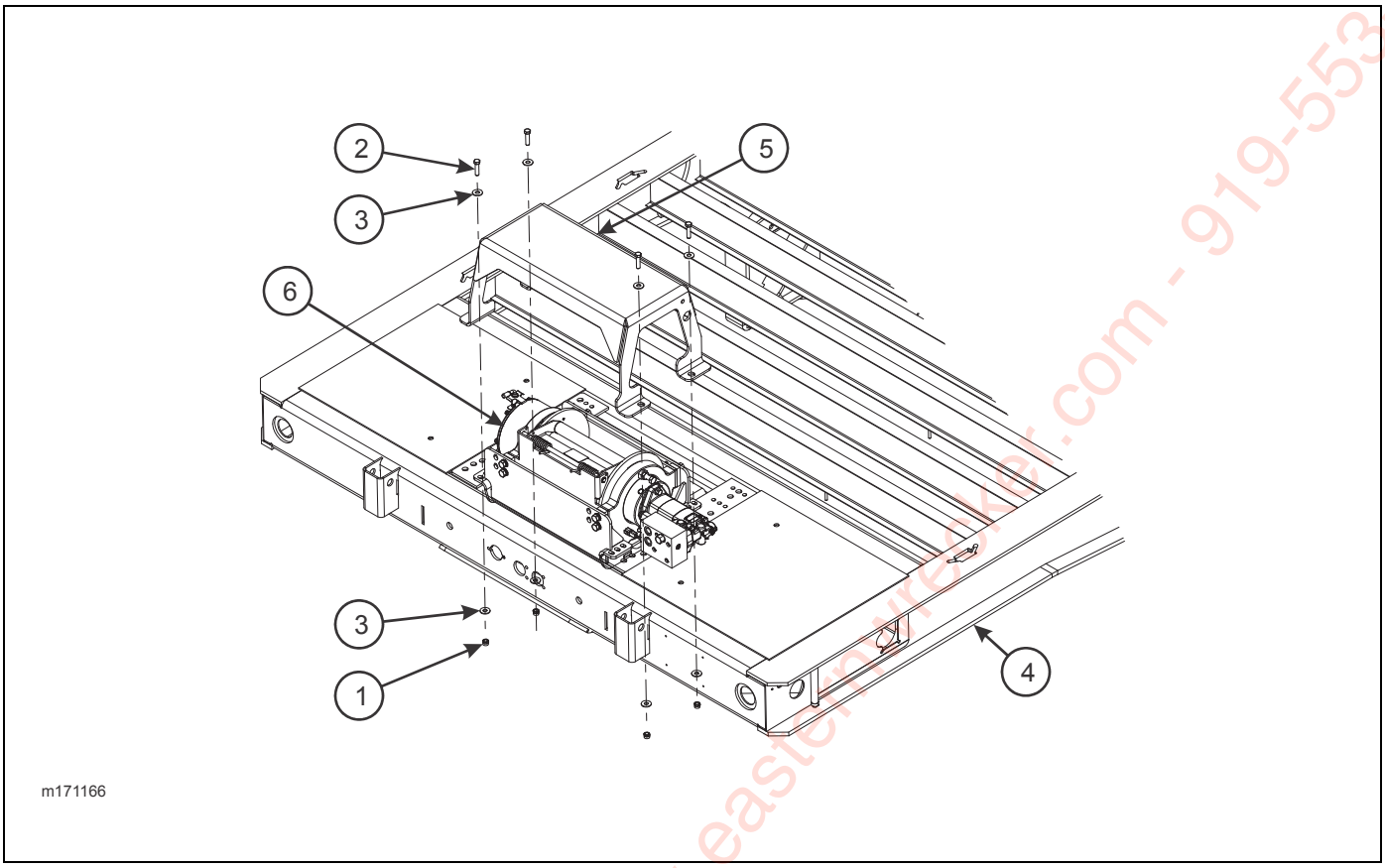

Figure 2-121: Winch Guard Installation for 20K/30K Warn Winch (Option)

WINCH GUARD INSTALLATION FOR 20K/30K WARN WINCH (OPTION)

ITEM	PART NO.	DESCRIPTION	QTY.
	171166	WINCH GUARD INSTALLATION FOR 20K/30K WARN WINCH	
1	1-512-010005-09	NUT, HEX LOCK 1/2-13 GRB	4
2	1-654-010055-05	SCREW, HEX HEAD CAP 1/2-13 X 2 GR5	2
3	1-861-010032-15	WASHER, FLAT 1/2W	6
4	-----	FRAME WELDMENT	REF
5	171167	GUARD WINCH 20K/30K WARN	1
6	-----	WINCH ASSEMBLY, WARN	REF

Eastern Wrecker Sales, Inc. www.easternwrecker.com - 919-553-4038

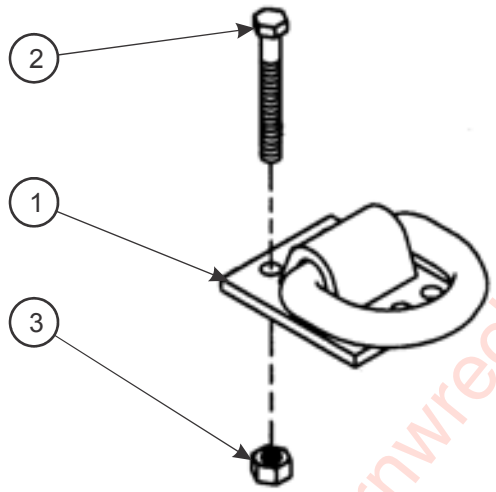

Figure 2-122: Tie Down Installation (Option)

TIE DOWN INSTALLATION (OPTION)

ITEM	PART NO.	DESCRIPTION	QTY.
	3-793-010041	TIE DOWN INSTALLATION WINCH D-RING	
1	3-793-010040	TIE DOWN, WINCH	1
2	1-654-010055-03	SCREW, HEX HEAD CAP 1/2-13 X 1-1/2 GR5	6
3	1-512-010005-09	NUT, HEX LOCK 1/2-13 GRB	6

Eastern Wrecker Sales, Inc. - www.easternwrecker.com - 919-553-4038

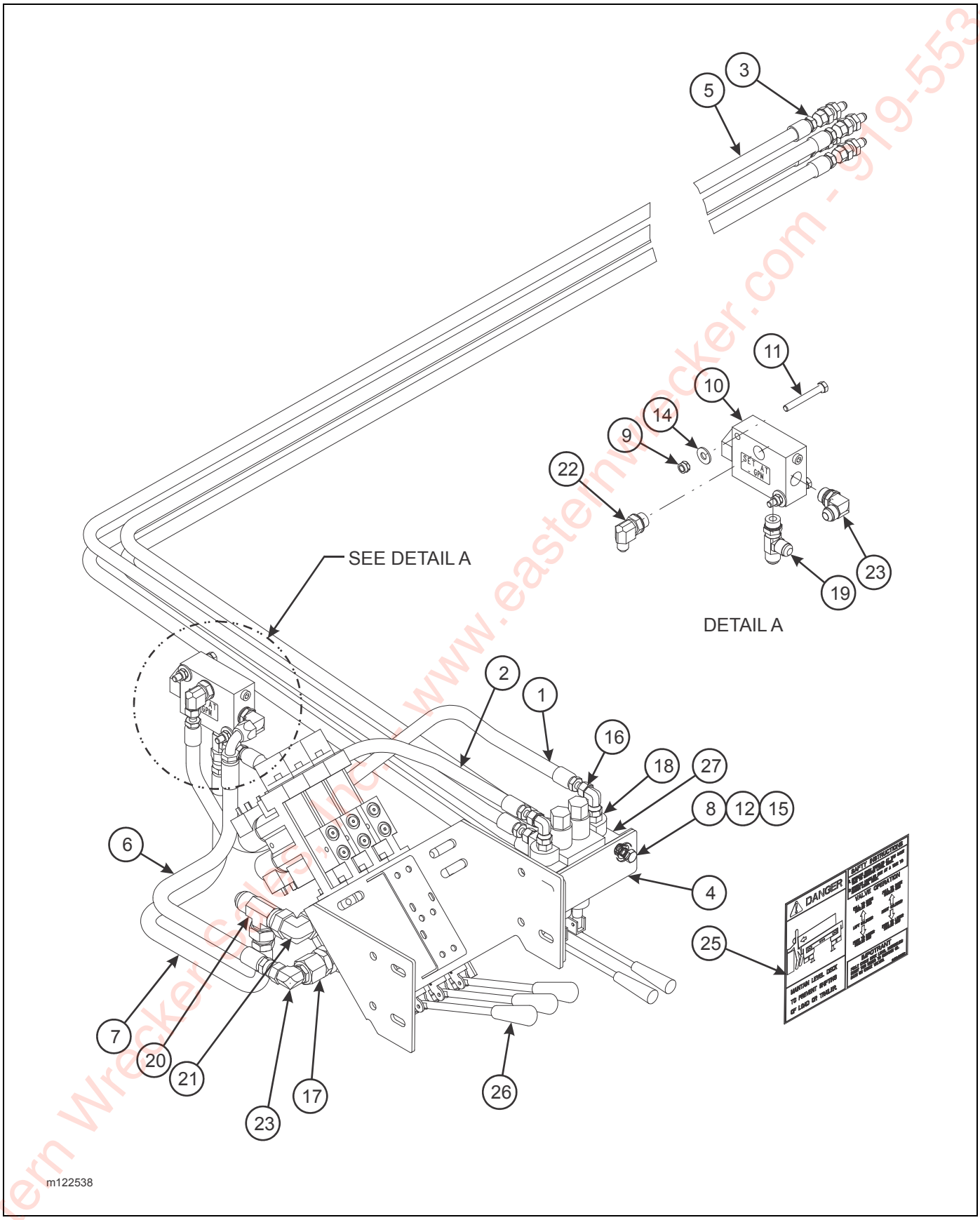

Figure 2-123: Dock Leveler Hydraulic Installation (1 of 2) (Option)

Eastern Wrecker Sales, Inc. - www.easternwrecker.com - 919-553-4038

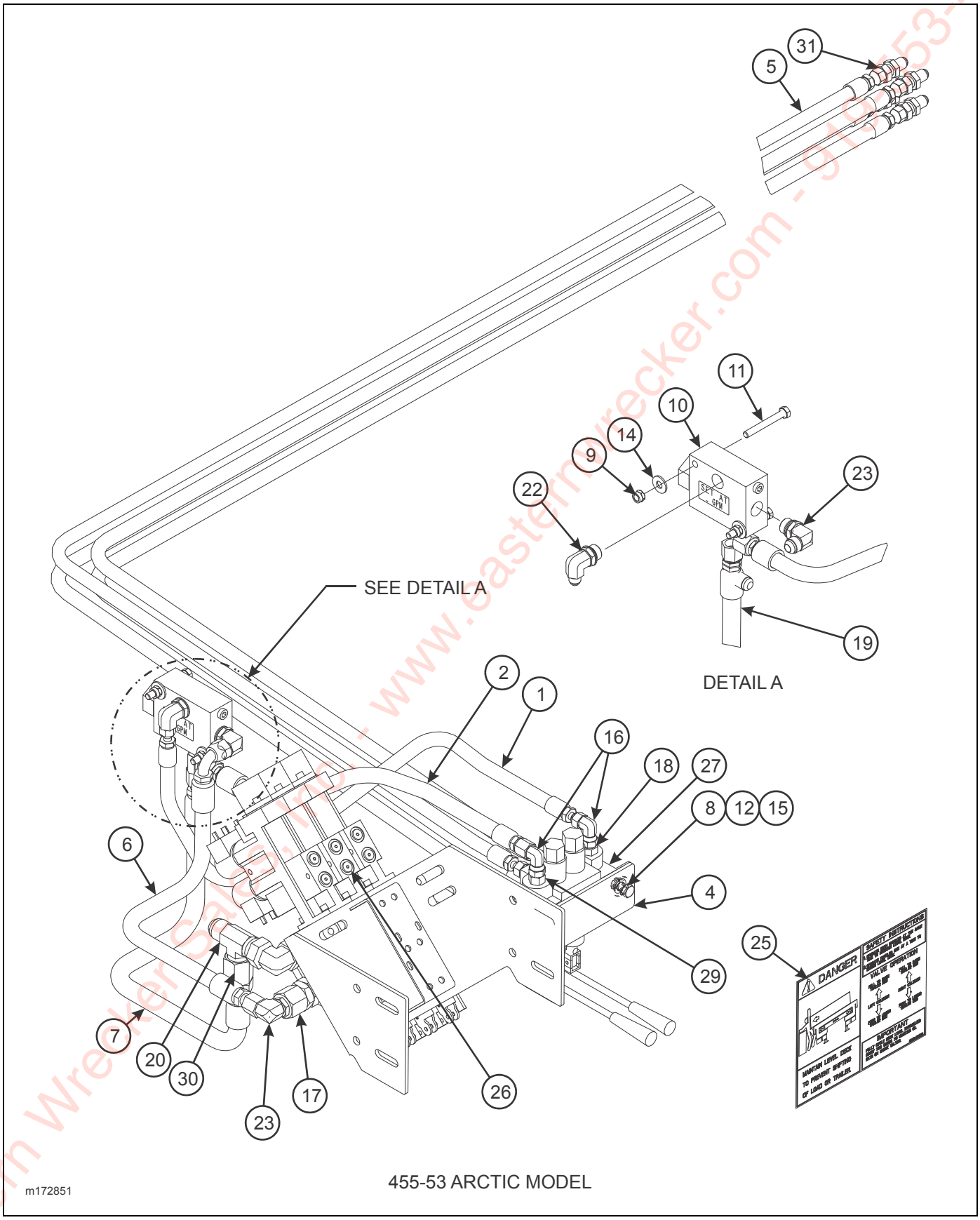

Figure 2-124: Dock Leveler Hydraulic Installation (2 of 2) (Option)

Eastern Wrecker Sales, Inc. - www.easternwrecker.com - 919-553-4038

DOCK LEVELER HYDRAULIC INSTALLATION

ITEM	PART NO.	DESCRIPTION	QTY.								
	122538	DOCK LEVELER HYDRAULIC INST 455-50	*								
	122812	DOCK LEVELER HYDRAULIC INST 455-48		*							
	126641	DOCK LEVELER HYDRAULIC INST 455-53			*						
	129099	DOCK LEVELER HYDRAULIC INST 425-45				*					
	131726	DOCK LEVELER HYDRAULIC INST 120K 455-48					*				
	141638	DOCK LEVELER HYDRAULIC INST 120K 455-50						*			
	141639	DOCK LEVELER HYDRAULIC INST 120K 455-53							*		
	170454	DOCK LEVELER HYDRAULIC INST 455-41								*	
	172851	DOCK LEVELER HYDRAULIC INST 455-53 ARCTIC									*
1	111302	HOSE ASSEMBLY 3/8 X 24	1	1	1	1	1	1	1	1	--
	169626	HOSE ASSEMBLY 3/8 X 24 ARCTIC	--	--	--	--	--	--	--	--	1
2	116429	HOSE ASSEMBLY 3/8 X 25	1	1	1	1	1	1	1	1	--
	169624	HOSE ASSEMBLY 3/8 X 25 ARCTIC	--	--	--	--	--	--	--	--	1
3	102-1097	37 FLARE BULKHEAD/ 37 FLARE	4	4	4	4	4	4	4	4	4
4	121124	BRACKET, VALVE DOCK LEVEL CONTROL	1	1	1	1	1	1	1	1	1
5	1-397-010307356	HOSE ASSEMBLY 3/8 X 356	4	--	--	--	--	4	--	--	--
	122813	HOSE ASSEMBLY 3/8 X 332	--	4	--	--	4	--	--	--	--
	126736	HOSE ASSEMBLY 3/8 X 392	--	--	4	--	--	--	4	--	--
	1-397-010307296	HOSE ASSEMBLY 3/8 X 296	--	--	--	4	--	--	--	--	--
	103166	HOSE ASSEMBLY 3/8 X 252	--	--	--	--	--	--	--	4	--
	172852	HOSE ASSEMBLY 3/8 X 392 ARCTIC	--	--	--	--	--	--	--	--	4
6	1-397-010302018	HOSE ASSEMBLY 1/2 X 18	1	1	1	1	1	1	1	1	--
	169620	HOSE ASSEMBLY 1/2 X 18 ARCTIC	--	--	--	--	--	--	--	--	1
7	1-397-010306028	HOSE ASSEMBLY 1/2 X 28	1	1	1	1	1	1	1	1	--
	172862	HOSE ASSEMBLY 1/2 X 28 ARCTIC	--	--	--	--	--	--	--	--	1
8	1-510-010001	NUT, FLANGE LOCK 3/8-16	2	2	2	2	2	2	2	2	2
9	1-512-010005-03	NUT, HEX LOCK 5/16-18 GRB	2	2	2	2	2	2	2	2	2
10	1-626-010002-03	REGULATOR FLOW 1/2 BYPASS ONLY	1	1	1	1	--	--	--	1	1
	1-626-010002-06	REGULATOR, FLOW 1-1/2-6	--	--	--	--	1	1	1	--	--
11	1-654-010049-11	SCREW, HEX HEAD CAP 5/16-18 X 2-1/2 GR5	2	2	2	2	2	2	2	2	2
12	1-654-010051-05	SCREW, HEX HEAD CAP 3/8-16 X 1 GR5	2	2	2	2	2	2	2	2	2
13	1-796-010003-02	TIE, STRAP PLASTIC (NOT SHOWN)	AR	AR	AR	AR	AR	AR	AR	AR	AR
14	1-861-010032-09	WASHER, FLAT 5/16W	2	2	2	2	2	2	2	2	2
15	1-861-010032-11	WASHER, FLAT 3/8W	2	2	2	2	2	2	2	2	2
16	102-0031	ADAPTER, 90	2	2	2	2	2	2	2	2	2

Eastern Wrecker Sales, Inc. - www.easternwrecker.com - 919-553-4038

DOCK LEVELER HYDRAULIC INSTALLATION

ITEM	PART NO.	DESCRIPTION	QTY.								
17	138179	POWER BEYOND REMOTE	1	1	1	1	--	--	--	--	--
	1V0208	POWER BEYOND REMOTE (CROSS VALVE)	--	--	--	--	1	1	--	--	--
18	202702-6-6S	ADAPTER, STRAIGHT	6	6	6	6	6	6	6	6	6
19	203005-8-8S	ADAPTER, TEE	1	1	1	1	1	1	1	1	1
20	203102-12-12S	ADAPTER TEE	1	1	1	1	1	1	1	1	1
21	2062-10-12S	ADAPTER, 90	REF								
22	2062-8-6S	ADAPTER, 90°	1	1	1	1	1	1	1	1	1
23	2062-8-8S	ADAPTER, 90°	2	2	2	2	2	2	2	2	2
24	3-201-010002	CONDUIT FLEX PLASTIC 3/8 (NOT SHOWN)	3	3	3	3	3	3	3	3	3
25	3-573-010202	DECAL, DANGER OP D/L (REAR) (SEE PAGE 2-5)	1	1	1	1	1	1	1	1	1
26	-----	VALVE, 3 SPOOL 2500 PSI	REF								
27	3-846-010056	VALVE, DOUBLE SPOOL STACK (SEE PAGE 2-247) PRIOR TO 01/15/2014	1	1	1	1	1	1	1	1	1
	179649	VALVE, DOUBLE SPOOL, AFTER 01/15/2014	1	1	1	1	1	1	1	1	1
28	2024-12-8S	ELBOW, 90 (NOT SHOWN)	--	--	--	--	1	1	--	--	--
29	202702-6-8S	ADAPTER	--	--	--	--	--	--	--	--	1
30	102-1112	REDUCER	--	--	--	--	--	--	--	--	1
31	0018127	FITTING, BULKHEAD UNION SS	--	--	--	--	--	--	--	--	4

Eastern Wrecker Sales, Inc. - www.easternwrecker.com - 919-553-4038

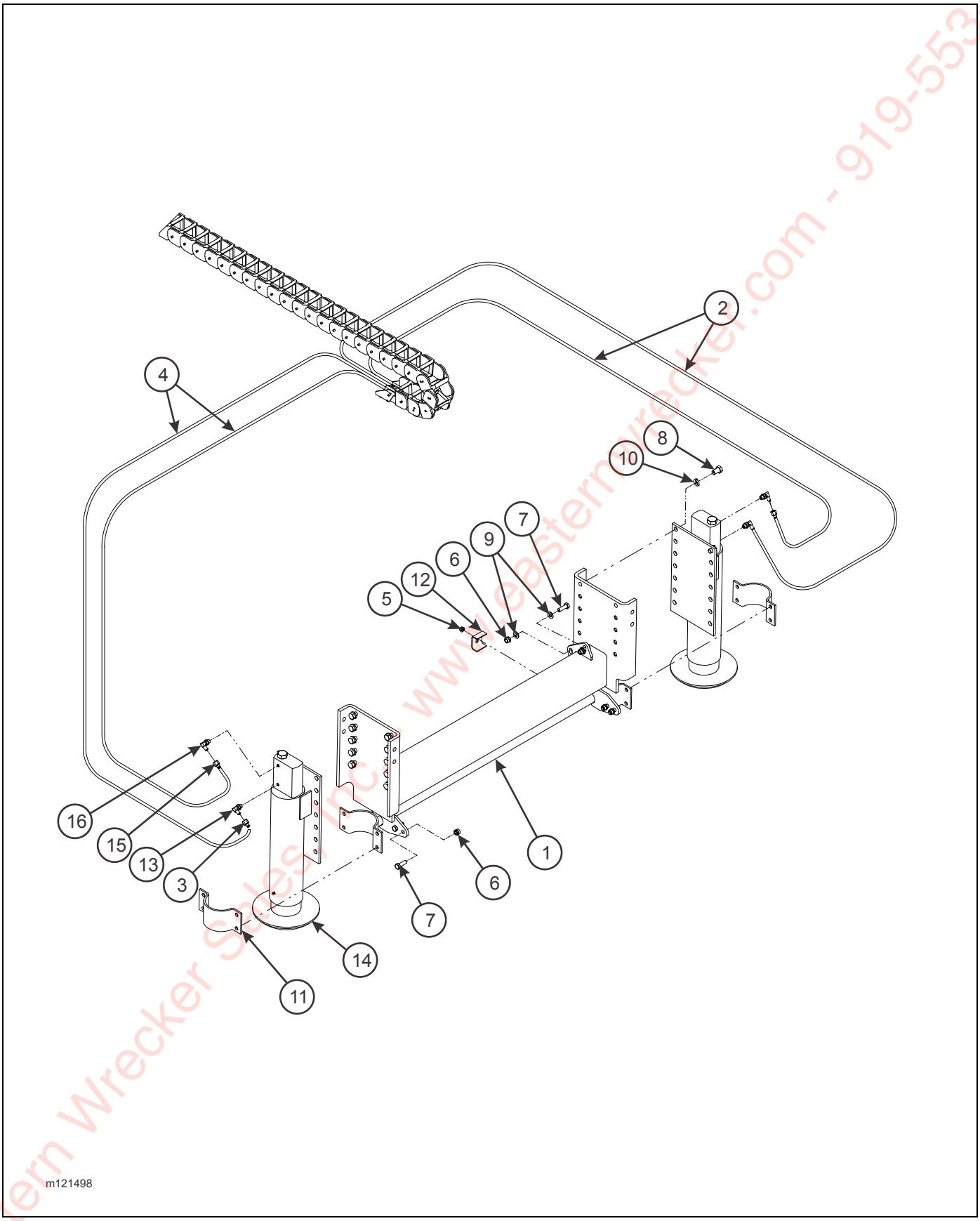

Figure 2-125: Dock Leveler Assembly, Single 60K

Eastern Wrecker Sales, Inc. www.easternwrecker.com - 919-553-4038

DOCK LEVELER ASSEMBLY, SINGLE 60K

ITEM	PART NO.	DESCRIPTION	QTY.
	121498	DOCK LEVEL ASSEMBLY SINGLE 60K	
1	121402	MOUNT WELDMENT, D/L	1
2	122540	HOSE ASSEMBLY 1/4 X 240	2
3	1-007-010058	ADAPTER, 90° 3/8 ELBOW W/ RESTR	2
4	1-397-010262-5	HOSE ASSEMBLY 1/4 X 216	2
5	1-510-010001	NUT, FLANGE LOCK 3/8-16 GRB	5
6	1-512-010005-09	NUT, HEX LOCK 1/2-13 GRB	8
7	1-654-010055-03	SCREW, HEX HEAD CAP 1/2-13 X 1-1/2 GR5	8
8	1-654-010059-01	SCREW, HEX HEAD CAP 5/8-11 X 1 GR5	24
9	1-861-010032-14	WASHER, FLAT 1/2N	8
10	1-861-010034-15	WASHER, SPLIT LOCK 5/8	24
11	100348	MOUNTING BRACKET FOR CYLINDER	REF
12	2-181-010001	CLAMP, HOSE	3
13	2062-6-4S	ADAPTER, 90	4
14	3-242-010205	CYLINDER, HYDRAULIC 4X15 (W/ COLLAR) (SEE PAGE 2-244)	2
15	202702-6-4S	ADAPTER, STRAIGHT	2
16	138155	ADAPTER, 90	2
17	1-394-010002	HOSE, ABRASION SLEEVE X 2-7/8 (NOT SHOWN)	AR

Eastern Wrecker Sales, Inc. - www.easternwrecker.com - 919-553-4038

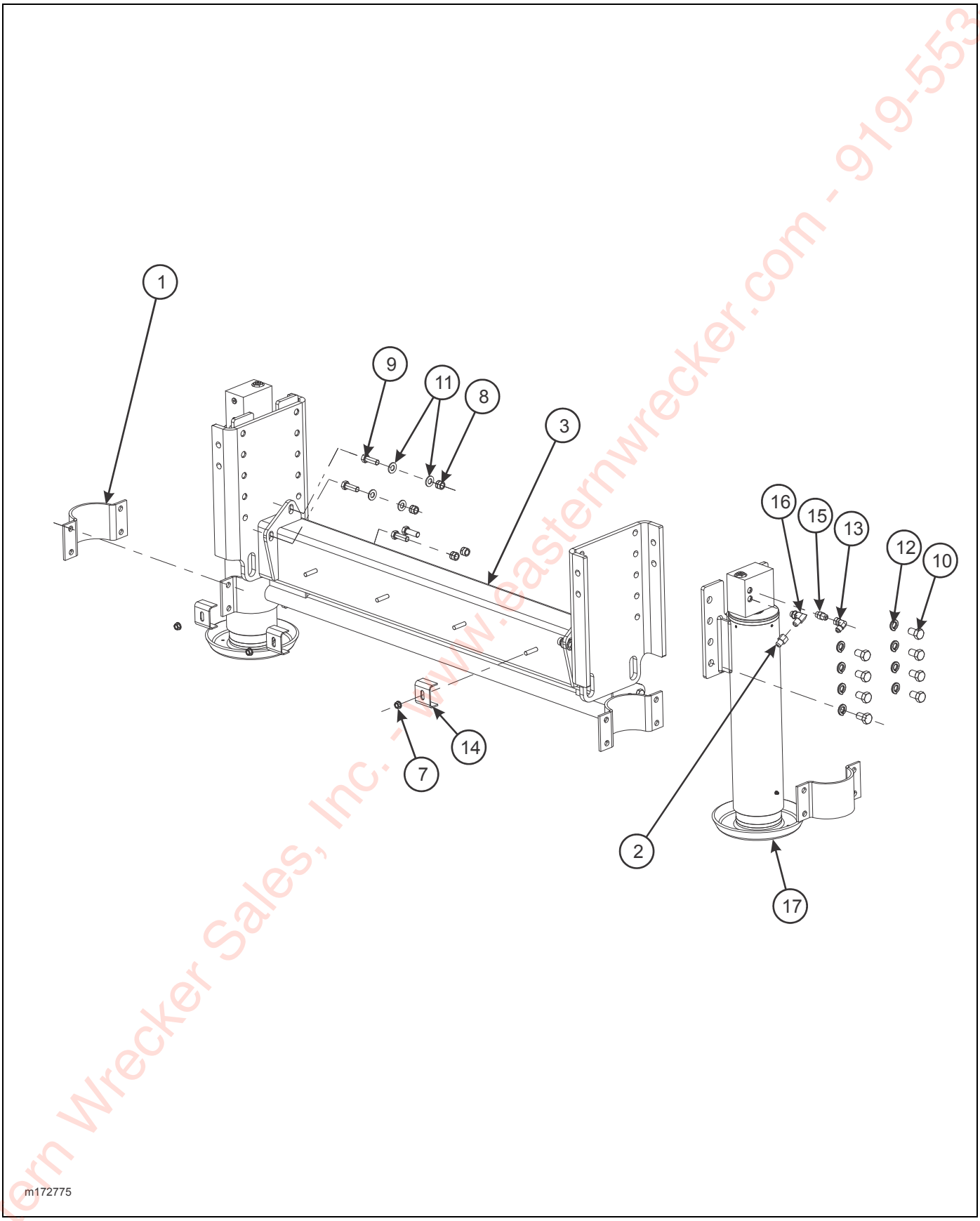

Figure 2-126: Dock Leveler Assembly, Single 60K Arctic

Eastern Wrecker Sales, Inc. - www.easternwrecker.com - 919-553-4038

DOCK LEVELER ASSEMBLY, SINGLE 60K ARCTIC

ITEM	PART NO.	DESCRIPTION	QTY.
	172775	DOCK LEVEL ASSEMBLY SINGLE 60K ARCTIC	
1	100348	MOUNTING BRACKET FOR CYLINDER	REF
2	118165	ADAPTER, HYDRAULIC W/ 3/32 RESTRICTOR	2
3	121402	MOUNT WELDMENT, D/L	1
4	172776	HOSE ASSEMBLY, 3/8 X 240 ARCTIC (TO CURBSIDE CYLINDER)	2
5	172848	HOSE ASSEMBLY, 3/8 X 216 ARCTIC (TO STREETSIDE CYLINDER)	2
6	1-394-010002	HOSE, ABRASION SLEEVE X 2-7/8 (NOT SHOWN)	AR
7	1-510-010001	NUT, FLANGE LOCK 3/8-16 GRB	3
8	1-512-010005-09	NUT, HEX LOCK 1/2-13 GRB	8
9	1-654-010055-03	SCREW, HEX HEAD CAP 1/2-13 X 1-1/2 GR5	8
10	1-654-010059-01	SCREW, HEX HEAD CAP 5/8-11 X 1 GR5	20
11	1-861-010032-14	WASHER, FLAT 1/2N	8
12	1-861-010034-15	WASHER, SPLIT LOCK 5/8	20
13	102-0031	ADAPTER, 90	2
14	2-181-010001	CLAMP, HOSE	3
15	202702-6-6S	ADAPTER, STRAIGHT	2
16	2062-6-6S	ADAPTER, 90	2
17	3-242-010205	CYLINDER, HYDRAULIC 4X15 (W/ COLLAR) (SEE PAGE 2-244)	2

Eastern Wrecker Sales, Inc. - www.easternwrecker.com - 919-553-4038

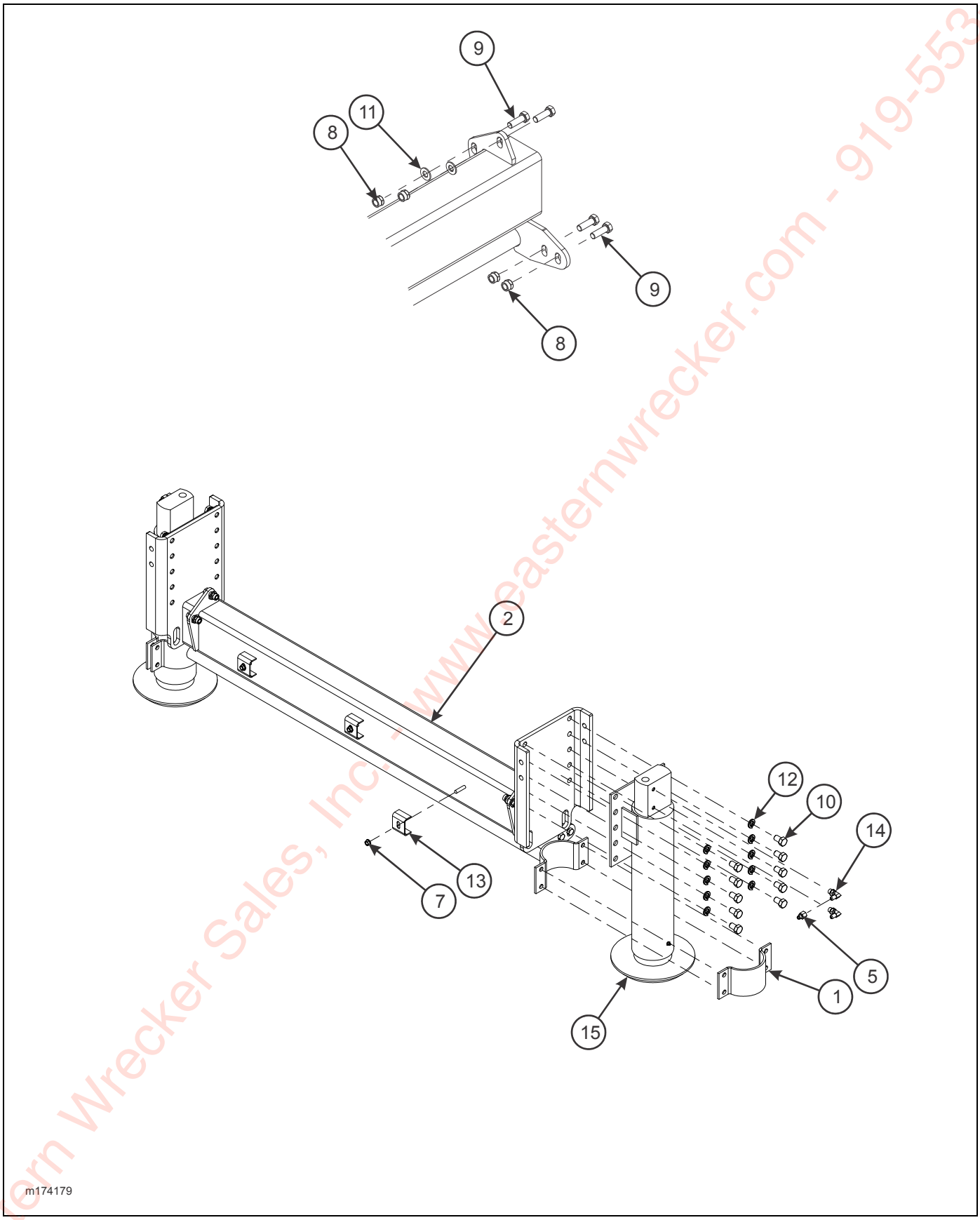

Figure 2-127: Dock Leveler Assembly, Single 60K

Eastern Wrecker Sales, Inc. - www.easternwrecker.com - 919-553-4038

DOCK LEVELER ASSEMBLY, 60K (455-120)

ITEM	PART NO.	DESCRIPTION	QTY.
	174179	DOCK LEVEL ASSEMBLY, 60K (455-120)	
1	100348	MOUNTING BRACKET FOR CYLINDER	REF
2	174181	MOUNT WELDMENT, DOCK LEVEL	1
3	174184	HOSE ASSEMBLY, 1/4 X 232 (TO STREETSIDE CYLINDER)	2
4	174185	HOSE ASSEMBLY, 1/4 X 270 (TO CURBSIDE CYLINDER)	2
5	1-007-010058	ADAPTER, 90° 3/8 ELBOW W/ RESTR	2
6	1-394-010001	HOSE, ABRASION SLEEVE X 2 (NOT SHOWN)	AR
7	1-510-010001	NUT, FLANGE LOCK 3/8-16 GRB	3
8	1-512-010005-09	NUT, HEX LOCK 1/2-13 GRB	8
9	1-654-010055-03	SCREW, HEX HEAD CAP 1/2-13 X 1-1/2 GR5	8
10	1-654-010059-01	SCREW, HEX HEAD CAP 5/8-11 X 1 GR5	20
11	1-861-010032-14	WASHER, FLAT 1/2N	8
12	1-861-010034-15	WASHER, SPLIT LOCK 5/8	20
13	2-181-010001	CLAMP, HOSE	3
14	2062-6-4S	ADAPTER, 90	4
15	3-242-010205	CYLINDER, HYDRAULIC 4X15 (W/ COLLAR) (SEE PAGE 2-244)	2

Eastern Wrecker Sales, Inc. - www.easternwrecker.com - 919-553-4038

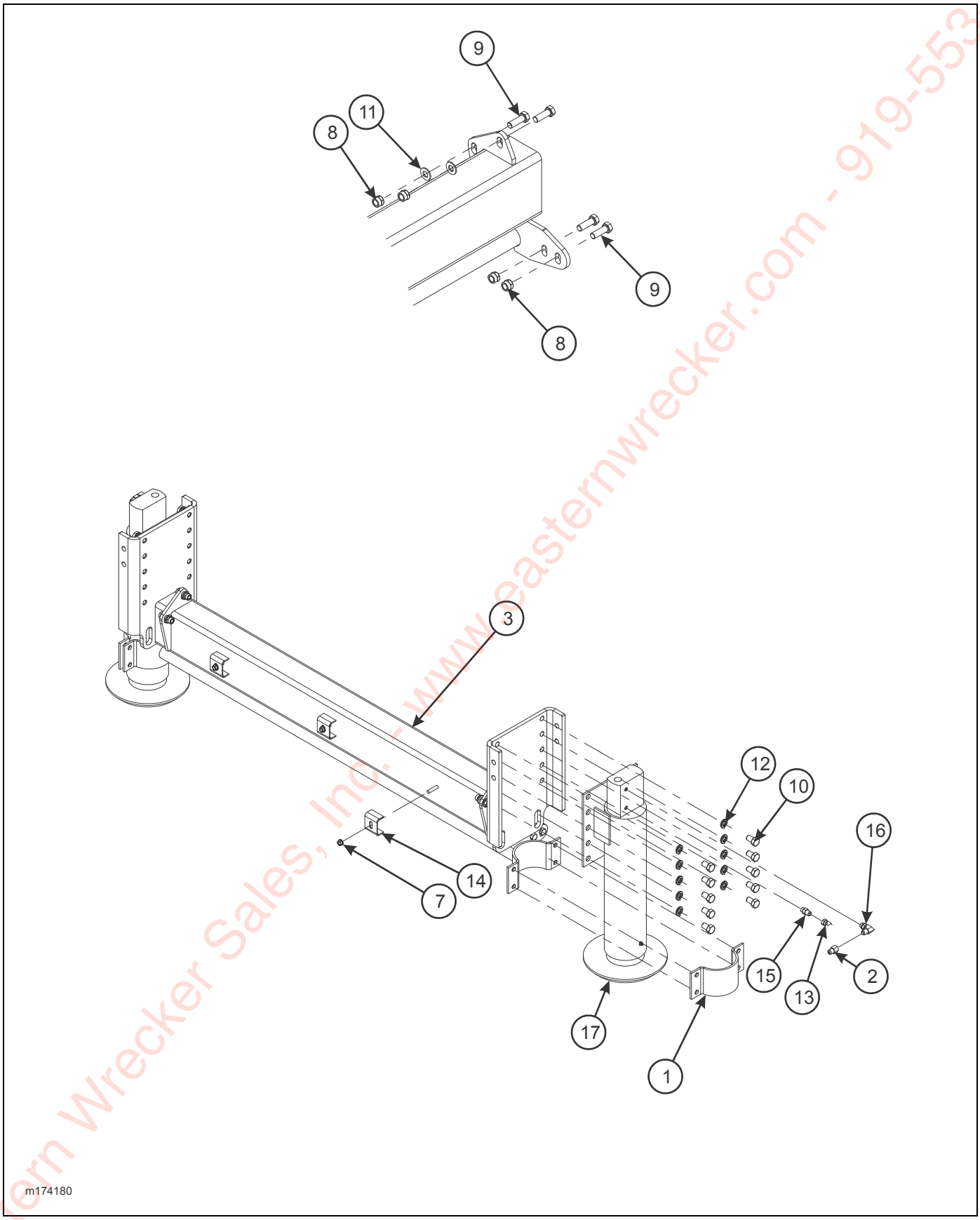

Figure 2-128: Dock Leveler Assembly, 60K Arctic (455-120)

Eastern Wrecker Sales, Inc. - www.easternwrecker.com - 919-553-4038

DOCK LEVELER ASSEMBLY, 60K ARCTIC (455-120)

ITEM	PART NO.	DESCRIPTION	QTY.
	174180	DOCK LEVEL ASSEMBLY SINGLE 60K	
1	100348	MOUNTING BRACKET FOR CYLINDER	REF
2	118165	ADAPTER, HYDRAULIC W/ 3/32 RESTRICTOR	2
3	174181	MOUNT WELDMENT, DOCK LEVEL	1
4	174186	HOSE ASSEMBLY, 3/8 X 232 ARCTIC (TO STREETSIDE CYLINDER)	2
5	174187	HOSE ASSEMBLY, 3/8 X 270 ARCTIC (TO CURBSIDE CYLINDER)	2
6	1-394-010001	HOSE, ABRASION SLEEVE X 2 (NOT SHOWN)	AR
7	1-510-010001	NUT, FLANGE LOCK 3/8-16 GRB	3
8	1-512-010005-09	NUT, HEX LOCK 1/2-13 GRB	8
9	1-654-010055-03	SCREW, HEX HEAD CAP 1/2-13 X 1-1/2 GR5	8
10	1-654-010059-01	SCREW, HEX HEAD CAP 5/8-11 X 1 GR5	20
11	1-861-010032-14	WASHER, FLAT 1/2N	8
12	1-861-010034-15	WASHER, SPLIT LOCK 5/8	20
13	102-0031	ADAPTER, 90	2
14	2-181-010001	CLAMP, HOSE	3
15	202702-6-6S	ADAPTER, STRAIGHT	2
16	2062-6-6S	ADAPTER, 90	2
17	3-242-010205	CYLINDER, HYDRAULIC 4X15 (W/ COLLAR) (SEE PAGE 2-244)	2

Eastern Wrecker Sales, Inc. - www.easternwrecker.com - 919-553-4038

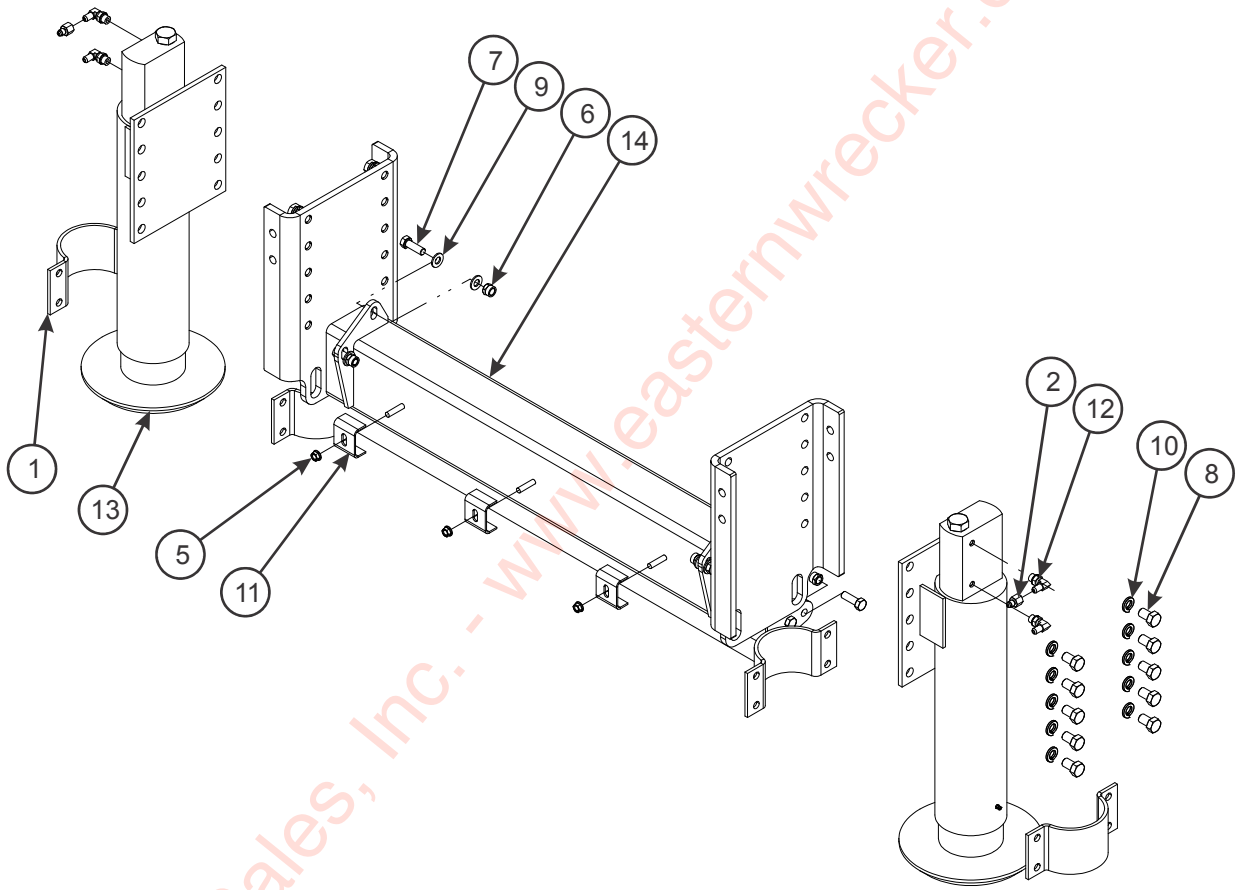

m130851

Figure 2-129: Dock Leveler Assembly, Single 60K Euro

Eastern Wrecker Sales, Inc. - www.easternwrecker.com - 919-553-4038

DOCK LEVELER ASSEMBLY, SINGLE 60K EURO

ITEM	PART NO.	DESCRIPTION	QTY.
	130851	DOCK LEVEL ASSEMBLY SINGLE 60K	
1	100348	MOUNTING BRACKET FOR CYLINDER	REF
2	1-007-010058	ADAPTER, 90° 3/8 ELBOW W/ RESTR	2
3	1-394-010001	HOSE, ABRASION SLEEVE X 2 (NOT SHOWN)	AR
4	1-397-010262-5	HOSE ASSEMBLY 1/4 X 216 (NOT SHOWN)	2
5	1-510-010001	NUT, FLANGE LOCK 3/8-16 GRB	3
6	1-512-010005-09	NUT, HEX LOCK 1/2-13 GRB	8
7	1-654-010055-03	SCREW, HEX HEAD CAP 1/2-13 X 1-1/2 GR5	8
8	1-654-010059-01	SCREW, HEX HEAD CAP 5/8-11 X 1 GR5	20
9	1-861-010032-14	WASHER, FLAT 1/2N	8
10	1-861-010034-15	WASHER, SPLIT LOCK 5/8	20
11	2-181-010001	CLAMP, HOSE	3
12	2062-6-4S	ADAPTER, 90	4
13	3-242-010205	CYLINDER, HYDRAULIC 4X15 (W/ COLLAR) (SEE PAGE 2-244)	2
14	3-482-010472	MOUNT WELDMENT, DOCK LEVEL 60K	1
15	122540	HOSE ASSEMBLY 1/4 X 240 (NOT SHOWN)	2

Eastern Wrecker Sales, Inc. - www.easternwrecker.com - 919-553-4038

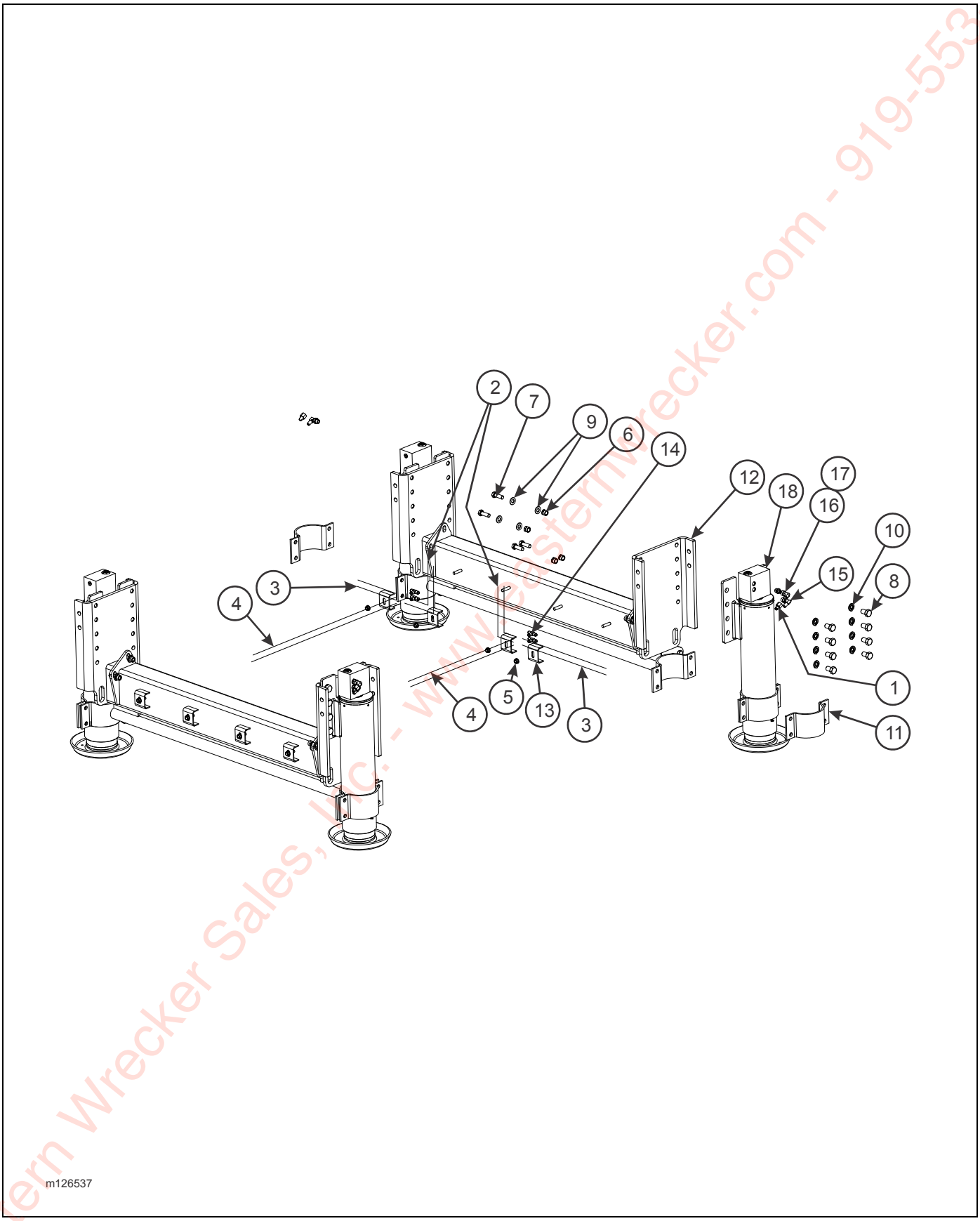

Figure 2-130: Dock Leveler Assembly, 120K

Eastern Wrecker Sales, Inc. - www.easternwrecker.com - 919-553-4038

DOCK LEVELER ASSEMBLY, 120K

ITEM	PART NO.	DESCRIPTION	QTY.
	126537	DOCK LEVEL ASSEMBLY SINGLE 120K	
1	1-007-010058	ADAPTER, 90° 3/8 ELBOW W/ RESTR	4
2	1-397-010262-5	HOSE ASSEMBLY 1/4 X 216	4
3	1-397-010262028	HOSE ASSEMBLY 1/4 X 28	4
4	1-397-010262100	HOSE ASSEMBLY 1/4 X 100	2
5	1-510-010001	NUT, FLANGE LOCK 3/8-16 GRB	8
6	1-512-010005-09	NUT, HEX LOCK 1/2-13 GRB	16
7	1-654-010055-03	SCREW, HEX HEAD CAP 1/2-13 X 1-1/2 GR5	16
8	1-654-010059-01	SCREW, HEX HEAD CAP 5/8-11 X 1 GR5	32
9	1-861-010032-14	WASHER, FLAT 1/2N	16
10	1-861-010034-15	WASHER, SPLIT LOCK 5/8	32
11	100348	MOUNTING BRACKET FOR CYLINDER	REF
12	121402	MOUNT WELDMENT, D/L	2
13	2-181-010001	CLAMP, HOSE	8
14	2033-4-4S	ADAPTER, TEE	4
15	2062-6-4S	ADAPTER, 90	4
16	138155	ADAPTER, 90	4
17	202702-6-4S	ADAPTER, STRAIGHT	4
18	3-242-010205	CYLINDER, HYDRAULIC 4X15 (W/ COLLAR) (SEE PAGE 2-244)	4
19	1-394-010002	HOSE, ABRASION SLEEVE X 2-7/8 (NOT SHOWN)	AR

Eastern Wrecker Sales, Inc. - www.easternwrecker.com - 919-553-4038

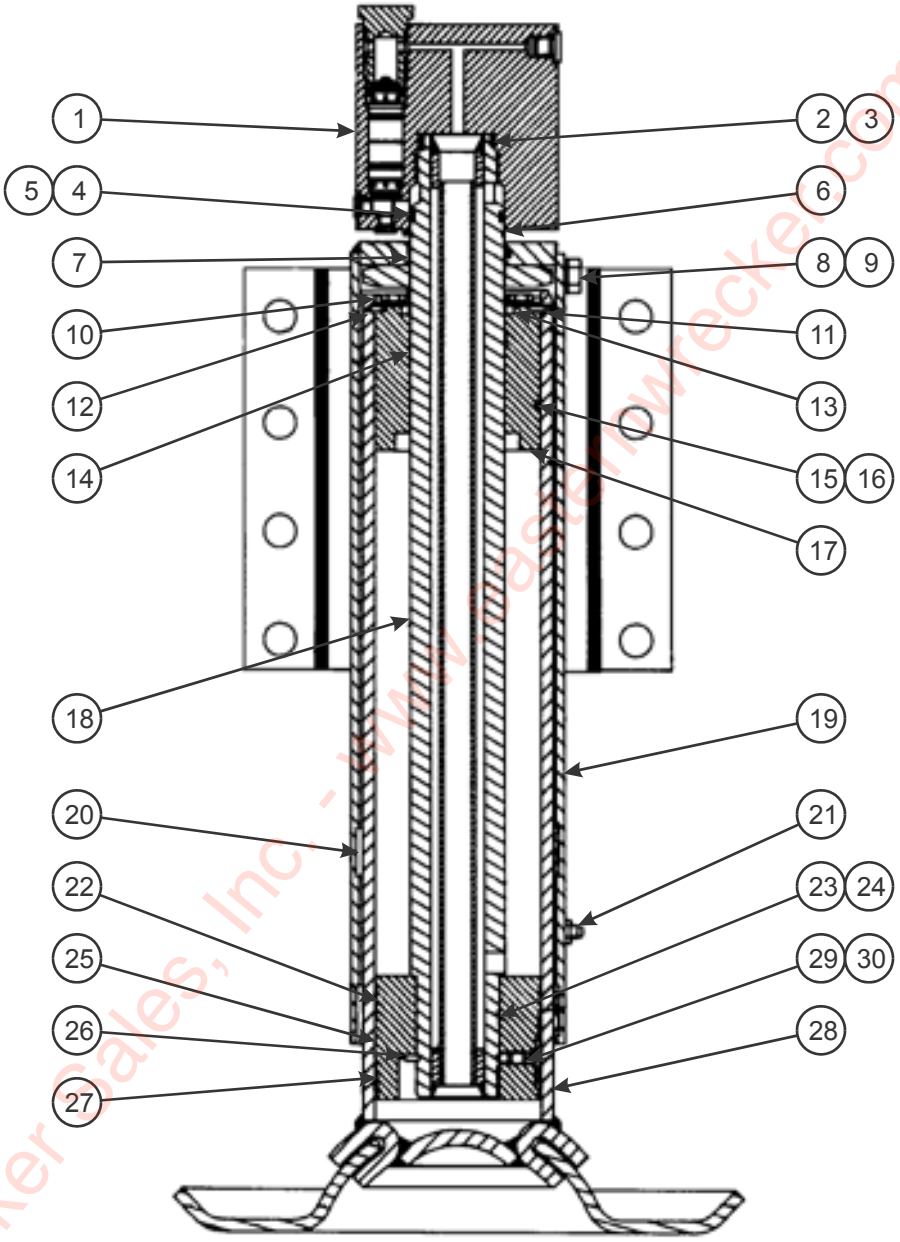

dock leg op p1

Figure 2-131: Dock Leveler Leg Assembly w/ Lock Valve (1 of 2)

Eastern Wrecker Sales, Inc. - www.easternwrecker.com - 919-553-4038

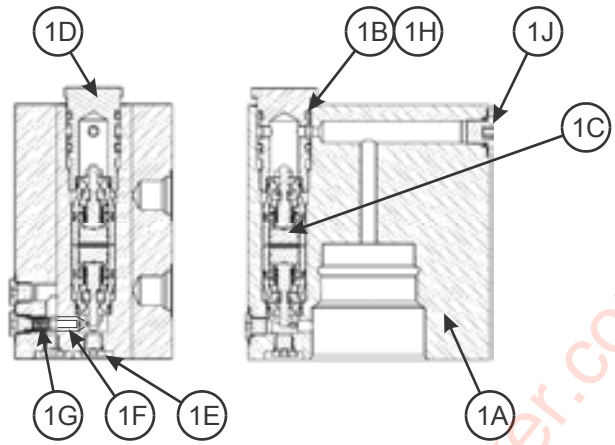

SIDE SECTION FRONT SECTION

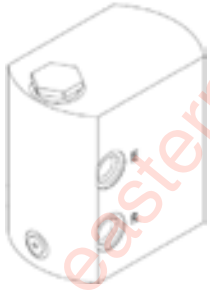

STABILIZER LEG
CHECK VALVE
(PRIOR TO 03/19/2010)

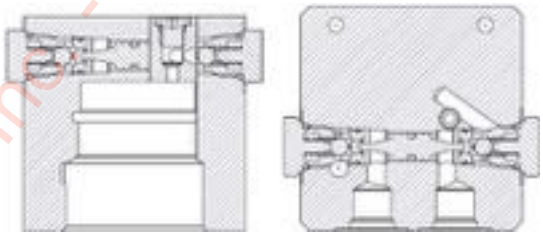

FRONT SECTION TOP SECTION

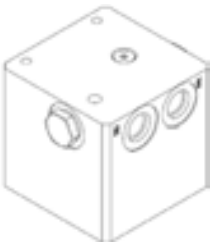

STABILIZER LEG
CHECK VALVE
(AFTER 03/19/2010)

dock leg op p2

Figure 2-132: Dock Leveler Leg Assembly w/ Lock Valve (2 of 2)

Eastern Wrecker Sales, Inc. - www.easternwrecker.com - 919-553-4038

LEG ITEMS, DOCK LEVELER W/ LOCK VALVE

ITEM	PART NO.	REFERENCE NO.	DESCRIPTION	QTY.
	3-242-010205		COMPLETE ASSEMBLY LEG CYL (60,000# CAP. 4.00" BORE)	
1	165769		VALVE SERVICE KIT (AFTER 03/19/2010)	1
	165768		VALVE RETROFIT KIT (AFTER 03/19/2010)	1
	300092	300092	VALVE SERVICE KIT (PRIOR TO 03/19/2010) (INCL. ITEMS 1A - 1I)	1
1A	-----	300093	4:1 LOCK VALVE BODY	1
1B	-----	01-1006	O-RING	2
1C	-----	300427	PILOT OPERATED CHECK VALVE	2
1D	-----	300022	RETAINING PLUG	1
1E	-----	07-1061	HEX PLUG HOLLOW #02 SAE	5
1F	-----	300003	POPPET	1
1G	-----	31-1016	SPRING	1
1H	-----	05-1009	BACK-UP WASHER	2
1J	-----	07-1201	HEX PLUG HOLLOW #04 SAE	1
2	-----	NSS*,**	O-RING	1
3	-----	NSS*,**	BACK-UP WASHER	2
4	-----	NSS*,**	O-RING	1
5	-----	NSS*,**	BACK-UP WASHER	1
6	-----	NSS**	SNAP RING 2" ROD	1
7	-----	NSS**	O-RING	1
8	-----	15-1021	SCREW, HEX HEAD CAP	1
9	-----	16-1002	LOCK WASHER	1
10	-----	15-1012	SCREW, HEX HEAD CAP	4
11	100279		CYLINDER HEAD RETAINER	1
12	-----	NSS**	RETAINING RING	1
13	-----	NSS**	OIL SEAL	1
14	-----	NSS**	ROD SEAL	1
15	-----	NSS**	O-RING	1
16	-----	NSS**	BACK-UP WASHER	1
17	100276		CYLINDER HEAD	1
18	-----	***	PISTON ROD	1
19	-----	***	WELL TUBE	1
20	-----	NSS**	WEAR RING	2
21	-----	10-1001	GREASE FITTING	1
22	-----	NSS**	PISTON SEAL	1
23	-----	NSS**	O-RING	1
24	-----	NSS**	BACK-UP WASHER	2
25	-----	NSS**	WEAR RING	1
26	-----	17-1003	SNAP RING	1
27	-----	***	PISTON	1
28	-----	***	CYLINDER TUBE	1
29	-----	NSS**	NYLON BALL	1
30	-----	NSS**	SET SCREW	1
31	100348		SPLIT COLLAR ASSEMBLY (60,000 LB.)(NOT SHOWN) (INCL. THE FOLLOWING:)	1
	-----	NSS	SPLIT COLLAR HALF (60,000 LB.)	2
	-----	NSS	LEG COLLAR MOUNTING KIT	1
	-----	NSS	SCREW, HEX HEAD CAP 1/2-20 X 2 GR5	4
	-----	NSS	NUT, HEX LOCK 1/2-20	4
	-----	NSS	SPACER, SPLIT COLLAR	4

Eastern Wrecker Sales, Inc. - www.easternwrecker.com - 919-553-4038

LEG ITEMS, DOCK LEVELER W/ LOCK VALVE

ITEM	PART NO.	REFERENCE NO.	DESCRIPTION	QTY.

* - THESE ITEMS ARE CONTAINED IN THE LOCK VALVE REPAIR KIT 300085 (NSS).

** - ITEMS ARE CONTAINED IN LEG REPAIR KIT 100422 (4.00" BORE) (NSS).

*** STATE MODEL NUMBER AND PART DESCRIPTION WHEN ORDERING.

NSS: NOT SOLD SEPARATELY

Eastern Wrecker Sales, Inc. - www.easternwrecker.com - 919-553-4038

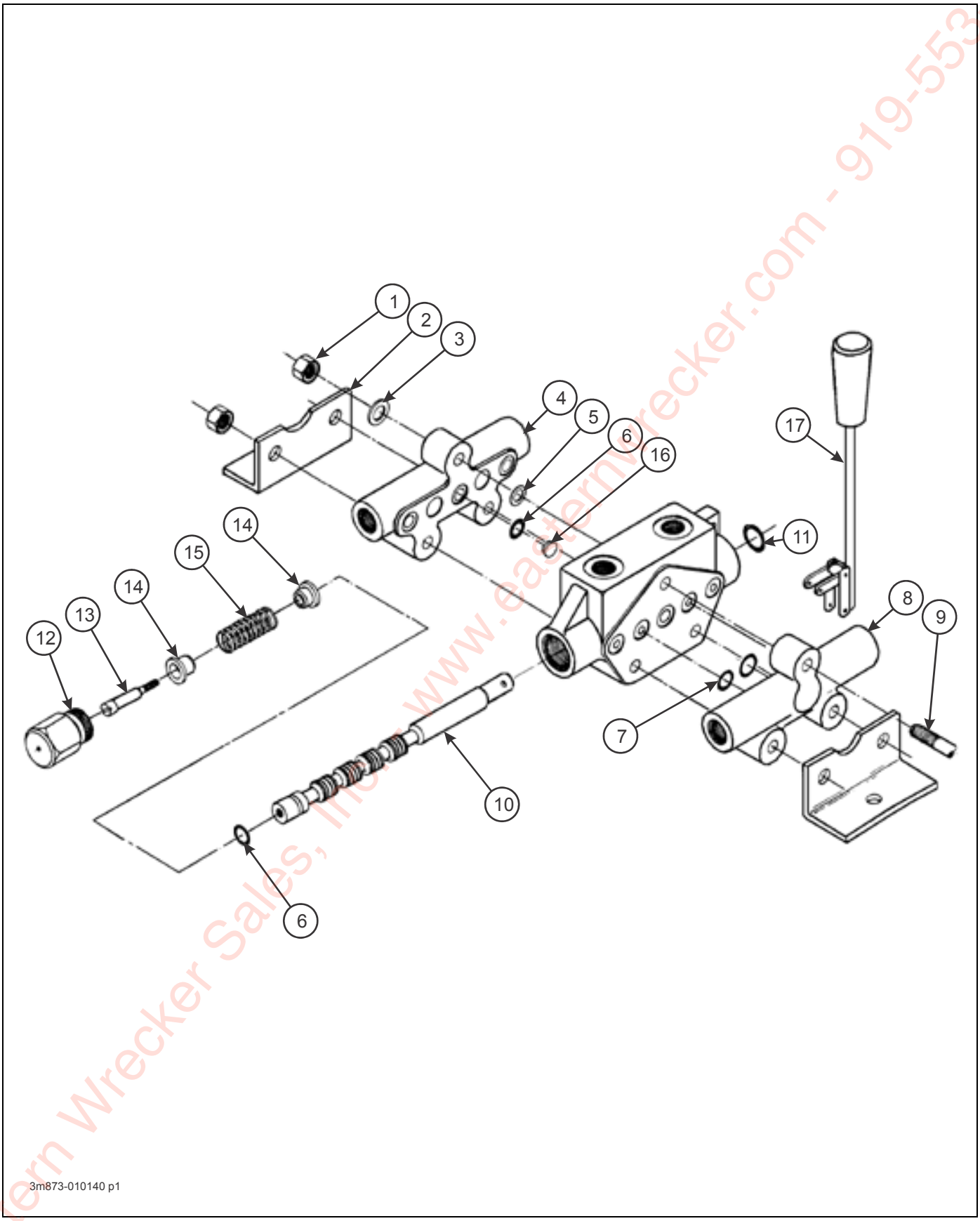

Figure 2-133: Dock Leveler Valve

Eastern Wrecker Sales, Inc. www.easternwrecker.com - 919-553-4038

DOCK LEVELER VALVE

ITEM	PART NO.	REFERENCE NO.	DESCRIPTION	QTY.
	3-846-010056		DOUBLE SPOOL STACK VALVE-PARALLEL	1
1	-----	1005013	NUT	3
2	-----	4014240	MOUNTING BRACKET	2
3	-----	1008008	WASHER	2
4	-----	6402000	OUTLET SECTION (INCLUDES SEALS)	1
	-----	6029521	OUTLET SEAL KIT	1
5	-----	4023150	MYLAR SHIM (BETWEEN SECTIONS)	3
6	-----	0101012	O-RING	1
7	-----	0101013	O-RING	10
8	-----	6401003	INLET SECTION (INCLUDES SEALS)	1
	-----	6009250	INLET SEAL KIT	1
9	-----	4023774	TIE ROD	3
10	-----	6400000	VALVE SECTION	2
	-----	6029520	VALVE SECTION SEAL KIT (INCLUDES ITEMS 5, 6, 7, & 11)	6
11	-----	0101112	O-RING	2
12	-----	4010500	SPRING CAP	2
13	4010520	4010520	SPRING SHAFT	2
14	4010530	4010530	SPRING GUIDE	4
15	-----	————-	SPRING	2
16	-----	4011702	CLOSED CENTER PLUG	1
	6405000	6405000	HANDLE KIT	2
	-----	6404002	BANKING KIT (INCLUDES ITEMS 1, 2, 3, & 9)	2

Eastern Wrecker Sales, Inc. - www.easternwrecker.com - 919-553-4038

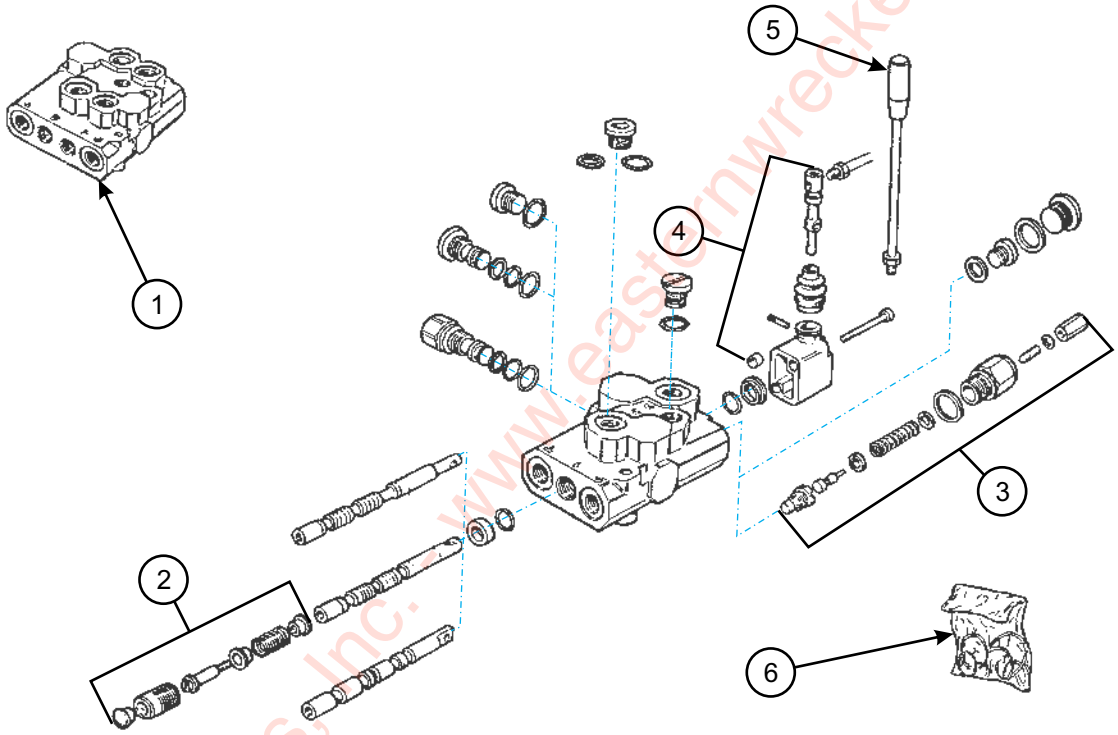

Figure 2-134: Dock Leveler Valve (After 01/15/2014)

Eastern Wrecker Sales, Inc. - www.easternwrecker.com - 919-553-4038

DOCK LEVELER VALVE (After 01/15/2014)

ITEM	PART NO.	REFERENCE NO.	DESCRIPTION	QTY.
1	179649	-----	DOUBLE SPOOL STACK VALVE-PARALLEL,	
2	194731	20768510010	SPOOL POSITIONER SPRING CENTER	1
3	194732	20787400710	RELIEF VALVE ASSEMBLY	1
4	194733	200707010070	SPOOL OPERATOR	1
5	194734	200702210230	HANDLE	1
6	194735	200773800350	SEAL KIT	1

Eastern Wrecker Sales, Inc. - www.easternwrecker.com - 919-553-4038

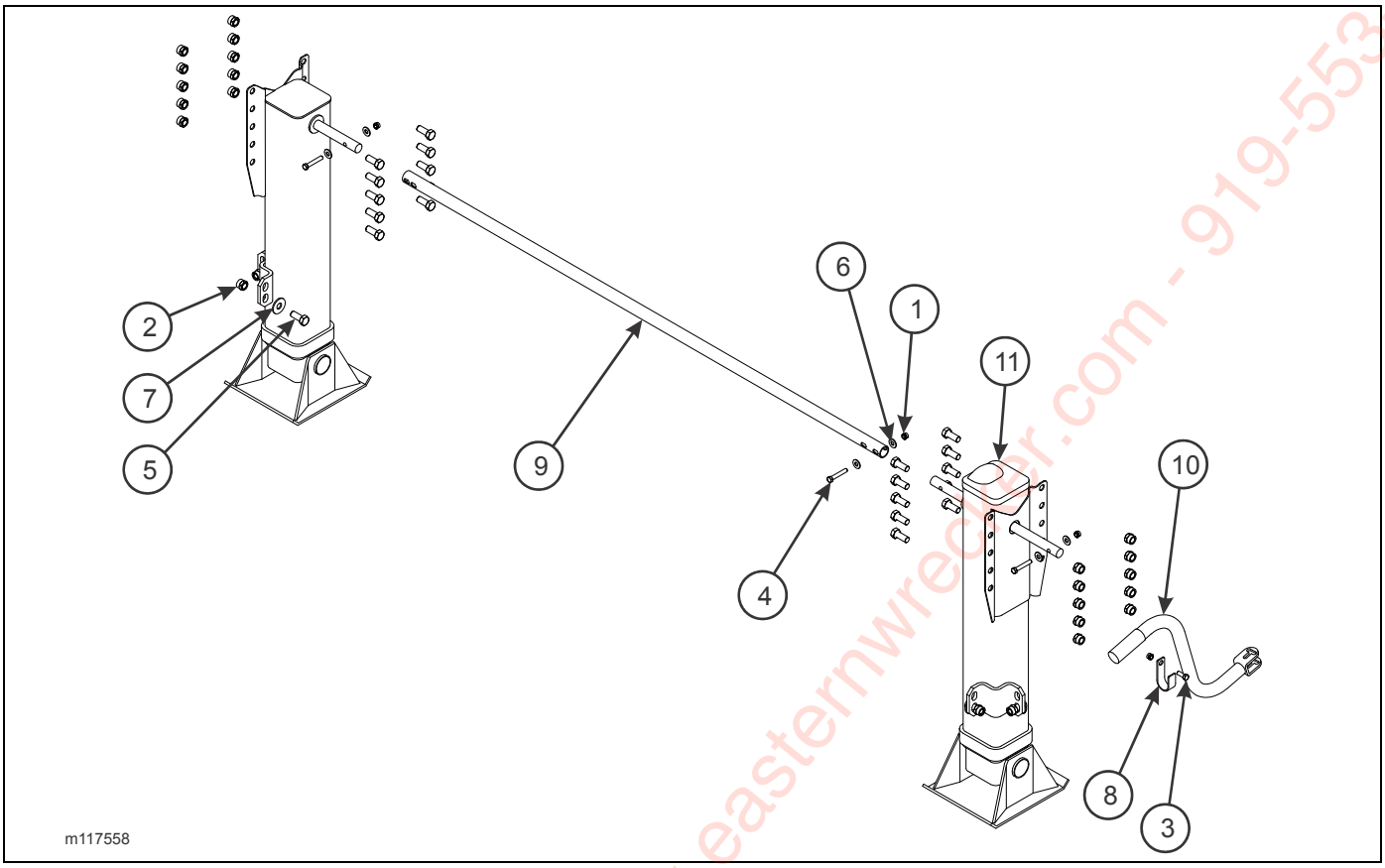

Figure 2-135: Landing Gear Installation

LANDING GEAR INSTALLATION

ITEM	PART NO.	DESCRIPTION	QTY.
	117558	LANDING GEAR INSTALLATION (102” WIDE)	
	133799	LANDING GEAR INSTALLATION (120” WIDE)	
	164120	LANDING GEAR INSTALLATION (108” WIDE)	
1	1-512-010005-05	NUT, HEX LOCK 3/8-16 GRB	4
2	1-512-010005-13	NUT, HEX LOCK 5/8-11 GRB	24
3	1-654-010051-05	SCREW, HEX HEAD CAP 3/8-16 X 1 GR5	1
4	1-654-010051-10	SCREW, HEX HEAD CAP 3/8-16 X 2-1/4 GR5	3
5	1-654-010059-03	SCREW, HEX HEAD CAP 5/8-11 X 1-1/2 GR5	24
6	1-861-010032-11	WASHER, FLAT 3/8W	6
7	1-861-010032-19	WASHER, FLAT 5/8W	4
8	117559	CLIP, LANDING GEAR HANDLE	1
9	117561	CROSS-SHAFT LANDING GEAR (117558)	1
	133798	CROSS SHAFT LANDING GEAR (133799)	1
	164121	CROSS SHAFT LANDING GEAR (164120)	1
10	119949	HANDLE, CRANK 2 SPEED LANDING GEAR	1
11	139256	LANDING GEAR WELDMENT, 2 SPEED (SEE PAGE 2-259)	1

Eastern Wrecker Sales, Inc. www.easternwrecker.com - 919-553-4038

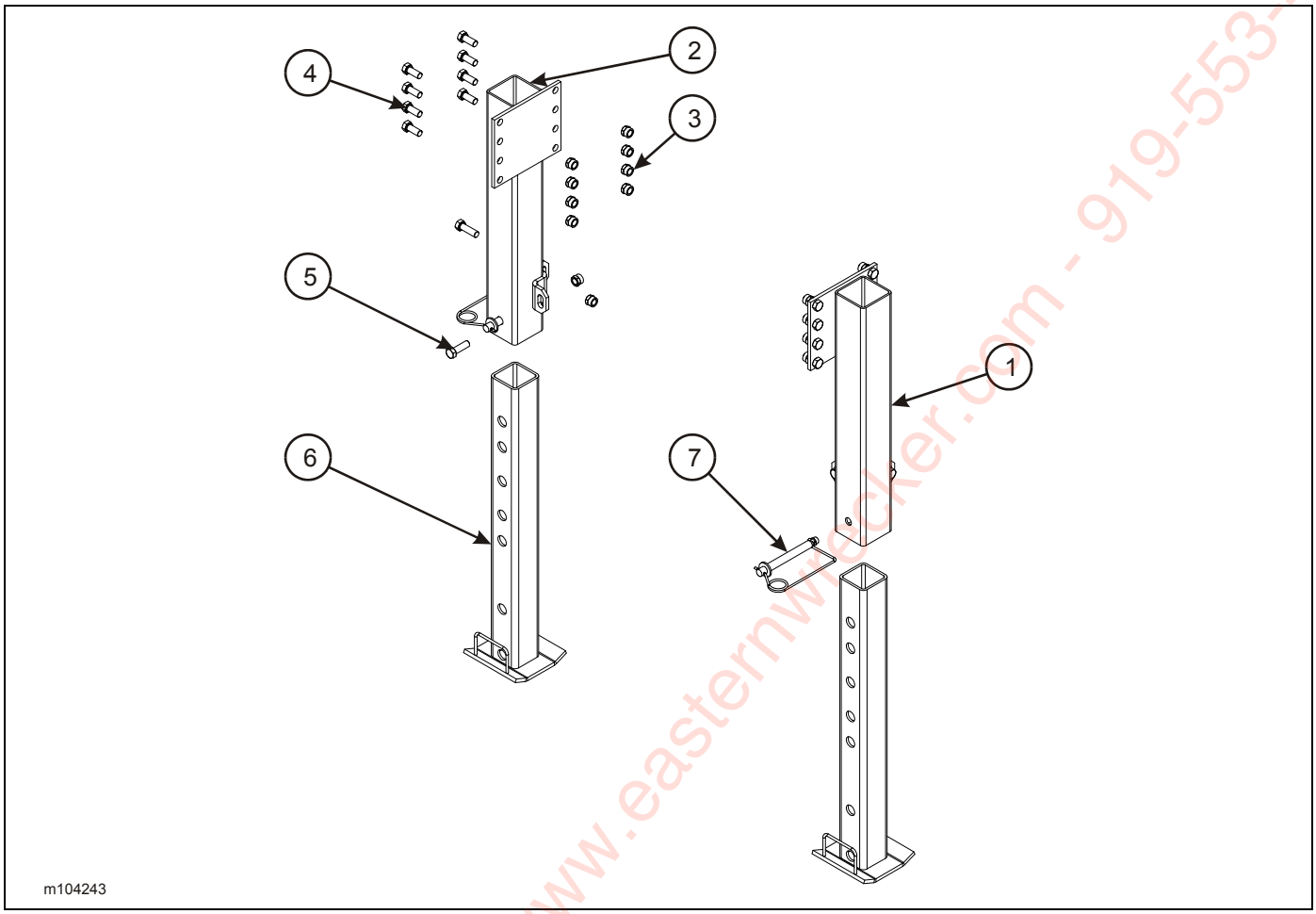

Figure 2-136: Landing Gear Installation

LANDING GEAR INSTALLATION BOLT - ON

ITEM	PART NO.	DESCRIPTION	QTY.
	104243	PARK STAND INST., BOLT-ON (ITEMS 1-7)	
1	112678	PARK STAND WELDMENT, LH FRONT PIN	1
2	112679	PARK STAND WELDMENT, RH FRONT PIN	1
3	1-512-010005-13	NUT, HEX LOCK 5/8-11 GRB	20
4	1-654-010059-03	SCREW, HEX HEAD CAP 5/8-11 X 1-1/2 GR5	16
5	1-654-010059-05	SCREW, HEX HEAD CAP 5/8-11 X 2 GR5	4
6	3-725-010058	STAND, PARK INSIDE WELDMENT	2
7	346SL	LOCK HITCH PIN	2

Eastern Wrecker Sales, Inc. www.easternwrecker.com - 919-553-4038

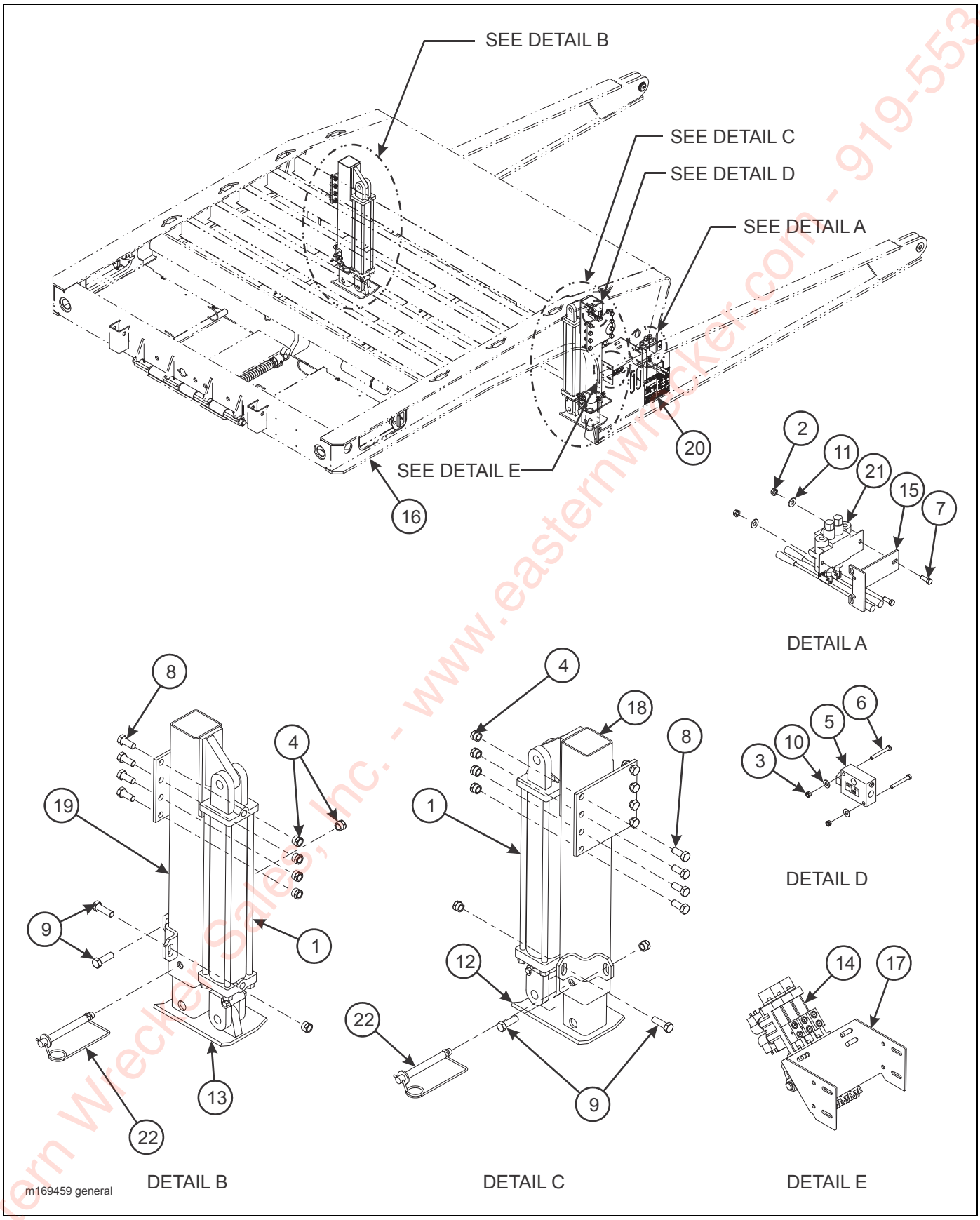

Figure 2-137: Hydraulic Park Stand Installation, General Items

Eastern Wrecker Sales, Inc. - www.easternwrecker.com - 919-553-4038

HYDRAULIC PARK STAND INSTALLATION, GENERAL ITEMS

ITEM	PART NO.	DESCRIPTION	QTY.
	129069	PARK STAND INSTALLATION, HYDRAULIC	
	169619	PARK STAND INSTALLATION, HYDRAULIC ARCTIC	
1	1-242-010180-2	CYLINDER, HYDRAULIC 3-1/2 X 20 3000 PSI (SEE PAGE 2-257)	2
2	1-510-010001	NUT, FLANGE LOCK 3/8-16	2
3	1-512-010005-03	NUT, HEX LOCK 5/16-18 GRB	2
4	1-512-010005-13	NUT, HEX LOCK 5/8-11 GRB	20
5	1-626-010002-06	REGULATOR, FLOW 1/2-6 GPM	1
6	1-654-010049-11	SCREW, HEX HEAD CAP 5/16-18 X 2-1/2 GR5	2
7	1-654-010051-05	SCREW, HEX HEAD CAP 3/8-16 X 1 GR5	2
8	1-654-010059-03	SCREW, HEX HEAD CAP 5/8-11X1-1/2 GR5	16
9	1-654-010059-05	SCREW, HEX HEAD CAP 5/8-11 X 2 GR5	4
10	1-861-010032-09	WASHER, FLAT 5/16W	2
11	1-861-010032-11	WASHER, FLAT 3/8W	2
12	104241	PARK STAND WELDMENT, HYDRAULIC LH LEG	1
13	104242	PARK STAND WELDMENT, HYDRAULIC RH LEG	1
14	-----	VALVE, 3 STACK MOTOR SOL	REF
15	121124	BRACKET, VALVE DOCK LEVEL CONTROL	1
16	-----	FRAME ASSEMBLY, G/N	REF
17	122474	VALVE MOUNT, CONTROL	1
18	129084	PARK STAND WELDMENT, HYDRAULIC LH	1
19	129085	PARK STAND WELDMENT, HYDRAULIC RH	1
20	3-573-010202	DECAL, DANGER/ OPERATION, DOCK LEVEL (SEE PAGE 2-5)	1
21	3-846-010056	VALVE, DOUBLE SPOOL STACK PARALLEL, PRIOR TO 01/15/2014	1
	179649	VALVE, DOUBLE SPOOL	1
22	346SL	LOCK, HITCH PIN	2

Eastern Wrecker Sales, Inc. - www.easternwrecker.com - 919-553-4038

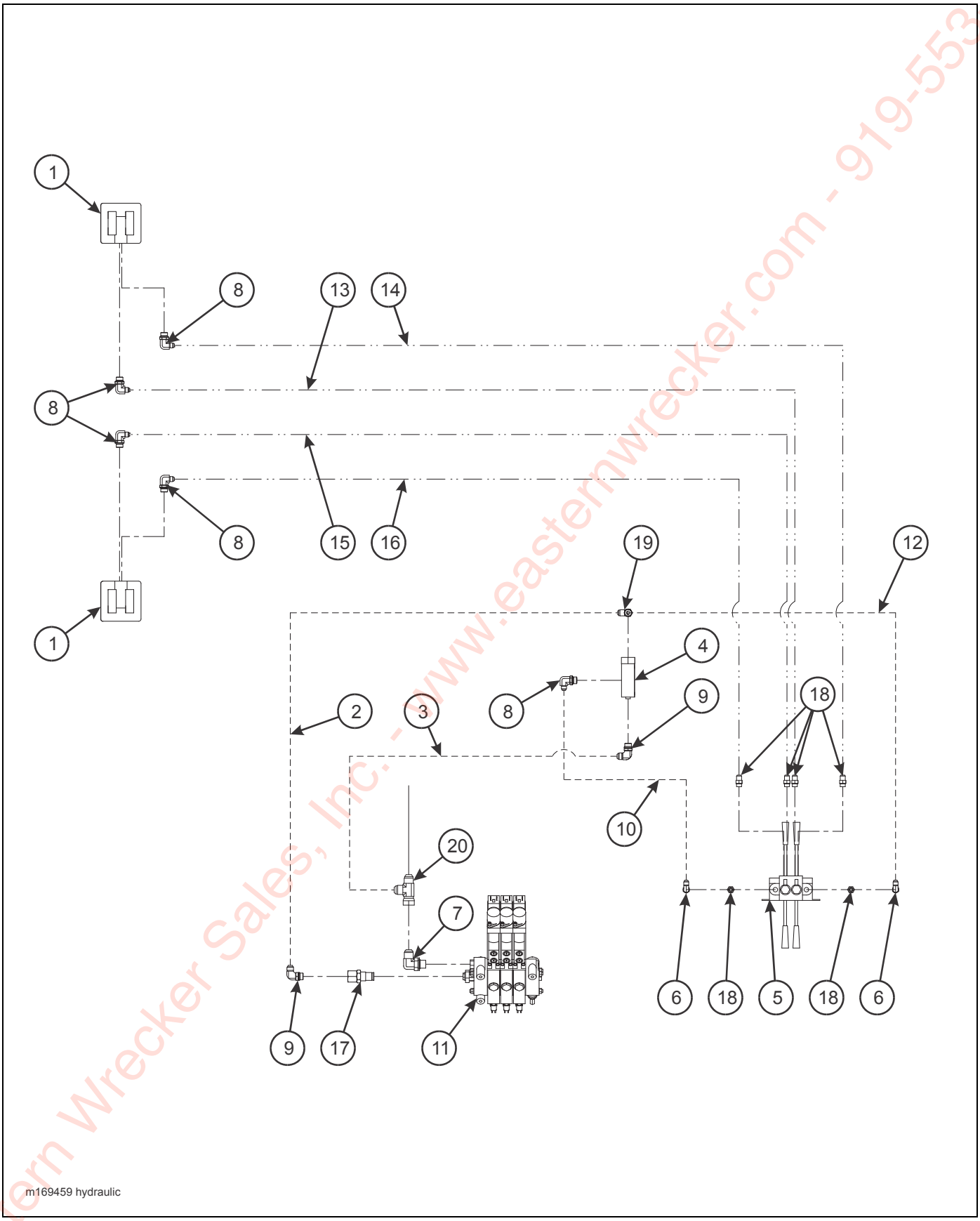

Figure 2-138: Hydraulic Park Stand Installation, Hydraulic Items

Eastern Wrecker Sales, Inc. - www.easternwrecker.com - 919-553-4038

HYDRAULIC PARK STAND INSTALLATION, HYDRAULIC ITEMS

ITEM	PART NO.	DESCRIPTION	QTY.	
	129069	PARK STAND INSTALLATION, HYDRAULIC	*	
	169619	PARK STAND INSTALLATION, HYDRAULIC ARCTIC		*
1	1-242-010180-2	CYLINDER, HYDRAULIC 3-1/2 X 20 3000 PSI (SEE PAGE 2-257)	REF	REF
2	1-397-010302018	HOSE ASSEMBLY, 1/2 X 18	1	--
	169620	HOSE ASSEMBLY, 1/2 X 18 ARCTIC	--	1
3	1-397-010306028	HOSE ASSEMBLY, 1/2 X 28	1	--
	169622	HOSE ASSEMBLY, 1/2 X 28 ARCTIC	--	1
4	1-626-010002-06	REGULATOR, FLOW 1/2-6 GPM	1	1
5	3-846-010056	VALVE, DOUBLE SPOOL STACK PARALLEL, PRIOR TO 01/15/2015	1	1
	179649	VALVE, DOUBLE SPOOL, AFTER 01/15/2014	1	1
6	102-0031	ADAPTER, 90	2	2
7	2062-10-12S	ADAPTER	2	2
8	2062-8-6S	ELBOW, 90	5	5
9	2062-8-8S	ADAPTER, 90	2	2
10	111302	HOSE ASSEMBLY 3/8 X 24	1	--
	169626	HOSE ASSEMBLY 3/8 X 24	--	1
11	-----	VALVE, 3 STACK MOTOR SOL	REF	REF
12	116429	HOSE ASSEMBLY 3/8 X 25	1	--
	169624	HOSE ASSEMBLY 3/8 X 25 ARCTIC	--	1
13	116488	HOSE ASSEMBLY 3/8 X 136	1	--
	169630	HOSE ASSEMBLY 3/8 X 136 ARCTIC	--	1
14	123490	HOSE ASSEMBLY, 3/8 X 113	1	--
	169629	HOSE ASSEMBLY, 3/8 X 113 ARCTIC	--	1
15	129088	HOSE ASSEMBLY 3/8 X 60	1	--
	169627	HOSE ASSEMBLY 3/8 X 60 ARCTIC	--	1
16	135189	HOSE ASSEMBLY 3/8 X 84	1	--
	169628	HOSE ASSEMBLY 3/8 X 84 ARCTIC	--	1
17	138179	POWER BEYOND REMOTE	1	--
18	202702-6-6S	ADAPTER, STRAIGHT	6	6
19	203005-8-8S	ADAPTER, TEE	1	1
20	203102-12-12S	ADAPTER, TEE	1	1

Eastern Wrecker Sales, LLC - www.easternwrecker.com - 919-553-4038

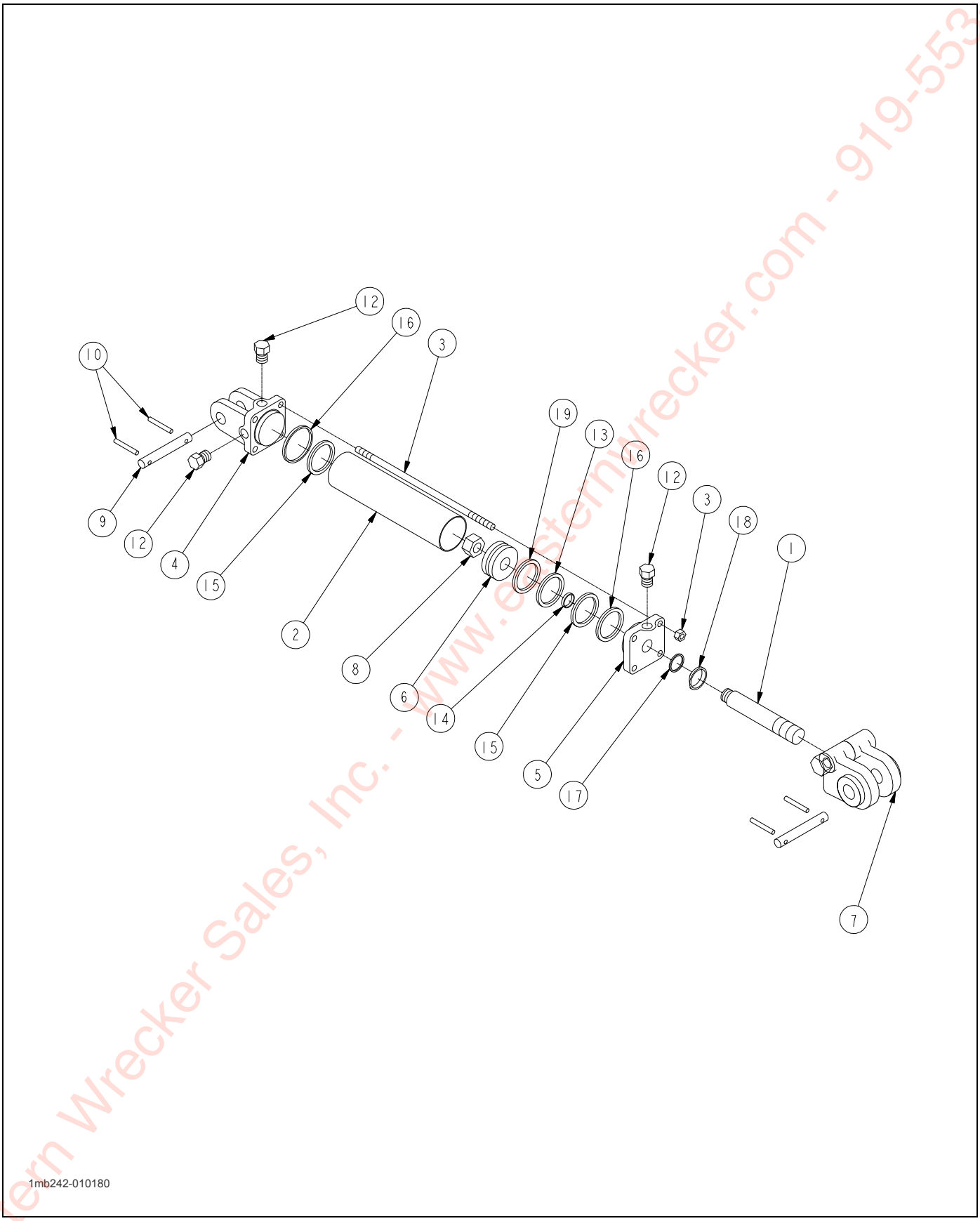

Figure 2-139: Hydraulic Cylinder 3-1/2 x 20

Eastern Wrecker Sales, Inc. - www.easternwrecker.com - 919-553-4038

HYDRAULIC CYLINDER 3-1/2 X 20

ITEM	PART NO.	DESCRIPTION	QTY.
	1-242-010180-2	CYLINDER, HYDRAULIC 3-1/2” X 20" (PRINCE SAE 33520)	
1	010700437	PISTON ROD	1
2	-----	TUBE	1
3	-----	TIEROD ASSEMBLY	4
4	-----	BUTT	1
5	111870	GLAND ASSEMBLY	1
6	-----	PORT PLUG	1
7	-----	PISTON	1
8	-----	CLEVIS ASSEMBLY	1
9	-----	LOCKNUT	1
10	-----	CLEVIS PIN	2
11	-----	CLEVIS PIN RETAINER	4
12	*	CROWN SEAL	1
13	*	O-RING	1
14	*	O-RING	2
15	*	BU-WASHER	2
16	*	U-CUP	1
17	*	WIPER	1
	1-242-010178-2	PACKING KIT (CONTAINS ALL NECESSARY SEALS AND O-RINGS) (ITEMS 13 - 18)	1

*PARTS AVAILABLE IN PACKING KIT ONLY.

Eastern Wrecker Sales, Inc. - www.easternwrecker.com - 919-553-4038

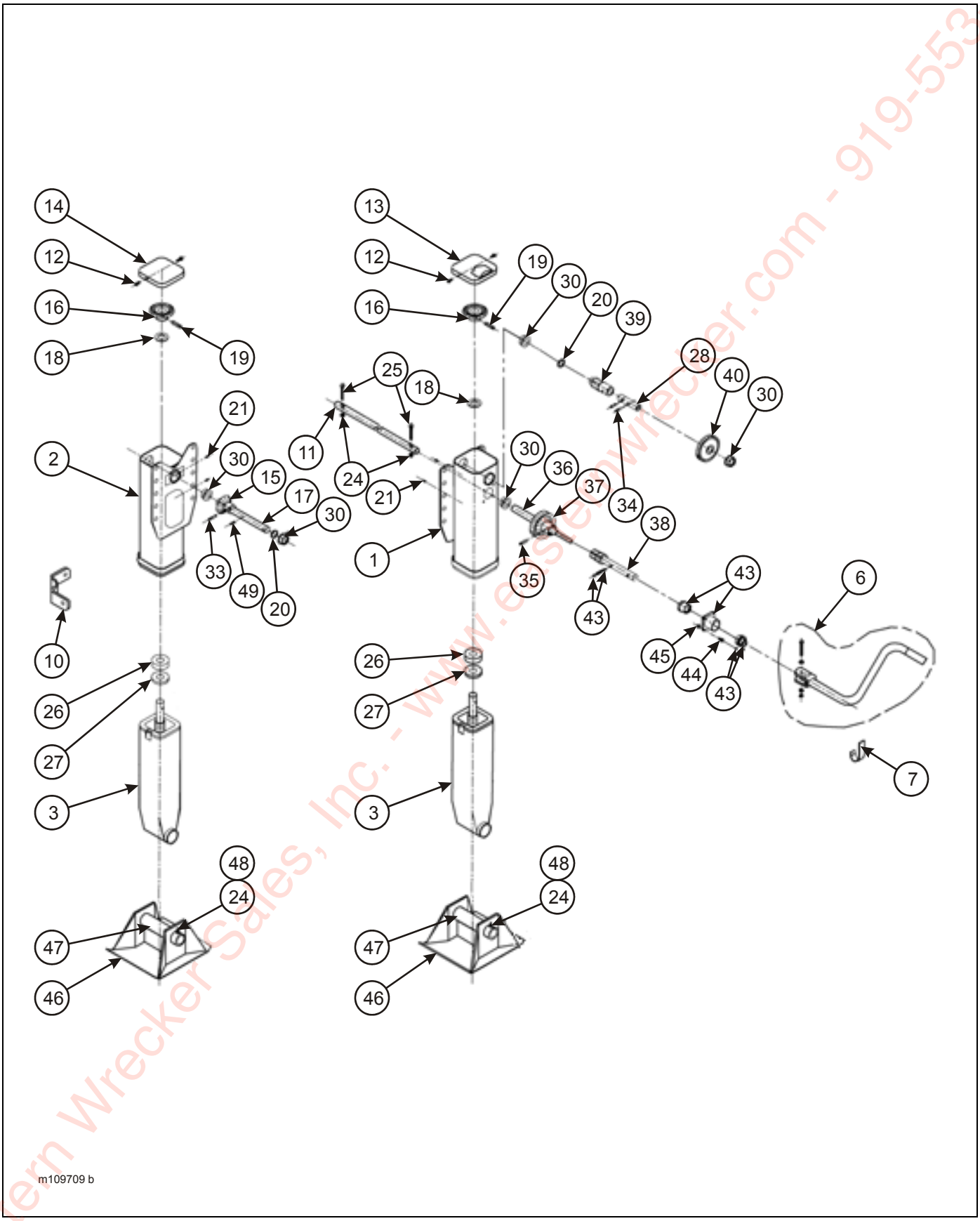

Figure 2-140: Crank Landing Gear

Eastern Wrecker Sales, Inc. - www.easternwrecker.com - 919-553-4038

CRANK LANDING GEAR

ITEM	PART NO.	REFERENCE NO.	DESCRIPTION	QTY.
	116800		LANDING GEAR (JOST #A401T19)	
1	-----	D10201.3	OUTER HOUSING - 2 SPEED	1
2	-----	D10116.3	OUTER HOUSING - 1 SPEED	1
3	-----	C10140.3	INNER LEG ASSEMBLY - STANDARD	2
6	109161	-----	CRANK 930 MODIFICATION	1
7	109711	B10261	CRANK HANGER	1
10	109712	C10108	BRACE LUG - W	2
11	-----	B10066	INTERMEDIATE CROSS SHAFT	1
12	-----	A10059.1	COVER SCREW	4
13	-----	C10217	COVER - 2 SPEED	1
14	-----	C10259	COVER - 1 SPEED	1
15	-----	C10177	PINION GEAR	1
16	-----	C10155	BEVEL GEAR	2
17	-----	B10130	PINION SHAFT - 1 SPEED	1
18	-----	A10102	THRUST WASHER	2
19	-----	A10052.3	GROOVED PIN	2
20	-----	A10218	SPACER WASHER	2
21	-----	A10040	GREASE FITTING	4
23	-----	C10209	STRUT BRACE (NOT SHOWN)	4
24	-----	A10038.7	SELF LOCKING NUT	2
25	-----	A10037.1	CROSS SHAFT BOLT - 3/8 X 2 GR5	2
26	-----	A10033	THRUST BEARING	2
27	-----	A10101	COLLAR	2
28	-----	A10212	OUTPUT SHAFT	1
30	-----	A10255	BUSHING	5
33	-----	A10054.3	ROLL PIN 3/8 X 1-1/2	1
34	-----	A10260.1	SPIRAL PIN	2
35	-----	A10054.7	ROLL PIN - 3/8 X 1-3/4	1
36	-----	B10236	OUTPUT CLUSTER SHAFT	1
37	-----	C10234	OUTPUT CLUSTER GEAR	1
38	-----	C10233	INPUT GEAR SHAFT	1
39	-----	C10078	OUTPUT SPUR GEAR	1
40	-----	C10085	INPUT SPUR GEAR	1
43	163502	B10229S	SHIFT HOUSING SERVICE KIT	1
44	-----	A10230	SHIFT HOUSING BOLT	4
45	-----	A10038.6	SELF LOCKING NUT	4
46	-----	C10256	SHOE - 10 X 10 X 4-1/2	2
47	114983	B10036	SHOE AXLE	2
48	-----	A10037.3	HEX HEAD BOLT	2
49	-----	A10054.6	ROLL PIN - 1/4 X 1-1/4	1
50	137974	A401LT19	RH LANDING LEG ASSEMBLY	1

Eastern Wrecker Sales, Inc. www.easternwrecker.com - 919-553-4038

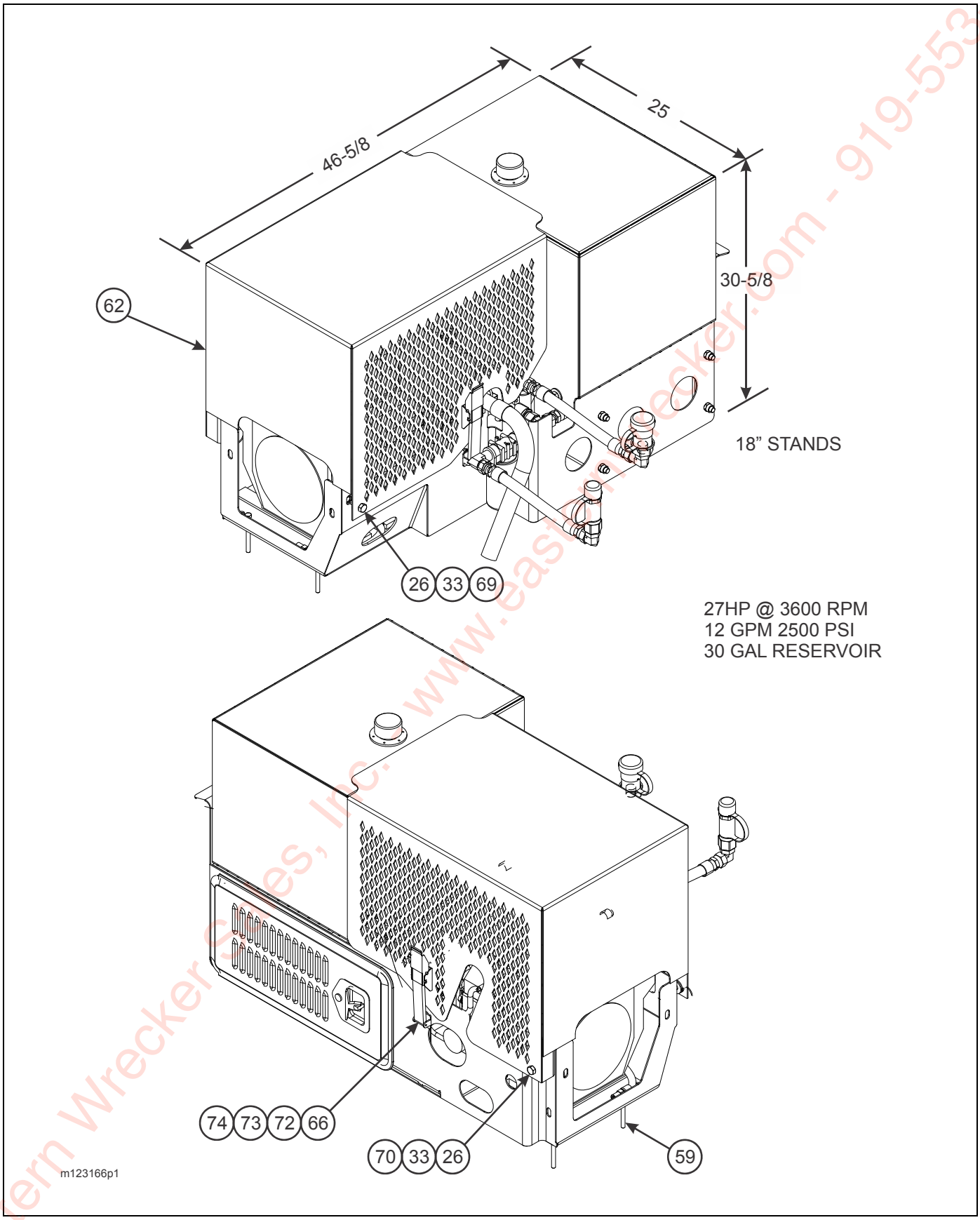

Figure 2-141: Upper Deck Engine Installation (1 of 4)

Eastern Wrecker Sales, Inc. www.easternwrecker.com - 919-553-4038

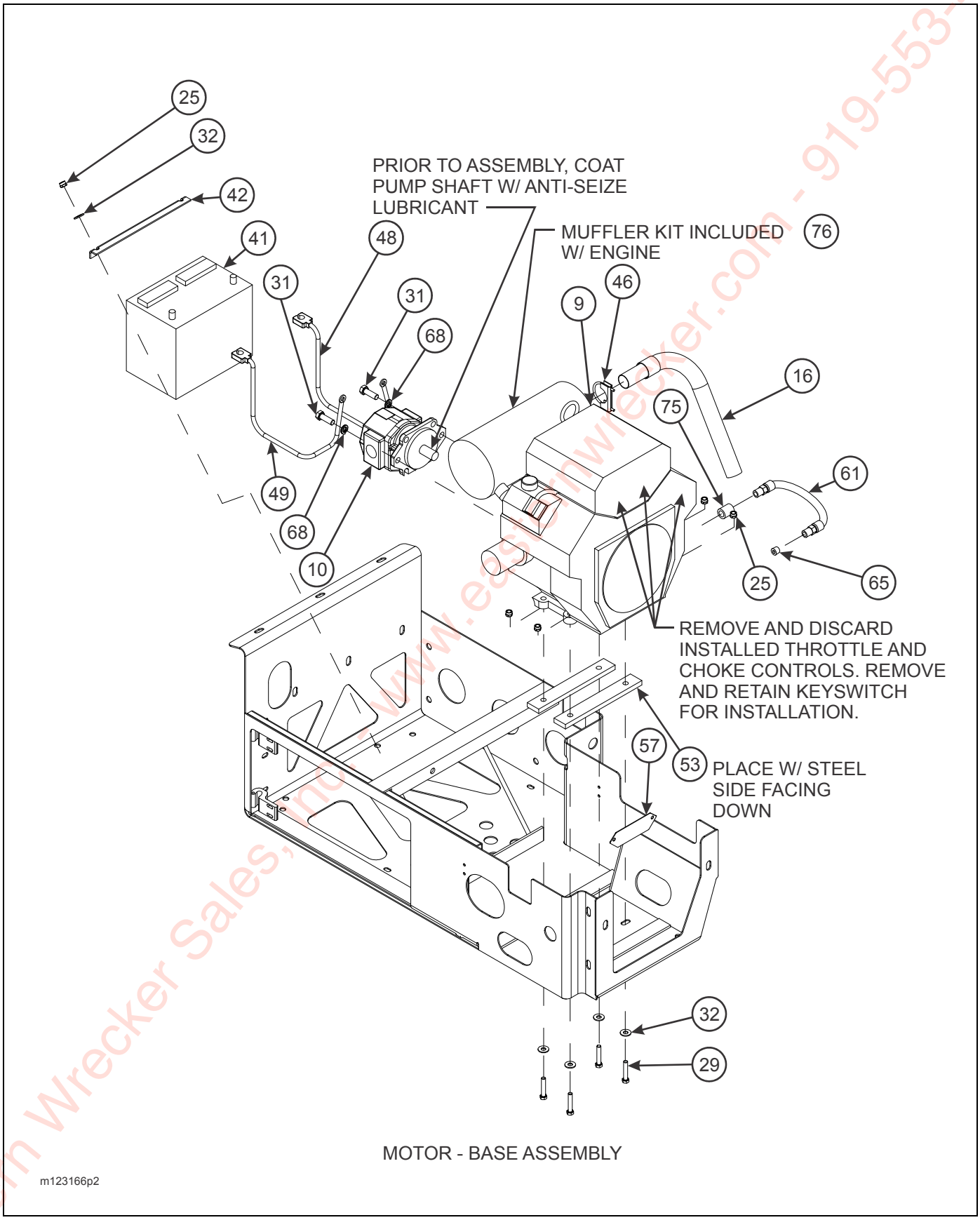

Figure 2-142: Upper Deck Engine Installation (2 of 4)

Eastern Wrecker Sales, Inc. - www.easternwrecker.com - 919-553-4038

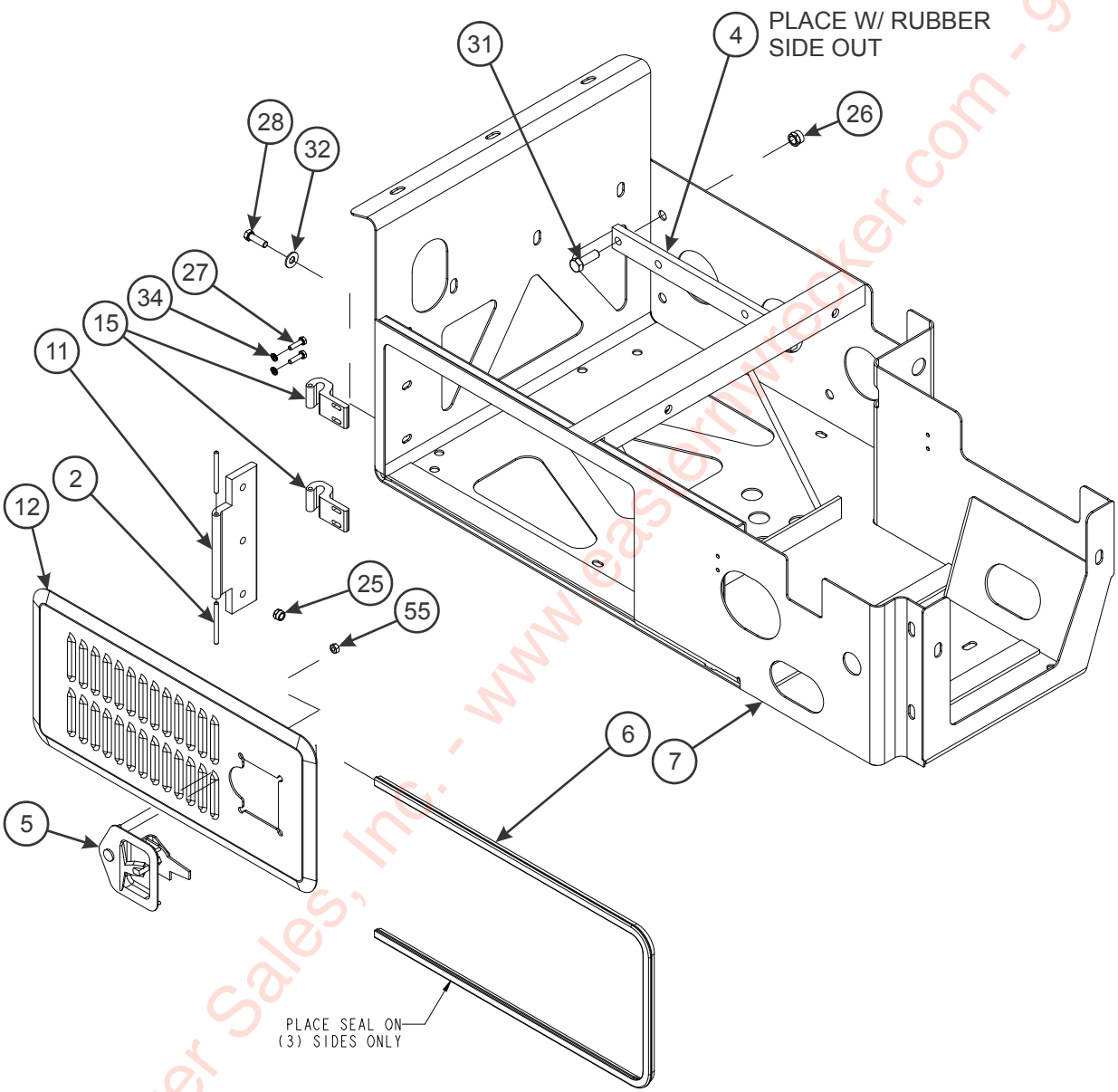

Figure 2-143: Upper Deck Engine Installation (3 of 4)

Eastern Wrecker Sales, Inc. - www.easternwrecker.com - 919-553-4038

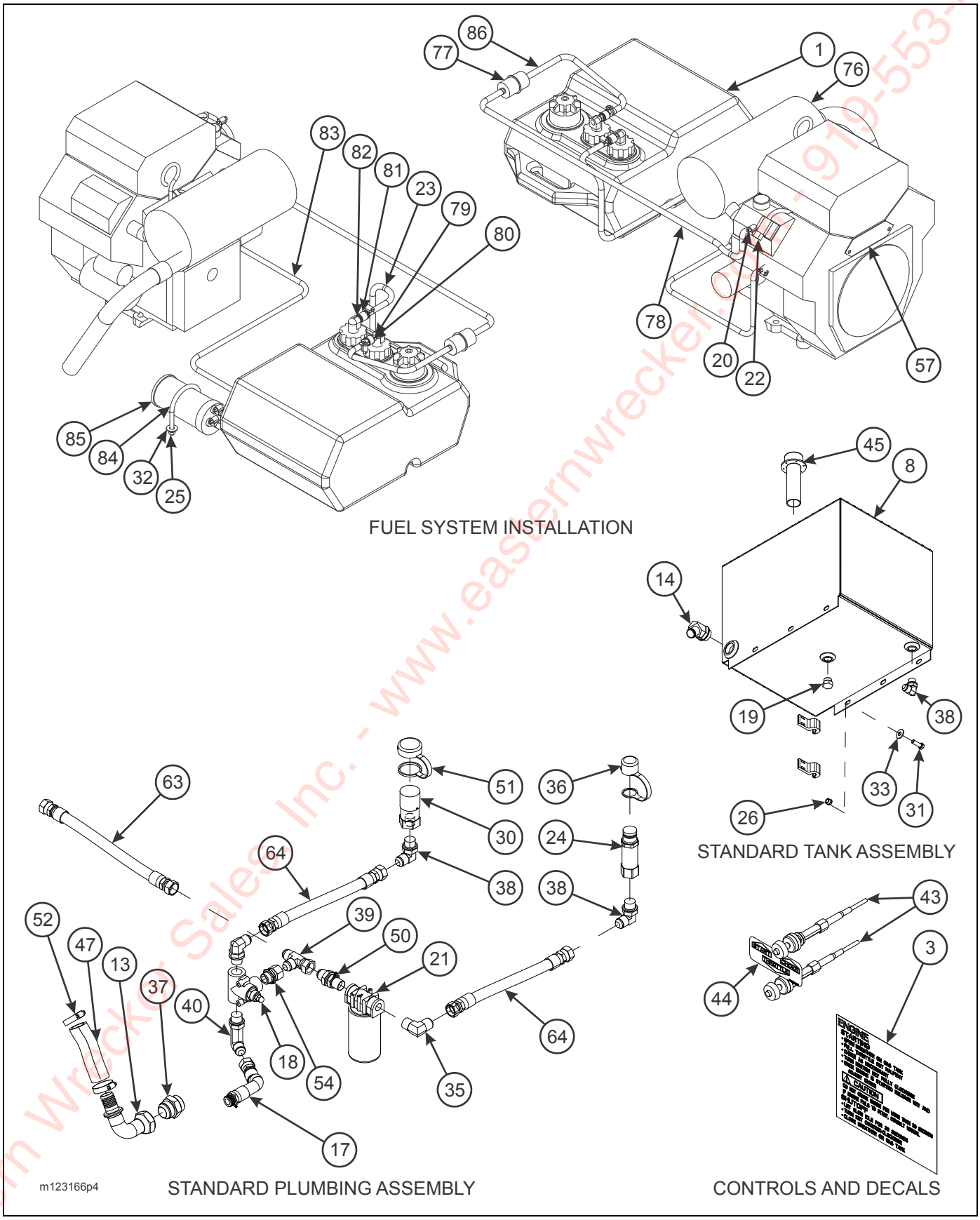

Figure 2-144: Upper Deck Engine Installation (4 of 4)

Eastern Wrecker Sales, Inc. - www.easternwrecker.com - 919-553-4038

25 HP GAS ENGINE PACKAGE, UPPER DECK (OPTION)

ITEM	PART NO.	DESCRIPTION	QTY.
	123166	25HP GAS ENGINE PACKAGE	
1	169531	TANK, FUEL PLASTIC 6 GAL LOW PERM	1
2	108601	PIN, DOOR HINGE	2
3	113388	DECAL, ENGINE PACKAGE INSTRUCTIONS	1
4	113856	MOUNT, ENGINE ISOLATOR, KOHLER CH25	2
5	114814	LATCH, FOLDING T LOCKABLE	1
6	114815	SEAL, SPONGE RUBBER TRIM	5
7	120654	MOUNT WELDMENT, ENGINE PACKAGE 25 HP	1
8	129264	HYDRAULIC TANK WELDMENT	1
9	127813	ENGINE, KOHLER 27 HP PUMP MOUNT	1
	3-765-010050	KOHLER IGNITION SWITCH	1
10	115888	PUMP, HYDRAULIC **(BEFORE 11-14-2014)**	1
	186811	PUMP, HYDRAULIC, 0.88 CID GEAR **(AFTER 11-14-2014)**	1
11	116326	HINGE, BASE MOUNT	1
12	116328	MOUNT, DOOR WELDMENT	1
13	116330	FITTING, 90	1
14	117873	FITTING, 45	1
15	119206	HINGE, DOOR	2
16	119445	EXHAUST EXT WELDMENT	1
17	119577	HOSE	1
18	120661	VALVE, HYDRAULIC PRESSURE RELIEF	1
19	900598-12S	PLUG, O-RING	1
20	105-0105	CLAMP, HOSE	6
21	1-295-010001	RETURN LINE FILTER	1
	1-295-010002	FILTER ELEMENT	1
22	1-297-010034-01	FITTING, BR 90 BARB	1
23	1-316-010013	HOSE, 1/4 LOW PRESSURE FUEL LINE	5
24	105479	COUPLER FLAT FACE MALE NOSE	1
25	1-512-010005-05	NUT, HEX LOCK 3/8-16 GRB	15
26	1-512-010005-09	NUT, HEX LOCK 1/2-13 GRB	11
27	1-654-010047-06	SCREW, HEX HEAD CAP 1/4-20 X 1 GR5	4
28	1-654-010051-06	SCREW, HEX HEAD CAP 3/8-16 X 1-1/4 GR5	3
29	1-654-010051-09	SCREW, HEX HEAD CAP 3/8-16 X 2 GR5	6
30	105480	COUPLER, FLAT FACE FEMALE BODY	1
31	1-654-010055-03	SCREW, HEX HEAD CAP 1/2-13 X 1-1/2 GR5	11
32	1-861-010032-11	WASHER, FLAT 3/8W	19
33	1-861-010032-15	WASHER, FLAT 1/2W	13
34	1-861-010034-09	WASHER, SPLIT LOCK 1/4	4
35	2024-12-12S	ELBOW, 90	1
36	105481	COUPLER, DUST CAP MALE	1
37	202702-20-20S	ADAPTER (**BEFORE 11-14-2015)**	1
	119553	CONNECTOR, O-RING/37° **(AFTER 11-14-2015)**	1
38	2062-12-12S	ADAPTER, 90	4
39	203102-12-12S	ADAPTER, TEE	1
40	206209-12-12S	ADAPTER, 90	1
41	2481X	BATTERY 12V	1
42	3-120-010124	BATTERY CLAMP BRACKET	1
43	128774	CABLE, THROTTLE	2
44	3-573-010506	DECAL, ENGINE CONTROL	1

Eastern Wrecker Sales, Inc. - www.easternwrecker.com - 919-553-4038

25 HP GAS ENGINE PACKAGE, UPPER DECK (OPTION)

ITEM	PART NO.	DESCRIPTION	QTY.
45	3-162-010001	FILLER-BREATHER-STRAINER ASSEMBLY	1
46	3-182-010028	CLAMP, MUFFLER	1
47	3-399-010001006	HOSE, 1-1/4 SUCTION	1
48	514-9045-26	CABLE ASSEMBLY, BATTERY POSITIVE	1
49	514-9073-18	CABLE ASSEMBLY, BATTERY NEGATIVE	1
50	2240-12-12S	ADAPTER, BULKHEAD	1
51	105482	COUPLER, DUST FEMALE	1
52	1-181-010046-7	CLAMP, HOSE	2
53	120659	ISOLATOR, KOHLER 25 HP MOUNT	2
54	120660	ADAPTER	1
55	115877	NUT, HEAVY HEX 1/4-20 GR5	4
57	123014	PLATE, MOTOR FRONT 25 HP	1
58	113544	HARNESS, ENGINE PACKAGE IGNITION (NOT SHOWN)	2
59	108295	SCREW, HEX HEAD CAP 3/8-16 X 4 GR5	2
61	1-397-010312032	HOSE ASSEMBLY 3/8 X 32	1
62	129287	COVER WELDMENT	1
63	1-397-010304018	HOSE ASSEMBLY 3/4 X 18	1
64	1-397-010304060	HOSE ASSEMBLY 3/8 X 60	2
65	1-560-010002-03	PLUG, PIPE 3/8	1
66	1-512-010004-03	NUT, HEX LOCK 10-24 GRA	8
68	1-861-010034-13	WASHER, SPLIT LOCK 1/2	2
69	1-654-010055-02	SCREW, HEX HEAD CAP 1/2-13 X 1-1/4 GR5	1
70	1-654-010055-09	SCREW, HEX HEAD CAP 1/2-13 X 3 GR5	1
72	110-0116	SCREW, RD HEAD CAP 10-24 X 3/4	8
73	110-0253	WASHER, FLAT 3/16	8
74	3-443-010018	LATCH, FLEXIBLE DRAW, LEVER ASSIST	2
75	3/8 P COUPLING	PIPE COUPLING 3/8 BLACK	1
76	128501	REPLACEMENT MUFFLER KIT	1
77	142270	FUEL FILTER	1
78	169532	HOSE, FUEL 1/4 LOW PERM CARB	5
79	170109	FITTING	1
80	170110	FITTING	1
81	170111	FITTING	1
82	170112	FITTING	1
83	3-316-010008	FUEL HOSE 3/16 ID	5
84	110578	U-BOLT, FENDER MOUNT	1
85	166766	CARBON CANISTER, FUEL TANK	1
86	139553	COUPLER, FUEL TANK	1

Eastern Wrecker Sales, Inc. www.easternwrecker.com - 919-553-4038

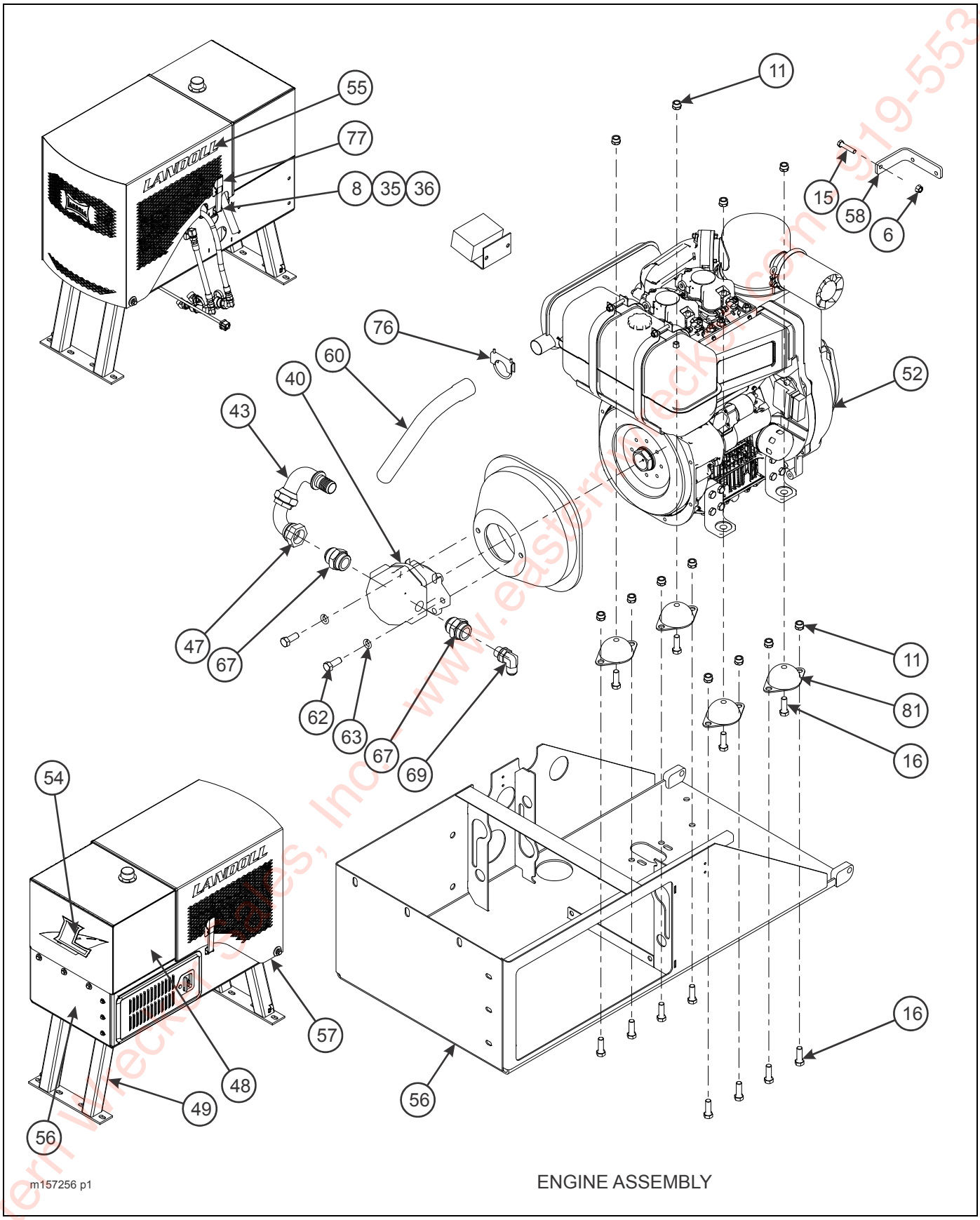

Figure 2-145: 25HP Diesel Engine Installation (1 of 4)

Eastern Wrecker Sales, Inc. www.easternwrecker.com 919-553-4038

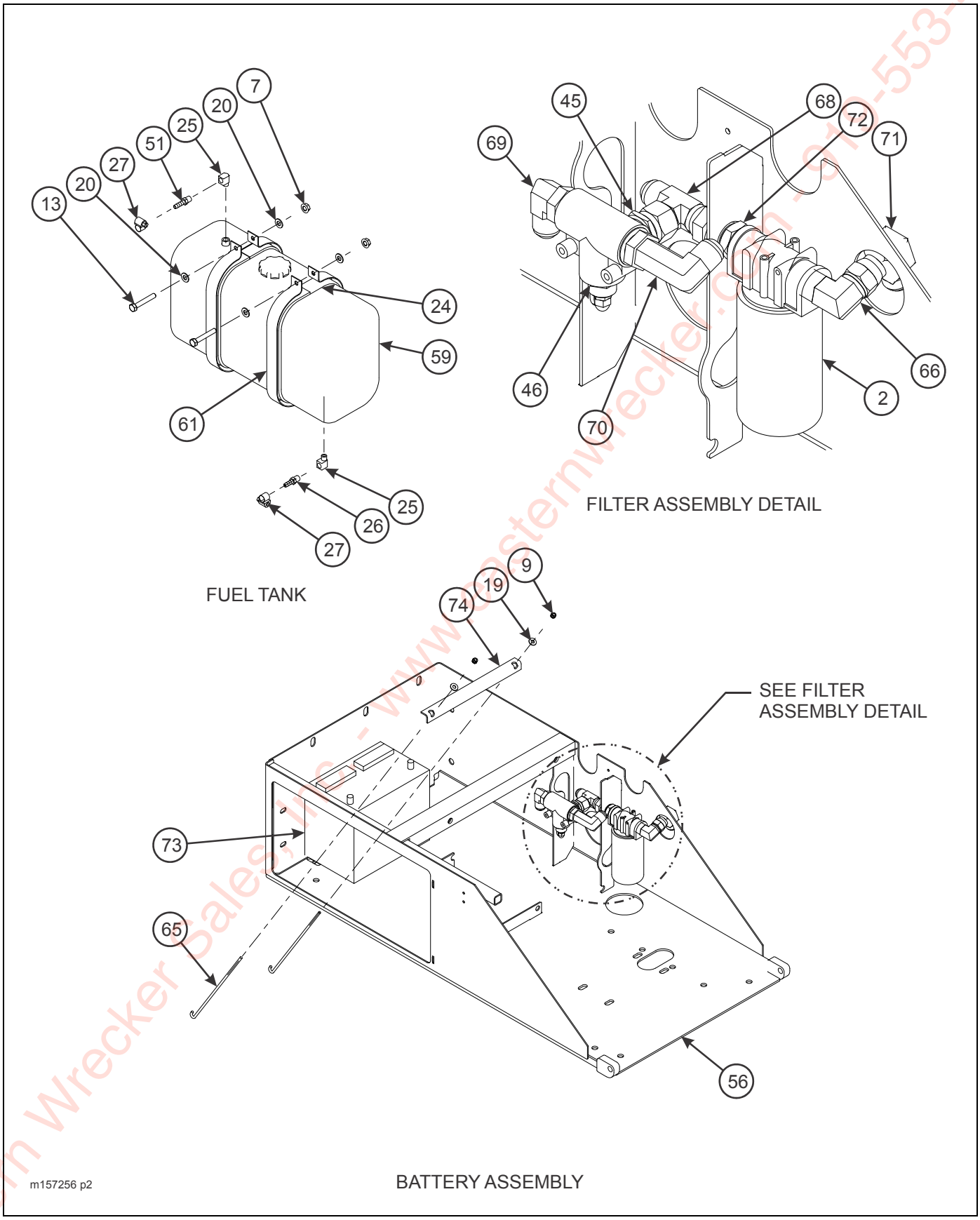

Figure 2-146: 25HP Diesel Engine Installation (2 of 4)

Eastern Wrecker Sales, Inc. - www.easternwrecker.com - 610-553-4038

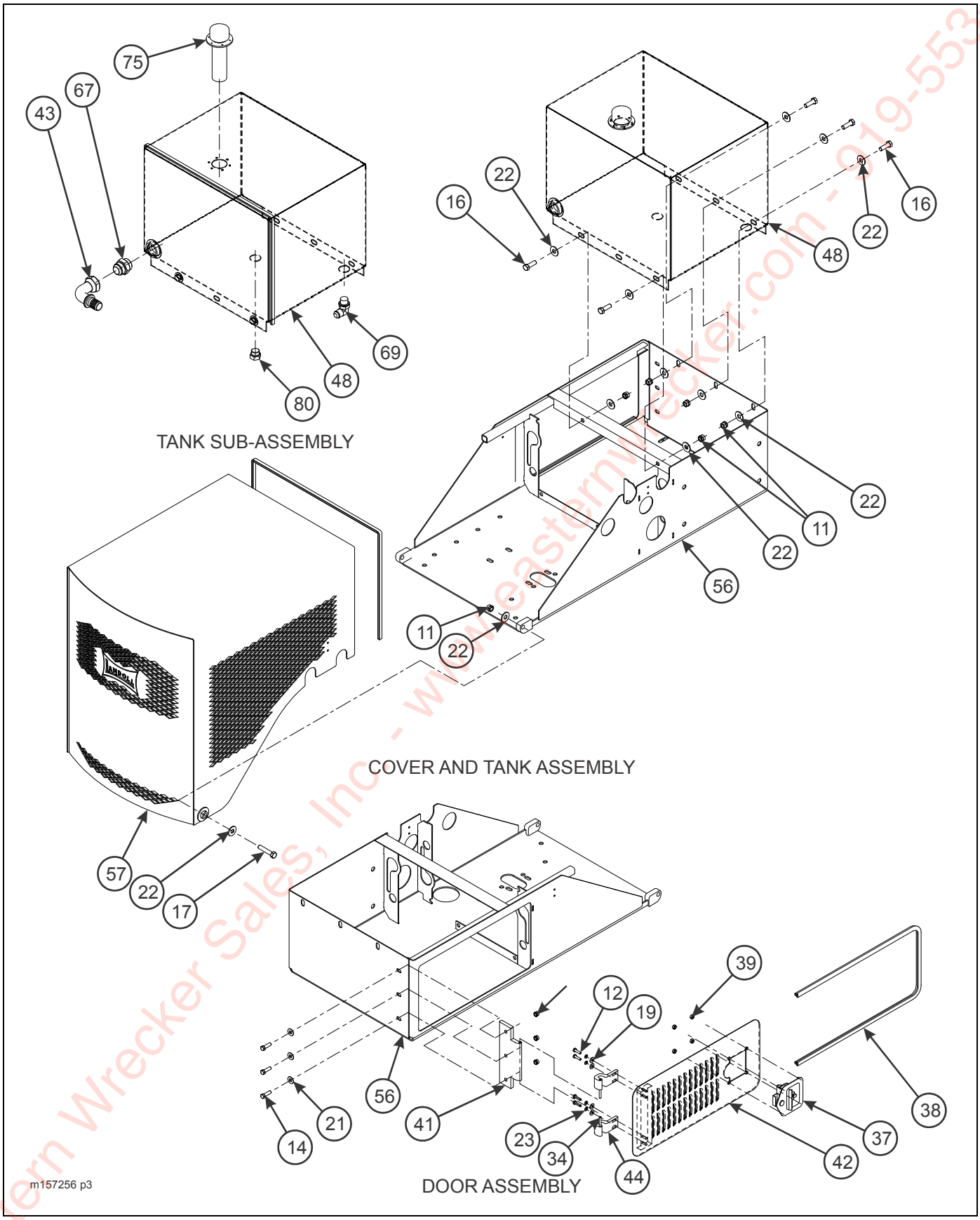

Figure 2-147: 25HP Diesel Engine Installation (3 of 4)

Eastern Wrecker Sales, Inc. - www.easternwrecker.com - 919-553-4038

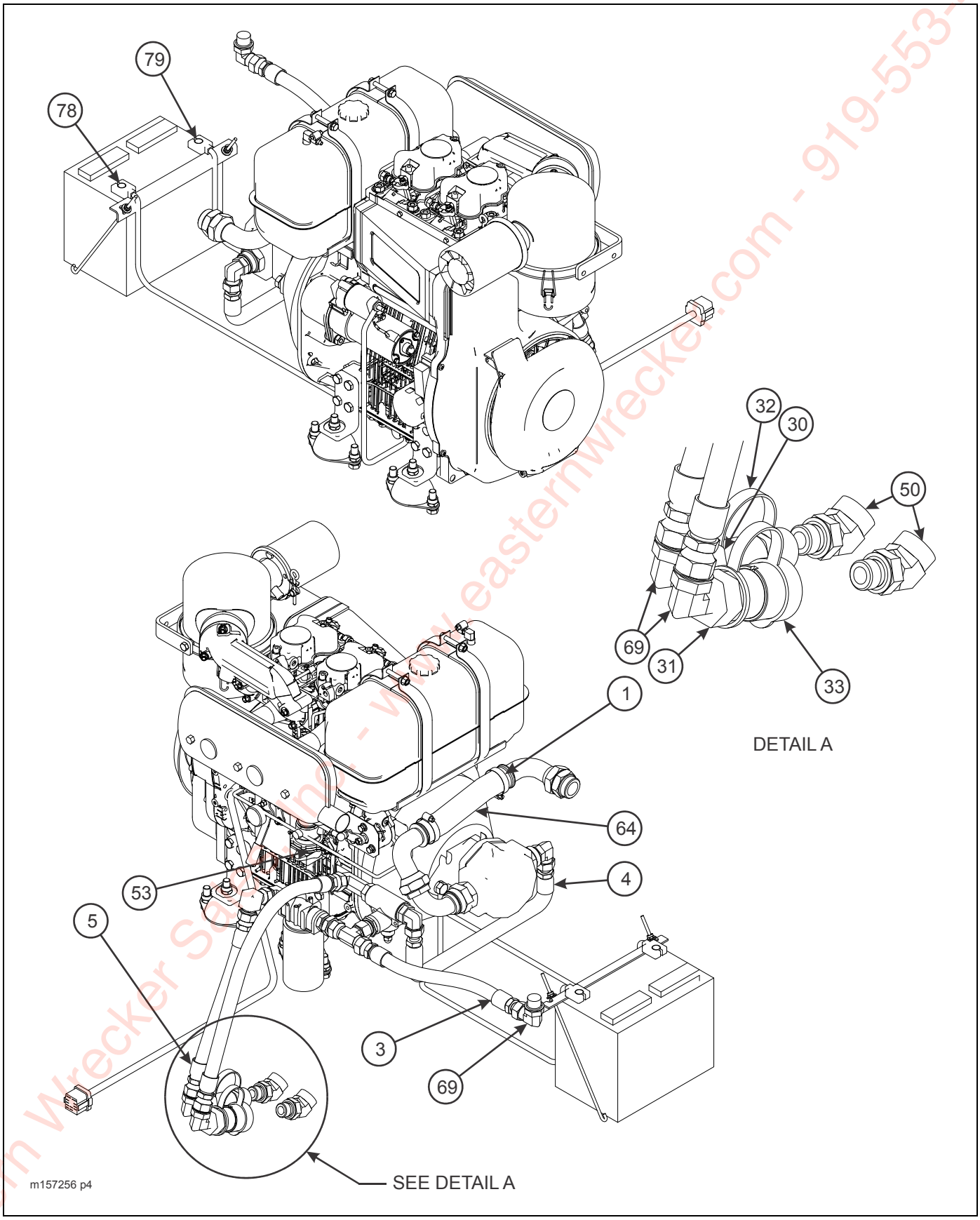

Figure 2-148: 25HP Diesel Engine Installation (4 of 4)

Eastern Wrecker Sales, Inc. - www.easternwrecker.com - 919-553-4038

25HP DIESEL ENGINE PACKAGE

ITEM	PART NO.	DESCRIPTION	QTY.
	157256	25HP DIESEL ENGINE PACKAGE	
1	1-181-010046-7	CLAMP, HOSE	2
2	1-295-010001	RETURN LINE FILTER	1
3	1-295-010002	FILTER ELEMENT	1
	1-397-010304018	HOSE ASSEMBLY 3/4 X 18	1
4	1-397-010304025	HOSE ASSEMBLY 3/4 X 25	1
5	1-397-010304060	HOSE ASSEMBLY 3/4 X 60	2
6	1-510-010001	NUT, FLANGE HEAD SERRATED 3/8-16	1
7	1-510-010004-03	NUT, FLANGE HEAD SPIRALOCK 5/16-18	2
8	1-512-010004-03	NUT, HEX LOCK 10-24 GRA	8
9	1-512-010005-01	NUT, HEX LOCK 1/4-20 GRB	2
10	1-512-010005-05	NUT, HEX LOCK 3/8-16 GRB	13
11	1-512-010005-09	NUT, HEX LOCK 1/2-13 GRB	11
12	1-654-010047-06	SCREW, HEX HEAD CAP 1/4-20 X 1 GR5	6
13	1-654-010049-09	SCREW, HEX HEAD CAP 5/16-18 X 2 GR5	2
14	1-654-010051-06	SCREW, HEX HEAD CAP 3/8-16 X 1-1/4 GR5	3
15	1-654-010051-08	SCREW, HEX HEAD CAP 3/8-16 X 1-3/4 GR5	6
16	1-654-010055-03	SCREW, HEX HEAD CAP 1/2-13 X 1-1/2 GR5	17
17	1-654-010055-07	SCREW, HEX HEAD CAP 1/2-13 X 2-1/2 GR5	2
18	1-822-010002	TRIM-LOK 3/16 (NOT SHOWN)	6
19	1-861-010032-07	WASHER, FLAT 1/4W	6
20	1-861-010032-08	WASHER, FLAT 5/16N	4
21	1-861-010032-11	WASHER, FLAT 3/8W	3
22	1-861-010032-15	WASHER, FLAT 1/2W	14
23	1-861-010034-09	WASHER, SPLIT LOCK 1/4	4
24	10030	SEAL, BAR STOCK NEOPRENE SPONGE	AR
25	101528	ELBOW, BRASS PIPE STREET	2
26	102-0511	HOSE BARB	1
27	105-0105	CLAMP, HOSE	2
30	105479	COUPLER FLAT FACE MALE NOSE	1
31	105480	COUPLER, FLAT FACE FEMALE BODY	1
32	105481	COUPLER, DUST CAP MALE	1
33	105482	COUPLER, DUST FEMALE	1
34	108601	PIN, DOOR HINGE	2
35	110-0116	SCREW, RD HEAD CAP 10-24 X 3/4	8
36	110-0253	WASHER, FLAT 3/16	8
37	114814	LATCH, FOLDING T LOCKABLE	1
38	114815	SEAL, SPONGE RUBBER TRIM	5
39	115877	NUT, HEAVY HEX 1/4-20 GR5	4
40	115888	PUMP, HYDRAULIC **(BEFORE 11-14-2014)**	1
	186811	PUMP, HYDRAULIC, 0.88 CID GEAR **(AFTER 11-14-2014)**	
41	116326	HINGE, BASE MOUNT	11
42	116328	MOUNT, DOOR WELDMENT	1
43	116330	FITTING, 90	1
44	119206	HINGE, DOOR	2
45	120660	ADAPTER	1
46	120661	VALVE, HYDR PRESSURE RELIEF	1
47	12412300-08	ADAPTER	1
48	129264	HYDRAULIC TANK WELDMENT	1

Eastern Wrecker Sales, Inc. - www.easternwrecker.com - 919-553-4038

25HP DIESEL ENGINE PACKAGE

ITEM	PART NO.	DESCRIPTION	QTY.
49	134857	MOUNT WELDMENT, ENG PACKAGE	REF
50	138209	ADAPTER, HYDRAULIC 45	2
51	144736	HOSE BARB	1
52	148267	ENGINE, KOHLER 25HP DIESEL	1
	3-765-010050	KOHLER IGNITION SWITCH	1
	169216	FILTER, FUEL KOHLER DIESEL	1
53	148268	THROTTLE KIT, KOHLER DIESEL	1
54	153751	DECAL, HWY L 7” REFL	1
55	153795	DECAL, LANDOLL 2-1/2” REFL	2
56	157257	MOUNT WELDMENT, DIESEL ENG PACKAGE	1
57	157263	HOOD WELDMENT, ENG DRIVE UPPER DECK	1
58	157673	BRACKET, FILTER MOUNT 25HP	1
59	157677	TANK, FUEL MOD 3 GALLON	1
60	157679	TUBE, EXHAUST, 20HP	1
61	158400	STRAP ANCHOR FUEL TANK	2
62	159259	SCREW, HEX HEAD CAP M14-2 X 35 CL 8.8	2
63	159260	WASHER, SPLIT LOCK M14	2
64	159261	HOSE, SUCTION 1-1/4 X 8-1/2	1
65	1709AS669-01	J-BOLT 1/4-20 X 12	2
66	2024-12-12S	ELBOW, 90	1
67	202702-20-20S	ADAPTER **(BEFORE 11-14-2014)**	1
	119553	CONNECTOR, O-RING/37° **(AFTER 11-14-2015)**	
68	203102-12-12S	ADAPTER, TEE	1
69	2062-12-12S	ADAPTER, 90	4
70	206209-12-12S	ADAPTER, 90	1
71	2071-12-12S	ADAPTER, 90	1
72	2240-12-12S	ADAPTER, BULKHEAD	1
73	2481X	BATTERY 12V	1
74	3-120-010124	BATTERY CLAMP BRACKET	1
75	3-162-010001	FILLER-BREATHER-STRAINER ASSEMBLY	1
76	3-182-010028	CLAMP, MUFFLER	1
77	3-443-010018	LATCH, FLEXIBLE DRAW, LEVER ASSIST	2
78	514-9045-48	CABLE ASSEMBLY, BATTERY POSITIVE	1
79	514-9073-30	CABLE ASSEMBLY, BATTERY NEGATIVE	1
80	900598-12S	PLUG, O-RING	1
81	CA-1595	MACHINE MOUNT 40 DUROMETER	4

Eastern Wrecker Sales, Inc. www.easternwrecker.com - 919-553-4038

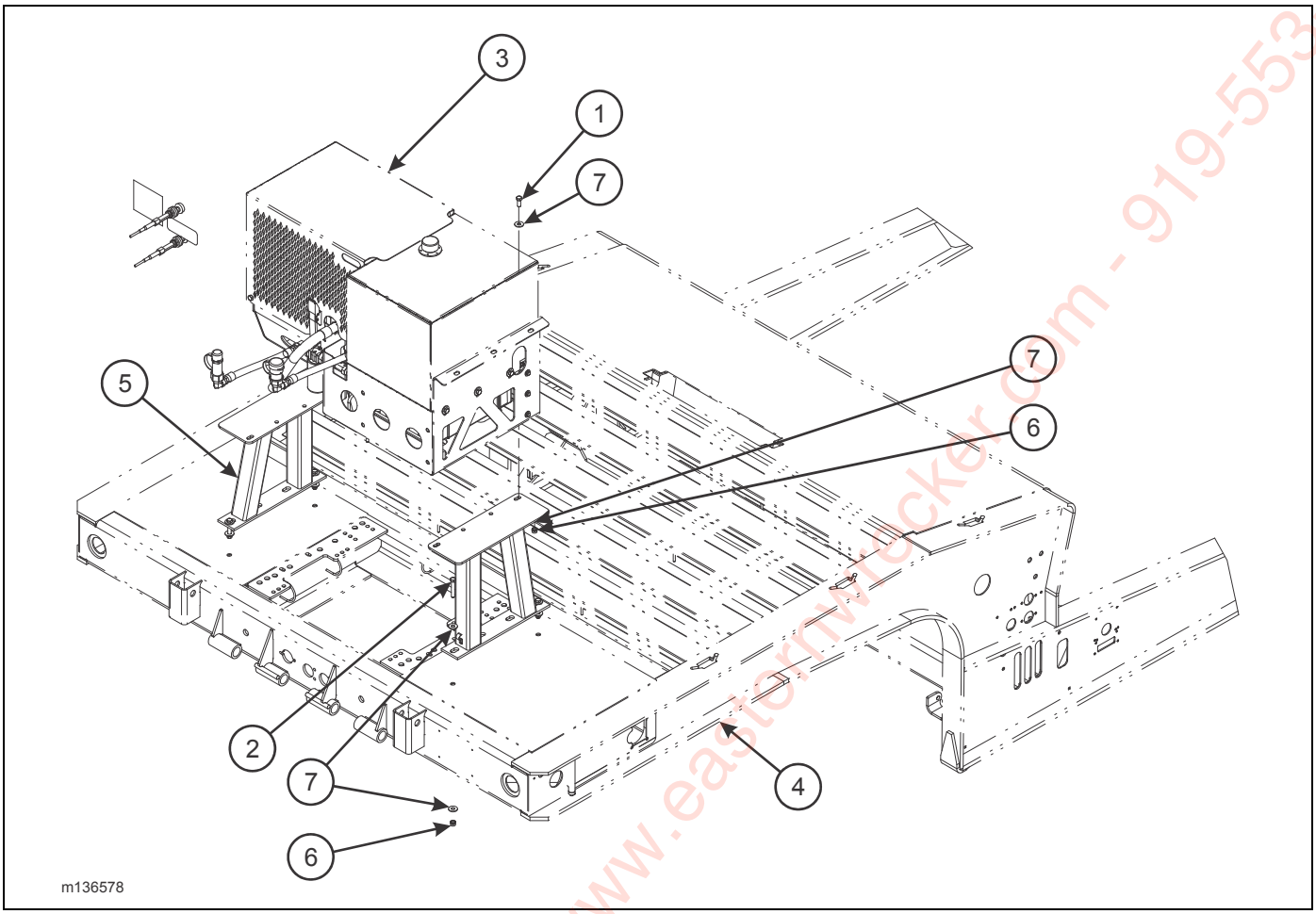

Figure 2-149: Upper Deck Engine Stand Installation

UPPER DECK ENGINE STAND INSTALLATION

ITEM	PART NO.	DESCRIPTION	QTY.
	136578	UPPER DECK STAND INSTALLATION	
1	1-654-010055-02	SCREW, HEX HEAD CAP 1/2-13 X 1-1/4 GR5	4
2	1-654-010055-09	SCREW, HEX HEAD CAP 1/2-13 X 3 GR5	4
3	123166	ENGINE PACKAGE, 27 HP GAS (SEE PAGE 2-264)	REF
4	-----	UPPER DECK FRAME WELDMENT	REF
5	134857	MOUNT WELDMENT, ENGINE PACKAGE	2
6	1-512-010005-09	NUT, HEX LOCK 1/2-13 GRB	8
7	1-861-010032-15	WASHER, FLAT 1/2W	16

Eastern Wrecker Sales, Inc. www.easternwrecker.com - 919-553-4038

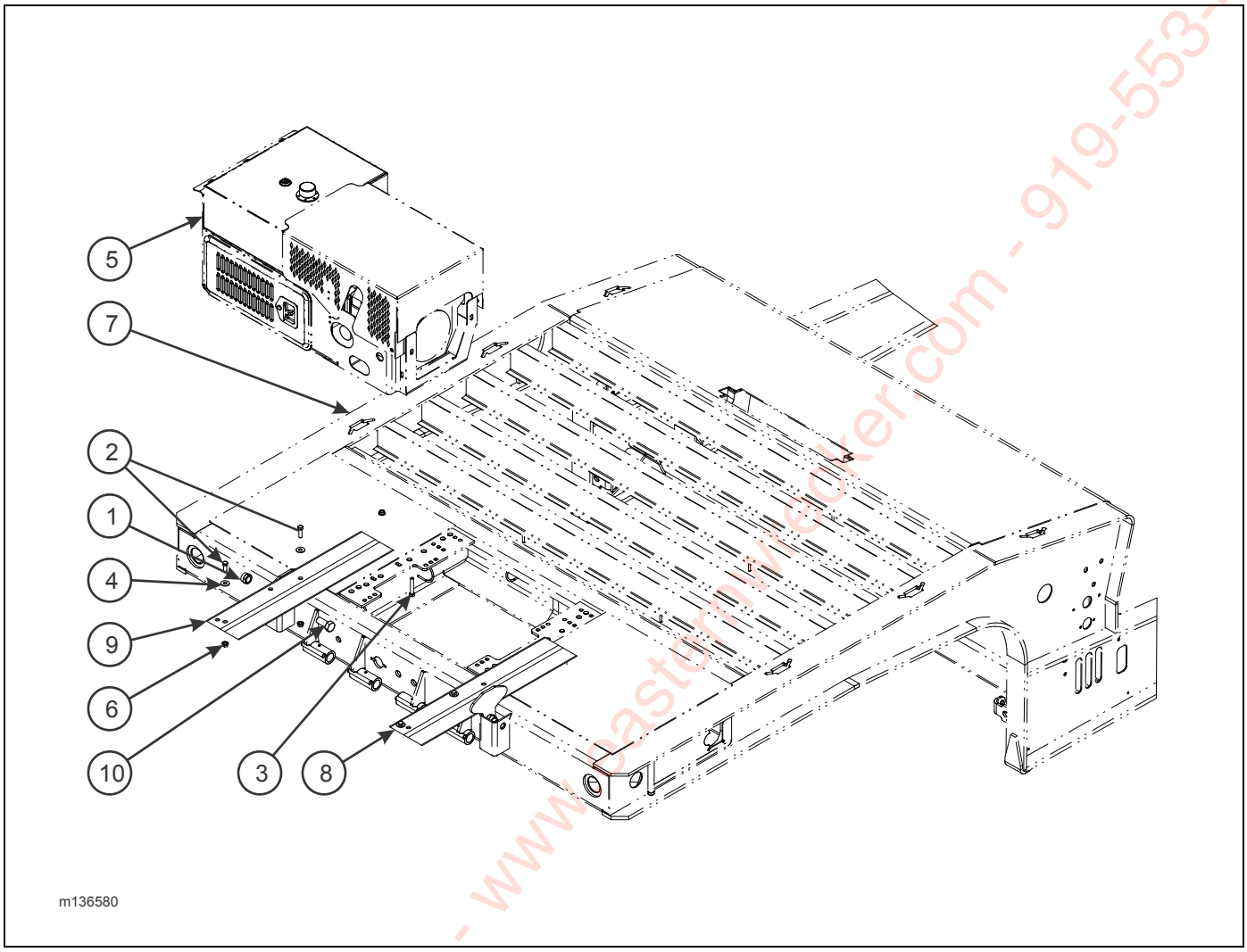

Figure 2-150: Upper Deck Engine Stand Installation

FRONT MOUNT ENGINE INSTALLATION

ITEM	PART NO.	DESCRIPTION	QTY.
	136580	FRONT MOUNT ENGINE INSTALLATION	
1	1-512-010005-19	NUT, HEX LOCK 1-8 GRB	2
2	1-654-010055-02	SCREW, HEX HEAD CAP 1/2-13 X 1-1/4 GR5	4
3	1-654-010055-10	SCREW, HEX HEAD CAP 1/2-13 X 3-1/4 GR5	2
4	1-861-010032-15	WASHER, FLAT 1/2W	8
5	123166	ENGINE PACKAGE 27 HP U/D (SEE PAGE 2-264)	REF
6	124971	NUT, FLANGE HEAD SPIRALOCK 1/2-13	6
7	-----	GOOSENECK WELDMENT	REF
8	136581	MOUNT WELDMENT LH FRONT ENG PKG	1
9	136582	MOUNT WELDMENT RH FRONT ENG PKG	1
10	137943	SCREW, HEX HEAD CAP 1-8 X 2-1/4 GR5	2

Eastern Wrecker Sales, Inc. - www.easternwrecker.com - 919-553-4038

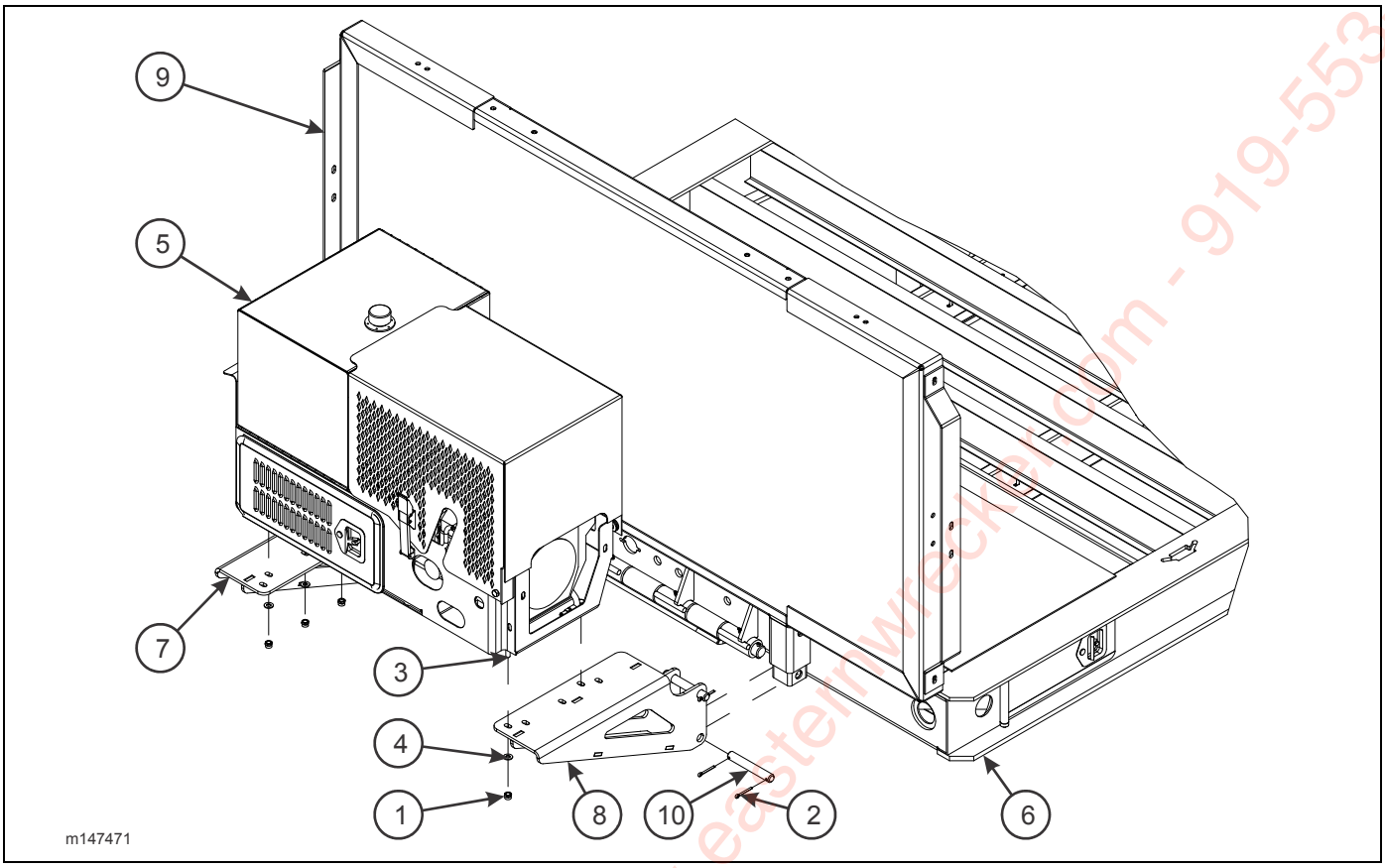

Figure 2-151: Front Extension Engine Package Mount Installation (Option)

FRONT EXTENSION ENGINE PACKAGE MOUNT INSTALLATION (OPTION)

ITEM	PART NO.	DESCRIPTION	QTY.
	147471	FRONT EXTENSION ENGINE PKG MOUNT INSTALLATION	
1	1-512-010005-09	NUT, HEX LOCK 1/2-13 GRB	5
2	1-557-010362-63	PIN, COTTER 1/4 X 2	8
3	1-654-010055-03	SCREW, HEX HEAD CAP 1/2-13 X 1-1/2 GR5	5
4	1-861-010032-14	WASHER, FLAT 1/2N	10
5	123166	ENGINE PKG 27 HP U/D (SEE PAGE 2-264)	REF
6	-----	FRAME ASSEMBLY, G/N	REF
7	147468	BRACKET WELDMENT, RH ENG MOUNT	1
8	147469	BRACKET WELDMENT, LH ENG MOUNT	1
9	3-141-010121-2	BULKHEAD INSTALLATION (SEE PAGE 2-109)	REF
10	3-557-010380	PIN, 1 X 6-7/8	4

Eastern Wrecker Sales, Inc. www.easternwrecker.com - 919-553-4038

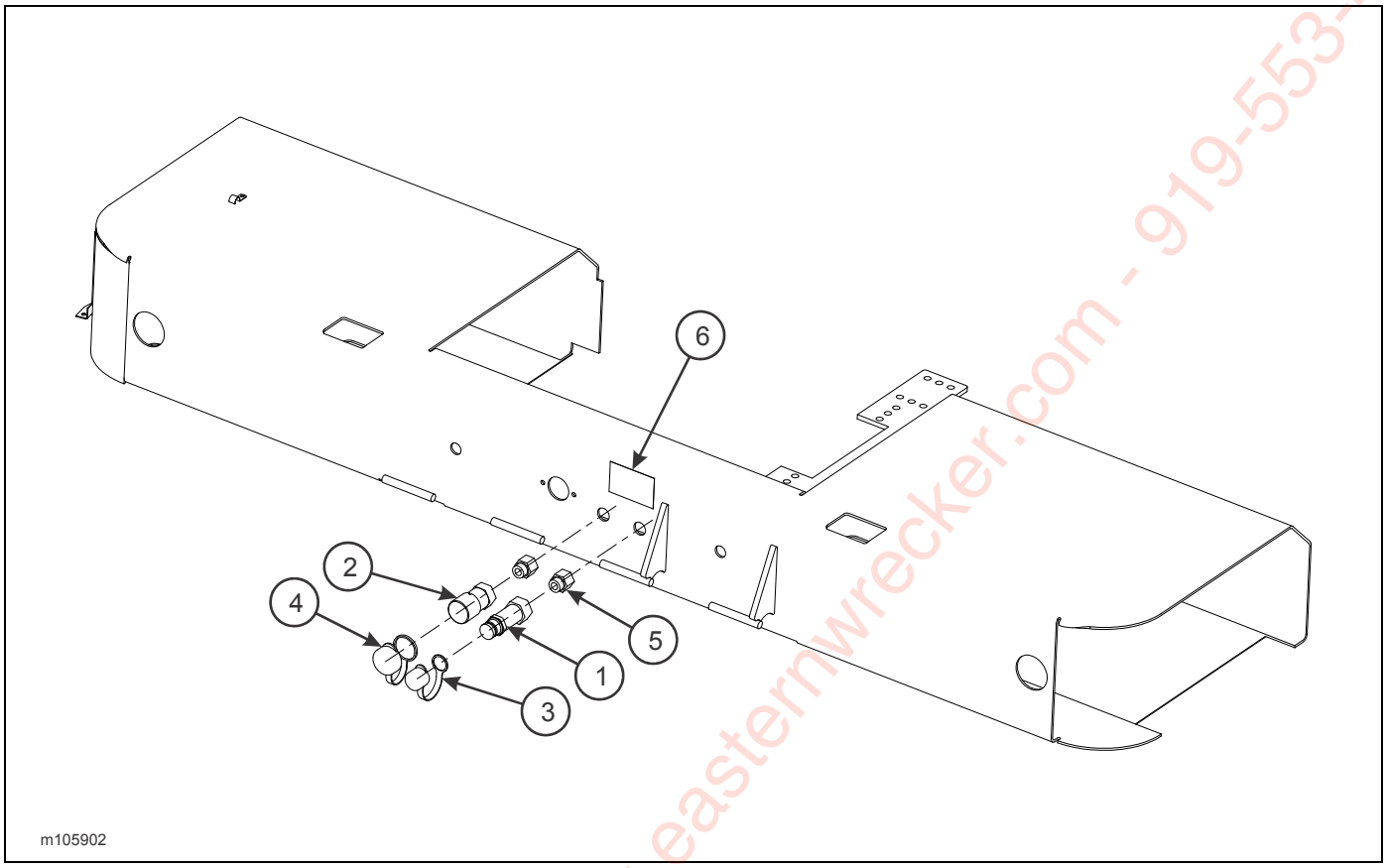

Figure 2-152: Hydraulic Conversion Kit, Ball to Flat (Option)

HYDRAULIC CONVERSION KIT, BALL TO FLAT (OPTION)

ITEM	PART NO.	DESCRIPTION	QTY.
	105902	HYDRAULIC CONVERSION KIT, BALL TO FLAT (OPTION)	
1	105479	COUPLER, FLAT FACE MALE NOSE	1
2	105480	COUPLER, FLAT FACE FEMALE BODY	1
3	105481	COUPLER, DUST CAP MALE	1
4	105482	COUPLER, DUST CAP FEMALE	1
5	2216-12-12S	INTERNAL PIPE O-RING BOSS	2
6	105822	DECAL, HYDRAULIC COUPLER	1

Eastern Wrecker Sales, Inc. - www.easternwrecker.com - 919-553-4038

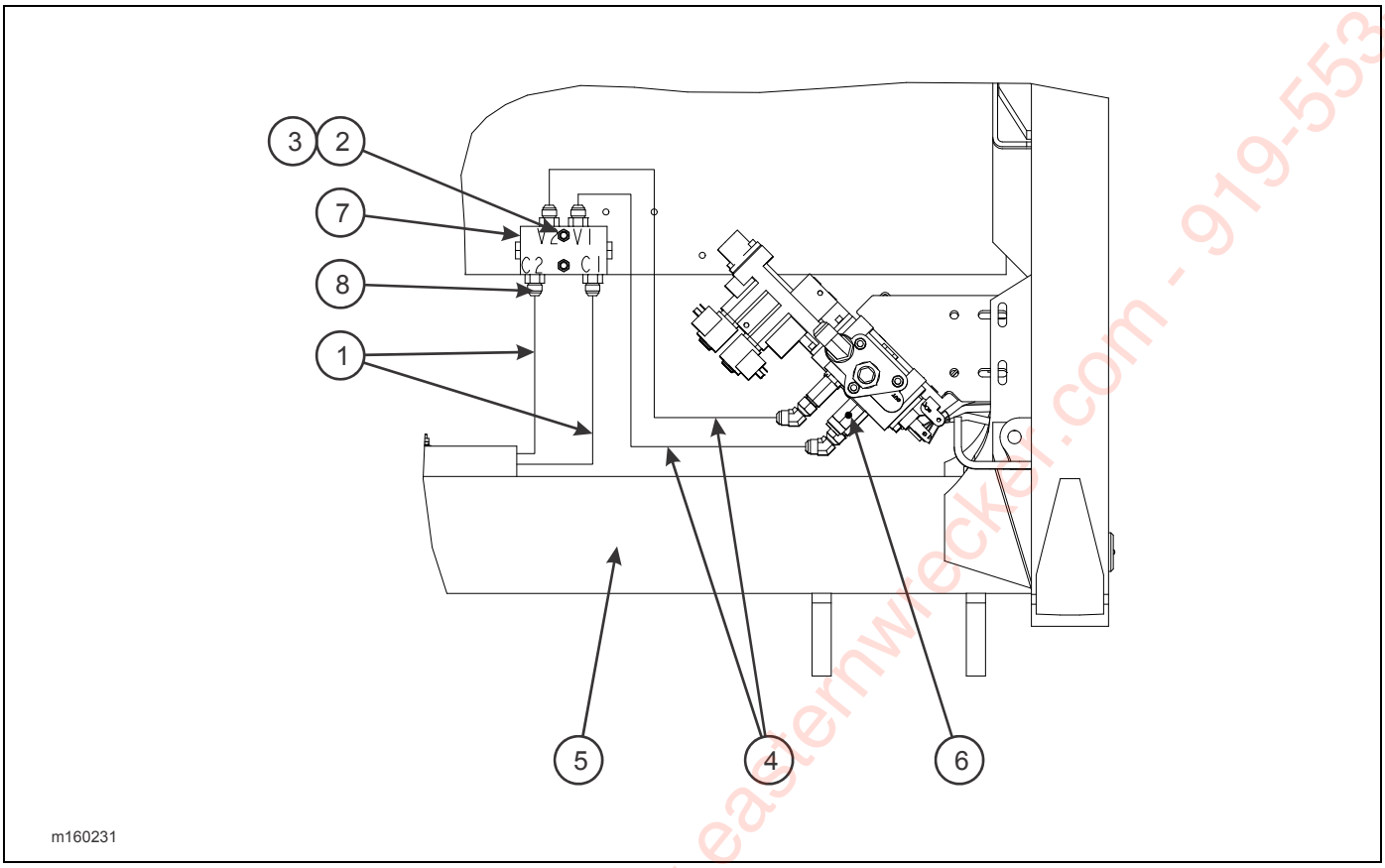

Figure 2-153: Tilt Check Valve Installation

TILT CHECK VALVE INSTALLATION

ITEM	PART NO.	DESCRIPTION	QTY.
	160231	TILT CHECK VALVE INSTALLATION	
1	1-397-010302042	HOSE ASSEMBLY 1/2 X 42	REF
2	1-512-010005-05	NUT, HEX LOCK 3/8-16 GRB	2
3	1-654-010051-09	SCREW, HEX HEAD CAP 3/8-16 X 2 GR5	2
4	105274	HOSE ASSEMBLY 1/2 X 34	1
5	-----	GOOSENECK FRAME ASSEMBLY	REF
6	148241	VALVE ASSEMBLY, 3 SPOOL (SEE PAGE 2-21)	REF
7	156699	VALVE, DOUBLE CHECK SEALED PILOT	1
8	202702-8-8S	ADAPTER	4

Eastern Wrecker Sales Inc - www.easternwrecker.com - 919-553-4038

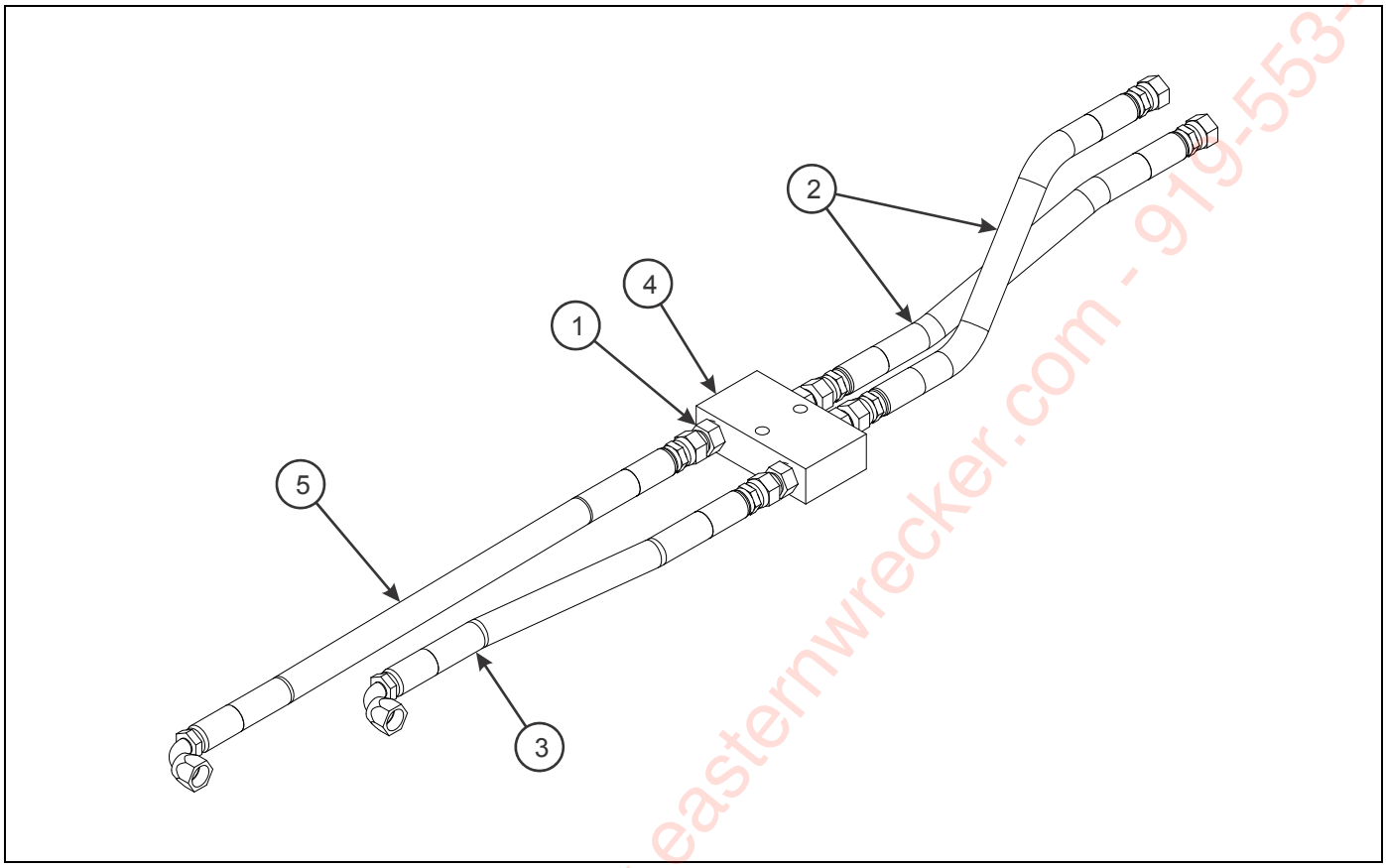

Figure 2-154: Tilt Cylinder Check Valve Installation (Option)

TILT CYLINDER CHECK VALVE INSTALLATION (OPTION)

ITEM	PART NO.	DESCRIPTION	QTY.
	136565	TILT CYLINDER CHECK VALVE INSTALLATION	
1	202702-8-8S	ADAPTER	4
2	1-397-010301018	HOSE, 1/2 X 18	2
3	125871	HOSE, 1/2 X 21	1
4	124696	VALVE, CHECK DOUBLE PILOT O-RING	1
5	107756	HOSE, 1/2 X 24	1

Eastern Wrecker Sales Inc. - www.easternwrecker.com - 919-553-4038

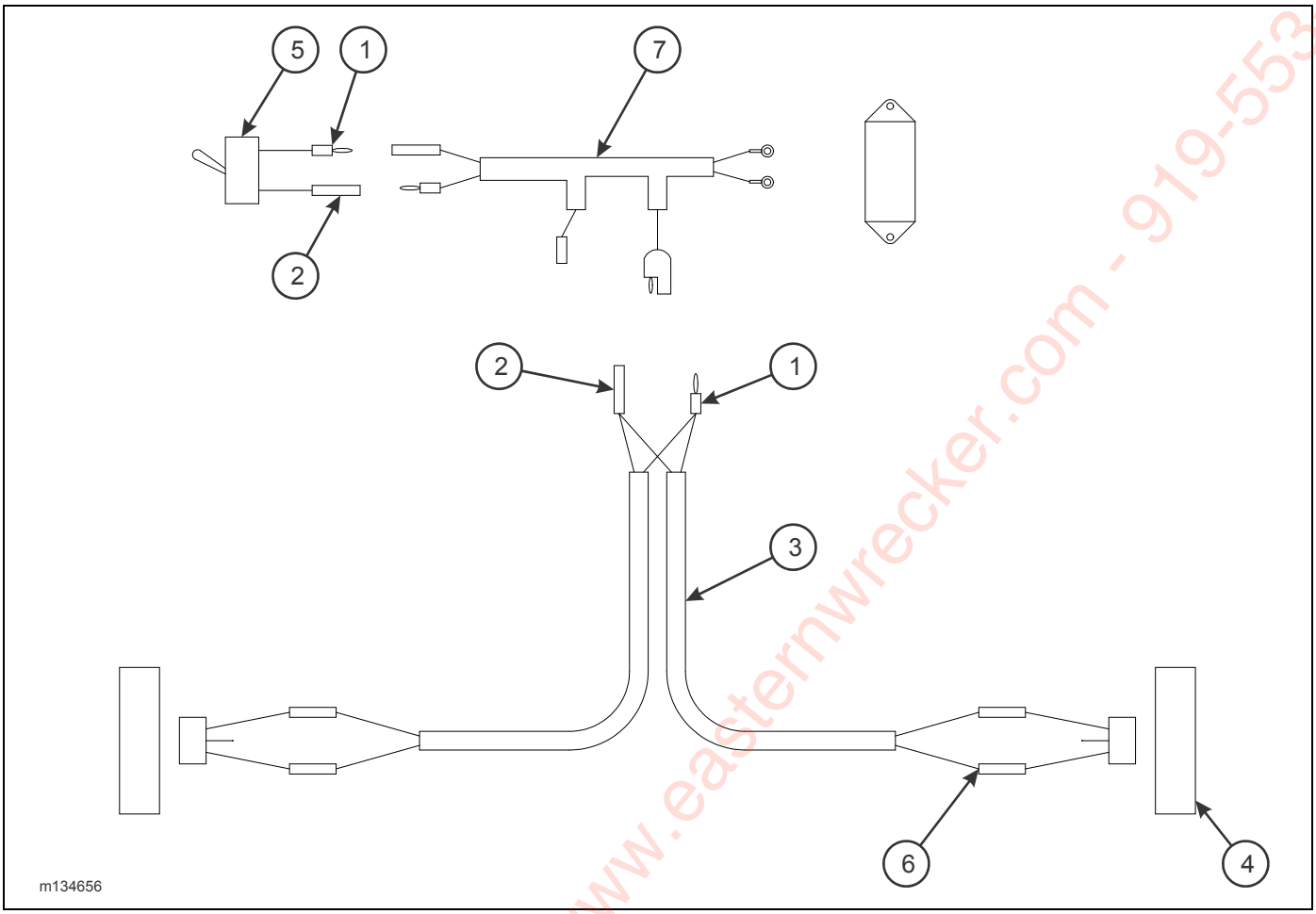

Figure 2-155: Strobe Light Installation Side (Option)

STROBE LIGHT INSTALLATION SIDE (OPTION)

ITEM	PART NO.	DESCRIPTION	QTY.
	134656	STOBE LIGHT INSTALLATION SIDE	
1	STP-147	TERMINAL BULLET ELECTRICAL	2
2	STP-164	BULLET CONNECTOR FEMALE	2
3	W214S-1	CABLE, 2 WIRE 14AWG PVCJKT 105	AR
4	130883	STROBE LIGHT GROMMET, PIGTAIL	2
5	3-272-010017	TOGGLE SWITCH SEALED SPST	1
6	3-272-010021	ELECT BUTT SPLICE 16-14 W/ SEAL	8
7	3-368-010253	HARNESS ASSEMBLY, CONTROL PANEL	1

Eastern Wrecker Sales, Inc. - www.easternwrecker.com - 919-553-4038

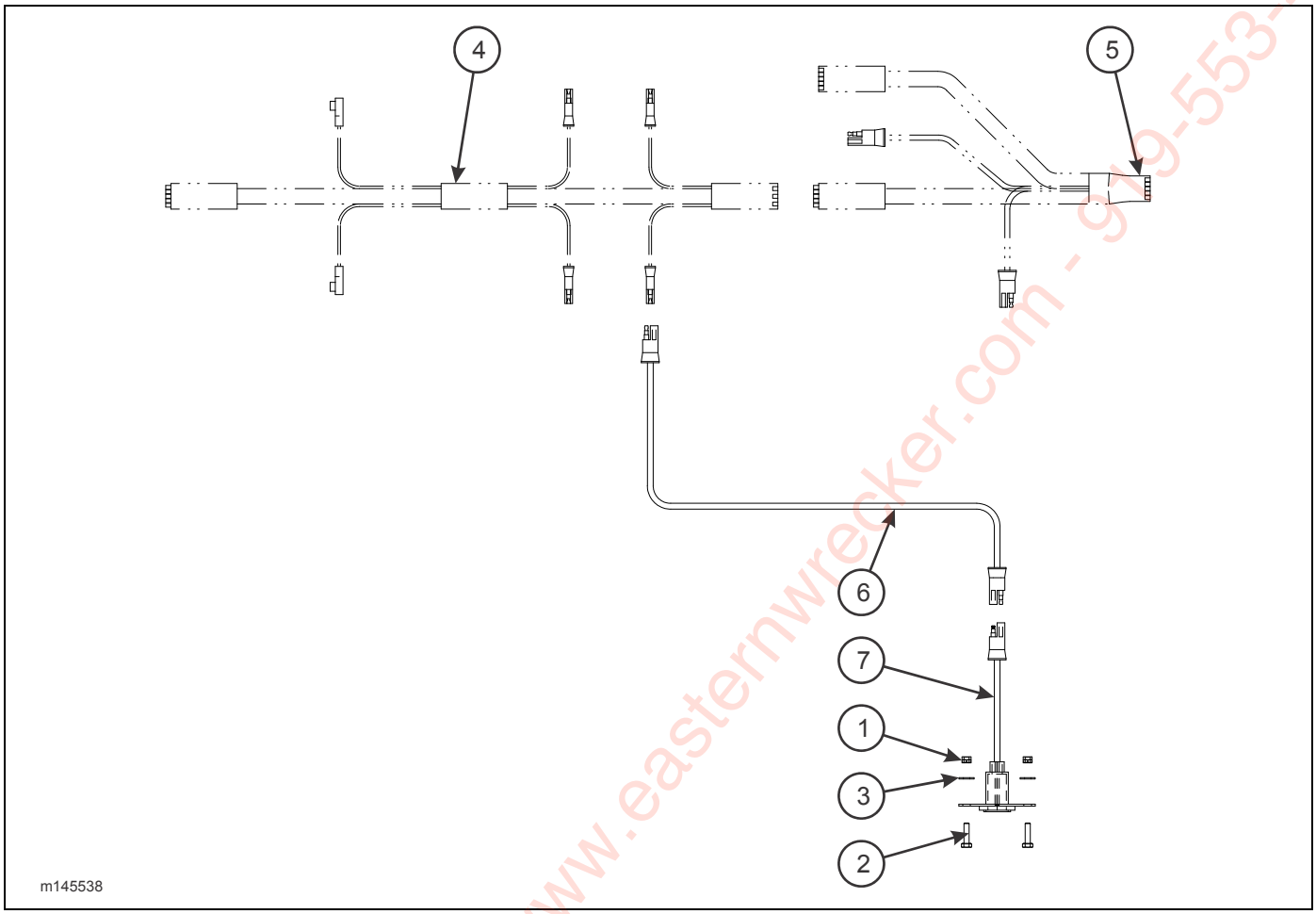

Figure 2-156: Rear Side Electrical Outlet Installation (Option)

REAR SIDE ELECTRICAL OUTLET INSTALLATION (OPTION)

ITEM	PART NO.	DESCRIPTION	QTY.
	145538	ELECTRICAL OUTLET, REAR SIDE	
1	1-512-010005-01	NUT, HEX LOCK 1/4-20 GRB	2
2	1-654-010047-06	SCREW, HEX HEAD CAP 1/4-20 X 1 GR5	2
3	1-861-010032-07	WASHER, FLAT 1/4W	2
4	143102	HARNESS, BED MAIN GROTE	REF
5	143103	HARNESS, E-CHAIN GROTE	REF
6	150111	HARNESS 300”	1
7	150116	HARNESS/RECEPTACLE ASSEMBLY	1

Eastern Wrecker Sales, Inc. www.easternwrecker.com - 919-553-4038

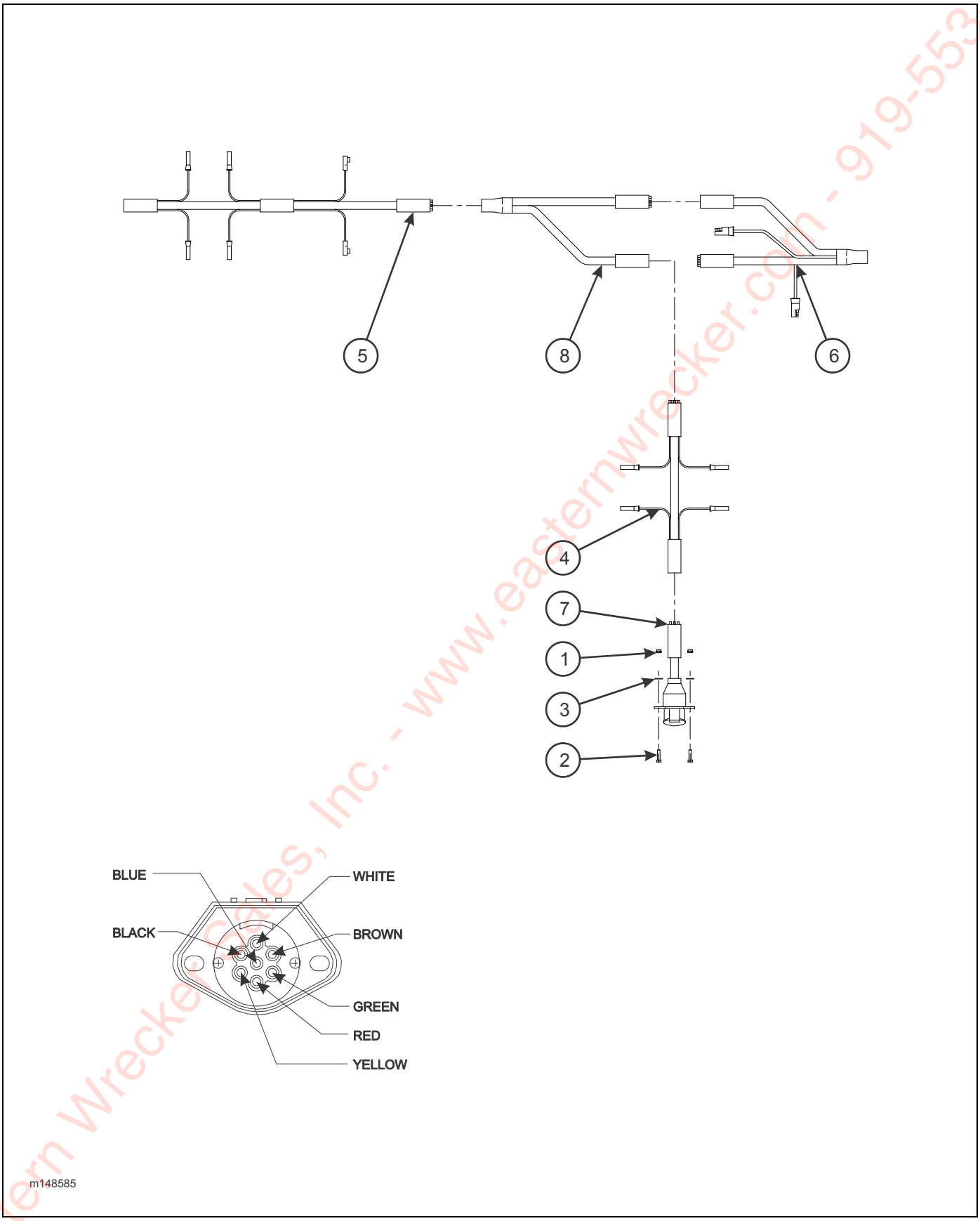

Figure 2-157: 7-Way Electrical Installation (Option)

Eastern Wrecker Sales, Inc. - www.easternwrecker.com - 919-553-4038

7-WAY ELECTRICAL INSTALLATION (OPTION)

ITEM	PART NO.	DESCRIPTION	QTY.
	148585	7-WAY ELECTRICAL INSTALLATION	
1	1-512-010005-01	NUT, HEX LOCK 1/4-20 GRB	2
2	1-654-010047-06	SCREW, HEX HEAD CAP 1/4-20 X 1 GR5	2
3	1-861-010032-07	WASHER, FLAT 1/4W	2
4	143101	HARNESS, FRONT MAIN	1
5	143102	HARNESS, BED MAIN	REF
6	143103	HARNESS, E-CHAIN	REF
7	146897	HARNESS, 7-WAY RECEPTACLE MAIN	1
8	146929	HARNESS, Y SPLITTER	1

Eastern Wrecker Sales, Inc. - www.easternwrecker.com - 919-553-4038

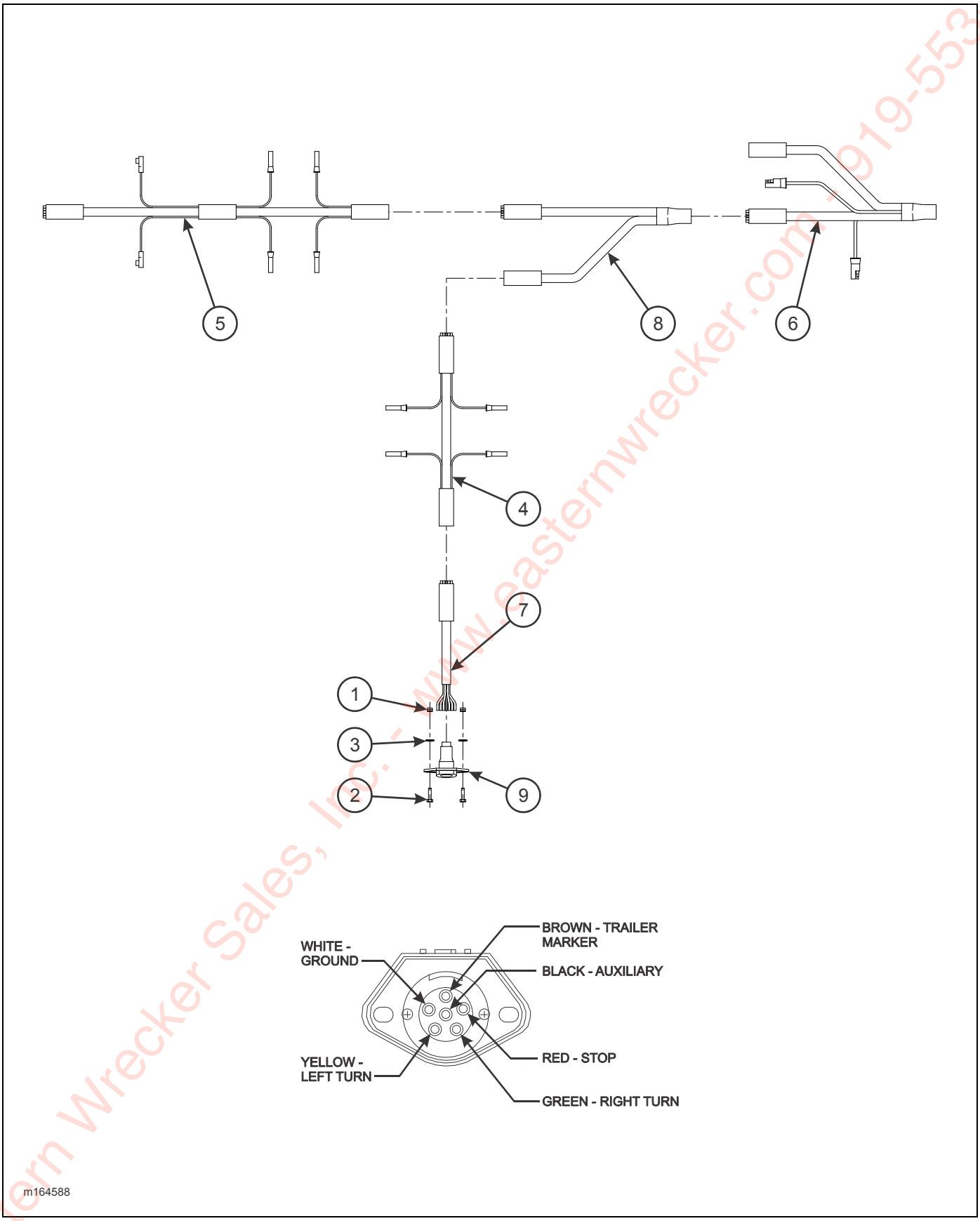

Figure 2-158: 6-Way Electrical Installation (Option)

Eastern Wrecker Sales, Inc. - www.easternwrecker.com - 919-553-4038

6-WAY ELECTRICAL INSTALLATION (OPTION)

ITEM	PART NO.	DESCRIPTION	QTY.
	164588	6-WAY ELECTRICAL INSTALLATION	
1	1-512-010005-01	NUT, HEX LOCK 1/4-20 GRB	2
2	1-654-010047-06	SCREW, HEX HEAD CAP 1/4-20 X 1 GR5	2
3	1-861-010032-07	WASHER, FLAT 1/4W	2
4	143101	HARNESS, FRONT MAIN	1
5	143102	HARNESS, BED MAIN	REF
6	143103	HARNESS, E-CHAIN	REF
7	143166	HARNESS, EXT 48”	1
8	146929	HARNESS, Y SPLITTER	1
9	3-203-010025	CONNECTOR, ELECTRICAL 6-WAY	1

Eastern Wrecker Sales, Inc. - www.easternwrecker.com - 919-553-4038

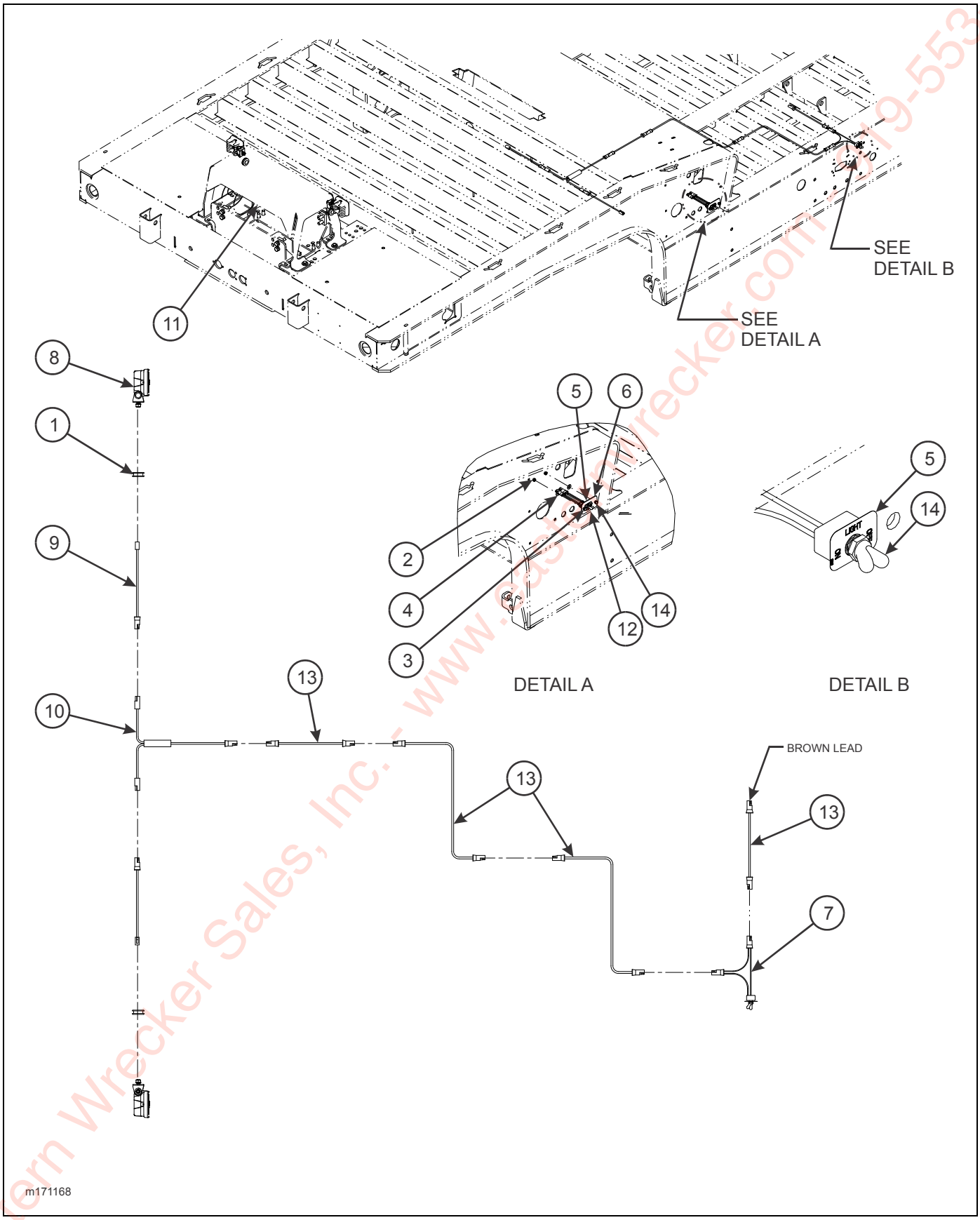

Figure 2-159: Work Light Installation, Winch (Option)

Eastern Wrecker Sales, Inc. - www.easternwrecker.com - 919-553-4038

WINCH WORK LIGHT INSTALLATION (OPTION)

ITEM	PART NO.	DESCRIPTION	QTY.
	171168	WINCH WORK LIGHT INSTALLATION	
1	1-343-010001	GROMMET	2
2	1-512-010005-03	NUT, HEX LOCK 5/16-18 GRB	2
3	1-654-010049-05	SCREW, HEX HEAD CAP 5/16-18 X 1 GR5	2
4	1-861-010032-09	WASHER, FLAT 5/16W	2
5	130116	DECAL, ON/OFF LIGHT	1
6	137987	MOUNT, ELECTRICAL SWITCH	1
7	150117	TOGGLE SWITCH SEALED SPST	1
8	163996	LIGHT LED WHITE FLOOD LAMP	2
9	164052	HARNESS, 60” BRANCH WORK LIGHT	2
10	169853	HARNESS, JUMPER T-POWER	1
11	171166	12/20K WINCH GUARD INSTALLATION (SEE PAGE 2-224)	REF
12	174043	DECAL, WINCH HI/LO	1
13	3-368-010252	HARNESS ASSEMBLY, BULKHEAD LIGHT EXTENSION	4
14	81264	RUBBER BOOT FOR ELECT SWITCH	2

Eastern Wrecker Sales, Inc. - www.easternwrecker.com - 919-553-4038

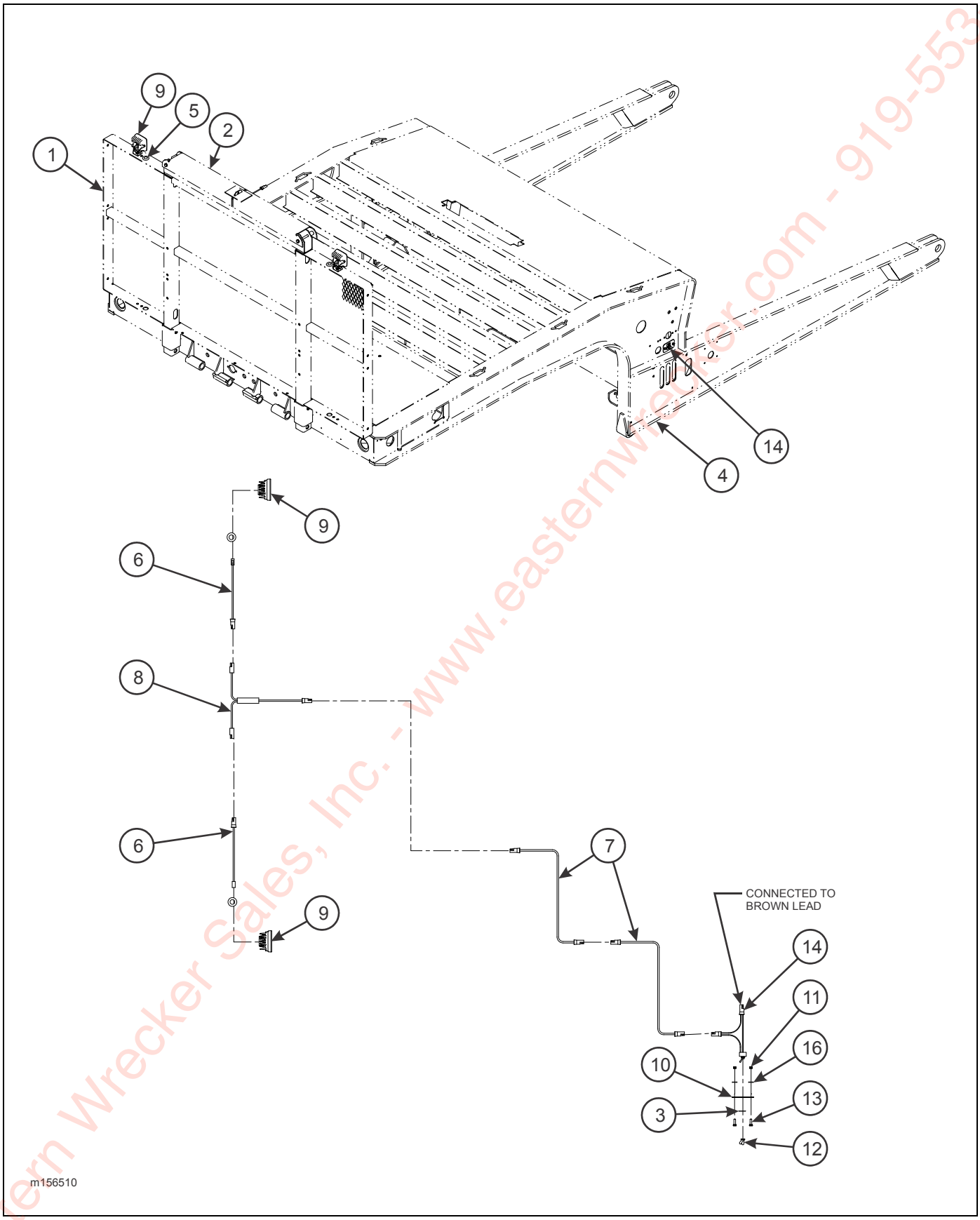

Figure 2-160: Work Light Assembly, Bulkhead (Option)

Eastern Wrecker Sales, Inc. - www.easternwrecker.com - 919-553-4038

WORK LIGHT ASSEMBLY, BULKHEAD (OPTION)

ITEM	PART NO.	DESCRIPTION	QTY.	
	156510	WORK LIGHT ASSEMBLY, BULKHEAD (OPTION)		
	169927	WORK LIGHT ASSEMBLY, BULKHEAD HD (OPTION)		
1	-----	BULKHEAD WELDMENT	REF	REF
2	B7-141-003	CHAIN RACK INSTALLATION	REF	REF
3	130116	DECAL, ON/OFF LIGHT	1	1
4	-----	GOOSENECK WELDMENT	REF	REF
5	1-343-010006	GROMMET	2	2
6	164052	HARNESS, 60” BRANCH WORK LIGHT	2	2
7	3-368-010252	HARNESS ASSEMBLY, BULKHEAD LIGHT EXTENSION	2	3
8	169853	HARNESS, JUMPER T-POWER	1	1
9	163996	LIGHT LED WHITE FLOOD LAMP	2	2
10	137987	MOUNT, ELECTRICAL SWITCH	1	1
11	1-512-010005-03	NUT, HEX LOCK 5/16-18 GRB	2	2
12	81264	RUBBER BOOT FOR ELECT SWITCH	1	1
13	1-654-010049-05	SCREW, HEX HEAD CAP 5/16-18 X 1 GR5	2	2
14	150117	TOGGLE SWITCH SEALED SPST	1	1
15	1-822-010002	TRIM LOCK 3/16 (NOT SHOWN)	AR	AR
16	1-861-010032-09	WASHER, FLAT 5/16W	2	2

Eastern Wrecker Sales, Inc. - www.easternwrecker.com - 919-553-4038

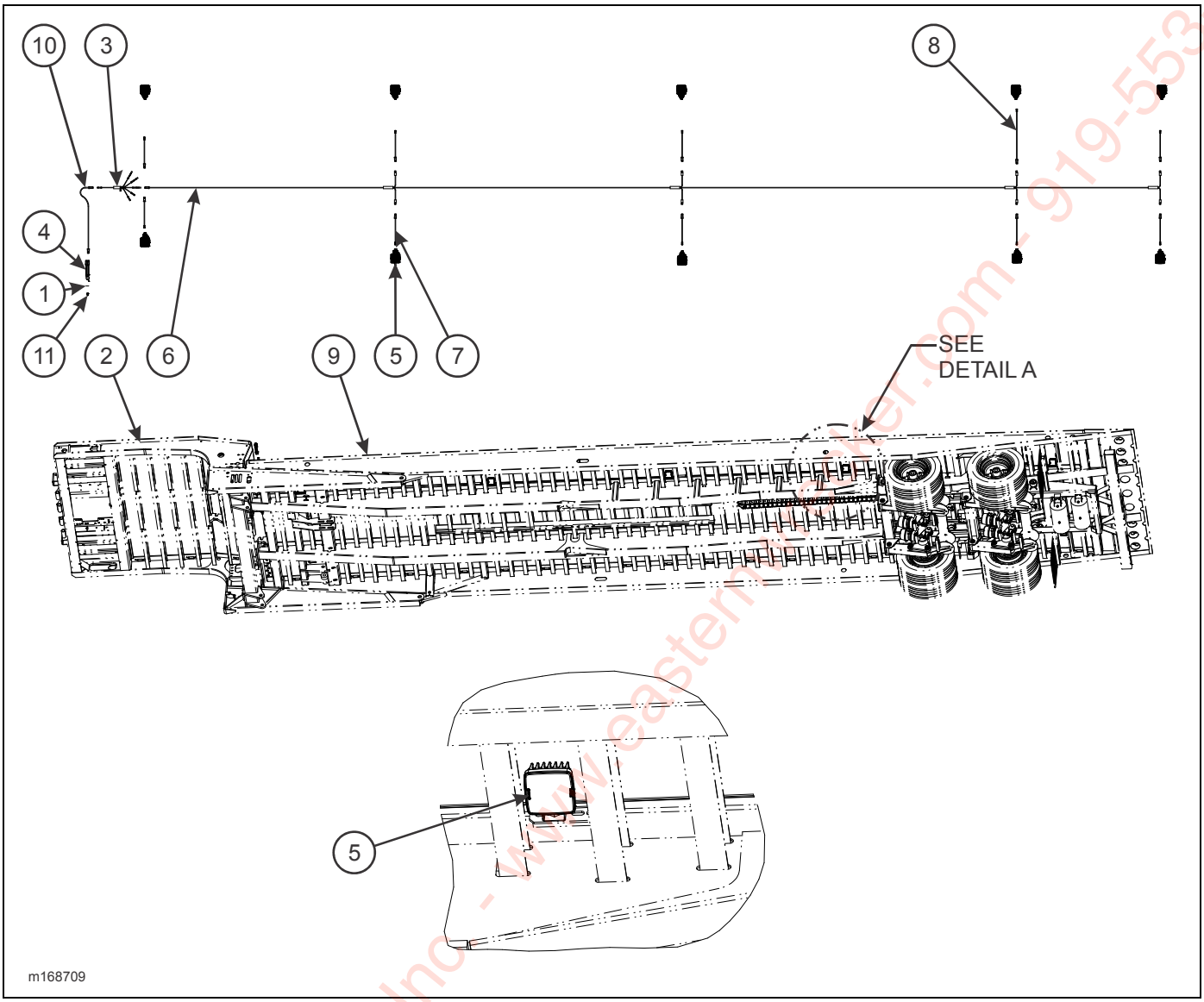

Figure 2-161: Underdeck Light Installation (440-53) (Option)

UNDERDECK LIGHT INSTALLATION (440-53) (OPTION)

ITEM	PART NO.	DESCRIPTION	QTY.
	168709	UNDERDECK LIGHT INSTALLATION (440-53)	
1	130116	DECAL, ON/OFF LIGHT	1
2	-----	GOOSENECK WELDMENT	REF
3	150093	HARNESS, 5 AUXILIARY BRANCHES	1
4	150117	TOGGLE SWITCH SEALED SPST	1
5	163996	LIGHT, LED WHITE FLOODLAMP	REF
6	164012	HARNESS, WORK LIGHT	1
7	164052	HARNESS, 60” BRANCH WORK LIGHT	2
8	164053	HARNESS, BRANCH WORK LIGHT 102’”	1
9	-----	FRAME, MOD UNDERDECK LIGHTS	REF
10	3-368-010252	HARNESS ASSEMBLY, BULKHEAD EXTENSION	1
11	81264	RUBBER BOOT FOR ELECT SWITCH	1

Eastern Wacker Sales, Inc - www.easternwacker.com - 919-553-4038

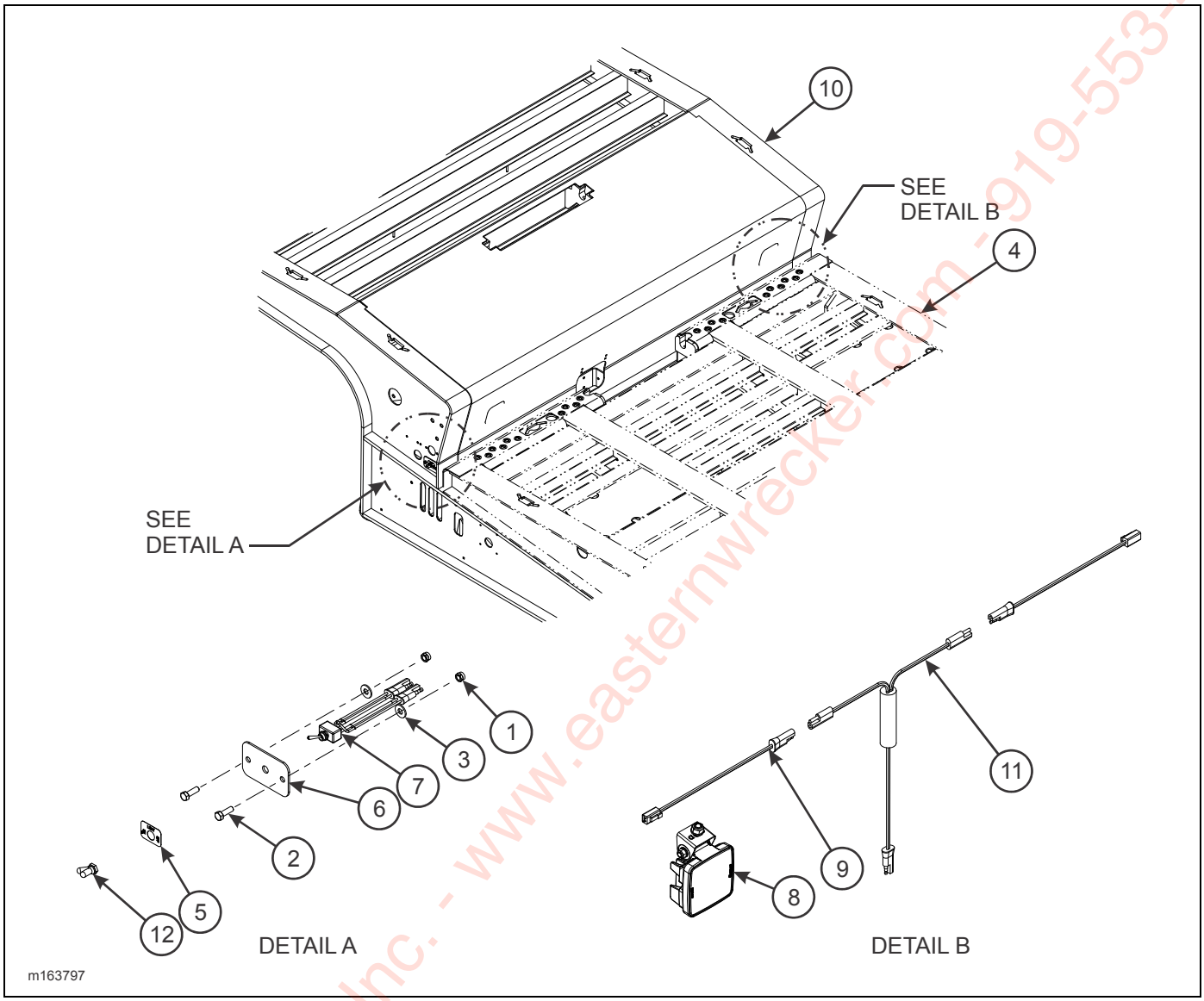

Figure 2-162: U/D Slope Light Installation (Option)

U/D SLOPE LIGHT INSTALLATION (OPTION)

ITEM	PART NO.	DESCRIPTION	QTY.
	169201	U/D SLOPE LIGHT INSTALLATION	
1	1-512-010005-03	NUT, HEX LOCK 5/16-18 GRB	2
2	1-654-010049-05	SCREW, HEX HEAD CAP 5/16-18 X 1 GR5	2
3	1-861-010032-09	WASHER, FLAT 5/16W	2
4	-----	FRAME WELDMENT	REF
5	130116	DECAL, ON/OFF LIGHT	1
6	137987	MOUNT, ELECTRIC SWITCH	1
7	150117	TOGGLE SWITCH SEALED SPST	1
8	163996	LIGHT, LED WHITE FLOODLAMP	REF
9	164052	HARNESS, 60” BRANCH WORK LIGHT	2
10	169202	FRAME, MOD U/D SLOPE LIGHTS	1
11	169853	HARNESS, T POWER BRANCH	1
12	81264	RUBBER BOOT FOR ELECT SWITCH	1

Eastern Wrecker Sales, Inc. - www.easternwrecker.com - 919-553-4038

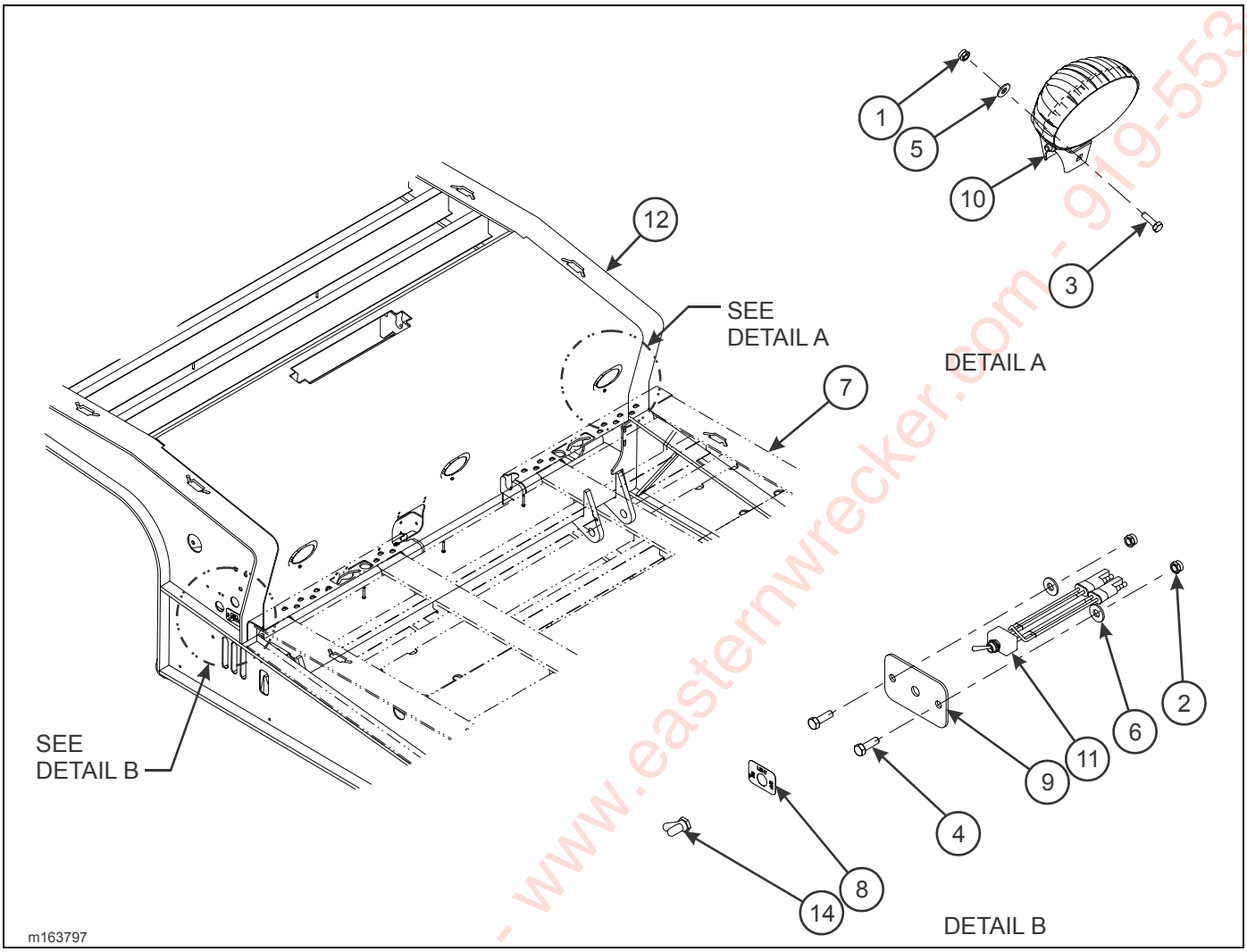

Figure 2-163: Slope Work Light Installation, LED (Option)

SLOPE WORK LIGHT INSTALLATION, LED (OPTION)

ITEM	PART NO.	DESCRIPTION	QTY.
	163797	LED SLOPE WORK LIGHT INSTALLATION	
1	1-512-010005-01	NUT, HEX LOCK 1/4-20 GRB	6
2	1-512-010005-03	NUT, HEX LOCK 5/16-18 GRB	2
3	1-654-010047-05	SCREW, HEX HEAD CAP 1/4-20 X 7/8 GR5	3
4	1-654-010049-05	SCREW, HEX HEAD CAP 5/16-18 X 1 GR5	2
5	1-861-010032-07	WASHER, FLAT 1/4	3
6	1-861-010032-09	WASHER, FLAT 5/16W	2
7	-----	FRAME WELDMENT	REF
8	130116	DECAL, ON/OFF LIGHT	1
9	137987	MOUNT, ELECTRIC SWITCH	1
10	145816	LIGHT, 3 X 5 LED HOIZONTAL OVAL	3
11	150117	TOGGLE SWITCH SEALED SPST	1
12	163798	FRAME, MOD U/D SLOPE LIGHTS	1
13	164569	HARNESS, LED WORK LIGHT	1
14	81264	RUBBER BOOT FOR ELECT SWITCH	1

Eastern Wrecker Sales, Inc. - www.easternwrecker.com - 919-553-4038

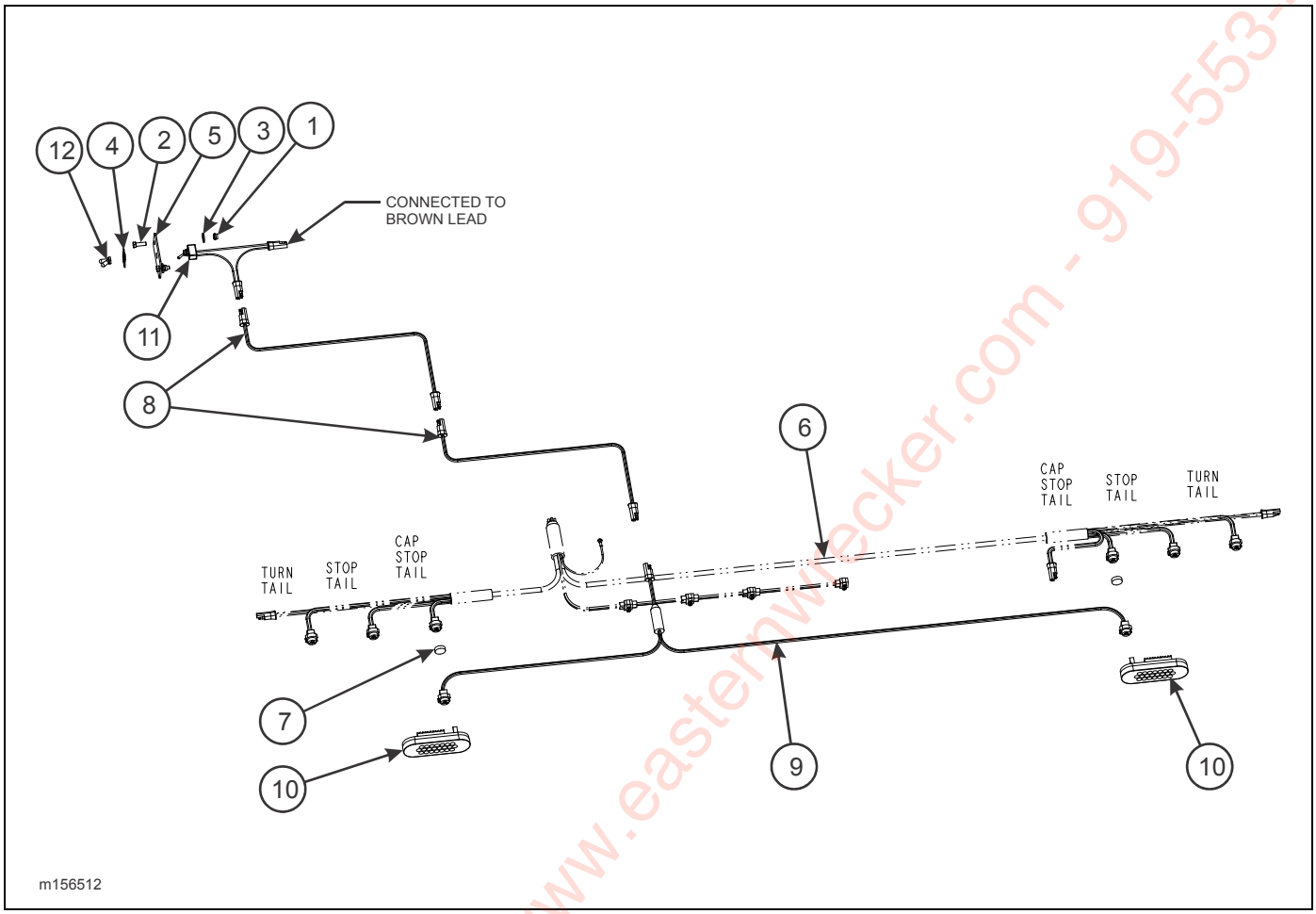

Figure 2-164: Strobe Installation, Bumper (Option)

STROBE INSTALLATION, BUMPER (OPTION)

ITEM	PART NO.	DESCRIPTION	QTY.
	156512	WORK LIGHT INSTALLATION, LED SLOPE	
1	1-512-010005-03	NUT, HEX LOCK 5/16-18 GRB	2
2	1-654-010049-05	SCREW, HEX HEAD CAP 5/16-18 X 1 GR5	2
3	1-861-010032-09	WASHER, FLAT 5/16W	2
4	130116	DECAL, ON/OFF LIGHT	1
5	137987	MOUNT, ELECTRIC SWITCH	1
6	143104	HARNESS, REAR LED	REF
7	144608	DUMMY PLUG FOR FEMALE PLUG	2
8	150111	HARNESS	2
9	150114	HARNESS, BUMPER STROBE	1
10	150115	LIGHT, YELLOW STROBE OVAL	2
11	150117	TOGGLE SWITCH SEALED SPST	1
12	81264	RUBBER BOOT FOR ELECT SWITCH	1

Eastern Wrecker Sales, Inc. www.easternwrecker.com - 919-553-4038

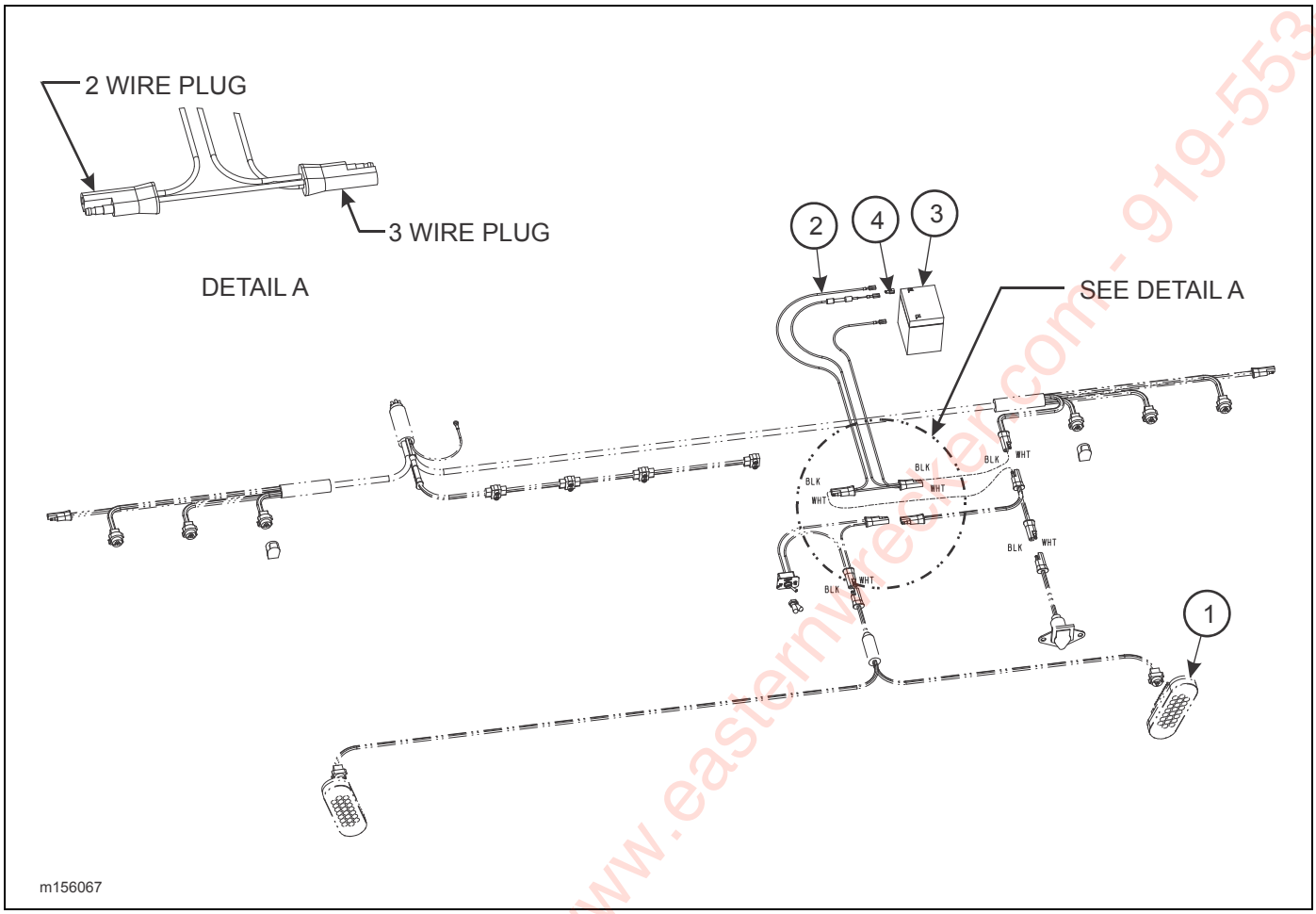

Figure 2-165: Battery Backup Bumper Strobe Light Installation (Option)

BATTERY BACKUP BUMPER STROBE LIGHT INSTALLATION (OPTION)

ITEM	PART NO.	DESCRIPTION	QTY.
	156067	BATTERY BACKUP BUMPER STROBE LIGHT	
1	155107	STROBE, BUMPER	REF
2	156069	HARNESS ASSEMBLY, JUMPER TRIC CHG	1
3	3-128-010032	BATTERY BRAKE-AWAY	1
4	3-272-010157	ELECT ADAPTER CHAIR 1/4 PUSH-ON	1

Eastern Wrecker Sales, Inc. www.easternwrecker.com - 919-553-4038

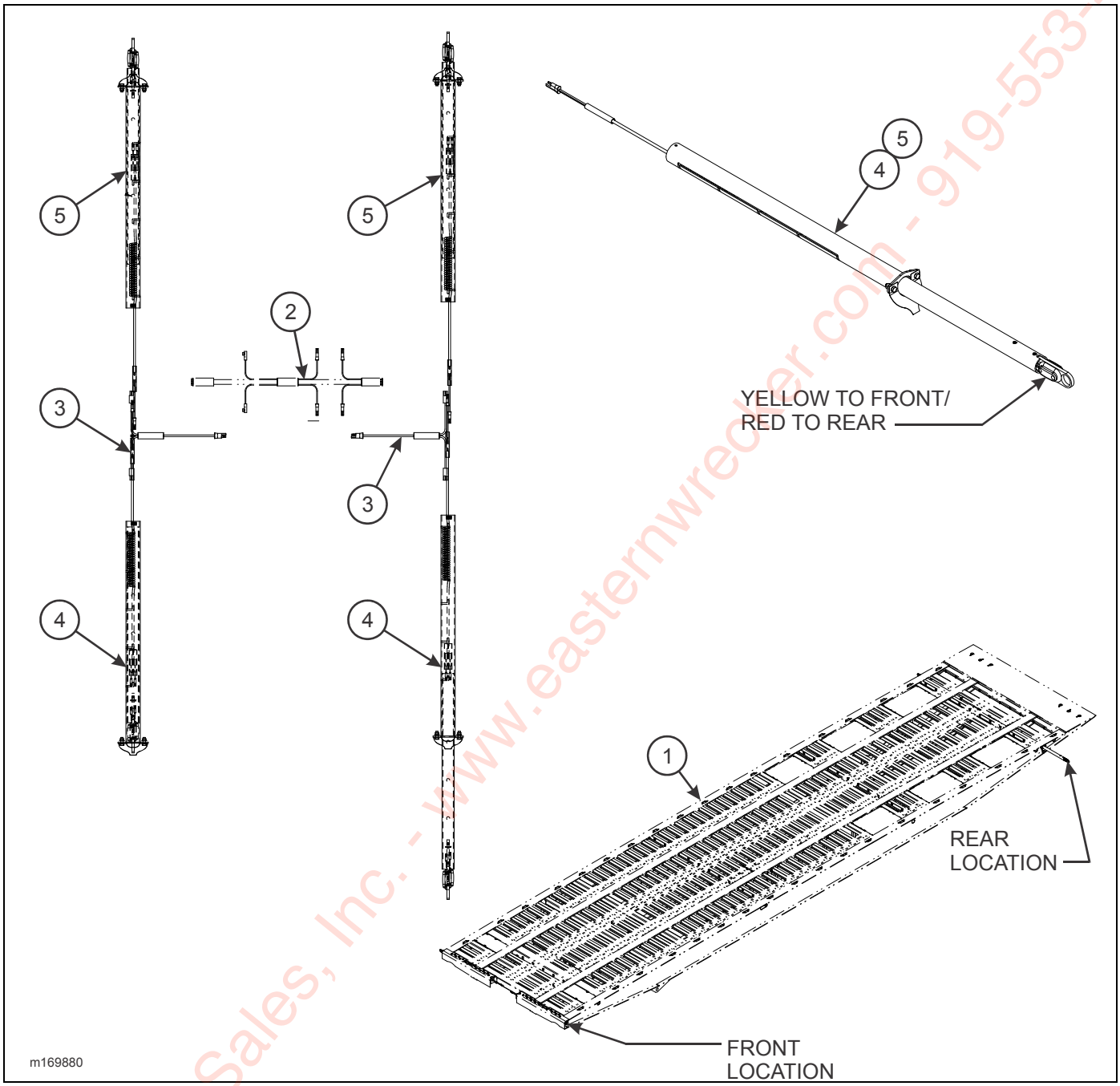

Figure 2-166: P/O Marker Light Installation (Option)

P/O MARKER LIGHT INSTALLATION (OPTION)

ITEM	PART NO.	DESCRIPTION	QTY.
	169880	P/O MARKER LIGHT INSTALLATION	
1	-----	FRAME WELDMENT	REF
2	143102	HARNESS, BED MAIN	REF
3	167965	HARNESS, JUMPER T-POWER	2
4	169887	P/O EXTENSION LIGHT ASSEMBLY, LH (SEE PAGE 2-295)	2
5	169888	P/O EXTENSION LIGHT ASSEMBLY, RH (SEE PAGE 2-295)	2

Eastern Wrecker Sales, Inc. - www.easternwrecker.com - 919-553-4038

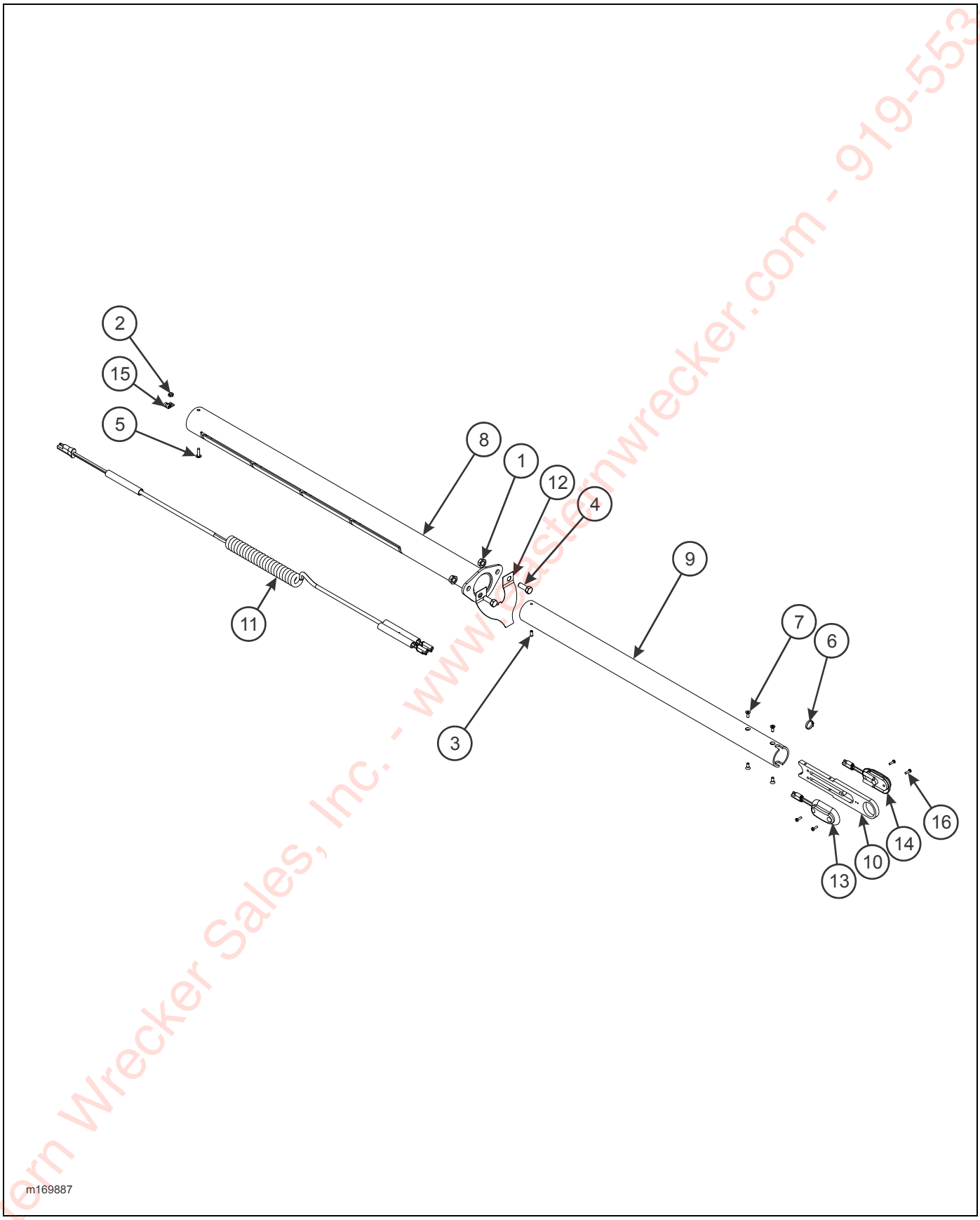

Figure 2-167: P/O Extension Light Assembly (Option)

Eastern Wrecker Sales, Inc. - www.easternwrecker.com - 919-553-4038

P/O EXTENSION LIGHT ASSEMBLY (OPTION)

ITEM	PART NO.	DESCRIPTION	QTY.	
	169887	P/O EXTENSION LIGHT ASSEMBLY, LH (SHOWN)	*	
	169888	P/O EXTENSION LIGHT ASSEMBLY, RH		*
1	1-510-010001	NUT, FLANGE LOCK 3/8-16	16	16
2	1-512-010003-06	NUT, HEX LOCK #10-24	1	1
3	1-647-010004165	ROLL PIN, SLOTTED 3/16 X 1/2	1	1
4	1-654-010051-05	SCREW, HEX HEAD CAP 3/8-16 X 1 GR5	2	2
5	1-656-010003051	SCREW, RD HEAD SQ NECK 10-24 X 3/4	4	4
6	1-796-010002-01	TIE STRAP, PLASTIC .140 X 5.5	1	1
7	118629	SCREW, HEX SOCKET CTSK #10-24 X 1/2	4	4
8	169881	MOUNT WELDMENT, P/O LIGHT EXT	1	1
9	169885	TUBE, INNER P/O EXT MARKER	1	1
10	169886	MOUNT, P/O EXTENSION MARKER LIGHT	1	1
11	169891	CABLE ASSEMBLY, COILED EXT MARKER LIGHT	1	1
12	171934	SPRING LOCK, P/O MARKER	1	1
13	171935	LIGHT ASSEMBLY, YELLOW LED	1	1
14	171936	LIGHT ASSEMBLY, RED LED	1	1
15	239-9076-1	CLAMP SUPPORT 1/4	1	1
16	85G608E	SCREW, SLOTTED PAN HEAD #6-32 X 1/2	4	4

Eastern Wrecker Sales, Inc. - www.easternwrecker.com - 919-553-4038

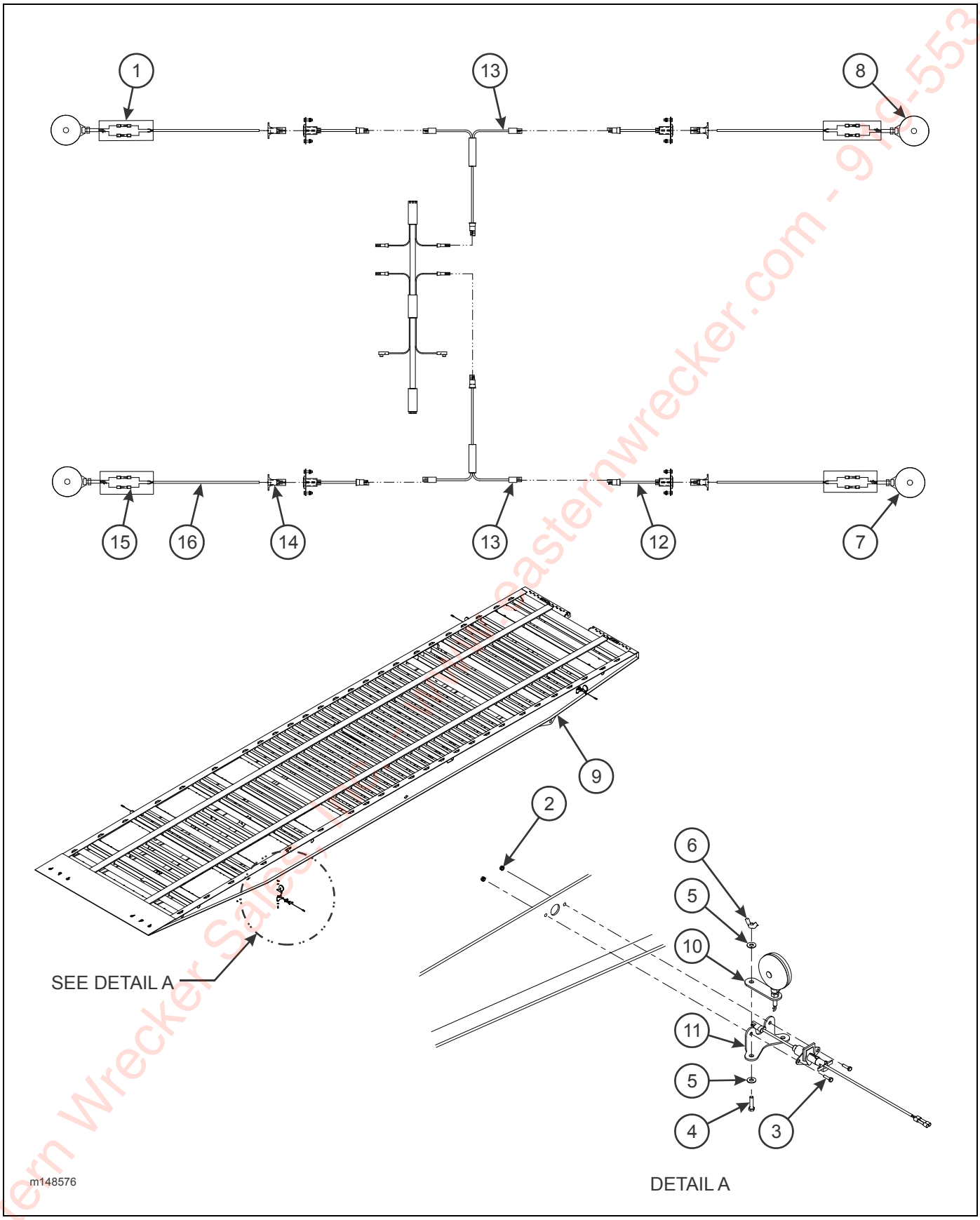

Figure 2-168: Four Corner Light Installation (Option)

Eastern Wrecker Sales - www.easternwrecker.com - 919-553-4038

FOUR CORNER LIGHT INSTALLATION (OPTION)

ITEM	PART NO.	DESCRIPTION	QTY.
	148576	FOUR CORNER LIGHT INSTALLATION	
1	0013007	TUBING, HEAT SHRINK	1
2	1-512-010005-01	NUT, HEX LOCK 1/4-20 GRB	6
3	1-654-010047-06	SCREW, HEX HEAD CAP 1/4-20 X 1 GR5	2
4	1-654-010051-07	SCREW, HEX HEAD CAP 3/8-16 X 1-1/2 GR5	2
5	1-861-010032-11	WASHER, FLAT 3/8W	12
6	103-0924	NUT, WING 3/8-16	4
7	129893	LAMP, YELLOW TURN SIGNAL STUD MOUNT	2
8	129894	LAMP, RED TURN SIGNAL STUD MOUNT	2
9	-----	FRAME WELDMENT	REF
10	139132	BRACKET, LAMP MOUNTING SWING	4
11	139133	BRACKET, LAMP MOUNTING STATIONARY	4
12	150116	HARNESS/RECEPTACLE ASSEMBLY	1
13	167965	HARNESS, JUMPER T-POWER	2
14	3-272-010010	CONNECTOR, ELECT 4 POLE MALE	4
15	3-272-010021	ELECT BUTT SPLICE 16/14 W/ SEAL	3
16	W214S-1	CABLE, 2 WIRE 14AWG PVCJKT 105	AR

Eastern Wrecker Sales, Inc. - www.easternwrecker.com - 919-553-4038

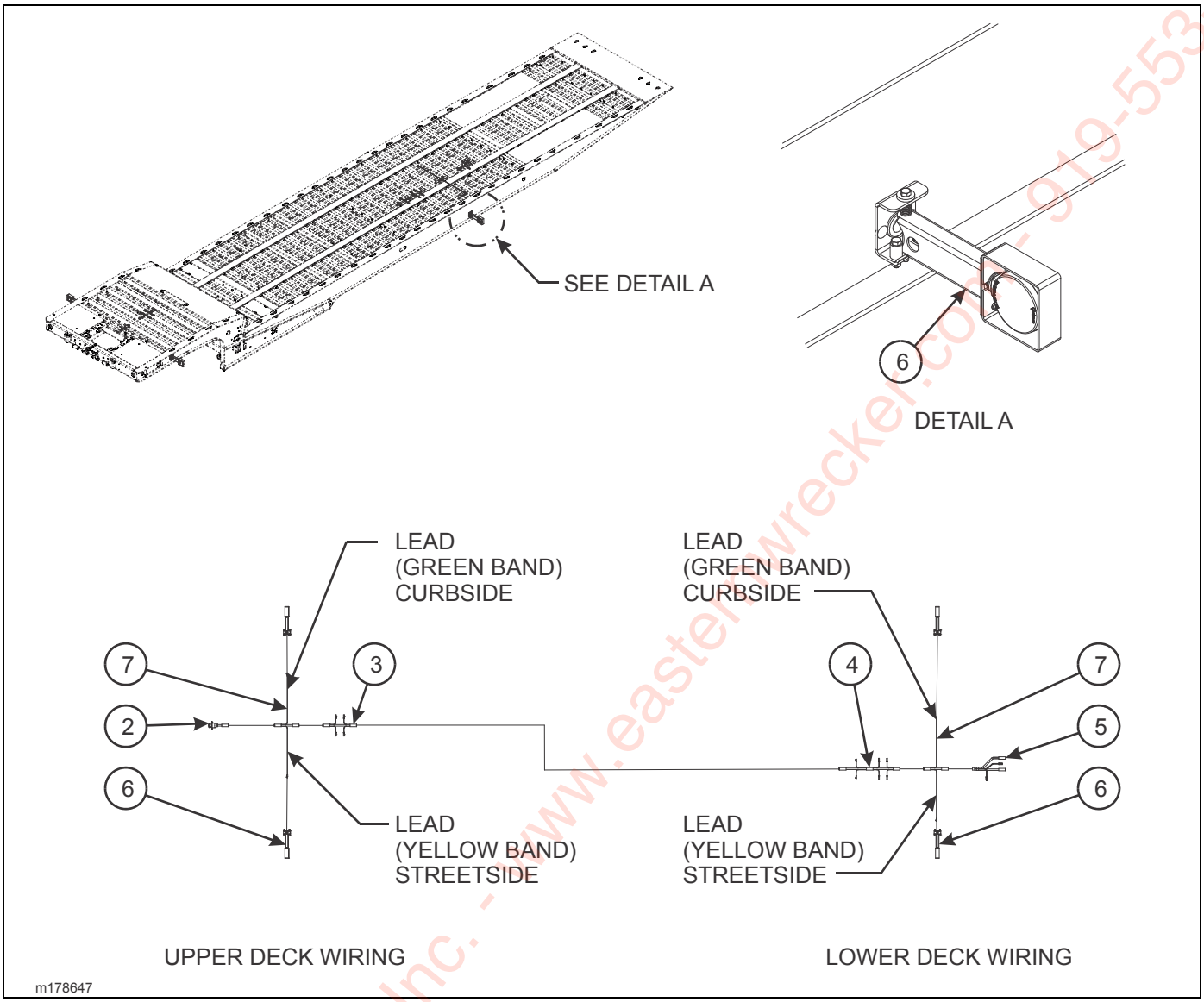

Figure 2-169: Swingout Light Installation (Option)

SWINGOUT LIGHT INSTALLATION (OPTION)

ITEM	PART NO.	DESCRIPTION	QTY.		
	178647	SWINGOUT LIGHT INSTALLATION			
1	1-796-010003-02	TIE, STRAP PLASTIC (NOT SHOWN)	24	12	12
2	143100	HARNESS, 7 WAY RECEPTACLE	REF	REF	REF
3	143101	HARNESS, FRONT MAIN	REF	REF	REF
4	143102	HARNESS, BED MAIN	REF	REF	REF
5	143103	HARNESS, E-CHAIN	REF	REF	REF
6	176420	SWING ARM LIGHT ASSEMBLY (SEE PAGE 2-299)	4	2	2
7	176432	HARNESS JUMPER EMERGENCY FLASH	2	1	1

Eastern Wrecker Sales, Inc. - www.easternwrecker.com - 919-553-4038

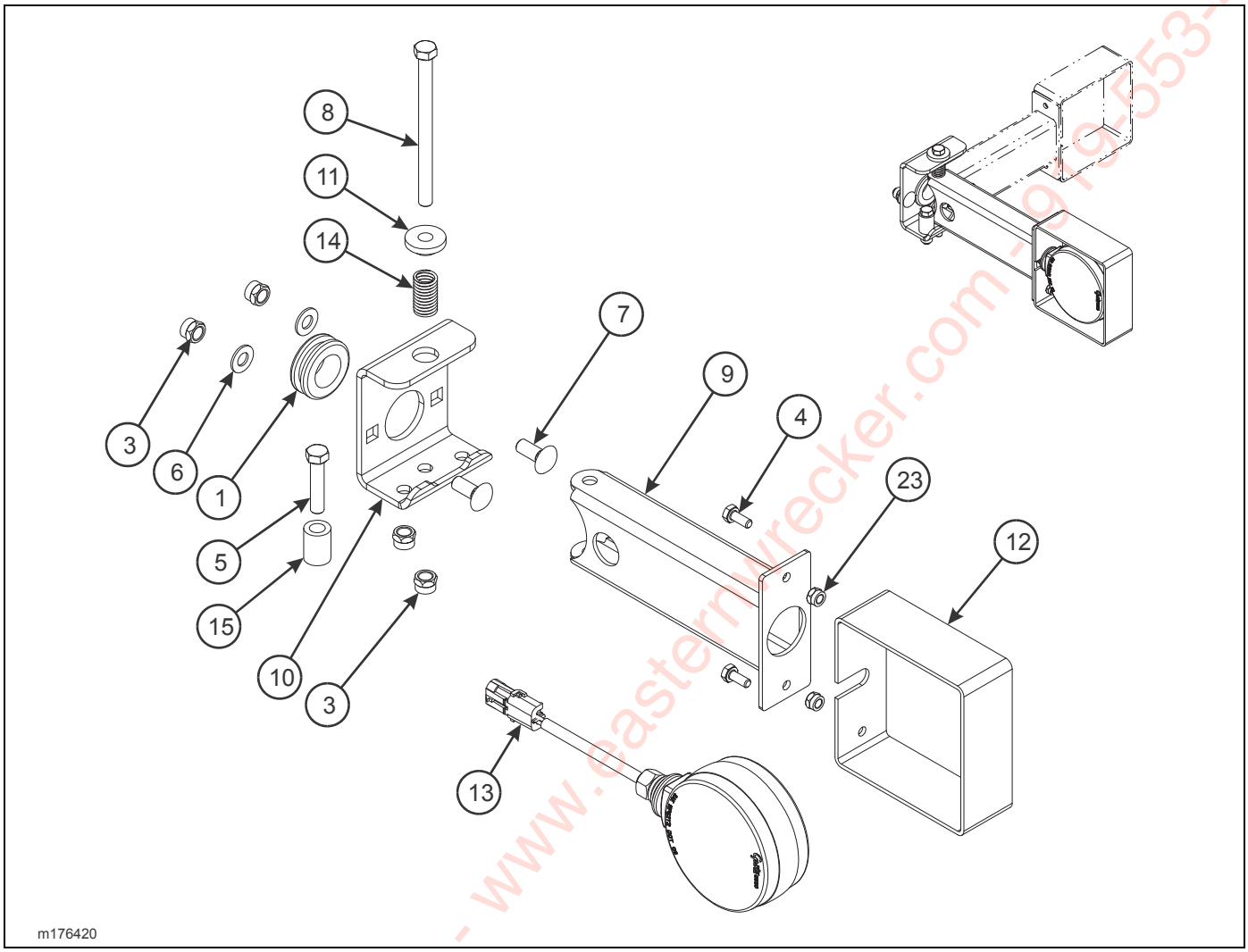

Figure 2-170: Swingout Light Installation (Option)

SWINGOUT LIGHT INSTALLATION (OPTION)

ITEM	PART NO.	DESCRIPTION	QTY.
	176420	SWING ARM LIGHT ASSEMBLY	
1	1-343-010007	GROMMET	1
2	1-512-010005-01	NUT, HEX LOCK 1/4-20 GRB	2
3	1-512-010005-05	NUT, HEX LOCK 3/8-16 GRB	4
4	1-654-010047-03	SCREW, HEX HEAD CAP 1/4-20 X 5/8 GR5	2
5	1-654-010051-08	SCREW, HEX HEAD CAP 3/8-16 X 1-3/4 GR5	1
6	1-861-010032-10	WASHER, FLAT 3/8N	2
7	111276	SCREW, RD HEAD SQ NECK 3/8-16 X 1 GR5	2
8	172882	SCREW, HEX HEAD CAP 3/8-16 X 5 GR5	1
9	176421	LIGHT SWING-ARM WELDMENT	1
10	176424	BRACKET MOUNTING, SWING-ARM LIGHT	1
11	176425	WASHER, STEP	1
12	176440	MOUNT/GUARD, PEDESTAL LIGHT	1
13	178384	LIGHT, YELLOW LED 4” DOUBLE FACE	1
14	178389	SPRING, COMPRESSION SWING-ARM LIGHT	1
15	2-150-010240	BUSHING, STOP SPRAY SHIELD	1

Eastern Wrecker Sales, Inc. - www.easternwrecker.com - 919-553-4038

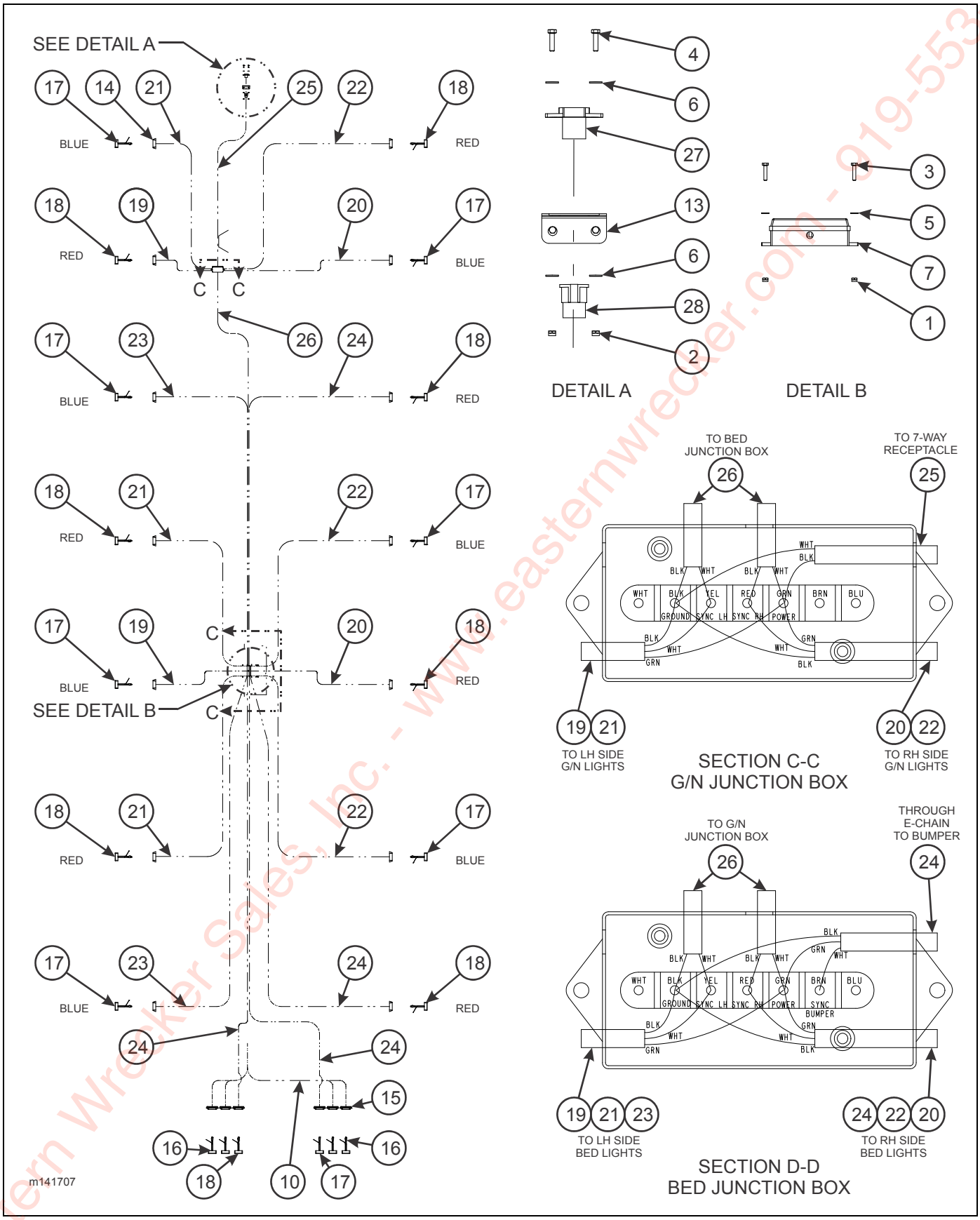

Figure 2-171: Strobe Installation (Option)

Eastern Wrecker Sales, Inc. - www.easternwrecker.com - 919-553-4038

STROBE INSTALLATION (OPTION)

ITEM	PART NO.	DESCRIPTION	QTY.
	141707	STOBE INSTALLATION	
1	1-512-010005-01	NUT, HEX LOCK 1/4-20 GRB	6
2	1-512-010005-03	NUT, HEX LOCK 5/16-18 GRB	2
3	1-654-010027-7	SCREW, HEX HEAD CAP 1/4-20 X 1-1/4 GR8	6
4	1-654-010049-06	SCREW, HEX HEAD CAP 5/16-18 X 1-1/4 GR5	2
5	1-861-010032-06	WASHER, FLAT 1/4N	8
6	1-861-010032-09	WASHER, FLAT 5/16W	4
7	750-029	JUNCTION BOX, 7 STUD	2
10	114581	HARNESS, MOD BUMPER	1
13	140815	BRACKET, 7-WAY BULKHEAD MOUNT	1
14	140816	GROMMET, LIGHT	6
15	140817	MOUNT, LIGHT GROMMET FLANGE	6
16	141694	LIGHT, MOD RED S/T/T	4
17	141695	LIGHT, MOD WARNING WHT/BLU	8
18	141696	LIGHT, MOD WARNING WHT/RED	8
19	141698	HARNESS, LIGHT 3 COND X 36	2
20	141699	HARNESS, LIGHT 3 COND X 84	2
21	141700	HARNESS, LIGHT 3 COND X 136	3
22	141701	HARNESS, LIGHT 3 COND X 176	3
23	141702	HARNESS, LIGHT 3 COND X 236	2
24	141703	HARNESS, LIGHT 3 COND X 276	4
25	141705	HARNESS, LIGHT 2 COND X 152	1
26	141706	HARNESS, LIGHT 2 COND X 336	2
27	59S-7	RECEPTACLE, 7-PIN	1
28	59W-2-3	RUBBER BOOT	1

Eastern Wrecker Sales, Inc. - www.easternwrecker.com - 919-553-4038

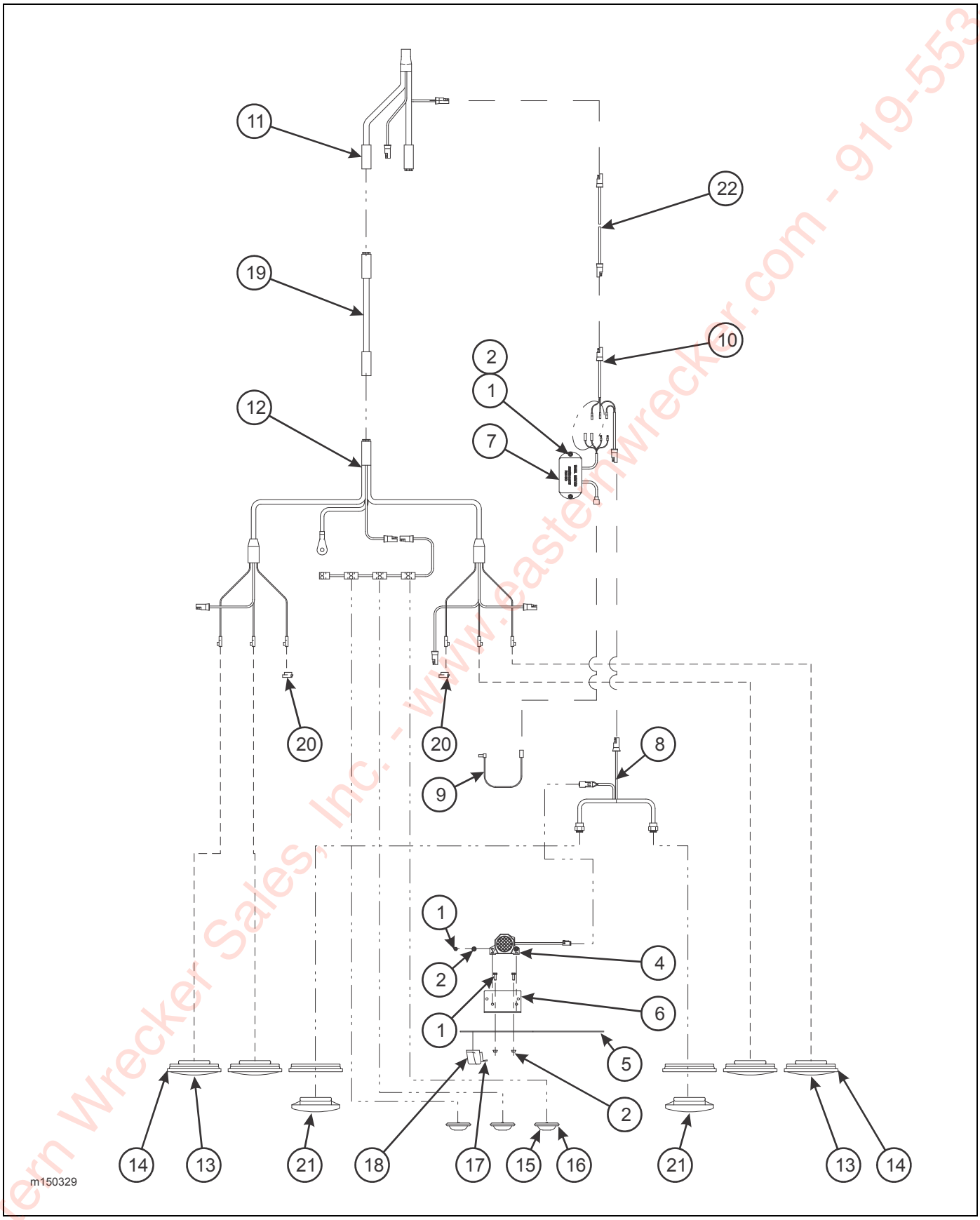

Figure 2-172: Backup Alarm/Light Installation (Option)

Eastern Wrecker Sales, Inc. - www.easternwrecker.com - 919-553-4038

BACKUP ALARM/LIGHT INSTALLATION (OPTION)

ITEM	PART NO.	DESCRIPTION	QTY.
	150329	BACKUP ALARM/LIGHT INSTALLATION	
1	1-654-010047-04	SCREW, HEX HEAD CAP 1/4-20 X 3/4 GR5	6
2	108417	NUT, HEX FLANGE SPIRALOCK 1/4-20	6
4	117997	ALARM, dB ADJUSTING SMART BACKUP	1
5	119531	PLATE, TAG MOUNT	REF
6	127991	BRACKET, BACKUP ALARM MOUNT	1
7	150072	REVERSE DETN MODULE AND SENSOR	1
8	168872	HARNESS, BACKUP LIGHT/ALARM	1
9	137559	SENSOR, DIRECTIONAL CABLE 6.5’	1
10	150074	HARNESS, MODULE/ALARM	1
11	143103	HARNESS, E-CHAIN	REF
12	143104	HARNESS, BUMPER	REF
13	143113	LIGHT, RED LED OVAL STT	REF
14	143114	GROMMET, OVAL	REF
15	143115	LIGHT, RED LED RECTANGLE CLEARANCE	REF
16	143116	GROMMET, RECTANGLE	REF
17	143117	LIGHT, CLEAR LED LICENSE	REF
18	143118	BRACKET, LIGHT LICENSE	REF
19	143166	HARNESS, EXT 48”	REF
20	144608	DUMMY PLUG FOR FEMALE PLUG	2
21	150330	GROTE LED BACKUP CLEAR	2
22	3-368-010252	HARNESS ASSEMBLY, BULKHEAD EXTENSION	1

Eastern Wrecker Sales, Inc. - www.easternwrecker.com - 919-553-4038

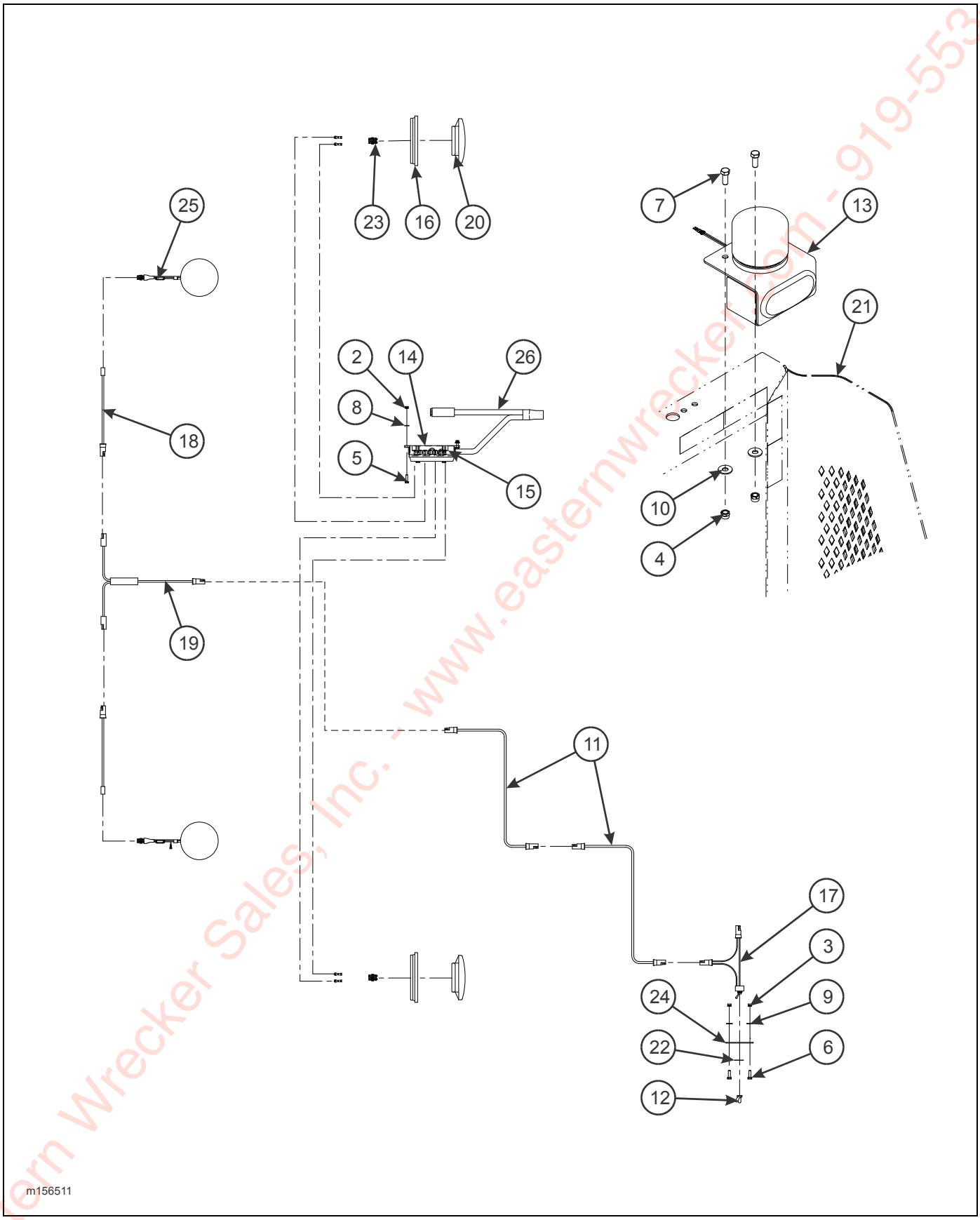

Figure 2-173: Strobe and Turn Bulkhead Installation (Option)

Eastern Wrecker Sales, Inc. - www.easternwrecker.com - 919-553-4038

STROBE AND TURN BULKHEAD INSTALLATION (OPTION)

ITEM	PART NO.	DESCRIPTION	QTY.
	156511	STROBE AND TURN BULKHEAD INSTALLATION	
1	1-822-010002	TRIM-LOCK 3/16 (NOT SHOWN)	AR
2	1-512-010005-01	NUT, HEX LOCK 1/4-20 GRB	2
3	1-512-010005-03	NUT, HEX LOCK 5/16-18 GRB	2
4	1-512-010005-09	NUT, HEX LOCK 1/2-13 GRB	4
5	1-654-010047-06	SCREW, HEX HEAD CAP 1/4-20 X 1 GR5	2
6	1-654-010049-05	SCREW, HEX HEAD CAP 5/16-18 X 1 GR5	4
7	1-654-010055-02	SCREW, HEX HEAD CAP 1/2-13 X 1-1/4 GR5	4
8	1-861-010032-06	WASHER, FLAT 1/4N	2
9	1-861-010032-09	WASHER, FLAT 5/16W	2
10	1-861-010032-15	WASHER, FLAT 1/2W	4
11	3-368-010252	HARNESS ASSEMBLY, BULKHEAD LIGHT EXT	1
12	81264	RUBBER BOOT FOR ELECT SWITCH	1
13	142529	MOUNT WELDMENT, STROBE AND TURN	2
14	750-029	JUNCTION BOX 7 STUD	1
15	32002	TERMINAL	4
16	60700	GROMMET, TRUCK LITE LIGHT	2
17	164052	HARNESS, 60” BRANCH WORK LIGHT	2
18	150117	TOGGLE SWITCH SEALED SPST	1
19	169853	HARNESS, T POWER BRANCH	1
20	121377	LIGHT YELLOW LED S/T/T	2
21	128136	BULKHEAD INSTALLATION (SEE PAGE 2-109)	REF
22	130116	DECAL, ON/OFF LIGHT	1
23	142530	HARNESS, TURN BULKHEAD MOUNT	2
24	137987	MOUNT, ELECT SWITCH	1
25	140328	STROBE LIGHT MOD ASSY	2
26	146929	HARNESS Y SPLITTER GROTE	1

Eastern Wrecker Sales, Inc. - www.easternwrecker.com - 919-556-4038

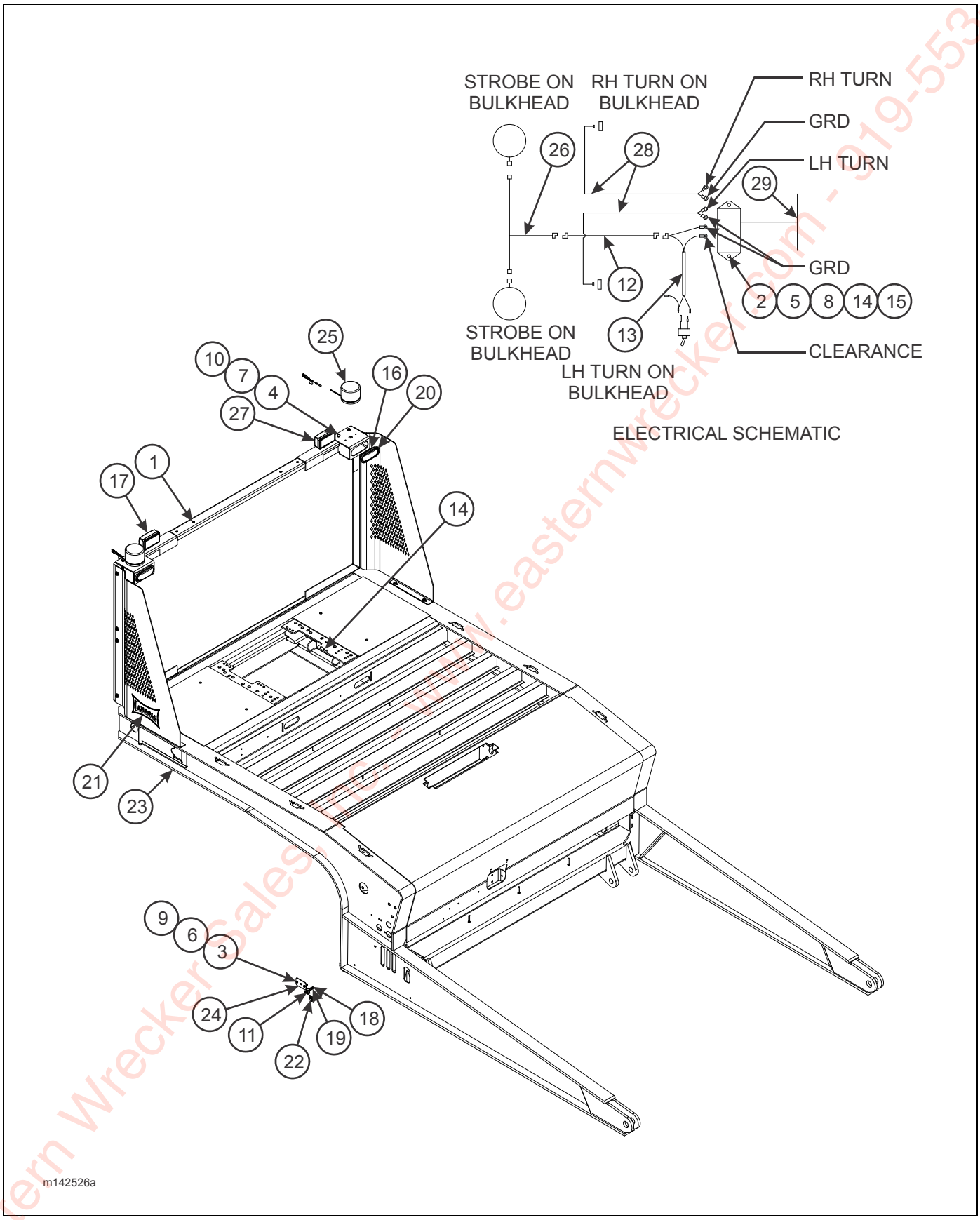

Figure 2-174: Strobe and Turn Light Installation for Bulkhead (Option)

Eastern Wrecker Sales, Inc. - www.easternwrecker.com - 919-553-4038

STROBE AND TURN LIGHT INSTALLATION FOR BULKHEAD (OPTION)

ITEM	PART NO.	DESCRIPTION	QTY.
	142526	STROBE AND TURN LIGHT INST FOR BULKHEAD (OPTION)	
1	1-343-010007	GROMMET	4
2	1-512-010005-01	NUT, HEX LOCK 1/4-20 GRB	2
3	1-512-010005-03	NUT, HEX LOCK 5/16-18 GRB	2
4	1-512-010005-09	NUT, HEX LOCK 1/2-13 GRB	4
5	1-654-010047-06	SCREW, HEX HEAD CAP 1/4-20 X 1 GR5	2
6	1-654-010049-05	SCREW, HEX HEAD CAP 5/16-18 X 1 GR5	2
7	1-654-010055-02	SCREW, HEX HEAD CAP 1/2-13 X 1-1/4 GR5	4
8	1-861-010032-06	WASHER, FLAT 1/4N	2
9	1-861-010032-09	WASHER, FLAT 5/16W	2
10	1-861-010032-15	WASHER, FLAT 1/2W	4
11	3-272-010017	TOGGLE SWITCH SEALED SPST	1
12	3-368-010252	HARNESS ASSEMBLY, BULKHEAD LIGHT	1
13	3-368-010253	HARNESS ASSEMBLY, CONTROL PANEL	1
14	750-029	JUNCTION BOX, 7 STUD	1
15	32002	TERMINAL, 12-10 W/ #10 RING WAY	4
16	60700	GROMMET, TRUCK LITE LIGHT	2
17	64181	RECT QUARTZ HALOGEN LAMP	REF
18	104043	CONNECTOR, MALE	1
19	104044	CONNECTOR, FEMALE	1
20	121377	LIGHT, YELLOW LED S/T/T	2
21	128136	BULKHEAD INSTALLATION (SEE PAGE 2-109)	REF
22	130116	DECAL, ON/OFF LIGHT	1
23	130662	GOOSENECK WELDMENT	REF
24	137987	MOUNT, ELECTRIC SWITCH	1
25	140328	STROBE LIGHT MOD ASSEMBLY	2
26	140330	HARNESS, STROBE BEACON BULKHEAD	1
27	142529	MOUNT WELDMENT, STROBE AND TURN	2
28	142530	HARNESS, TURN BULKHEAD MOUNT	2
29	146929	HARNESS, Y SPLITTER GROTE	1

Eastern Wrecker Sales, Inc. - www.easternwrecker.com - 919-553-4038

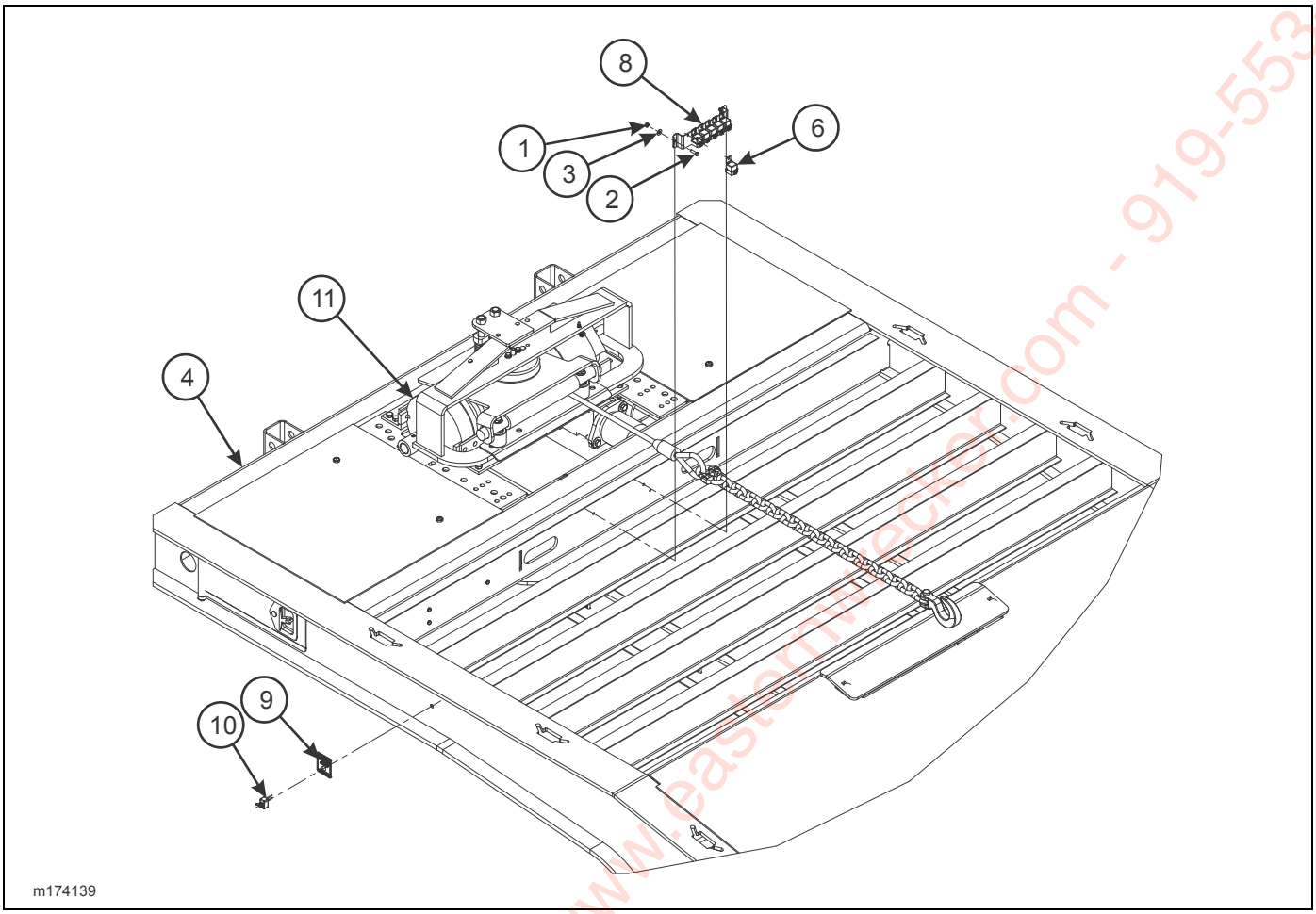

Figure 2-175: Electrical Disconnect Switch Installation (Option)

ELECTRICAL DISCONNECT SWITCH INSTALLATION (OPTION)

ITEM	PART NO.	DESCRIPTION	QTY.
	174139	ELECTRICAL DISCONNECT SWITCH INSTALLATION (OPTION)	
1	1-512-010004-05	NUT, HEX LOCK 1/4-20 GRA	2
2	1-654-010047-06	SCREW, HEX HEAD CAP 1/4-20 X 1 GR5	2
3	1-861-010032-07	WASHER, FLAT 1/4	3
4	-----	FRAME ASSEMBLY, G/N	REF
5	164053	HARNESS, BRANCH WORK LIGHT 102” (NOT SHOWN)	1
6	169534	RELAY, SEALED 20/40A	REF
7	174140	HARNESS, TRAILER ELECT DISCONNECT SWITCH (NOT SHOWN)	1
8	174141	BRACKET, RELAY MOUNT	REF
9	174142	DECAL, ELECTRICAL DISCONNECT SWITCH	1
10	3-272-010017	TOGGLE SWITCH, SEALED	REF
11	-----	WINCH INSTALLATION 20K UPPER DECK	REF

Eastern Wacker Sales, Inc. www.easternwacker.com - 919-553-4038

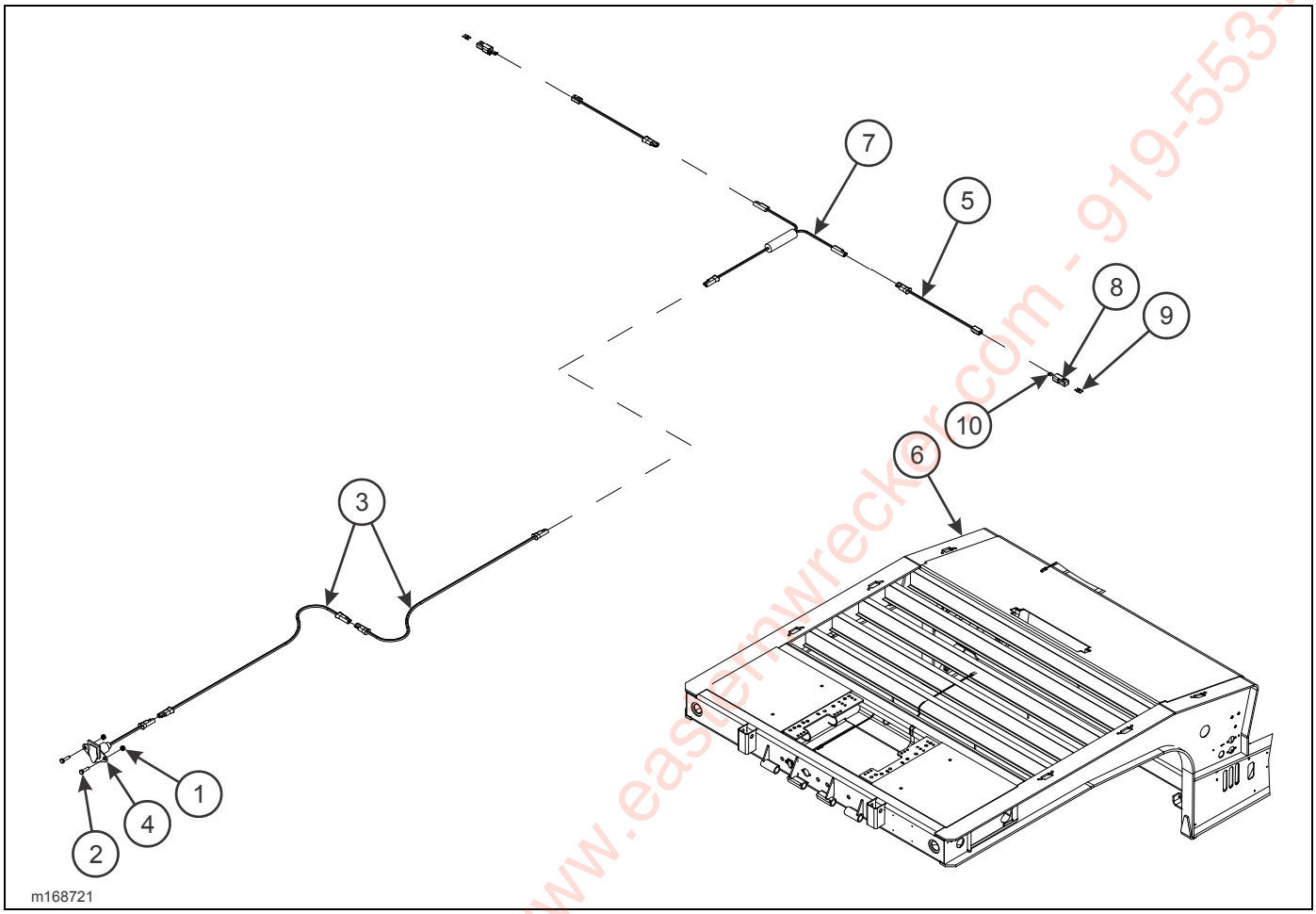

Figure 2-176: Front/Rear Harness Installation (Option)

FRONT/REAR HARNESS INSTALLATION (OPTION)

ITEM	PART NO.	DESCRIPTION	QTY.
	168721	FRONT/REAR HARNESS INSTALLATION (OPTION)	
1	1-512-010005-01	NUT, HEX LOCK 1/4-20 GRB	1
2	1-654-010047-06	SCREW, HEX HEAD CAP 1/4-20 X 1 GR5	4
3	150111	HARNESS 300”	1
4	150116	HARNESS/RECEPTACLE ASSEMBLY	1
5	164052	HARNESS, 60” BRANCH WORK LIGHT	2
6	168720	FRAME, MOD 4-POLE RECEPTACLE FT PLT	1
7	169853	HARNESS, JUMPER T-POWER	1
8	622-2967-001	RECEPTACLE, 2 POS (MALE)	2
9	622-2967-014	PIN, 14-16 AWG	4
10	622-2967-017	WEDGE, 2 POS RECEPTACLE	2

Eastern Wrecker Sales, Inc. www.easternwrecker.com - 919-553-4038

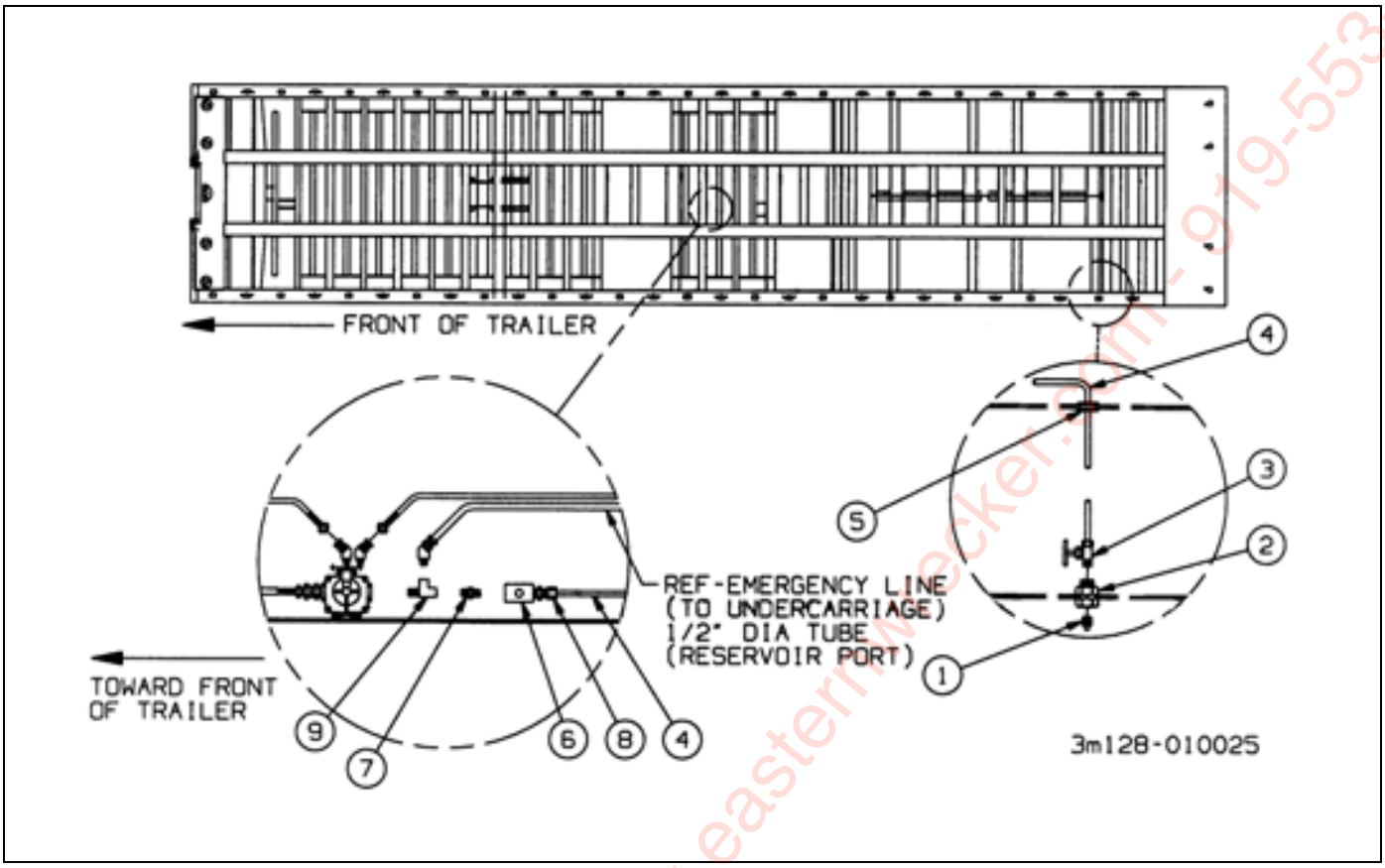

Figure 2-177: Air Outlet Accessory (Option)

AIR OUTLET ASSEMBLY (OPTION)

ITEM	PART NO.	DESCRIPTION	QTY.
	3-128-010025	AIR OUTLET ACCESSORY	
1	1-560-010002-02	PLUG PIPE	1
2	1-297-010022-02	FITTING AIR ANCHOR COUPLING	1
3	A6760S	SHUT OFF VALVE	1
4	1-833-010002	TUBING NYLON	20
5	1-343-010007	GROMMET	1
6	905-54-107	BRAKE PROTECTION VALVE	1
	167692	FILTER	1
7	2083-8-4S	NIPPLE HEX 1/2PIPE - 1/4PIPE	1
8	1-297-010007-11	FITTING, AIR	1
9	1-297-010018-04	FITTING, AIR BR TEE	1

Eastern Wrecker Sales, Inc. www.easternwrecker.com 919-553-4038

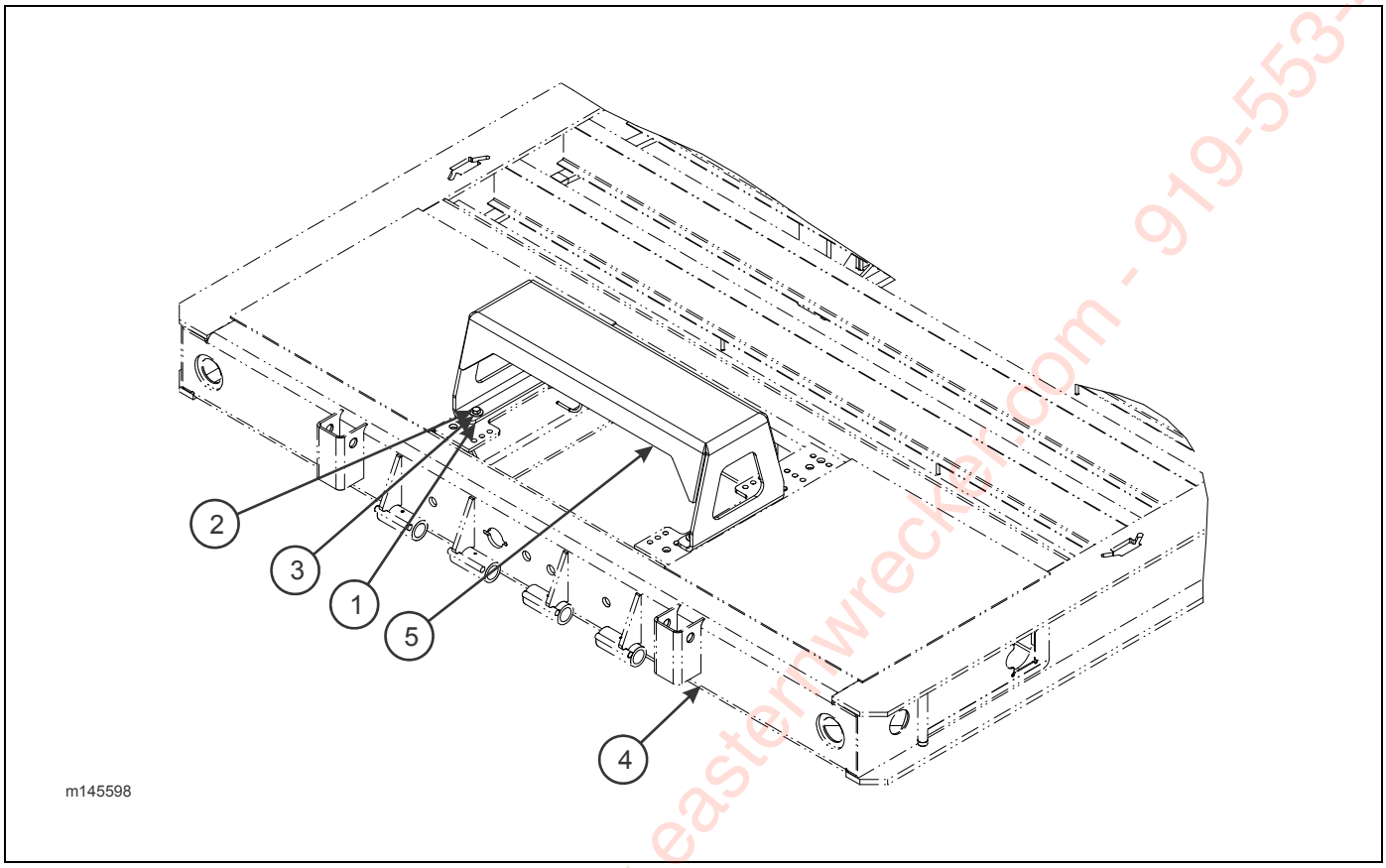

Figure 2-178: Special Bulkhead Installation (Option)

12/20K WINCH GUARD INSTALLATION (BRADEN) (OPTION)

ITEM	PART NO.	DESCRIPTION	QTY.
	145598	12/20K WINCH GUARD INSTALLATION	
1	1-512-010005-09	NUT, HEX LOCK 1/2-13	4
2	1-654-010055-05	SCREW, HEX HEAD CAP 1/2-13 X 2 GR5	4
3	1-861-010032-15	WASHER, FLAT 1/2	8
4	-----	GOOSENECK WELDMENT	REF
5	145599	GUARD, WINCH 12/20K BRADEN	1

Eastern Wrecker Sales, Inc. www.easternwrecker.com - 919-553-4038

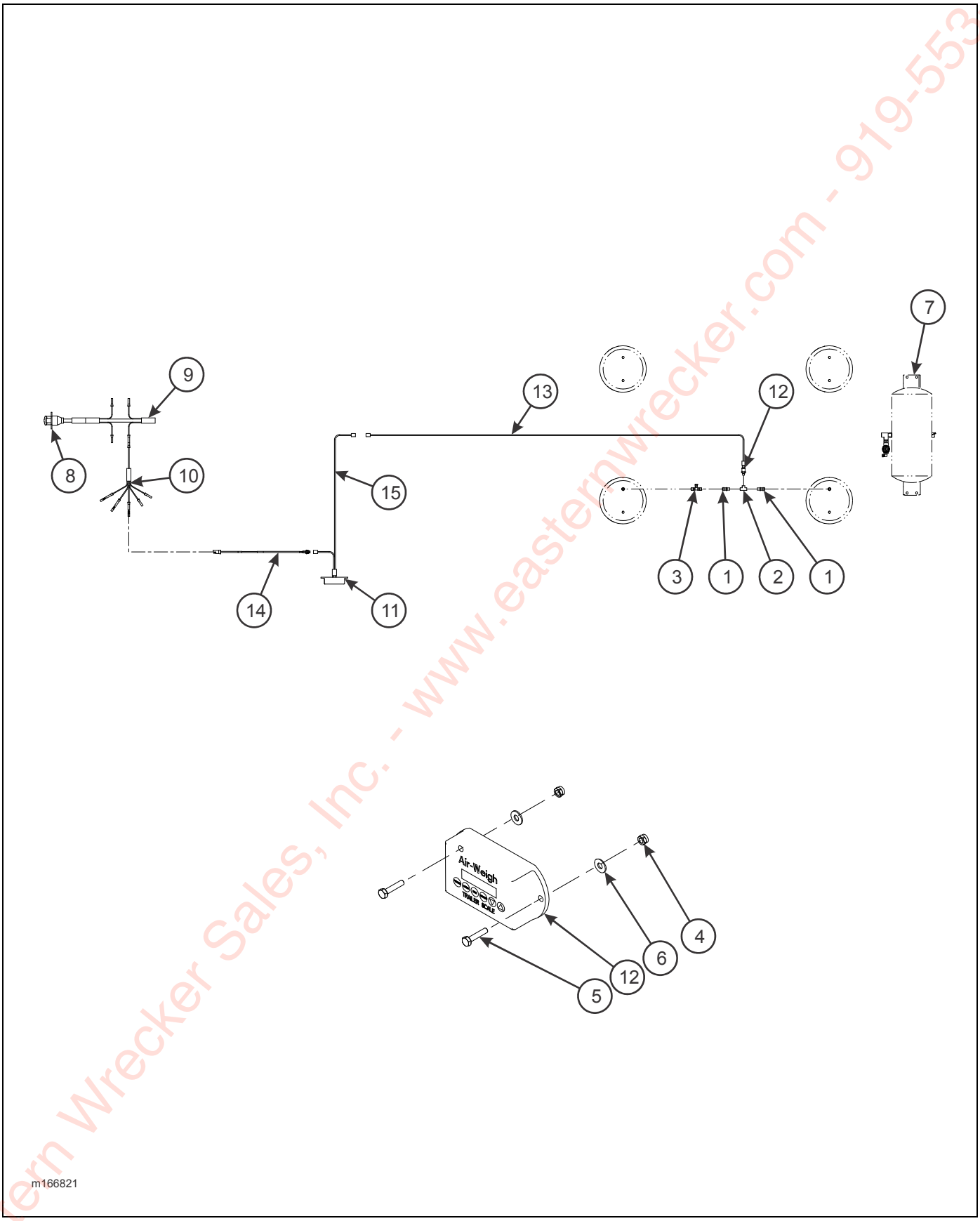

Figure 2-179: Air Digital Scale, Loadmaxx System (Option)

Eastern Wrecker Sales, Inc. - www.easternwrecker.com - 919-553-4038

AIR DIGITAL SCALE, LOADMAXX SYSTEM (OPTION)

ITEM	PART NO.	DESCRIPTION	QTY.
	166821	SCALE INSTALLATION, LOADMAXX SYSTEM	
1	1-297-010007-11	FITTING AIR	2
2	1-297-010009-02	FITTING, AIR PIPE TEE	1
3	1-297-010010-04	FITTING AIR UNION TEE	REF
4	1-512-010005-01	NUT, HEX LOCK 1/4-20 GRB	REF
5	1-654-010047-07	SCREW, HEX HEAD CAP 1/4-20 X 1-1/4 GR5	REF
6	1-861-010032-07	WASHER, FLAT 1/4	REF
7	103082	SUSPENSION, AIR RLU A/R TANDEM (SEE PAGE 2-79)	REF
8	143100	HARNESS, 7 WAY RECEPTACLE	REF
9	143101	HARNESS, FRONT MAIN	REF
10	150093	HARNESS, 5 AUXILIARY BRANCHES	REF
11	172437	SCALE, AIR DIGITAL MODIFIED (INCL. ITEMS 12 - 15)	1
12	149543	SENSOR ASSEMBLY, 5V 3/8” BRASS	1
13	166001	CABLE, AW5800, 2 PART SENSOR 50'	1
14	166002	CABLE, AW5800 TRAILER POWER BLUNT CUT 15'	1
15	142895	CABLE, AW5800, TRAILER SCALE INTERFACE 2"	1

Eastern Wrecker Sales, Inc. - www.easternwrecker.com - 919-553-4038

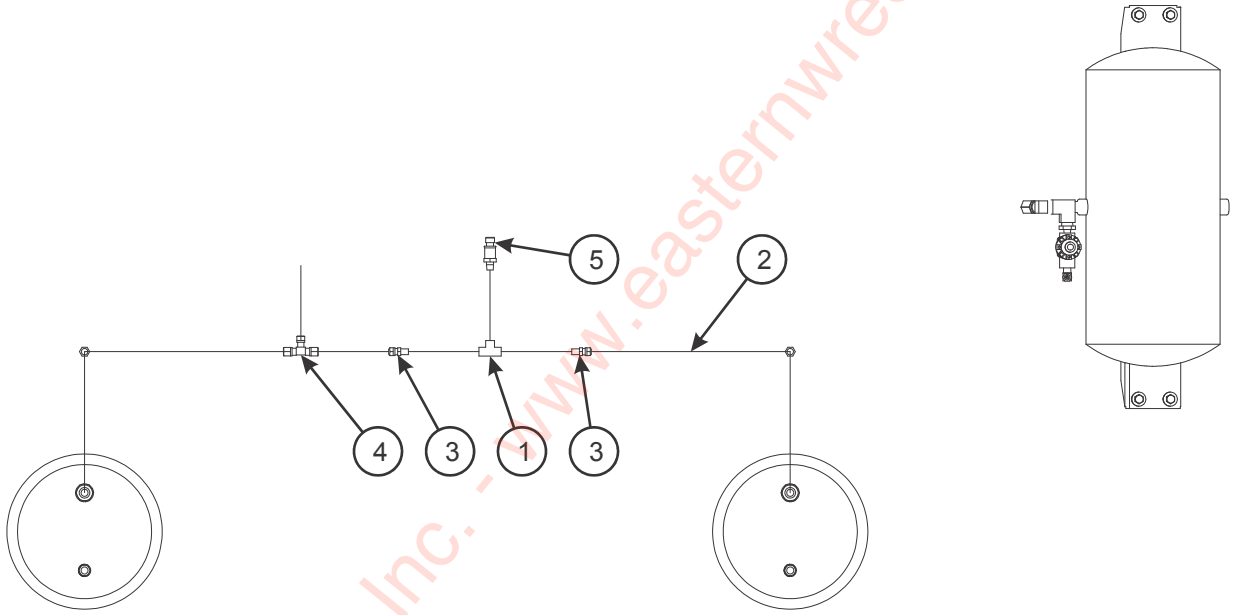

Figure 2-180: Air Digital Scale, Loadmaxx System Arctic (Option)

Eastern Wrecker Sales, Inc. - www.easternwrecker.com - 919-553-4038

AIR DIGITAL SCALE, LOADMAXX SYSTEM ARCTIC (OPTION)

ITEM	PART NO.	DESCRIPTION	QTY.
	173866	SCALE INSTALLATION, LOADMAXX SYSTEM ARCTIC	
1	1-297-010009-02	FITTING, AIR PIPE TEE	1
2	126630	TUBING, NYLON 3/8	REF
3	126672	FITTING, COMPRESSION	2
4	139930	SUSPENSION, AIR SYS RLU A/R ARCTIC (NOT SHOWN) (SEE PAGE 2-83)	REF
5	172437	SCALE, AIR DIGITAL MODIFIED (SEE PAGE 2-313)	1

Eastern Wrecker Sales, Inc. - www.easternwrecker.com - 919-553-4038

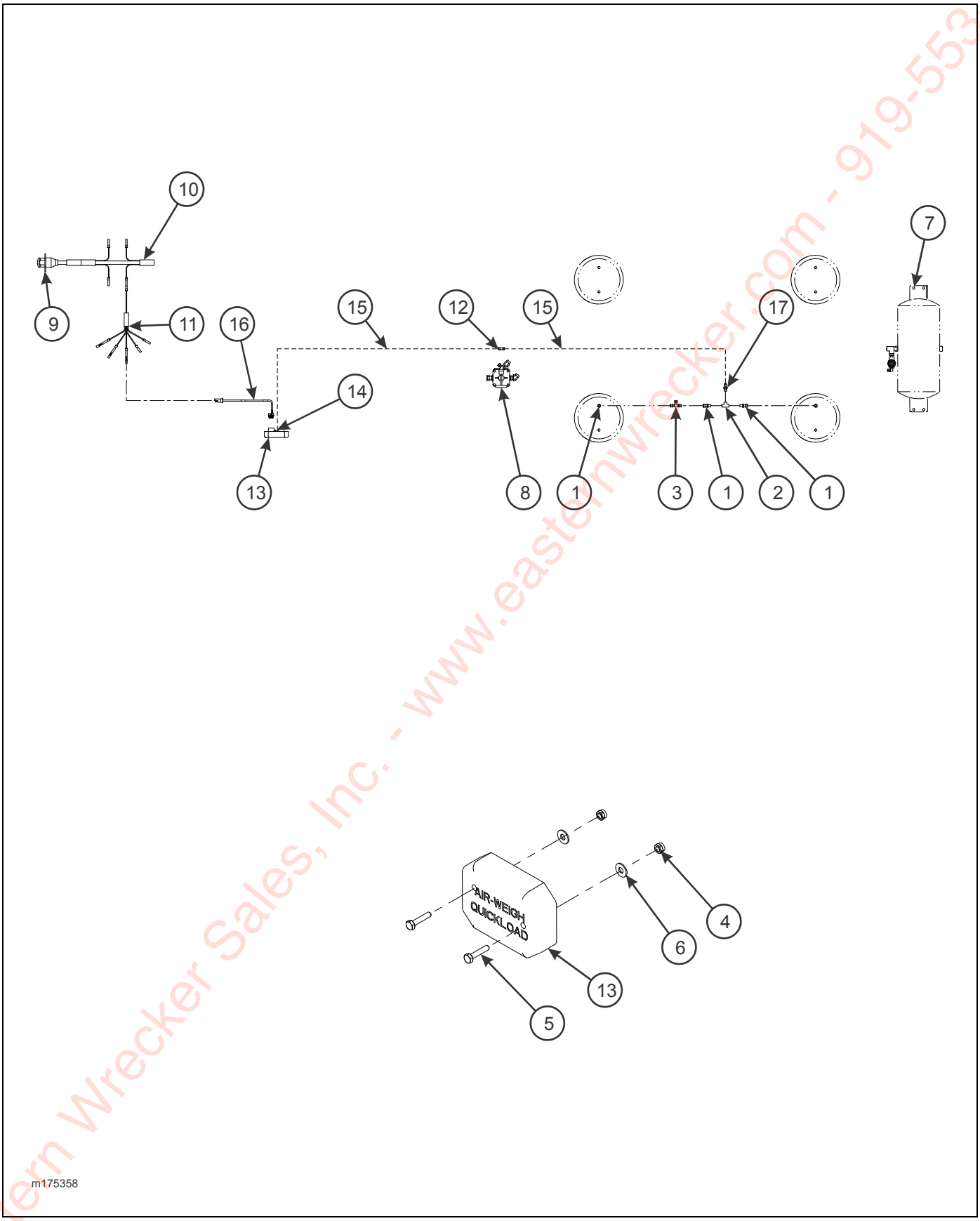

Figure 2-181: Air Digital Scale, Quickload System (Option)

Eastern Wrecker Sales, Inc. - www.easternwrecker.com - 919-553-4038

AIR DIGITAL SCALE, QUICKLOAD SYSTEM (OPTION)

ITEM	PART NO.	DESCRIPTION	QTY.
	175358	SCALE INSTALLATION, QUICKLOAD SYSTEM	
1	1-297-010007-11	FITTING AIR	2
2	1-297-010009-02	FITTING, AIR PIPE TEE	1
3	1-297-010010-04	FITTING AIR UNION TEE	REF
4	1-512-010005-01	NUT, HEX LOCK 1/4-20 GRB	REF
5	1-654-010047-07	SCREW, HEX HEAD CAP 1/4-20 X 1-1/4 GR5	REF
6	1-861-010032-07	WASHER, FLAT 1/4	REF
7	103082	SUSPENSION, AIR RLU A/R TANDEM (SEE PAGE 2-79)	REF
8	141607	AIR BOOSTER VALVE ASSEMBLY (SEE PAGE 2-43)	REF
9	143100	HARNESS, 7 WAY RECEPTACLE	REF
10	143101	HARNESS, FRONT MAIN	REF
11	150093	HARNESS, 5 AUXILIARY BRANCHES	REF
12	175359	UNION, AIR HOSE	1
13	175360	SCALE, AIR QL (TRAVEL AXLE) MODIFIED (INCL. ITEMS 14 - 17)	1
14	175363	SPRING HOSE CLAMP	1
15	175365	AIR LINE	1
16	184392	CABLE, TRAILER, POWER, BLUNT CUT, 15’	1
17	180221	HOSE BARB FITTING, BRASS	1

Eastern Wrecker Sales, Inc. - www.easternwrecker.com - 919-553-4038

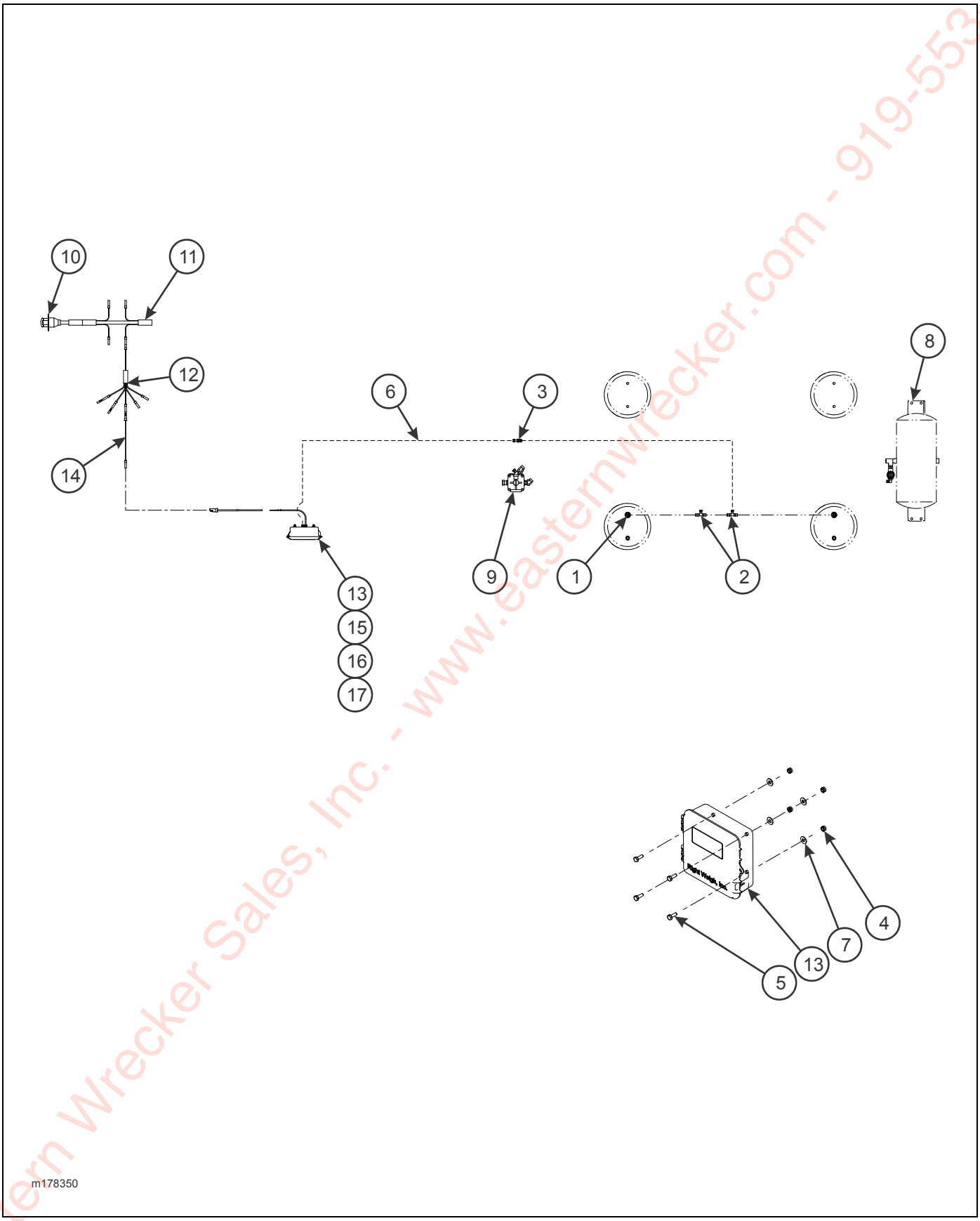

Figure 2-182: Air Digital Scale, Right Weigh System (Option)

Eastern Wrecker Sales, Inc. - www.easternwrecker.com - 919-553-4038

AIR DIGITAL SCALE, RIGHT WEIGH SYSTEM (OPTION)

ITEM	PART NO.	DESCRIPTION	QTY.
	175350	SCALE INSTALLATION, RIGHT WEIGH SYSTEM	
1	1-297-010007-11	FITTING AIR	2
2	1-297-010010-04	FITTING AIR UNION TEE	REF
3	1-297-010014-02	FITTING, AIR	1
4	1-512-010005-01	NUT, HEX LOCK 1/4-20 GRB	REF
5	1-654-010047-04	SCREW, HEX HEAD CAP 1/4-20 X 3/4 GR5	24
6	1-833-010001	TUBING NYLON 1/4 OD	AR
7	1-861-010032-07	WASHER, FLAT 1/4	REF
8	103082	SUSPENSION, AIR RLU A/R TANDEM (SEE PAGE 2-79)	REF
9	141607	AIR BOOSTER VALVE ASSEMBLY (SEE PAGE 2-43)	REF
10	143100	HARNESS, 7 WAY RECEPTACLE	REF
11	143101	HARNESS, FRONT MAIN	REF
12	150093	HARNESS, 5 AUXILIARY BRANCHES	REF
13	170471	HARNESS ASSEMBLY, RIGHT WEIGH (INCL. ITEMS 15 - 17	1
14	3-368-010252	HARNESS ASSEMBLY, BULKHEAD LIGHT EXT	1
15	171159	DIGITAL SCALE	1
16	171160	DIGITAL INSTALLATION KIT	1
17	171161	MOUNTING BOX, BRACKET, AND HARDWARE	1

Eastern Wrecker Sales, Inc. - www.easternwrecker.com - 919-553-4038

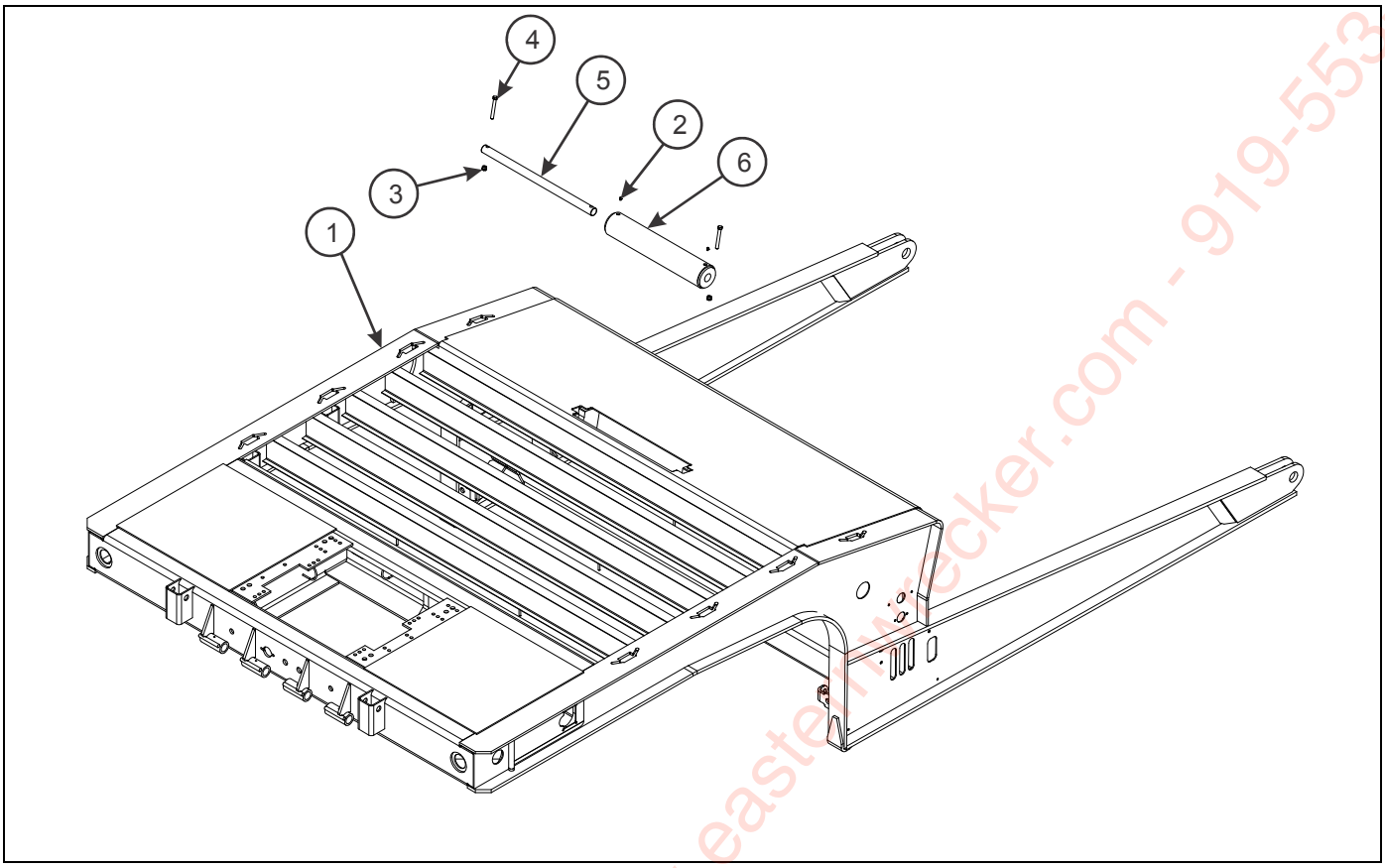

Figure 2-183: Upper Deck Extension Bridge Storage Rack (Option)

UPPER DECK ROLLER INSTALLATION (OPTION)

ITEM	PART NO.	DESCRIPTION	QTY.
	131895	UPPER DECK ROLLER INSTALLATION (OPTION)	
1	130662	GOOSENECK WELDMENT	REF
2	1-298-010001-1	FITTING, GREASE 1/4-28 STR SHORT	2
3	1-512-010005-09	NUT, HEX LOCK 1/2-13 GRB	2
4	1-654-010055-13	SCREW, HEX HEAD CAP 1/2-13 X 4 GR5	2
5	3-642-010134	ROLLER ROD	1
6	3-645-010059	ROLLER WELDMENT, CABLE U/D	1

Eastern Wrecker Sales, Inc. www.easternwrecker.com - 919-553-4038

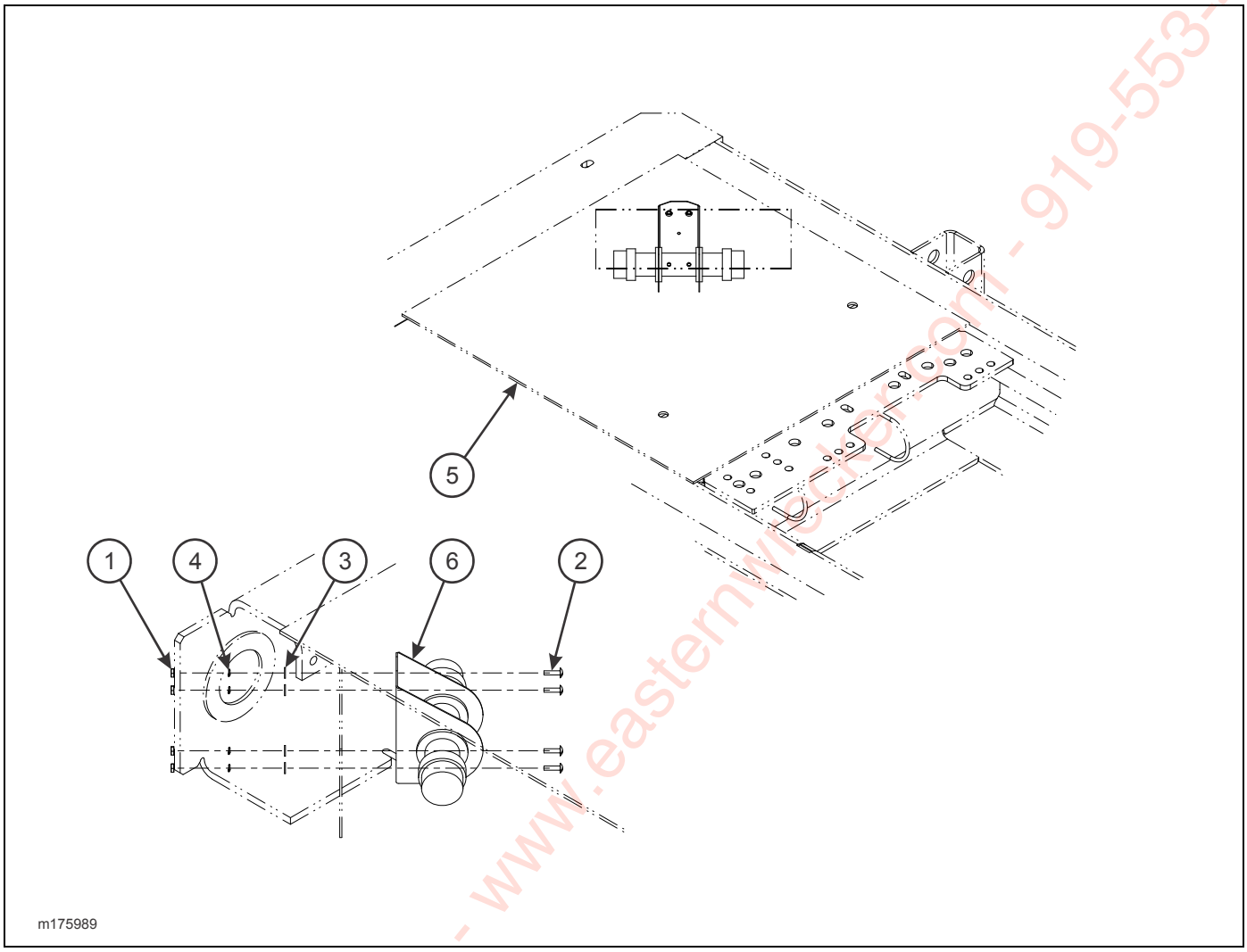

Figure 2-184: Registration Holder Installation (12K Braden) (Option)

REGISTRATION HOLDER INSTALLATION (OPTION)

ITEM	PART NO.	DESCRIPTION	QTY.
	175989	REGISTRATION HOLDER INSTALLATION	
1	1-512-010007-03	NUT, HEX LOCK 10-24	4
2	1-656-010003051	SCREW, RD HEAD SQ NECK 10-24 X 3/4	4
3	1-861-010032-03	WASHER, FLAT #10	4
4	1-861-010034-07	WASHER, FLAT #10	4
5	-----	GOOSENECK WELDMENT	REF
6	174598	REGISTRATION CARD HOLDER	1

Eastern Wrecker Sales, Inc. - www.easternwrecker.com - 919-553-4038

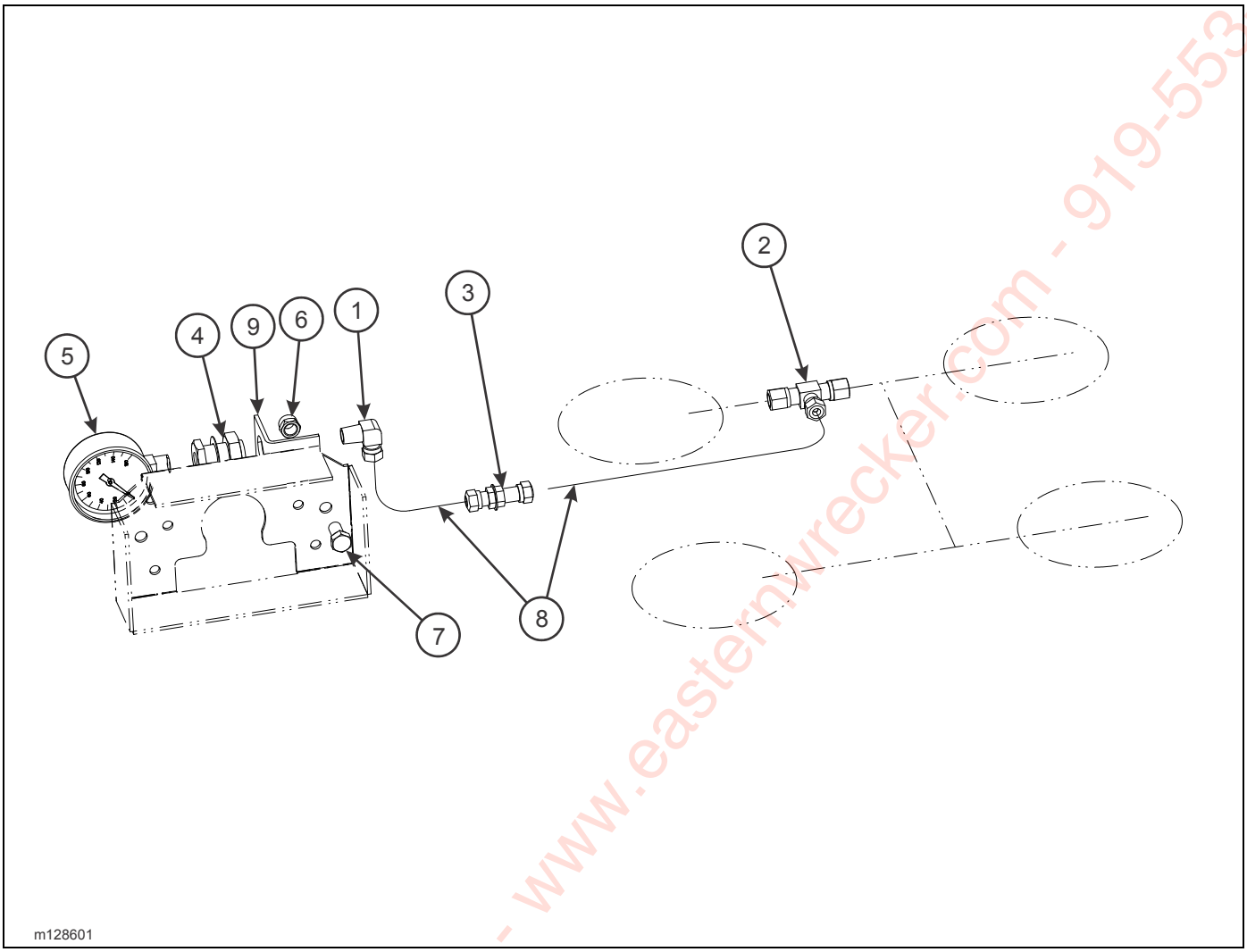

Figure 2-185: Pressure Gauge Installation (Option)

PRESSURE GAUGE INSTALLATION (OPTION)

ITEM	PART NO.	DESCRIPTION	QTY.
	128601	PRESSURE GAUGE INSTALLATION (OPTION)	
1	1-297-010008-07	FITTING, AIR 90	1
2	1-297-010010-04	FITTING, AIR UNION TEE	1
3	1-297-010014-02	FITTING, AIR	1
4	1-297-010022-02	FITTING, AIR ANCHOR	1
5	1-323-010008	GAUGE, PRESSURE 0 - 160 PSI	1
6	1-512-010005-05	NUT, HEX LOCK 3/8-16 GRB	1
7	1-654-010051-03	SCREW, HEX HEAD CAP 3/8-16 X 3/4 GR5	1
8	1-833-010002	TUBING NYLON 3/8	AR
9	3-120-010445	BRACKET, PRESSURE REGULATOR	1

Eastern Wrecker Sales, Inc. - www.easternwrecker.com - 919-553-4038

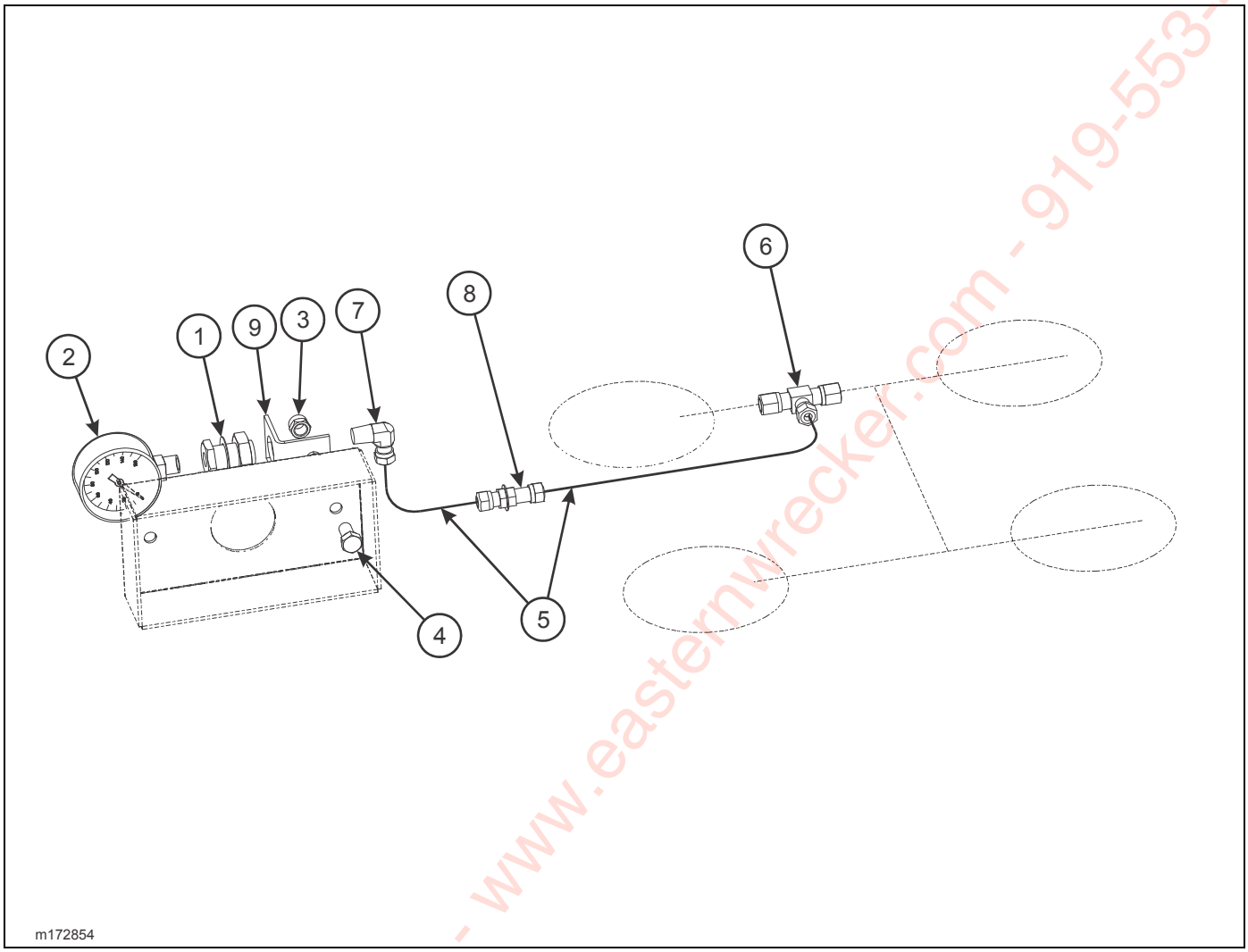

Figure 2-186: Pressure Gauge Installation, Arctic (Option)

PRESSURE GAUGE INSTALLATION, ARCTIC (OPTION)

ITEM	PART NO.	DESCRIPTION	QTY.
	172854	PRESSURE GAUGE INSTALLATION, ARCTIC	
1	1-297-010022-02	FITTING, AIR ANCHOR	1
2	1-323-010008	GAUGE, PRESSURE 0 - 160 PSI	1
3	1-512-010005-05	NUT, HEX LOCK 3/8-16 GRB	1
4	1-654-010051-03	SCREW, HEX HEAD CAP 3/8-16 X 3/4 GR5	1
5	126629	TUBING NYLON 1/4 OD	AR
6	126675	FITTING, COMPRESSION TEE	1
7	126677	FITTING, AIR 90	1
8	172853	FITTING, COMP ALIGN UNION BULKHEAD	1
9	3-120-010445	BRACKET, PRESSURE REGULATOR	1

Eastern Wrecker Sales, Inc. - www.easternwrecker.com - 919-553-4038

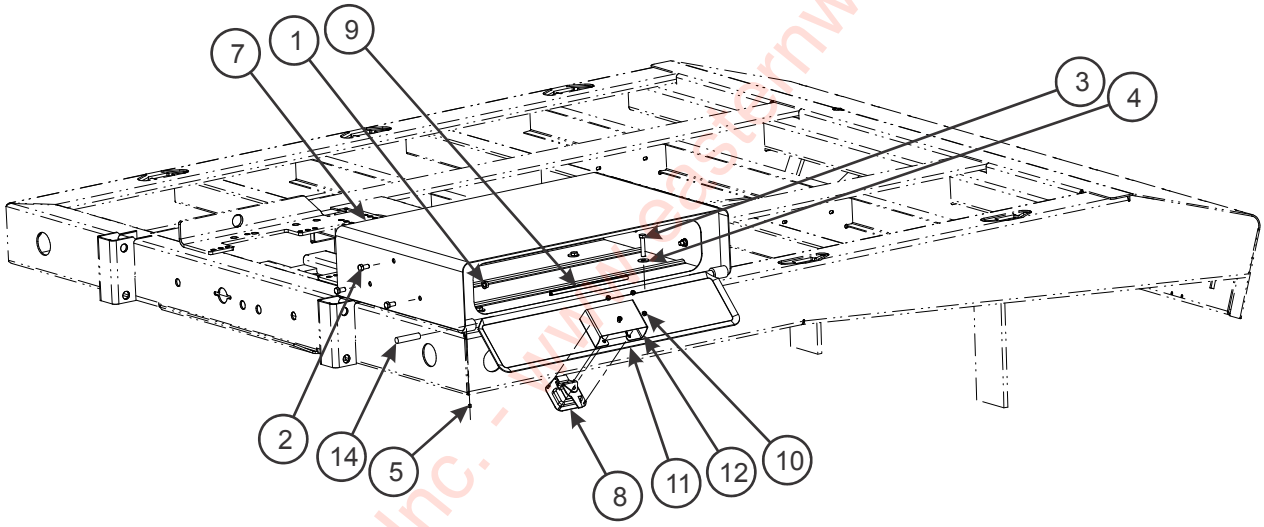

m125399

Figure 2-187: Upper Deck Toolbox Installation (Option)

Eastern Wrecker Sales, Inc. - www.easternwrecker.com - 919-553-4038

UPPER DECK TOOLBOX INSTALLATION (OPTION)

ITEM	PART NO.	DESCRIPTION	QTY.
	125399	UPPER DECK TOOLBOX INSTALLATION	
1	1-510-010003-09	NUT, FLANGE HEAD SERRATED 1/2-13	10
2	1-654-010055-01	SCREW, HEX HEAD CAP 1/2-13 X 1 GR5	6
2	1-654-010055-07	SCREW, HEX HEAD CAP 1/2-13 X 2-1/2 GR5	6
4	1-861-010032-15	WASHER, FLAT 1/2W	16
5	107-0975	SCREW, SET LOCK 5/16-18 X 3/8	2
6	-----	GOOSENECK WELDMENT	REF
7	114808	TOOLBOX WELDMENT	1
8	114814	LATCH, FOLDING T LOCKABLE	1
9	114815	SEAL SPONGE RUBBER TRIM	7
10	115877	NUT, HEAVY HEX 1/4-20 GR5	4
11	116623	DOOR WELDMENT STEEL TOOLBOX	1
12	153420	TOOLBOX LATCH SHIELD	1
14	RPRB59004X3H	BAR ROUND, 3/4DIA X 3-1/2 NYLATRON	2

Eastern Wrecker Sales, Inc. - www.easternwrecker.com - 919-553-4038

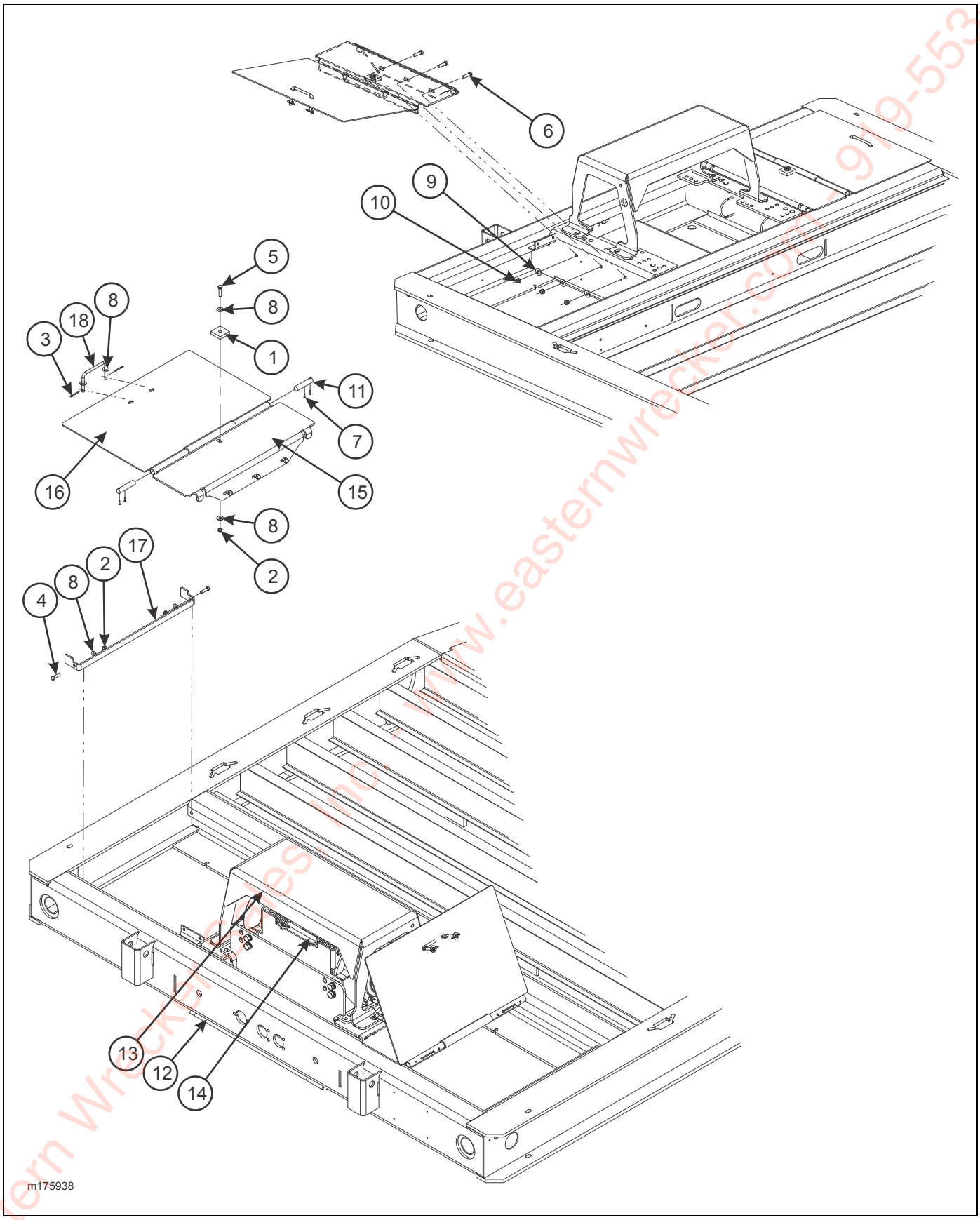

Figure 2-188: Upper Deck Toolbox Lid Installation (Option)

Eastern Wrecker Sales, Inc. - www.easternwrecker.com - 919-553-4038

UPPER DECK TOOLBOX LID INSTALLATION (NON-WEIGHT BEARING) (OPTION)

ITEM	PART NO.	DESCRIPTION	QTY.
	175938	UPPER DECK TOOLBOX LID INSTALLATION (NON-WEIGHT BEARING)	
1	1-250-010097	RUBBER PAD	2
2	1-512-010005-05	NUT, HEX LOCK 3/8-16 GRB	6
3	1-557-010362-40	PIN, COTTER 5/32 X 1-1/4	4
4	1-654-010051-06	SCREW, HEX HEAD CAP 3/8-16 X 1-1/4 GR5	4
5	1-654-010051-07	SCREW, HEX HEAD CAP 3/8-16 X 1-1/2 GR5	2
6	1-654-010053-05	SCREW, HEX HEAD CAP 7/16-14 X 1-1/2 GR5	6
7	1-654-010147-06	SCREW, RD HEAD SELF-TAP #6-20 X 3/4	8
8	1-861-010032-11	WASHER, FLAT 3/8W	12
9	1-861-010032-13	WASHER, FLAT 7/16W	6
10	101988	NUT, HEX LOCK 7/16-14 GRB	6
11	135181	BUSHING, NYLATRON TOOLBOX	4
12	-----	GOOSENECK WELDMENT	REF
13	171167	GUARD, WINCH 20K/30K WARN	REF
14	-----	WINCH ASSEMBLY, WARN 30K	REF
15	175940	SUPPORT WELDMENT, TOOLBOX LID	2
16	175942	LID WELDMENT, TOOLBOX	2
17	176069	CHAIN HOLDER, TOP OPEN TOOLBOX	2
18	3-360-010014	HANDLE, TOOL COMP	2

Eastern Wrecker Sales, Inc. - www.easternwrecker.com - 919-555-4038

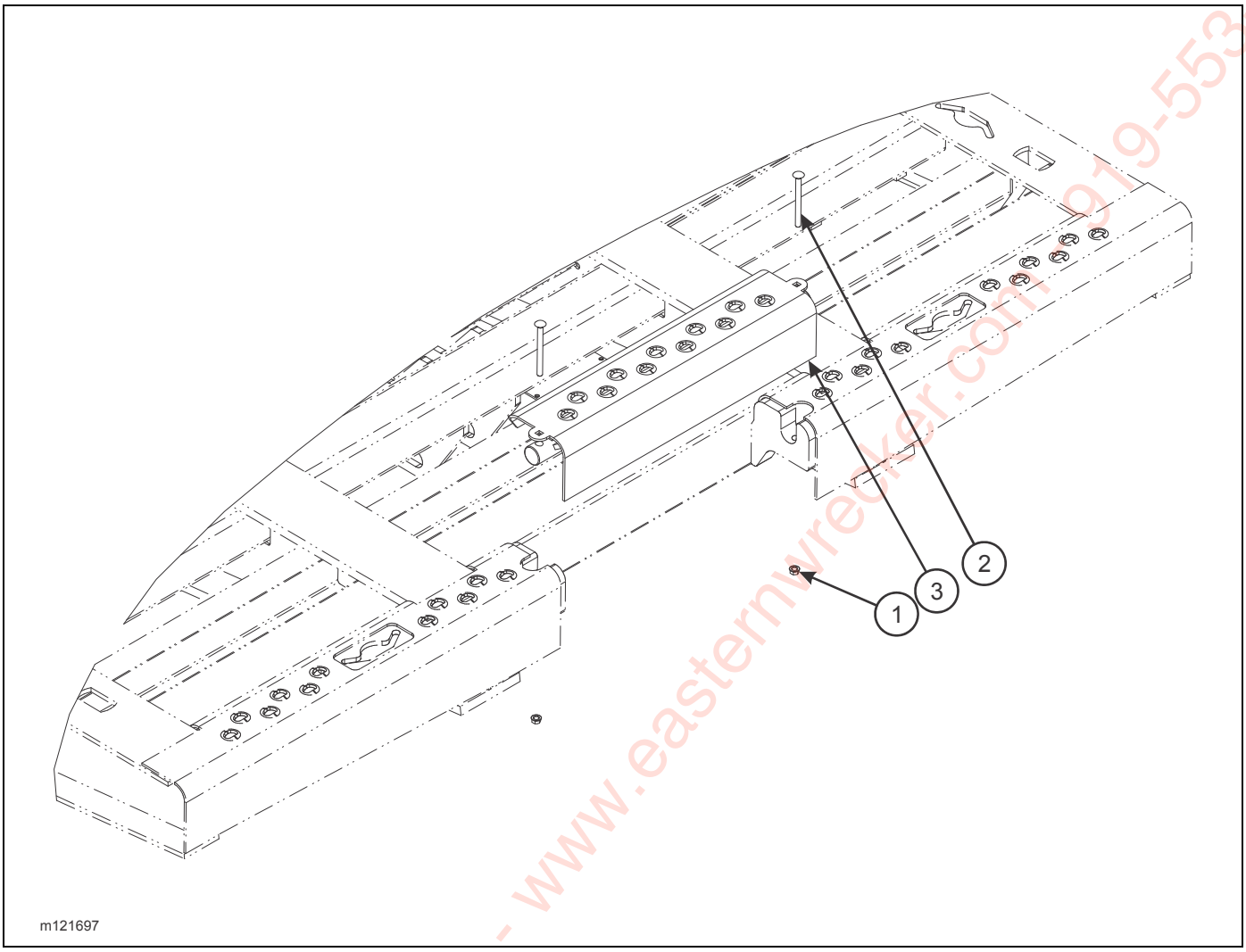

Figure 2-189: Center Rub Plate Cover Installation (Option)

CENTER RUB PLATE COVER INSTALLATION (OPTION)

ITEM	PART NO.	DESCRIPTION	QTY.
	121697	COVER INSTALLATION CENTER RUB PLATE	
1	1-510-010001	NUT, FLANGE HEAD SERR 3/8-16	2
2	112013	SCREW, RD HEAD SQ NECK 3/8-16 X 4-1/2	2
3	122938	COVER WELDMENT CENTER RUB PLATE	1

Eastern Wrecker Sales, Inc. - www.easternwrecker.com - 919-553-4038

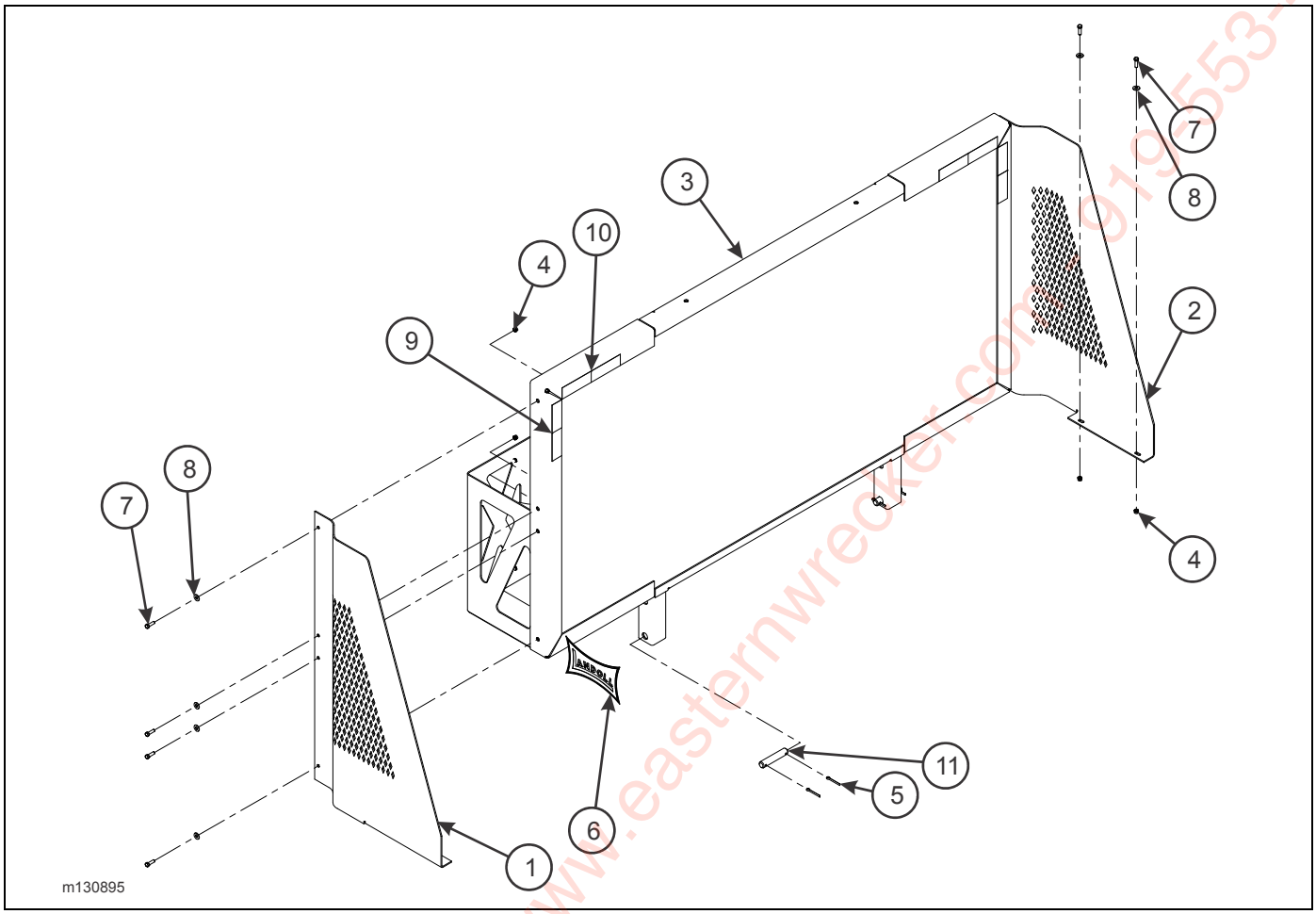

Figure 2-190: Special Bulkhead Installation (Option)

SPECIAL BULKHEAD INSTALLATION (OPTION)

ITEM	PART NO.	DESCRIPTION	QTY.
	130895	SPECIAL BULKHEAD INSTALLATION (OPTION)	
1	128137	EXTENSION ALUMINUM LH BULKHEAD	1
2	128138	EXTENSION ALUMINUM RH BULKHEAD	1
3	130896	BULKHEAD WELDMENT	1
4	1-512-010005-05	NUT, HEX LOCK 3/8-16 GRB	12
5	1-557-010362-63	PIN, COTTER 1/4 X 2	4
6	153755	DECAL, BOWTIE (BLACK/LT) REFLECTIVE	2
7	1-654-010051-06	SCREW, HEX HEAD CAP 3/8-16 X 1-1/4 GR5	12
8	1-861-010032-11	WASHER, FLAT 3/8W	12
9	3-573-010378	DECAL, 2 X 10 REFLEXITE WHITE	AR
10	3-573-010378	DECAL, 2 X 12 REFLEXITE WHITE	AR
11	6-557-010163	PIN, HITCH LEVELING LINK	2

Eastern Wrecker Sales, Inc. - www.easternwrecker.com - 919-553-4038

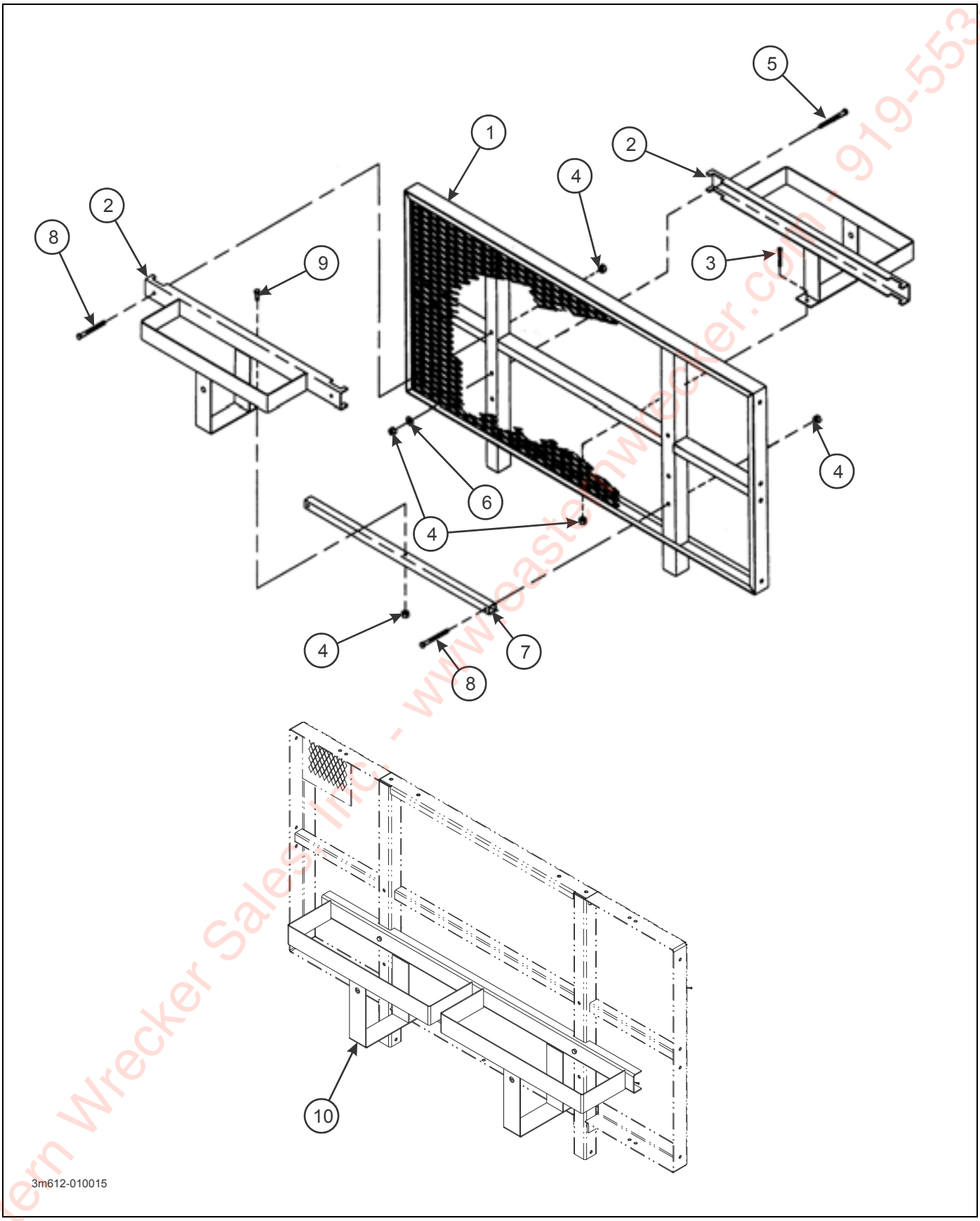

Figure 2-191: Spare Tire Carrier (Option)

Eastern Wrecker Sales, Inc. - www.easternwrecker.com - 919-553-4038

SPARE TIRE CARRIER (OPTION)

ITEM	PART NO.	DESCRIPTION	QTY.		
	3-612-010015-1	RACK INSTALLATION BHD, FRONT MOUNT	*		
	3-612-010015-2	RACK INSTALLATION BHD, REAR MOUNT		*	
	3-612-010015-3	RACK INSTALLATION BHD, FRONT MOUNT (2)			*
1	-----	BULKHEAD WELDMENT	REF	REF	REF
2	3-612-010016	RACK WELDMENT, BULKHEAD MOUNT	1	1	--
3	1-654-010055-01	SCREW, HEX HEAD CAP 1/2-13 X 1 GR5	1	--	2
4	1-512-010005-09	NUT, HEX LOCK 1/2-13 GRB	3	5	4
5	1-654-010055-15	SCREW, HEX HEAD CAP 1/2-13 X 5 GR5	2	--	2
6	1-861-010032-15	WASHER, FLAT 1/2W	2	--	2
7	3-829-010337	TUBE W/ TAB MOUNTED BULKHEAD SPARE RACK	--	1	--
8	1-654-010055-18	SCREW, HEX HEAD CAP 1/2-13 X 6-1/2 GR5	--	4	--
9	1-654-010055-09	SCREW, HEX HEAD CAP 1/2-13 X 3 GR5	--	1	--
10	3-612-010020	RACK WELDMENT, BULKHEAD MOUNT 210/R17.5	--	--	1

Eastern Wrecker Sales, Inc. - www.easternwrecker.com - 919-553-4038

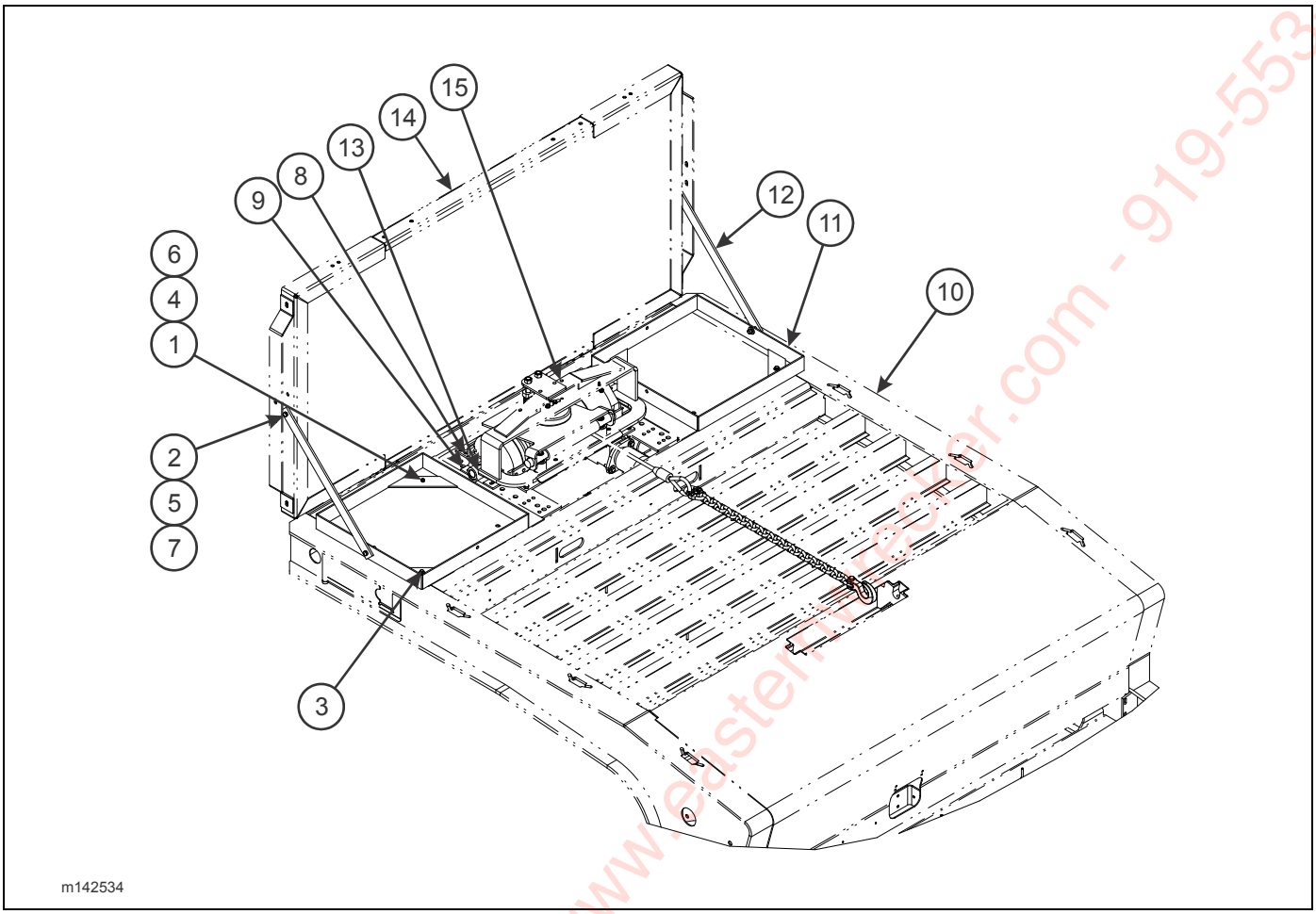

Figure 2-192: Chain Tray Assembly (Option)

CHAIN TRAY ASSEMBLY (OPTION)

ITEM	PART NO.	DESCRIPTION	QTY.
	142534	CHAIN TRAY ASSEMBLY (OPTION)	
1	1-512-010005-05	NUT, HEX LOCK 3/8-16 GRB	4
2	1-512-010005-09	NUT, HEX LOCK 1/2-13 GRB	4
3	1-654-010051-06	SCREW, HEX HEAD CAP 3/8-16 X 1-1/4 GR5	2
4	1-654-010051-13	SCREW, HEX HEAD CAP 3/8-16 X 3 GR5	2
5	1-654-010055-02	SCREW, HEX HEAD CAP 1/2-13 X 1-1/4 GR5	4
6	1-861-010032-11	WASHER, FLAT 3/8W	8
7	1-861-010032-15	WASHER, FLAT 1/2W	4
8	119621	ANCHOR, CABLE GUIDE WINCH	REF
9	119622	PIN, WINCH ROLLER PIVOT	REF
10	-----	GOOSENECK WELDMENT	REF
11	142532	CHAIN TRAY WELDMENT, UPPER DECK	2
12	160103	BRACE, BULKHEAD TO CHAIN TRAY	2
13	3-125-010464	BRACKET WELDMENT, WINCH ROLLER	REF
14	-----	BULKHEAD INSTALLATION (SEE PAGE 2-109)	REF
15	3-873-010140	WINCH INSTALLATION 20K UPPER DECK (SEE PAGE 2-159)	REF

Eastern Wrecker Sales Inc. www.easternwrecker.com - 919-553-4038

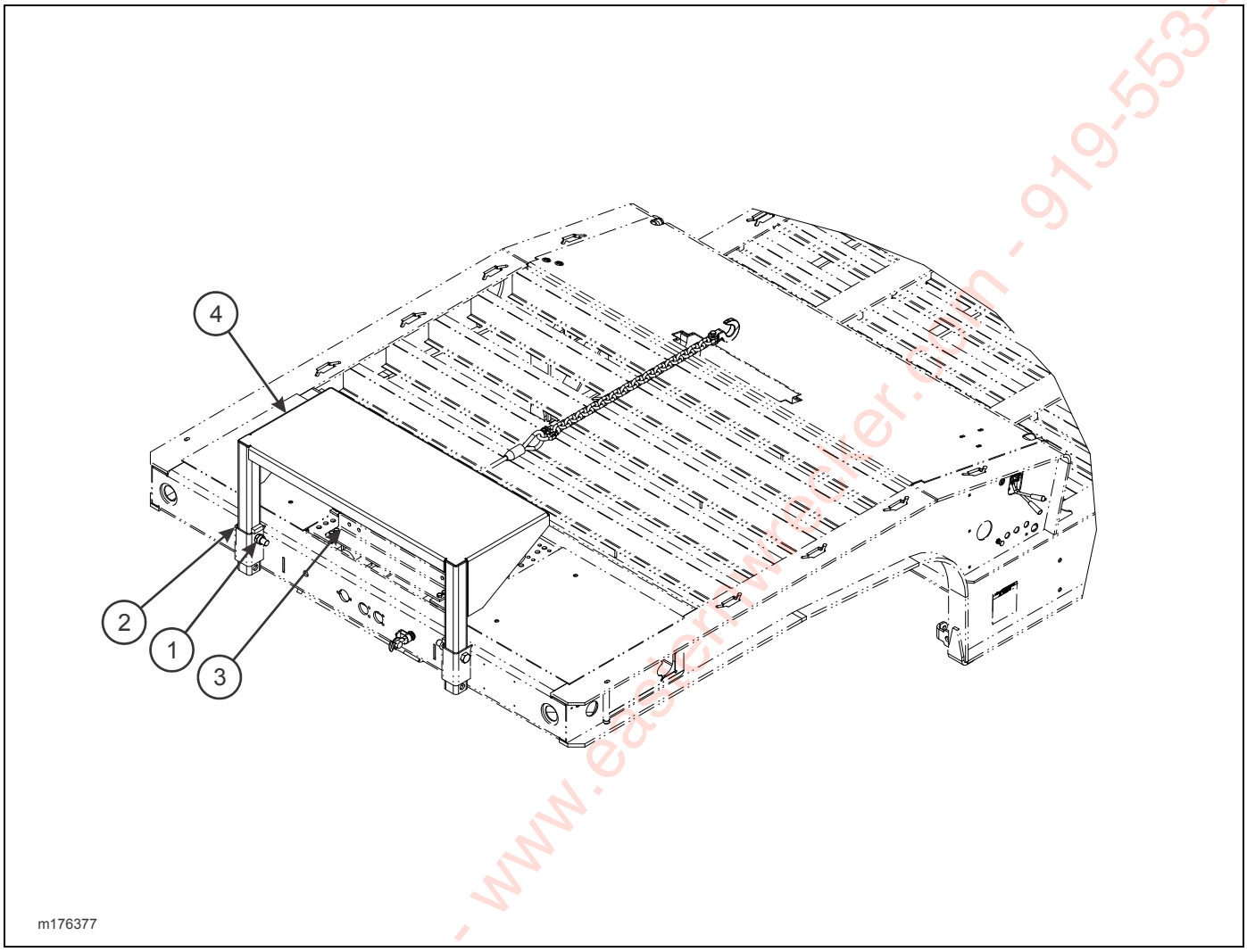

Figure 2-193: Spare Tire Mount Assembly

FRONT POCKET PLATFORM ASSEMBLY

ITEM	PART NO.	DESCRIPTION	QTY.
	176377	FRONT POCKET PLATFORM ASSEMBLY	
1	1-512-010005-19	NUT, HEX LOCK 1-8 GRB	1
2	1-654-010065-17	SCREW, HEX HEAD CAP 1-8 X 6 GR5	1
3	-----	WINCH INSTALLATION	REF
4	176378	SUPPORT WELDMENT, FRONT PLATFORM	1

Eastern Wrecker Sales, Inc. - www.easternwrecker.com - 919-553-4038

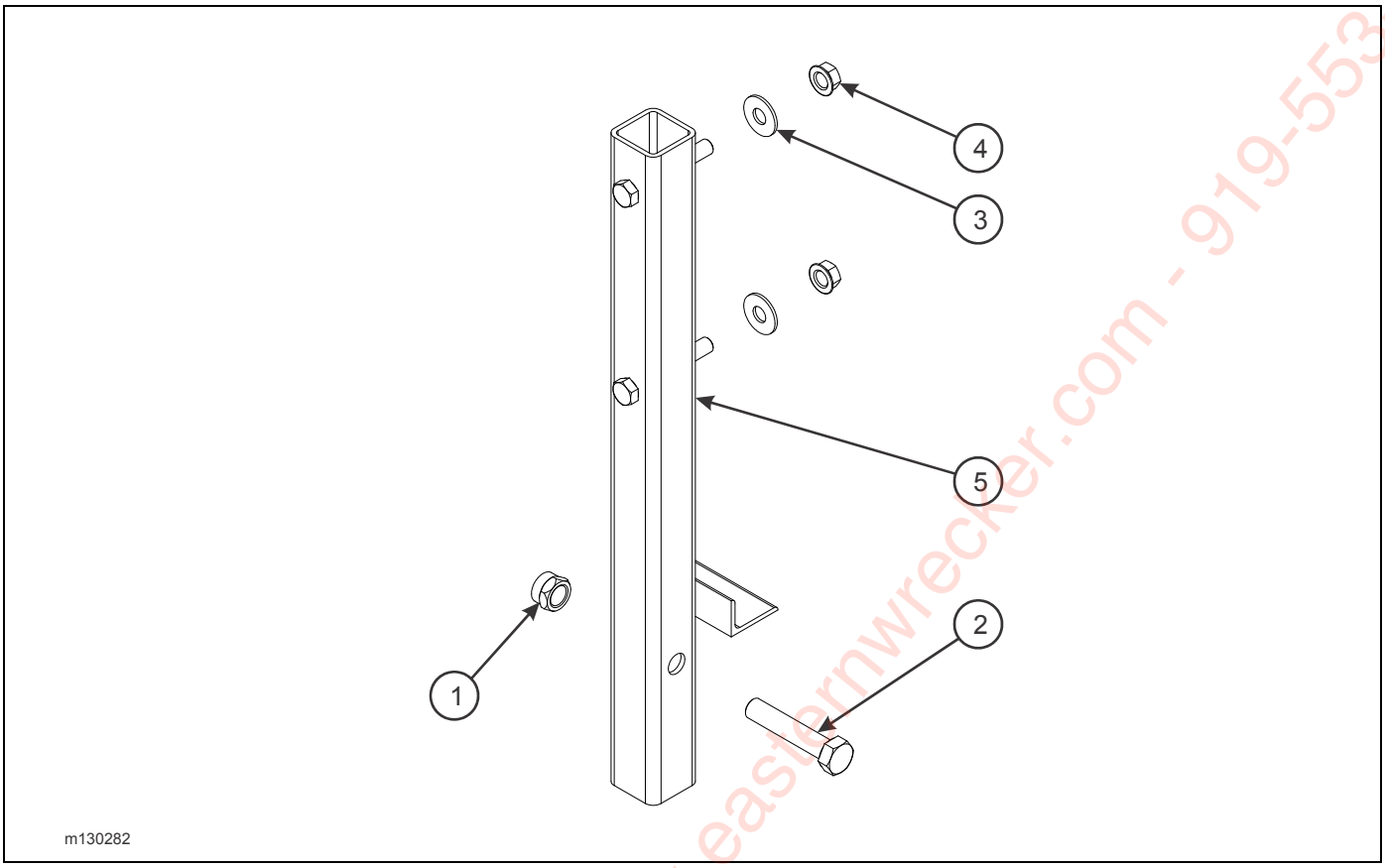

Figure 2-194: Spare Tire Mount Assembly

SPARE TIRE MOUNT ASSEMBLY

ITEM	PART NO.	DESCRIPTION	QTY.	
	130282	SPARE TIRE MOUNT ASSEMBLY	*	
	169641	SPARE TIRE MOUNT ASSEMBLY 255 TIRE		*
1	1-512-010005-19	NUT, HEX LOCK 1-8 GRB	1	1
2	1-654-010065-15	SCREW, HEX HEAD CAP 1-8 X 5 GR5	1	1
3	1-861-010032-21	WASHER, FLAT, 3/4W	2	2
4	103841	NUT, FLANGE PREVAILING TORQUE 3/4-10	2	2
5	130280	MOUNT WELDMENT, SPARE TIRE	1	--
	169639	MOUNT WELDMENT, SPARE TIRE 255	--	1

Eastern Wrecker Sales, Inc. - www.easternwrecker.com - 919-553-4038

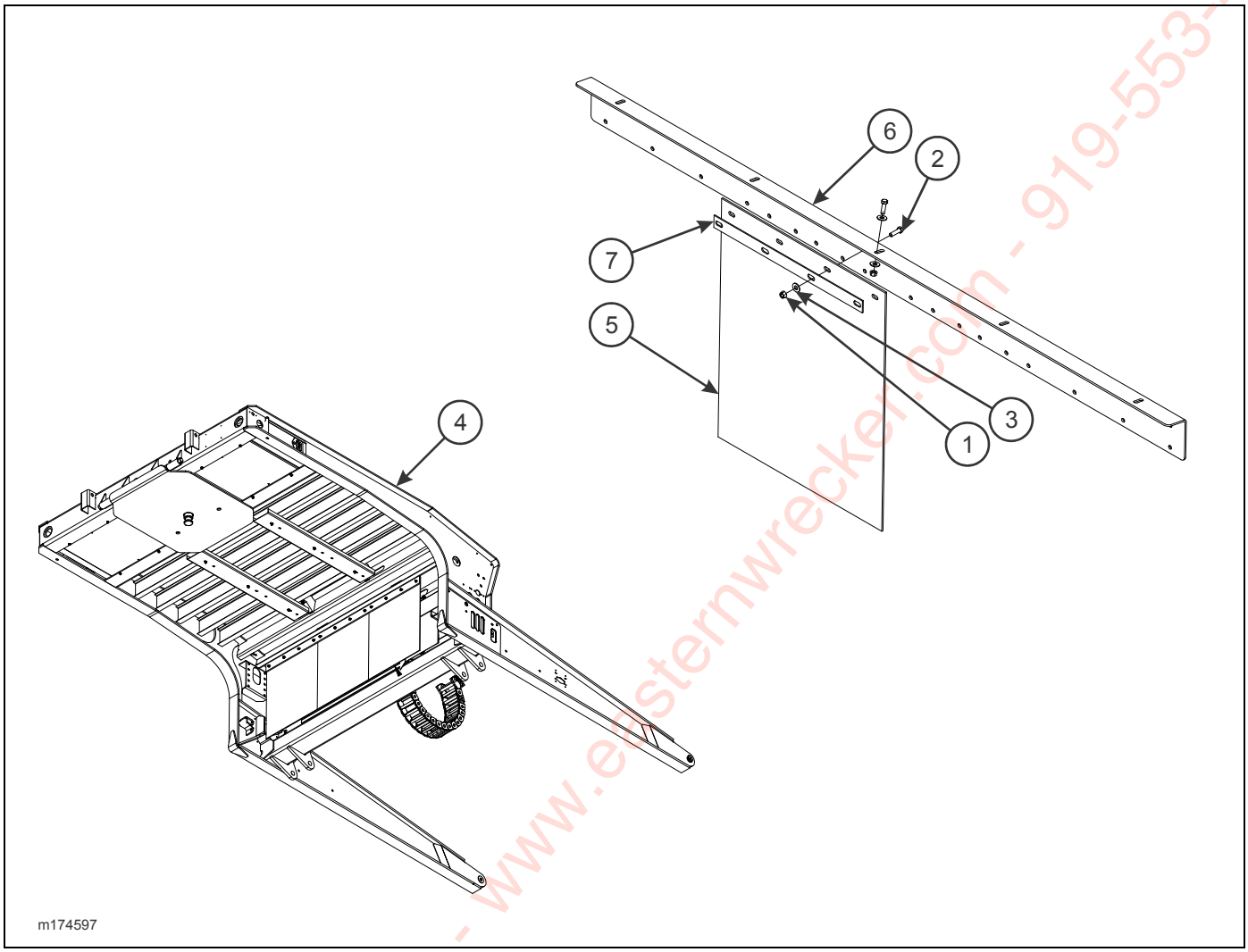

Figure 2-195: Mud Flap Installation

MUD FLAP INSTALLATION (LOCATED UNDER G/N)

ITEM	PART NO.	DESCRIPTION	QTY.		
	164434	MUD FLAP INSTALLATION (455-108)	*		
	174597	MUD FLAP INSTALLATION (400-102)		*	
	180539	MUD FLAP INSTALLATION (400-120)			*
1	1-510-010001	NUT, FLANGE LOCK 3/8-16	12	17	20
2	1-654-010051-06	SCREW, HEX HEAD CAP 3/8-16 X 1-1/4 GR5	12	17	20
3	1-861-010032-11	WASHER, FLAT 3/8W	12	22	25
4	-----	G/N WELDMENT	REF	REF	REF
5	131195	MUD FLAP, BLACK POLYMER 24 X 30	3	3	4
6	180538	BRACKET, MUDFLAP G/N UNDERSIDE	--	1	--
7	3-762-010017	CLAMP, MUD FLAP	3	3	4

Eastern Wrecker Sales, Inc. - www.easternwrecker.com - 919-553-4038

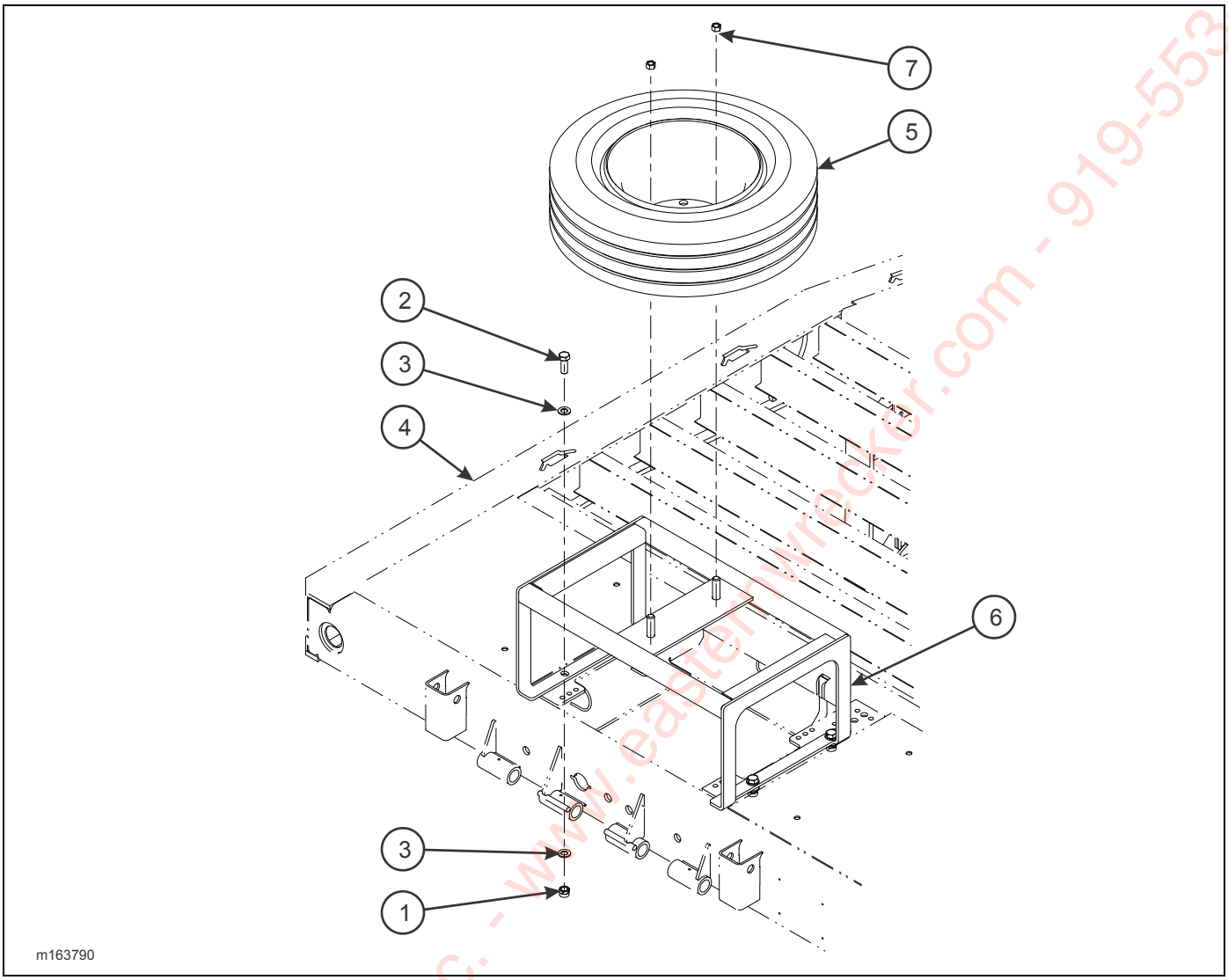

Figure 2-196: Horizontal Spare Tire Mount Assembly

HORIZONTAL SPARE TIRE MOUNT ASSEMBLY

ITEM	PART NO.	DESCRIPTION	QTY.
	163790	HORIZONTAL SPARE TIRE MOUNT ASSEMBLY	
1	1-512-010005-15	NUT, HEX LOCK 3/4-10 GRB	4
2	1-654-010061-05	SCREW, HEX HEAD CAP 3/4-10 X 2 GR5	4
3	1-861-010032-20	WASHER, FLAT, 3/4N	2
4	-----	GOOSENECK WELDMENT	REF
5	-----	TIRE ASSEMBLY	REF
6	163791	MOUNT WELDMENT, HORIZONTAL SPARE TIRE	1
7	179933	NUT, HEX M22 X 1.5	2

Eastern Wrecker Sales, Inc. - www.easternwrecker.com - 919-553-4038

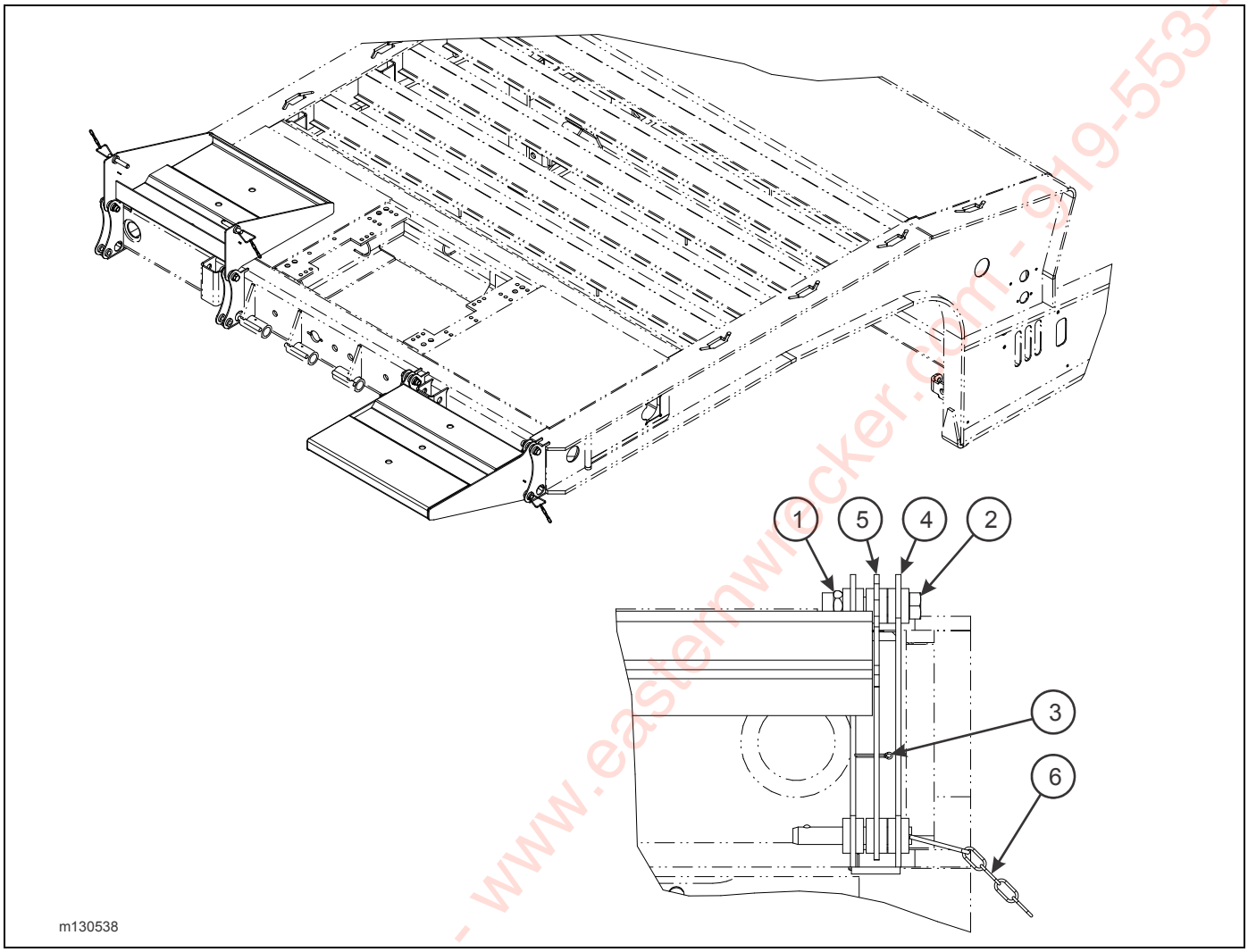

Figure 2-197: Front Flip Extension (Option)

FRONT FLIP EXTENSION (OPTION)

ITEM	PART NO.	DESCRIPTION	QTY.	
	130538	FRONT FLIP EXTENSION (OPTION)		
	174253	FRONT FLIP EXTENSION 108 (OPTION)		
1	1-512-010005-13	NUT, HEX LOCK 5/8-11 GRB	4	4
2	1-654-010059-11	SCREW, HEX HEAD CAP 5/8-11 X 3-1/2 GR5	4	4
3	101386	PIN, COTTER 1/8 X 1	4	4
4	130537	FRAME MOD., FRONT FLIP	1	1
5	130540	EXTENSION WELDMENT, FRONT FLIP	2	--
	174254	EXTENSION WELDMENT, FRONT FLIP 108	--	2
6	2-557-010426	PIN, DETENT 5/8 W/ CHAIN	2	2

Eastern Wrecker Sales, Inc. - www.easternwrecker.com - 919-553-4038

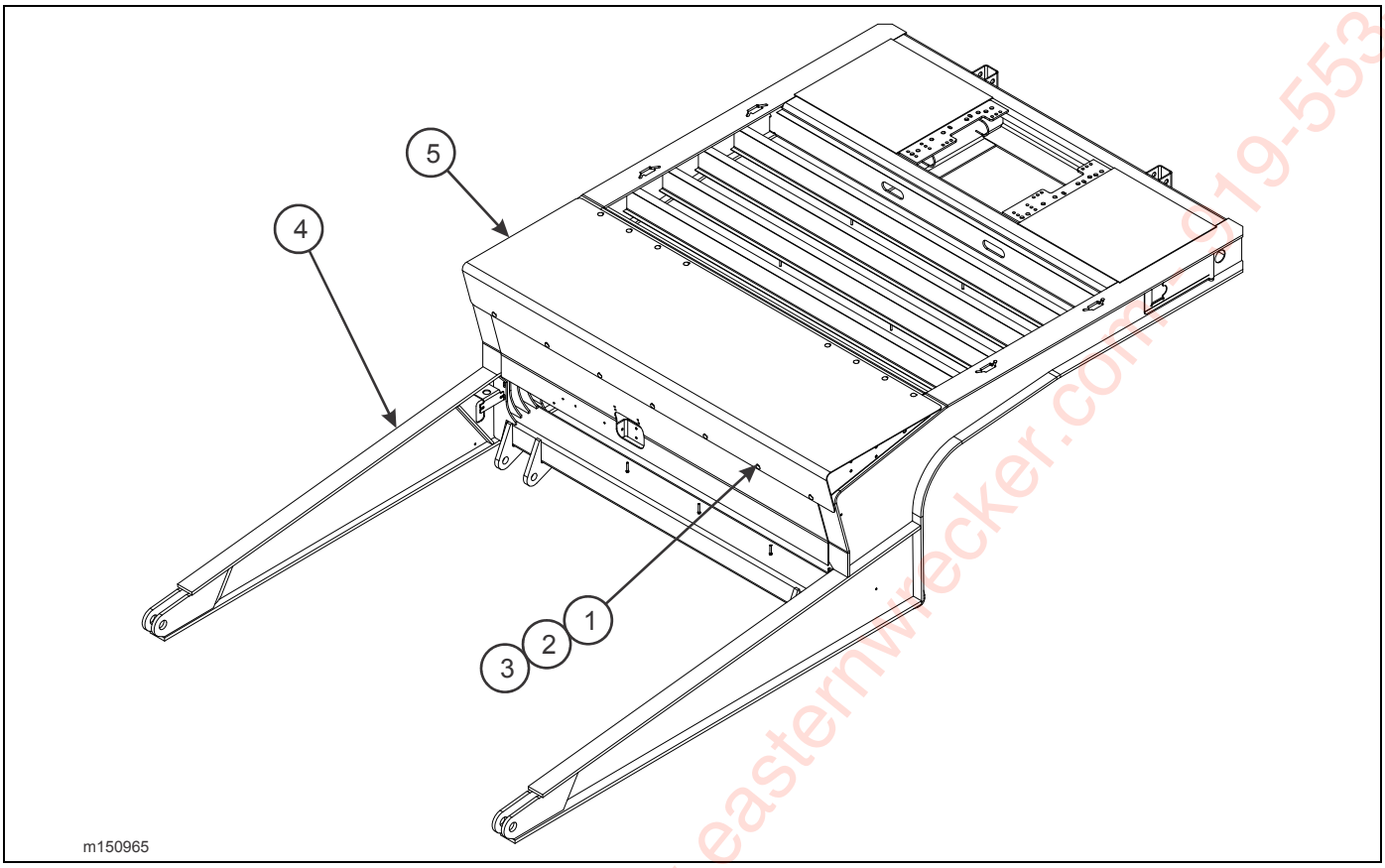

Figure 2-198: Slope Filler Deck Installation (Option)

SLOPE FILLER DECK INSTALLATION (OPTION)

ITEM	PART NO.	DESCRIPTION	QTY.
	150954	SLOPE FILLER DECK INSTALLATION	
	150965	GALVANIZED SLOPE FILLER DECK INSTALLATION	
1	1-510-010003-09	NUT, FLANGE HEAD SERRATED 1/2-13	15
2	1-654-010070-03	SCREW, RD HEAD SQ NECK 1/2-13 X 1-1/2	15
3	1-861-010032-15	WASHER, FLAT 1/2W	15
4	-----	GOOSENECK WELDMENT	REF
5	150950	SLOPE FILLER WELDMENT	1
	150962	SLOPE FILLER WELDMENT, GALVANIZED	1

Eastern Wrecker Sales, Inc. www.easternwrecker.com 519-553-4038

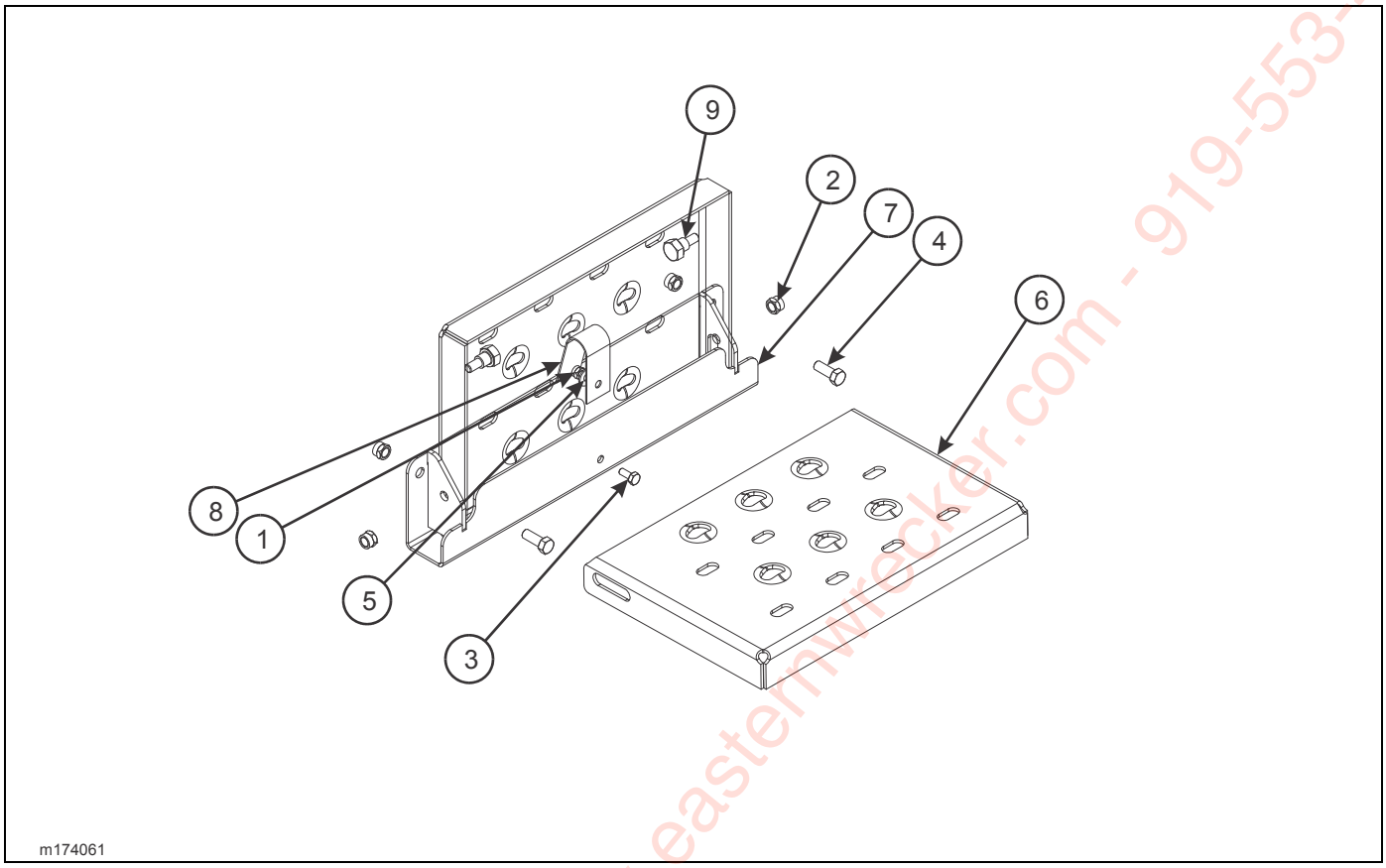

Figure 2-199: Folding Step Assembly (Option)

FOLDING STEP ASSEMBLY (DOUBLE DROP FRAME ONLY) (OPTION)

ITEM	PART NO.	DESCRIPTION	QTY.
	174061	FOLDING STEP ASSEMBLY	
1	1-512-010005-01	NUT, HEX LOCK 1/4-20 GRB	1
2	1-512-010005-05	NUT, HEX LOCK 3/8-16 GRB	4
3	1-654-010047-03	SCREW, HEX HEAD CAP 1/4-20 X 5/8 GR5	1
4	1-654-010051-05	SCREW, HEX HEAD CAP 3/8-16 X 1 GR5	2
5	1-861-010032-07	WASHER, FLAT 1/4W	1
6	174058	STEP, FOLD UP	1
7	174091	ANCHOR WELDMENT, FOLDING STEP	1
8	174092	SPRING, STAY FOLDING STEP	1
9	2-095-010017	SCREW, HEX HEAD CAP 1/2-13 X 1 GR5	2

Eastern Wrecker Sales, Inc. www.easternwrecker.com - 919-553-4038

NOTES:

Eastern Wrecker Sales, Inc. - www.easternwrecker.com - 919-553-4038

Chapter 3

Numerical Index

Numerics

0013007 2-297
0018127 2-229
0047008 . . . . . 2-222, 2-223
0047008/RK 2-223
0047008-01 2-223
0047008-02 2-223
0047008-03 2-223
0047008-10 2-223
0047008-11 2-223
0047008-12 2-223
0047008-13 2-223
005-074-00 2-89
005-096-00 2-91
005-098-00 . . . . . 2-89, 2-91
005-099-00 . . . . . 2-89, 2-91
006-114-00 . . . . . 2-89, 2-91
006-115-00 . . . . . 2-89, 2-91
010-052-00 . . . . . 2-89, 2-91
010700437 2-257
014-065-00 2-91
034-057-01 2-91
034-057-07 2-89
034-058-01 2-91
034-058-07 2-89
034-188-03 2-89
034-189-03 2-89
034-192-05 2-91
034-193-05 2-91
040-180-00 2-91
040-320-01 2-89
046-096-00 2-91
046-097-00 . . . . . 2-89, 2-91
056-018-00 . . . . . 2-89, 2-91
0600-250-01000 . . . . . 2-117, 2-121, 2-125
0600-375-01500 2-129
069-078-00 . . . . . 2-89, 2-91
071-122-00 2-91
100276 2-244
100279 2-244
10030 2-270
100348 . . 2-231, 2-233, 2-235, 2-237, 2-239, 2-241, 2-244
100401 2-93
100402 2-93
100600 . . . . . 2-5, 2-161, 2-164, 2-168, 2-171
1-007-010006 . . . . . 2-35, 2-37
1-007-010025 2-204
1-007-010058 . . . . . 2-231, 2-235, 2-239, 2-241
10078 . . . . . 2-174, 2-176
100823 2-9
100939 2-8
100941 2-48
100949 . . . . . 2-41, 2-67, 2-69, 2-71, 2-73, 2-103
101003 2-103
101386 2-337
101528 . . . . . 2-51, 2-59, 2-270
101848 2-77
101855 2-5

Eastern Wrecker Sales, Inc. - www.easternwrecker.com - 919-553-4038

101988 2-327
102-0031 . . 2-217, 2-220, 2-228, 2-233, 2-237, 2-255
102-0511 2-270
102-1089 2-222
102-1097 2-228
102-1112 2-229
102186 . . . . . 2-160, 2-171
102187 . . . . . 2-160, 2-164, 2-169
102188 . . . . . 2-160, 2-164, 2-168, 2-171
102361 2-86
102363 . . . . . 2-48, 2-56, 2-79, 2-81, 2-83, 2-86
102364 . . . . . 2-48, 2-56, 2-86
102732 . . . . . 2-79, 2-85
103055 . . . . . 2-5, 2-48, 2-56, 2-97
103056 . . . . . 2-5, 2-48, 2-56, 2-97
103082 . . . . . 2-48, 2-79, 2-313, 2-317, 2-319
103084 . . . . . 2-56, 2-81, 2-95
103-0924 2-297
103166 2-228
103738 . . . . . 2-69, 2-103
103805 . . . . . 2-89, 2-91
103816 . . . . . 2-57, 2-73
103817 . . . 2-8, 2-56, 2-71, 2-73, 2-95, 2-217, 2-220
103841 . . . . . 2-11, 2-13, 2-25, 2-334
103861 . . . . . 2-48, 2-67, 2-69, 2-77
104034 . . . . . 2-48, 2-56, 2-97, 2-99
104043 2-307
104044 2-307
104241 2-253
104242 2-253
104243 2-251
104253 . . . . . 2-117, 2-121, 2-125, 2-129
104369 2-17
1046 2-181
105-0105 . . . . . 2-264, 2-270
105274 2-276
105408 2-87
105479 . . . . . 2-19, 2-35, 2-37, 2-264, 2-270, 2-275
105480 . . . . . 2-19, 2-35, 2-37, 2-264, 2-270, 2-275
105481 . . . . . 2-19, 2-35, 2-37, 2-264, 2-270, 2-275
105482 . . . . . 2-19, 2-35, 2-37, 2-265, 2-270, 2-275
105822 . . . . . 2-5, 2-11, 2-13, 2-275
105902 2-275
105909 2-8
105953 2-188
105954 2-188
105967 2-188
106379 . . . . . 2-196, 2-199
106385 . . . . . 2-196, 2-199
106759 . . . . . 2-35, 2-37
106760 . . . . . 2-35, 2-37
106956 2-176
107-0975 2-325
107368 . . . . . 2-160, 2-164, 2-168, 2-179
107369 . . . . . 2-161, 2-164, 2-168, 2-179
107464 2-222
107498 2-35
107499 2-35
107500 2-35
107513 . . . . . 2-35, 2-37
107756 2-277
108295 2-265
108417 . . . . . 2-39, 2-303
108439 . . . . . 2-131, 2-137, 2-143, 2-153
108545 2-9
108601 . . . . . 2-9, 2-264, 2-270
108610 2-9
108801 . . . . 2-19, 2-133, 2-139, 2-145, 2-149, 2-155, 2-168, 2-185, 2-199
108802 2-19
108859 . . . . . 2-117, 2-121, 2-125
109161 2-259
109209 2-41
109214 2-48
109533 2-87
109711 2-259

Eastern Wrecker Sales, Inc. - www.easternwrecker.com - 919-553-4038

109712 2-259
109740 . . . . . 2-131, 2-137, 2-143, 2-149, 2-153
1-1/4ST ELL 2-35
110-0116 . . . . . 2-265, 2-270
110-0253 . . . . . 2-265, 2-270
110435 2-9
110448 2-177
110451 2-177
110452 . . . . . 2-174, 2-177
110578 2-265
110975 2-93
110976 2-93
111007 2-87
111008 2-87
111010 . . . . . 2-86, 2-87
111011 2-87
111012 2-87
111013 2-87
111014 2-87
111016 2-86
111017 2-86
111018 2-87
111019 2-87
111021 2-85
111022 2-87
111023 2-87
111091 . . . . . 2-197, 2-201
111092 . . . . . 2-197, 2-201
111093 . . . . . 2-197, 2-201
111094 . . . . . 2-197, 2-201
111095 . . . . . 2-197, 2-201
111096 . . . . . 2-197, 2-199, 2-201
11117 2-173
111276 2-299
11128 2-173
11129 2-173
11130 2-173
111301 2-25
111302 . . . . . 2-217, 2-220, 2-228, 2-255
11133 2-173
111351 2-196
111383 2-197
111384 2-197
111385 . . . . . 2-191, 2-197
111386 . . . . . 2-191, 2-197
111387 2-196
11142 2-173
11144 2-173
111641 2-185
111870 2-257
112013 2-328
112047 2-93
11240 2-174
112492 2-93
112641 2-201
112678 2-251
112679 2-251
11308 2-173
11309 2-176
11310 2-176
113268 . . . . . 2-51, 2-59, 2-99
113299 . . . . . 2-131, 2-137, 2-143, 2-153
113388 2-264
113536 2-93
113544 2-265
11368 2-173
113856 2-264
11398 2-177
11402 2-176
11407 2-176
11411 2-176
11419 2-176
11420 2-176
11421 2-176
114241 2-196
11425 2-176

Eastern Wrecker Sales, Inc. - www.easternwrecker.com - 919-553-4038

11426 2-177
11429 2-176
11430 2-176
11431 2-176
11434 2-176
11440 2-176
11441 2-176
11446 2-176
114581 2-301
114584 . . . . . 2-67, 2-69, 2-77
114585 . . . . . 2-67, 2-77
114586 . . . . . 2-71, 2-73, 2-75, 2-77, 2-103
114588 2-77
114589 2-77
114619 2-93
114674 2-11
114808 2-325
114814 . . . . . 2-8, 2-264, 2-270, 2-325
114815 . . . . . 2-264, 2-270, 2-325
114983 2-259
115703 2-89
115708 2-89
115713 2-91
115719 2-91
115738 . . . . . 2-48, 2-56, 2-75
115740 . . . . . 2-56, 2-75
115877 . . . . . 2-8, 2-265, 2-270, 2-325
115888 . . . . . 2-264, 2-270
11599 2-176
116326 . . . . . 2-264, 2-270
116328 . . . . . 2-264, 2-270
116330 . . . . . 2-264, 2-270
116378 2-171
116429 . . . . . 2-217, 2-220, 2-228, 2-255
116488 2-255
116623 2-325
116800 2-259
116822 2-9
116837 . . . . . 2-21, 2-185, 2-199
116856 2-9
116943 2-8
117304 . . . . . 2-67, 2-69, 2-71, 2-73, 2-103
117386 2-25
117400 2-32
117544 2-8
117556 2-9
117558 2-250
117559 2-250
117561 2-250
117562 2-9
117565 2-8
117873 2-264
11791 2-177
117997 2-303
1-181-010046-7 . . . . . 2-265, 2-270
118165 . . . . . 2-233, 2-237
118-2658-10 2-37
118-2659-9 . . . . 2-67, 2-69, 2-71, 2-73, 2-75, 2-103
118-2676-2 2-165
11837 2-173
118627 2-25
118629 2-295
118723 . . . . . 2-117, 2-121, 2-125
118800 2-9
118801 2-5
118805 2-5
118853 2-9
118889 2-9
118897 2-48
118929 . . . . . 2-121, 2-125
118930 . . . . . 2-121, 2-125
119084 2-193
119146 2-9
119206 . . . . . 2-264, 2-270
119445 2-264
119531 2-303

Eastern Wrecker Sales, Inc. - www.easternwrecker.com - 919-553-4038

119553 . . . . . 2-264, 2-271
119577 2-264
119580 . . . . . 2-48, 2-57
119621 . . . . . 2-161, 2-164, 2-168, 2-171, 2-332
119622 . . . . . 2-160, 2-164, 2-168, 2-171, 2-332
119623 2-171
119624 2-171
119949 2-250
120376 2-117
120377 2-117
120379 2-117
120380 2-117
120451 2-48
120457 . . . . . 2-117, 2-121, 2-125
120458 . . . . . 2-121, 2-125
120459 . . . . . 2-121, 2-125
120461 2-117
120491 2-117
120492 . . . . . 2-117, 2-121, 2-125, 2-127
120654 2-264
120659 2-265
120660 . . . . . 2-265, 2-270
120661 . . . . . 2-264, 2-270
12073 2-176
12075 2-173
120822 2-117
121031 2-21
121077 . . . . . 2-48, 2-56
121078 2-56
121124 . . . . . 2-228, 2-253
121125 2-8
121369 . . . . . 2-48, 2-57, 2-97
121377 . . . . . 2-305, 2-307
121402 . . . . . 2-231, 2-233, 2-241
12146 2-177
121498 . . . . . 2-48, 2-57, 2-95, 2-231
12-16 070120 . . . . . 2-35, 2-37
121686 . . . . . 2-57, 2-97, 2-99
121697 2-328
122333 . . . . . 2-185, 2-191
122334 2-191
122336 2-191
122337 2-191
122380 2-8
122458 2-191
122474 2-253
122536 . . . . . 2-48, 2-57, 2-97
122538 2-228
122540 . . . . . 2-231, 2-239
122557 2-41
122621 2-25
122812 2-228
122813 2-228
122913 . . . . . 2-117, 2-125
122916 . . . . . 2-117, 2-125
122938 2-328
123014 2-265
123150 . . . . . 2-11, 2-13
123166 . . . . . 2-264, 2-272, 2-273, 2-274
123210 2-159
123490 2-255
12412300-08 2-270
1-242-010178-2 2-257
1-242-010180-2 . . . . . 2-253, 2-255, 2-257
124549 2-176
124559 2-48
12465 2-176
124696 2-277
124971 . . . . . 2-127, 2-273
1-250-010097 2-327
125130 . . . . . 2-35, 2-37
125192 2-32
125194 2-32
125196 2-32
125399 2-325
125520 2-129

Eastern Wrecker Sales, Inc. - www.easternwrecker.com - 919-553-4038

125648 2-220
125799 2-111
125871 2-277
125892 . . . . . 2-161, 2-164, 2-168, 2-185
126537 . . . . . 2-57, 2-95, 2-241
126601 2-125
126602 2-125
126603 2-125
126605 2-125
126606 2-125
126609 . . . . . 2-121, 2-125, 2-127
126610 2-125
126629 . . . . 2-83, 2-133, 2-145, 2-155, 2-164, 2-323
126630 . . . . . 2-83, 2-315
126641 2-228
126672 . . . . . 2-83, 2-165, 2-315
126673 2-83
126674 2-83
126675 . . . . . 2-83, 2-323
126676 . . . . . 2-83, 2-165
126677 . . . . . 2-145, 2-155, 2-165, 2-323
126678 2-83
126679 . . . . . 2-83, 2-165
126680 2-83
126710 2-75
126711 2-75
126712 2-75
126713 2-75
126715 2-75
126716 . . . . . 2-41, 2-75
126718 2-75
126719 2-75
126736 2-228
126791 2-165
126794 2-57
126795 2-57
126796 2-57
126854 2-17
126862 . . . . . 2-83, 2-145, 2-155
126900 2-87
127422 . . . . . 2-11, 2-13
127579 . . . . . 2-48, 2-67
12767 2-177
127691 2-11
127708 2-87
127711 2-129
127712 2-129
127813 2-264
12783 2-176
127991 2-303
128020 2-129
128136 . . . . . 2-109, 2-305, 2-307
128137 . . . . . 2-109, 2-329
128138 . . . . . 2-109, 2-329
128152 2-109
128153 2-109
12817 2-173
128226 2-129
128227 2-129
128228 2-129
128229 2-129
128501 2-265
128539 2-129
128601 2-322
128672 2-57
128774 2-264
129069 . . . . . 2-253, 2-255
129084 2-253
129085 2-253
129088 2-255
129099 2-228
129264 . . . . . 2-264, 2-270
129287 2-265
1-295-010001 . . . . . 2-35, 2-37, 2-264, 2-270
1-295-010002 . . . . . 2-35, 2-37, 2-264, 2-270
1-297-010007-04 . 2-160, 2-168, 2-185, 2-196, 2-199

Eastern Wrecker Sales, Inc. - www.easternwrecker.com - 919-553-4038

1-297-010007-05 *2-133, 2-139, 2-145, 2-149, 2-155, 2-160, 2-168, 2-185, 2-196, 2-199*

1-297-010007-11 . . *2-79, 2-81, 2-310, 2-313, 2-317, 2-319*

1-297-010007-12 *2-41, 2-67, 2-69, 2-71, 2-73, 2-103*

1-297-010007-15 . . . . . *2-71, 2-73, 2-103*

1-297-010007-16 . . . . . *2-41, 2-43, 2-73*

1-297-010008-05 . *2-81, 2-161, 2-168, 2-193, 2-196*

1-297-010008-07 . . . . *2-53, 2-61, 2-79, 2-81, 2-101, 2-133, 2-139, 2-145, 2-149, 2-155, 2-160, 2-168, 2-185, 2-196, 2-199, 2-322*

1-297-010008-18 *2-67, 2-69, 2-71, 2-73, 2-81, 2-103*

1-297-010008-23 . . . . . *2-67, 2-69*

1-297-010008-24 . . . . *2-67, 2-69, 2-71, 2-73, 2-103*

1-297-010008-26 . . . . . *2-67, 2-71, 2-73, 2-103*

1-297-010009-02 . . . . . *2-313, 2-315, 2-317*

1-297-010010-01 *2-53, 2-61, 2-79, 2-81, 2-101, 2-149*

1-297-010010-03 . . . . . *2-81*

1-297-010010-04 . . *2-79, 2-81, 2-313, 2-317, 2-319, 2-322*

1-297-010011-02 . . . . . *2-168, 2-185, 2-199*

1-297-010013-12 . . . . . *2-43*

1-297-010013-16 . . . . . *2-71, 2-103*

1-297-010014-02 . . . . . *2-319, 2-322*

1-297-010015-02 . . . . . *2-81, 2-161, 2-193*

1-297-010015-03 . . . . . *2-81, 2-168, 2-197*

1-297-010017-03 *2-67, 2-69, 2-71, 2-73, 2-75, 2-103*

1-297-010018-03 . *2-41, 2-103, 2-133, 2-139, 2-145, 2-149, 2-155, 2-168, 2-185, 2-199*

1-297-010018-04 *2-67, 2-71, 2-75, 2-79, 2-103, 2-310*

1-297-010019-05 *2-133, 2-139, 2-145, 2-149, 2-155, 2-161, 2-165, 2-168, 2-185, 2-197, 2-199*

1-297-010020-02 *2-161, 2-164, 2-168, 2-185, 2-196, 2-199*

1-297-010021-05 . . . . . *2-41*

1-297-010022-02 *2-161, 2-164, 2-168, 2-185, 2-196, 2-199, 2-310, 2-322, 2-323*

1-297-010022-03 . . . . . *2-41*

1-297-010022-04 . . . . . *2-41*

1-297-010031-02 *2-160, 2-164, 2-168, 2-196, 2-199*

1-297-010032-03 . . . . . *2-160, 2-168, 2-196, 2-199*

1-297-010033-03 . . . . . *2-41*

1-297-010034-01 . . . . . *2-264*

1-298-010001-1 *2-8, 2-9, 2-211, 2-213, 2-215, 2-222, 2-320*

129893 . . . . . *2-297*

129894 . . . . . *2-297*

13005 . . . . . *2-173*

130116 . . *2-111, 2-285, 2-287, 2-288, 2-289, 2-290, 2-291, 2-305, 2-307*

13028 . . . . . *2-174, 2-177*

130280 . . . . . *2-334*

130282 . . . . . *2-334*

130537 . . . . . *2-337*

130538 . . . . . *2-337*

130540 . . . . . *2-337*

130543 . . . . . *2-121*

130544 . . . . . *2-121*

130545 . . . . . *2-121*

130546 . . . . . *2-121*

130547 . . . . . *2-121*

130548 . . . . . *2-121*

130549 . . . . . *2-121*

130552 . . . . . *2-204*

130553 . . . . . *2-117, 2-121*

130556 . . . . . *2-48*

130583 . . . . . *2-121*

130584 . . . . . *2-121*

130585 . . . . . *2-121, 2-125*

130586 . . . . . *2-121, 2-125*

130662 . . . . . *2-215, 2-307, 2-320*

130794 . . . . . *2-49*

130851 . . . . . *2-48, 2-57, 2-239*

130883 . . . . . *2-278*

130895 . . . . . *2-109, 2-329*

130896 . . . . . *2-109, 2-329*

131108 . . . . . *2-121*

131131 . . . . . *2-121*

131195 . . . . . *2-335*

Eastern Wrecker Sales, Inc. - www.easternwrecker.com - 919-553-4038

131196 2-8
131232 2-121
131233 2-121
1-316-010013 2-264
131726 2-228
131738 2-117
131739 2-117
131740 2-117
131741 2-117
131784 2-117
131895 2-320
132103 2-193
132104 2-193
132106 . . . . . 2-202, 2-203
1-323-010008 . . . . . 2-322, 2-323
132773 2-149
132833 . . . . . 2-143, 2-149, 2-153, 2-185
132834 2-185
133768 2-57
133777 2-57
133794 2-89
133796 2-56
133797 2-56
133798 2-250
133799 2-250
133938 2-193
133941 2-193
13424 . . . . . 2-174, 2-177
1-343-010001 2-285
1-343-010006 . . . . . 2-111, 2-287
1-343-010007 . . . . . 2-111, 2-129, 2-299, 2-307, 2-310
134608 2-109
134616 2-109
134656 2-278
134657 . . . . . 2-133, 2-137, 2-139, 2-145, 2-149, 2-155, 2-185
13468 2-173
134857 . . . . . 2-271, 2-272
135181 . . . . . 2-8, 2-327
135189 2-255
135778 2-8
135779 2-8
136202 2-89
136257 . . . . . 2-48, 2-56
136352 2-8
136377 2-21
136378 2-21
136396 . . . . . 2-125, 2-127
136399 2-129
136565 2-277
136578 . . . . . 2-125, 2-272
136580 2-273
136581 2-273
136582 2-273
13680 2-174
136828 . . . . . 2-125, 2-127
136829 2-127
136848 2-109
136849 2-109
137028 2-193
137070 2-9
137108 2-93
137421 2-187
137422 2-187
137424 2-201
137425 2-201
137426 2-201
137427 2-201
137428 2-201
137461 2-91
137485 2-91
137559 2-303
137569 2-187
137570 2-187
137634 2-204
137635 2-204

Eastern Wrecker Sales, Inc. - www.easternwrecker.com - 919-553-4038

137641 2-187
137794 2-17
137879 2-188
137880 . . . . . 2-187, 2-188
137881 2-188
137882 2-187
137883 2-187
137884 2-187
137885 2-187
137886 2-187
137887 2-187
137888 2-187
137892 2-129
137893 2-129
137894 2-129
137943 2-273
137963 2-8
137974 2-259
137987 . . 2-111, 2-137, 2-149, 2-153, 2-285, 2-287, 2-289, 2-290, 2-291, 2-305, 2-307
137993 2-187
137994 2-187
138155 . . . . . 2-51, 2-59, 2-231, 2-241
138179 . . . . . 2-217, 2-220, 2-229, 2-255
138197 2-89
138200 2-56
1-382-010035-06 . . . . . 2-143, 2-149, 2-153, 2-185
138203 2-91
138205 . . . . . 2-48, 2-56
138209 2-271
13839 2-173
1-384-010038024 . . . . . 2-71, 2-73
1-384-010038038 . . . . . 2-71, 2-73
1-384-010038056 2-67
1-384-010038060 . . . . . 2-69, 2-71, 2-73
1-384-010038076 . . . . . 2-71, 2-73
1-384-010038084 . . . . . 2-71, 2-73, 2-103
1-384-010038120 2-103
1-384-010038-2 2-103
13894 2-201
138955 2-91
138958 2-91
138959 2-91
139132 2-297
139133 2-297
139254 . . . . . 2-149, 2-204
139256 2-250
139287 . . . . . 2-89, 2-91
139383 2-91
1-394-010001 . . 2-67, 2-69, 2-71, 2-73, 2-75, 2-235, 2-237, 2-239
1-394-010002 . . . . . 2-231, 2-233, 2-241
139478 2-177
139479 2-176
139519 2-21
139520 . . . . . 2-5, 2-8, 2-11, 2-13
139525 . . . . . 2-133, 2-139, 2-145, 2-155
139529 2-63
139552 . . . . . 2-168, 2-185, 2-199
139553 2-265
1-397-010262028 2-241
1-397-010262100 2-241
1-397-010262-5 . . . . . 2-231, 2-239, 2-241
1-397-010301018 2-277
1-397-010301024 2-25
1-397-010301039 2-25
1-397-010301048 2-25
1-397-010301064 . . . . . 2-15, 2-17
1-397-010301070 2-17
1-397-010301074 2-17
1-397-010301100 . . . . . 2-35, 2-37
1-397-010301160 . . . . . 2-15, 2-17
1-397-010301164 2-17
1-397-010301170 . . . . . 2-17, 2-159, 2-168, 2-171
1-397-010301194 2-159
1-397-010301208 . . . . . 2-196, 2-199

Eastern Wrecker Sales, Inc. www.easternwrecker.com - 919-553-4038

1-397-010302018 ..... *2-217, 2-220, 2-228, 2-255*
1-397-010302042 ..... *2-17, 2-276*
1-397-010302050 ..... *2-17*
1-397-010302084 ..... *2-15, 2-17*
1-397-010302087 ..... *2-17*
1-397-010302172 *2-133, 2-145, 2-159, 2-168, 2-171*
1-397-010302192 ..... *2-160*
1-397-010302220 *2-133, 2-139, 2-145, 2-149, 2-155, 2-185*
1-397-010304018 ..... *2-265, 2-270*
1-397-010304025 ..... *2-270*
1-397-010304060 ..... *2-265, 2-270*
1-397-010305190 ..... *2-15, 2-17*
1-397-010305216 ..... *2-17*
1-397-010305616 ..... *2-15*
1-397-010306028 ..... *2-217, 2-220, 2-228, 2-255*
1-397-010307296 ..... *2-228*
1-397-010307356 ..... *2-228*
1-397-010312032 ..... *2-265*
1-397-010313021 ..... *2-37*
139927 ..... *2-17, 2-164, 2-171*
139928 ..... *2-133, 2-145, 2-155, 2-164, 2-171*
139929 ..... *2-164*
139930 ..... *2-56, 2-83, 2-315*
139932 ..... *2-57, 2-75*
139934 ..... *2-25*
139935 ..... *2-25*
139936 ..... *2-17*
139939 ..... *2-17*
139944 ..... *2-41, 2-75*
140032 ..... *2-57*
140083 ..... *2-39*
140087 ..... *2-5*
140319 ..... *2-33*
140328 ..... *2-305, 2-307*
140330 ..... *2-307*
140802 ..... *2-168*
140815 ..... *2-301*
140816 ..... *2-301*
140817 ..... *2-301*
140829 ..... *2-49*
140851 ..... *2-9*
140893 ..... *2-21*
141456 ..... *2-201*
141547 ..... *2-201*
141607 ..... *2-11, 2-13, 2-41, 2-43, 2-317, 2-319*
141609 ..... *2-9*
141618 ..... *2-159*
141628 ..... *2-129*
141629 ..... *2-129*
141636 ..... *2-129*
141637 ..... *2-129*
141638 ..... *2-228*
141639 ..... *2-228*
141694 ..... *2-301*
141695 ..... *2-301*
141696 ..... *2-301*
141698 ..... *2-301*
141699 ..... *2-301*
141700 ..... *2-301*
141701 ..... *2-301*
141702 ..... *2-301*
141703 ..... *2-301*
141705 ..... *2-301*
141706 ..... *2-301*
141707 ..... *2-301*
141708 ..... *2-87*
141709 ..... *2-87*
142050 ..... *2-25*
142053 ..... *2-25*
142068 ..... *2-15, 2-17*
142270 ..... *2-265*
142441 ..... *2-51, 2-59, 2-99*
142442 ..... *2-51, 2-59*
142443 ..... *2-51, 2-59*
142444 ..... *2-59, 2-99*

Eastern Wrecker Sales, Inc. - www.easternwrecker.com - 919-553-4038

142445 2-59
142446 . . . . . 2-51, 2-59
142447 . . . . . 2-51, 2-59
142448 2-51
142450 . . . . . 2-51, 2-59
142451 . . . . . 2-51, 2-59
142454 2-59
142455 2-59
142483 2-23
142484 2-23
142485 2-23
142486 2-23
142511 2-89
142512 2-56
142513 2-56
142526 2-307
142529 . . . . . 2-305, 2-307
142530 . . . . . 2-305, 2-307
142532 2-332
142534 2-332
142545 . . . . . 2-51, 2-59, 2-99
142549 2-93
142550 2-93
142551 2-93
142553 . . . . . 2-5, 2-51
142565 . . . . . 2-57, 2-97
142895 2-313
143100 . . . . 2-39, 2-113, 2-298, 2-313, 2-317, 2-319
143101 . . . 2-39, 2-113, 2-281, 2-283, 2-298, 2-313, 2-317, 2-319
143102 . . . . 2-39, 2-279, 2-281, 2-283, 2-293, 2-298
143103 . . . . 2-39, 2-279, 2-281, 2-283, 2-298, 2-303
143104 . . . . . 2-39, 2-113, 2-115, 2-291, 2-303
143105 2-39
143106 2-39
143107 2-39
143108 2-39
143109 . . . . . 2-39, 2-113
143110 . . . . . 2-39, 2-113
143113 . . . . . 2-39, 2-113, 2-115, 2-303
143114 . . . . . 2-39, 2-113, 2-115, 2-303
143115 . . . . . 2-39, 2-303
143116 . . . . . 2-39, 2-303
143117 . . . . . 2-39, 2-303
143118 . . . . . 2-39, 2-303
143119 2-39
143120 2-39
143122 2-39
143141 2-23
143166 . . . . . 2-39, 2-283, 2-303
143167 . . . . . 2-113, 2-115
143182 . . . . . 2-59, 2-99
143214 . . . . . 2-11, 2-15
143246 . . . . . 2-161, 2-164, 2-168
143688 . . . . . 2-5, 2-59
144608 . . . . . 2-115, 2-291, 2-303
144613 2-51
144614 . . . . . 2-51, 2-59, 2-99
144629 2-185
144661 2-26
144662 2-25
144663 2-27
144664 2-25
144665 2-28
144666 2-25
144667 2-29
144668 2-25
144669 2-30
144670 2-25
144671 2-31
144672 2-25
144673 . . . . . 2-11, 2-13, 2-25
144674 2-25
144675 . . . . . 2-11, 2-25
144676 . . . . . 2-11, 2-13, 2-25
144677 . . . . . 2-11, 2-13, 2-25

Eastern Wrecker Sales, Inc. - www.easternwrecker.com - 919-563-4038

144736 2-271
144979 . . . . . 2-89, 2-91
145416 2-59
145515 2-75
145532 . . . . . 2-57, 2-97
145537 2-56
145538 2-279
145588 . . . . . 2-209, 2-215
145589 2-215
145598 2-311
145599 2-311
145677 2-63
145816 2-290
146834 2-26
146836 2-26
146837 2-27
146839 2-27
146840 2-28
146842 2-28
146843 2-29
146845 2-29
146846 2-30
146848 2-30
146849 2-31
146851 2-31
146854 . . . . . 2-26, 2-27, 2-28, 2-29, 2-30, 2-31
146897 2-281
146929 . . . 2-113, 2-115, 2-281, 2-283, 2-305, 2-307
146998 2-185
147193 2-185
147464 2-77
147468 2-274
147469 2-274
147471 2-274
148240 . . . . . 2-21, 2-23
148241 . . 2-11, 2-13, 2-15, 2-17, 2-21, 2-221, 2-276
148267 2-271
148268 2-271
148284 2-159
148413 2-63
148416 2-63
148417 2-63
148576 2-297
148585 2-281
148703 2-159
149007 2-221
149011 2-220
149012 2-220
149026 2-57
149030 2-23
149051 2-41
149526 2-23
149527 2-23
149528 2-23
149529 2-23
149530 2-23
149543 2-313
150072 2-303
150074 2-303
150076 2-8
150093 . . . . 2-39, 2-113, 2-288, 2-313, 2-317, 2-319
150111 . . . . . 2-279, 2-291, 2-309
150114 2-291
150115 2-291
150116 . . . . . 2-279, 2-297, 2-309
150117 . . . . 2-39, 2-111, 2-113, 2-137, 2-139, 2-149, 2-153, 2-155, 2-285, 2-287, 2-288, 2-289, 2-290, 2-291, 2-305
150151 . . . . . 2-57, 2-71
150182 . . . . . 2-39, 2-56, 2-59, 2-61
150188 2-129
150329 2-303
150330 2-303
150950 2-338
150954 2-338
150962 2-338

Eastern Wrecker Sales, Inc. - www.easternwrecker.com - 919-553-4038

150965 2-338

1-510-010001 2-8, 2-11, 2-13, 2-48, 2-56, 2-67, 2-69, 2-71, 2-73, 2-75, 2-95, 2-97, 2-103, 2-160, 2-171, 2-217, 2-220, 2-228, 2-231, 2-233, 2-235, 2-237, 2-239, 2-241, 2-253, 2-270, 2-295, 2-328, 2-335

1-510-010003-09 . . . . . 2-25, 2-325, 2-338

1-510-010004-03 . . . . . 2-9, 2-270

1-511-010001-07 2-193

1-511-010001-14 . . . . . 2-56, 2-97

1-512-010002-09 2-131, 2-137, 2-143, 2-149, 2-153

1-512-010003-02 . . . . . 2-161, 2-164, 2-196

1-512-010003-06 2-295

1-512-010004-03 2-161, 2-164, 2-168, 2-265, 2-270

1-512-010004-05 2-308

1-512-010005-01 . 2-8, 2-11, 2-13, 2-59, 2-79, 2-81, 2-83, 2-85, 2-99, 2-101, 2-270, 2-279, 2-281, 2-283, 2-290, 2-297, 2-299, 2-301, 2-305, 2-307, 2-309, 2-313, 2-317, 2-319, 2-339

1-512-010005-03 . . . 2-8, 2-19, 2-111, 2-137, 2-149, 2-153, 2-217, 2-220, 2-228, 2-253, 2-285, 2-287, 2-289, 2-290, 2-291, 2-301, 2-305, 2-307

1-512-010005-05 2-35, 2-37, 2-67, 2-69, 2-71, 2-73, 2-75, 2-103, 2-109, 2-160, 2-168, 2-171, 2-250, 2-264, 2-270, 2-276, 2-299, 2-322, 2-323, 2-327, 2-329, 2-332, 2-339

1-512-010005-09 2-8, 2-35, 2-56, 2-97, 2-109, 2-111, 2-115, 2-161, 2-164, 2-168, 2-171, 2-179, 2-185, 2-193, 2-196, 2-199, 2-205, 2-209, 2-211, 2-213, 2-215, 2-224, 2-225, 2-231, 2-233, 2-235, 2-237, 2-239, 2-241, 2-264, 2-270, 2-272, 2-274, 2-305, 2-307, 2-311, 2-320, 2-331, 2-332

1-512-010005-13 . . . 2-37, 2-56, 2-97, 2-160, 2-164, 2-168, 2-171, 2-191, 2-197, 2-250, 2-251, 2-253, 2-337

1-512-010005-15 2-117, 2-121, 2-185, 2-207, 2-336

1-512-010005-19 . . . . . 2-273, 2-333, 2-334

1-512-010007-03 . . . 2-39, 2-81, 2-83, 2-111, 2-321

1-512-010007-05 2-11, 2-13, 2-48, 2-56, 2-97, 2-161, 2-164, 2-168, 2-179, 2-197

1-512-010007-09 2-87

1-512-010007-11 2-193

1-512-010007-12 . . . . . 2-161, 2-164, 2-168

151817 . . . . . 2-131, 2-143

151818 . . . . . 2-131, 2-133, 2-213

151819 . . . . . 2-131, 2-133, 2-135

151823 2-23

152660 . . . . . 2-48, 2-51, 2-53

152673 2-129

1-533-010001 . . . . . 2-117, 2-121, 2-125

153420 2-325

153721 2-5

153744 2-5

153748 2-5

153749 2-5

153750 2-5

153751 . . . . . 2-5, 2-271

153752 2-5

153753 2-5

153754 . . . . . 2-5, 2-109

153755 . . . . . 2-5, 2-109, 2-329

153769 2-5

153795 2-271

153798 2-5

154166 2-176

154234 . . . . . 2-131, 2-137, 2-153

154434 2-25

154653 2-63

155107 2-292

155273 2-111

155274 2-111

155277 2-5

155278 2-5

155410 . . . . . 2-143, 2-145, 2-149, 2-151

155411 . . . . . 2-143, 2-145, 2-213

1-557-010014 2-109

1-557-010362-40 2-327

1-557-010362-54 . . . . . 2-11, 2-13

1-557-010362-63 . 2-109, 2-125, 2-222, 2-274, 2-329

155780 2-5

1-560-010002-02 2-67, 2-69, 2-71, 2-73, 2-75, 2-103, 2-310

1-560-010002-03 . . . . . 2-67, 2-69, 2-265

Eastern Wrecker Sales, Inc. - www.easternwrecker.com - 919-553-4038

1-560-010002-04 *2-35, 2-43, 2-45, 2-67, 2-69, 2-71, 2-73, 2-75, 2-103*
1-560-010002-05 *2-35, 2-67, 2-69, 2-71, 2-73, 2-75, 2-103*
1-560-010002-07 . . . . . *2-35, 2-37*
156003 . . . . . *2-5*
156006 . . . . . *2-5*
156010 . . . . . *2-5*
156067 . . . . . *2-292*
156069 . . . . . *2-292*
156510 . . . . . *2-287*
156511 . . . . . *2-305*
156512 . . . . . *2-291*
156528 . . . . . *2-201*
156655 . . . . . *2-89*
156699 . . . . . *2-276*
157256 . . . . . *2-270*
157257 . . . . . *2-271*
157263 . . . . . *2-271*
157662 . . . . . *2-37*
157663 . . . . . *2-37*
157664 . . . . . *2-37*
157673 . . . . . *2-271*
157677 . . . . . *2-271*
157679 . . . . . *2-271*
157702 . . . . . *2-53, 2-63, 2-65*
157703 . . . . . *2-61, 2-63*
157704 . . . . . *2-63*
157705 . . . . . *2-63*
157706 . . . . . *2-63*
157707 . . . . . *2-63*
158400 . . . . . *2-271*
158540 . . . . . *2-56*
158541 . . . . . *2-56*
158549 . . . . . *2-57*
158580 . . . . . *2-19*
158581 . . . . . *2-19*
159259 . . . . . *2-271*
159260 . . . . . *2-271*
159261 . . . . . *2-271*
159337 . . . . . *2-63*
159338 . . . . . *2-63*
160094 . . . . . *2-193*
160103 . . . . . *2-332*
160222 . . . . . *2-49*
160231 . . . . . *2-276*
160708 . . . . . *2-48, 2-69*
161142 . . . . . *2-11, 2-15*
161150 . . . . . *2-209, 2-211*
161151 . . . . . *2-211*
161153 . . . . . *2-211*
161154 . . . . . *2-211*
161155 . . . . . *2-209*
161157 . . . . . *2-13, 2-17, 2-39, 2-41*
161573 . . . . . *2-193*
161590 . . . . . *2-135, 2-151*
161784 . . . . . *2-149*
161785 . . . . . *2-149*
161797 . . . . . *2-51, 2-59*
161808 . . . . . *2-8*
161809 . . . . . *2-8, 2-222*
161810 . . . . . *2-8*
161824 . . . . . *2-5, 2-8*
162207 . . . . . *2-135, 2-141, 2-151, 2-157*
162208 . . . . . *2-135, 2-141*
162209 . . . . . *2-151*
162210 . . . . . *2-135, 2-141, 2-151, 2-157*
162211 . . . . . *2-135, 2-141, 2-151, 2-157*
162213 . . . . . *2-135, 2-141*
162214 . . . . . *2-135, 2-141*
162215 . . . . . *2-135, 2-141, 2-151, 2-157*
162216 . . . . . *2-135, 2-141, 2-151, 2-157*
162217 . . . . . *2-135, 2-151, 2-157*
162218 . . . . . *2-135, 2-141, 2-151, 2-157*
162219 . . . . . *2-135, 2-141, 2-151, 2-157*
162220 . . . . . *2-135, 2-141*

Eastern Wrecker Sales, Inc. - www.easternwrecker.com - 919-553-4038

162258 2-213
162259 2-213
162260 2-213
162403 2-87
162415 2-168
1-626-010002-03 . . . . . 2-217, 2-220, 2-228
1-626-010002-06 . . . . . 2-228, 2-253, 2-255
162940 2-151
162941 . . . . . 2-141, 2-151, 2-157
162942 . . . . . 2-151, 2-157
162943 . . . . . 2-151, 2-157
162944 . . . . . 2-151, 2-157
162945 . . . . . 2-151, 2-157
1-630-010021-01 . . . . . 2-11, 2-13
1-630-010021-02 2-8
163357 2-171
163359 2-41
163360 2-17
163361 2-17
163363 . . . . . 2-13, 2-41, 2-45
163472 2-176
163502 2-259
163769 2-207
163770 2-207
163790 2-336
163791 2-336
163797 2-290
163798 2-290
163996 . . . 2-111, 2-113, 2-285, 2-287, 2-288, 2-289
164012 2-288
164052 . . 2-113, 2-285, 2-287, 2-288, 2-289, 2-305, 2-309
164053 . . . . . 2-139, 2-149, 2-155, 2-288, 2-308
164115 2-8
164120 2-250
164121 2-250
164428 . . . . . 2-48, 2-56
164429 2-56
164430 . . . . . 2-48, 2-56
164431 2-56
164434 2-335
164569 2-290
164588 2-283
1-647-010004165 2-295
1-647-010004177 . . . . . 2-117, 2-121, 2-125
1-647-010004213 2-125
1-647-010004225 . . . . . 2-117, 2-121, 2-125, 2-129
1-647-010004255 . . 2-8, 2-160, 2-164, 2-168, 2-171
1-654-010024014 . . . . . 2-161, 2-164, 2-196
1-654-010024055 . . . . . 2-161, 2-164, 2-168
1-654-010027-7 . . . . . 2-11, 2-13, 2-301
1-654-010032-4 . . . . . 2-48, 2-56, 2-97
1-654-010036-05 . 2-160, 2-164, 2-168, 2-196, 2-199
1-654-010047-03 . . . . . 2-299, 2-339
1-654-010047-04 . . 2-9, 2-37, 2-79, 2-81, 2-83, 2-85, 2-193, 2-303, 2-319
1-654-010047-05 2-290
1-654-010047-06 . . . . 2-8, 2-39, 2-101, 2-196, 2-264, 2-270, 2-279, 2-281, 2-283, 2-297, 2-305, 2-307, 2-308, 2-309
1-654-010047-07 . . . . . 2-8, 2-59, 2-99, 2-313, 2-317
1-654-010049-03 2-93
1-654-010049-05 . . . 2-8, 2-111, 2-137, 2-149, 2-153, 2-285, 2-287, 2-289, 2-290, 2-291, 2-305, 2-307
1-654-010049-06 2-301
1-654-010049-09 2-270
1-654-010049-11 . . . . . 2-217, 2-220, 2-228, 2-253
1-654-010049-19 2-19
1-654-010051-03 . . . . . 2-322, 2-323
1-654-010051-05 . . . . . 2-8, 2-21, 2-48, 2-217, 2-220, 2-228, 2-250, 2-253, 2-295, 2-339
1-654-010051-06 . . 2-35, 2-109, 2-160, 2-171, 2-264, 2-270, 2-327, 2-329, 2-332, 2-335
1-654-010051-07 . . 2-8, 2-11, 2-13, 2-37, 2-48, 2-56, 2-97, 2-149, 2-204, 2-297, 2-327
1-654-010051-08 2-67, 2-69, 2-71, 2-73, 2-75, 2-103, 2-270, 2-299
1-654-010051-09 . . . . . 2-264, 2-276

Eastern Wrecker Sales, Inc. - www.easternwrecker.com - 919-553-4038

1-654-010051-10 . . . . . *2-250*

1-654-010051-13 . . . . . *2-332*

1-654-010053-05 . . . . . *2-327*

1-654-010055-01 *2-161*, *2-164*, *2-168*, *2-179*, *2-325*, *2-331*

1-654-010055-02 . *2-25*, *2-115*, *2-127*, *2-193*, *2-265*, *2-272*, *2-273*, *2-305*, *2-307*, *2-332*

1-654-010055-03 . . . . *2-35*, *2-37*, *2-56*, *2-97*, *2-109*, *2-111*, *2-161*, *2-168*, *2-205*, *2-211*, *2-213*, *2-215*, *2-225*, *2-231*, *2-233*, *2-235*, *2-237*, *2-239*, *2-241*, *2-264*, *2-270*, *2-274*

1-654-010055-04 . *2-35*, *2-111*, *2-159*, *2-164*, *2-168*, *2-171*, *2-196*, *2-199*, *2-209*, *2-213*

1-654-010055-05 . . . . . *2-164*, *2-168*, *2-224*, *2-311*

1-654-010055-07 *2-121*, *2-125*, *2-171*, *2-270*, *2-325*

1-654-010055-09 . . . . . *2-117*, *2-265*, *2-272*, *2-331*

1-654-010055-10 . . . . . *2-213*, *2-273*

1-654-010055-11 . . . . . *2-8*

1-654-010055-13 . . . . . *2-109*, *2-320*

1-654-010055-15 . . . . . *2-331*

1-654-010055-16 . . . . . *2-160*, *2-171*

1-654-010055-17 . . . . . *2-185*, *2-196*, *2-199*

1-654-010055-18 . . . . . *2-331*

1-654-010059-01 . . *2-56*, *2-97*, *2-231*, *2-233*, *2-235*, *2-237*, *2-239*, *2-241*

1-654-010059-03 . . . . . *2-250*, *2-251*, *2-253*

1-654-010059-05 . . . . . *2-37*, *2-251*, *2-253*

1-654-010059-09 . . . . . *2-191*

1-654-010059-11 . . . . . *2-337*

1-654-010059-15 . . . . . *2-160*, *2-164*, *2-168*, *2-171*

1-654-010059-16 . . . . . *2-160*

1-654-010059-21 . . . . . *2-197*

1-654-010061-03 . . . . . *2-25*

1-654-010061-05 . . . . . *2-117*, *2-121*, *2-207*, *2-336*

1-654-010061-07 . . . . . *2-11*, *2-13*, *2-185*

1-654-010065-15 . . . . . *2-334*

1-654-010065-17 . . . . . *2-333*

1-654-010070-03 . . . . . *2-338*

1-654-010141-04 *2-160*, *2-164*, *2-168*, *2-196*, *2-199*

1-654-010147-06 . . . . . *2-9*, *2-327*

1-654-010158-1 . . . . . *2-11*, *2-13*, *2-48*, *2-56*, *2-97*

165429 . . . . . *2-137*, *2-153*

1-656-010003051 . . *2-39*, *2-81*, *2-83*, *2-111*, *2-295*, *2-321*

165768 . . . . . *2-244*

165769 . . . . . *2-244*

165788 . . . . . *2-111*, *2-113*

165789 . . . . . *2-113*

166001 . . . . . *2-313*

166002 . . . . . *2-313*

166766 . . . . . *2-265*

166767 . . . . . *2-205*

166768 . . . . . *2-205*

166821 . . . . . *2-313*

167-0022 . . . . . *2-129*

167521 . . . . . *2-141*

167522 . . . . . *2-137*, *2-139*

167691 . . . . . *2-33*

167692 . . . *2-53*, *2-61*, *2-79*, *2-81*, *2-83*, *2-85*, *2-133*, *2-145*, *2-149*, *2-155*, *2-161*, *2-165*, *2-169*, *2-185*, *2-196*, *2-199*, *2-310*

167818 . . . . . *2-135*

167819 . . . . . *2-135*

167820 . . . . . *2-135*

167821 . . . . . *2-135*

167840 . . . . . *2-115*

167843 . . . . . *2-115*

167965 . . . . . *2-293*, *2-297*

167971 . . . . . *2-111*, *2-113*

167972 . . . . . *2-111*

167975 . . . . . *2-111*

167978 . . . . . *2-149*

168543 . . . . . *2-17*

168544 . . . . . *2-17*

168545 . . . . . *2-17*

168546 . . . . . *2-17*

168610 . . . . . *2-107*

168612 . . . . . *2-107*

168613 . . . . . *2-107*

Eastern Wrecker Sales, Inc. - www.easternwrecker.com - 919-553-4038

168614 2-107
168615 2-107
168616 2-107
168617 2-107
168618 2-107
168648 2-39
168709 2-288
168720 2-309
168721 2-309
168872 2-303
168975 2-39
168976 2-39
168982 2-39
169201 2-289
169202 2-289
169216 2-271
169245 2-199
169255 2-222
169258 2-222
169410 2-39
169424 . . . . . 2-48, 2-56
169425 2-56
169426 . . . . . 2-48, 2-56
169452 . . . . . 2-131, 2-133
169453 . . . . . 2-131, 2-133
169531 2-264
169532 2-265
169534 2-308
169619 . . . . . 2-253, 2-255
169620 . . . . . 2-228, 2-255
169622 2-255
169624 . . . . . 2-228, 2-255
169626 . . . . . 2-228, 2-255
169627 2-255
169628 2-255
169629 2-255
169630 2-255
169635 2-41
169639 2-334
169641 2-334
169836 2-222
169843 2-23
169845 . . . . . 2-217, 2-220, 2-222
169848 . . . . . 2-217, 2-220
169849 2-220
169852 2-220
169853 . . 2-113, 2-285, 2-287, 2-289, 2-305, 2-309
169865 . . . . . 2-217, 2-221
169880 2-293
169881 2-295
169885 2-295
169886 2-295
169887 . . . . . 2-293, 2-295
169888 . . . . . 2-293, 2-295
169891 2-295
169927 2-287
169929 . . . . . 2-143, 2-145
169930 . . . . . 2-143, 2-145
169932 2-75
170109 2-265
170110 2-265
170111 2-265
170112 2-265
170378 2-125
170446 2-25
170447 . . . . . 2-13, 2-25
170448 . . . . . 2-13, 2-25
170454 2-228
170471 2-319
1709AS669-01 2-271
171159 2-319
171160 2-319
171161 2-319
171166 . . . . . 2-224, 2-285
171167 . . . . . 2-224, 2-327
171168 2-285

Eastern Wrecker Sales, Inc. - www.easternwrecker.com - 919-553-4038

171225 2-49
171302 2-39
171303 2-39
171320 . . . . . 2-11, 2-13, 2-15, 2-17, 2-19, 2-41
171934 2-295
171935 2-295
171936 2-295
171942 2-57
171963 2-89
171964 2-89
172100 2-56
172101 2-56
172437 . . . . . 2-313, 2-315
172628 2-149
172775 . . . . . 2-57, 2-233
172776 2-233
172848 2-233
172851 2-228
172852 2-228
172853 2-323
172854 2-323
172862 2-228
172877 2-157
172878 . . . . . 2-153, 2-155
172882 2-299
172903 2-201
173498 . . . . . 2-153, 2-155
173499 . . . . . 2-153, 2-155
173511 2-125
173866 2-315
173875 2-85
173876 . . . . . 2-79, 2-85
173877 . . . . . 2-48, 2-79
174043 . . . . . 2-137, 2-149, 2-153, 2-285
174058 2-339
174061 2-339
174091 2-339
174092 2-339
174099 2-217
174100 2-217
174137 . . . . . 2-48, 2-67
174138 2-48
174139 2-308
174140 2-308
174141 2-308
174142 2-308
174143 2-67
174175 . . . . . 2-137, 2-139
174179 . . . . . 2-57, 2-235
174180 . . . . . 2-57, 2-237
174181 . . . . . 2-235, 2-237
174184 2-235
174185 2-235
174186 2-237
174187 2-237
174188 . . . . . 2-139, 2-155
174241 2-67
174253 2-337
174254 2-337
174265 . . . . . 2-217, 2-221
174266 2-220
174267 2-220
174550 . . . . . 2-149, 2-153
174551 2-137
174552 . . . . . 2-153, 2-155
174553 . . . . . 2-137, 2-139
174597 2-335
174598 2-321
174670 2-49
175029 2-220
175030 2-220
175033 2-220
175350 2-319
175358 2-317
175359 2-317
175360 2-317

Eastern Wrecker Sales, Inc. - www.easternwrecker.com - 919-553-4038

175363 2-317
175365 2-317
175583 2-39
175616 2-222
175617 . . . . . 2-220, 2-222
175620 2-222
175640 2-220
175754 . . . . . 2-95, 2-101, 2-103, 2-105
175938 2-327
175940 2-327
175942 2-327
175989 2-321
176069 2-327
176070 . . . . . 2-95, 2-97, 2-99, 2-101
176072 . . . . . 2-95, 2-97
176076 . . . . . 2-101, 2-107
176286 . . . . . 2-111, 2-113
176377 2-333
176378 2-333
176420 . . . . . 2-298, 2-299
176421 2-299
176424 2-299
176425 2-299
176432 2-298
176440 2-299
176473 . . . . . 2-53, 2-61, 2-65
176476 2-65
176477 2-65
176478 2-65
176479 2-65
1-765-010065 . . . . . 2-160, 2-164, 2-196
176681 2-201
176800 2-217
176801 2-217
176865 . . . . . 2-95, 2-103
176876 2-105
178342 2-220
178384 2-299
178389 2-299
178401 2-220
178592 2-107
178647 2-298
178714 2-157
178715 . . . . . 2-141, 2-157
178716 2-157
178717 2-157
178718 2-141
178999 2-141
179000 2-141
179001 2-141
179103 2-87
179104 2-87
179568 2-105
179569 2-105
179570 2-105
179571 2-105
179572 2-105
179573 2-105
179574 2-105
179575 2-105
179576 2-105
179577 2-105
179578 2-105
179579 2-105
179580 2-105
179581 2-105
179582 2-105
179583 2-105
179584 2-105
179585 2-105
1-796-010002-01 2-295
1-796-010003-02 . . . . 2-11, 2-13, 2-48, 2-217, 2-220, 2-228, 2-298
1-796-010004-02 . . . . . 2-48, 2-79, 2-81, 2-83
179606 2-220
179649 . . 2-217, 2-220, 2-229, 2-249, 2-253, 2-255

Eastern Wrecker Sales, Inc. - www.easternwrecker.com - 919-553-4038

179902 2-39
179925 2-5
179926 2-5
179933 . . . . . 2-93, 2-336
18002 . . . . . 2-174, 2-177
18009 2-173
18015 2-173
18016 2-173
18019 2-173
18020 2-173
18022 2-176
180221 2-317
180222 2-107
180223 2-107
180224 2-107
180225 2-107
180226 2-107
180227 2-107
180228 2-107
180229 2-107
18024 2-173
18026 2-173
18027 2-173
18028 2-173
18029 2-173
18030 2-173
18032 2-173
18033 2-176
18034 2-176
18035 2-176
18039 2-173
18044 2-173
18047 . . . . . 2-173, 2-176
180538 2-335
180539 2-335
18056 2-174
180584 2-201
180585 2-201
180586 2-201
18078 2-173
1-822-010002 . . . . . 2-115, 2-270, 2-287, 2-305
1-833-010001 . 2-53, 2-61, 2-79, 2-81, 2-101, 2-133, 2-139, 2-145, 2-149, 2-155, 2-160, 2-168, 2-185, 2-193, 2-196, 2-199, 2-319
1-833-010002 . . . 2-41, 2-67, 2-69, 2-71, 2-73, 2-79, 2-81, 2-103, 2-310, 2-322
1-833-010003 . . 2-41, 2-67, 2-69, 2-71, 2-73, 2-103
1-843-010014 . . . . . 2-48, 2-56, 2-93
184392 2-317
1-861-010032-01 . . . . . 2-161, 2-164, 2-196
1-861-010032-03 . . . . . 2-111, 2-321
1-861-010032-06 . . 2-9, 2-161, 2-197, 2-301, 2-305, 2-307
1-861-010032-07 . . 2-9, 2-37, 2-48, 2-56, 2-59, 2-97, 2-99, 2-101, 2-270, 2-279, 2-281, 2-283, 2-290, 2-308, 2-313, 2-317, 2-319, 2-339
1-861-010032-08 . . . . . 2-8, 2-270
1-861-010032-09 2-111, 2-137, 2-149, 2-153, 2-217, 2-220, 2-228, 2-253, 2-285, 2-287, 2-289, 2-290, 2-291, 2-301, 2-305, 2-307
1-861-010032-10 . . . . 2-8, 2-21, 2-37, 2-160, 2-164, 2-168, 2-171, 2-196, 2-199, 2-299
1-861-010032-11 . . 2-8, 2-11, 2-13, 2-48, 2-56, 2-67, 2-69, 2-71, 2-73, 2-75, 2-97, 2-103, 2-109, 2-149, 2-204, 2-228, 2-250, 2-253, 2-264, 2-270, 2-297, 2-327, 2-329, 2-332, 2-335
1-861-010032-13 2-327
1-861-010032-14 2-137, 2-153, 2-161, 2-164, 2-168, 2-179, 2-196, 2-231, 2-233, 2-235, 2-237, 2-239, 2-241, 2-274
1-861-010032-15 . 2-25, 2-109, 2-111, 2-115, 2-117, 2-121, 2-125, 2-127, 2-159, 2-164, 2-168, 2-171, 2-185, 2-193, 2-209, 2-213, 2-224, 2-264, 2-270, 2-272, 2-273, 2-305, 2-307, 2-311, 2-325, 2-331, 2-332, 2-338
1-861-010032-18 . 2-37, 2-161, 2-164, 2-169, 2-171, 2-191
1-861-010032-19 . . . . . 2-193, 2-250
1-861-010032-20 . . . . . 2-193, 2-207, 2-336
1-861-010032-21 2-334
1-861-010032-29 . . . . . 2-11, 2-13

Eastern Wrecker Sales, Inc. - www.easternwrecker.com - 919-553-4038

1-861-010034-07 . . . *2-39*, *2-81*, *2-83*, *2-111*, *2-161*, *2-321*

1-861-010034-09 . *2-8*, *2-11*, *2-13*, *2-48*, *2-56*, *2-97*, *2-161*, *2-164*, *2-169*, *2-179*, *2-193*, *2-197*, *2-264*, *2-270*

1-861-010034-10 . . . . . *2-93*

1-861-010034-11 . . . . . *2-21*, *2-109*, *2-149*, *2-204*

1-861-010034-13 . . . *2-35*, *2-37*, *2-87*, *2-161*, *2-171*, *2-265*

1-861-010034-15 *2-131*, *2-137*, *2-143*, *2-149*, *2-153*, *2-191*, *2-231*, *2-233*, *2-235*, *2-237*, *2-239*, *2-241*

1-861-010034-17 . . . . . *2-48*, *2-185*

186811 . . . . . *2-264*, *2-270*

187787 . . . . . *2-8*, *2-222*

187790 . . . . . *2-222*

1-879-010010 . . . . . *2-160*, *2-164*

189318 . . . . . *2-48*, *2-57*

189383 . . . . . *2-49*

189838 . . . . . *2-57*

19045 . . . . . *2-173*, *2-176*

190700ZP *2-49*, *2-57*

190701 . . . . . *2-49*, *2-57*

190705ZP *2-49*, *2-57*

190706 . . . . . *2-49*, *2-57*

194731 . . . . . *2-249*

194732 . . . . . *2-249*

194733 . . . . . *2-249*

194734 . . . . . *2-249*

194735 . . . . . *2-249*

195320 . . . . . *2-105*

1974 . . . . . *2-179*

1V0208 . . . . . *2-229*

20-12 140140 . . . . . *2-37*

20-20-20 140424 . . . . . *2-37*

2024-12-12S *2-35*, *2-37*, *2-264*, *2-271*

2024-12-8S *2-35*, *2-37*, *2-229*

2024-2-4S *2-51*, *2-59*, *2-99*

202702-10-8S . . . *2-139*, *2-149*, *2-155*, *2-159*, *2-164*, *2-169*, *2-171*

202702-12-12S *2-19*

202702-20-20S *2-264*, *2-271*

202702-6-4S *2-231*, *2-241*

202702-6-6S *2-217*, *2-221*, *2-229*, *2-233*, *2-237*, *2-255*

202702-6-8S *2-229*

202702-8-8S *2-15*, *2-17*, *2-185*, *2-276*, *2-277*

203005-8-8S *2-217*, *2-221*, *2-229*, *2-255*

203102-12-12S . . *2-217*, *2-221*, *2-229*, *2-255*, *2-264*, *2-271*

2033-4-4S *2-241*

2033-6-6S *2-217*, *2-220*

2033-8-8S *2-15*, *2-17*, *2-161*

2045-6-6S *2-41*, *2-103*

2047-12-12S *2-35*, *2-37*

206209-12-12S *2-264*, *2-271*

2062-10-12S *2-21*, *2-217*, *2-220*, *2-229*, *2-255*

2062-10-8S *2-160*, *2-164*, *2-169*, *2-171*

2062-12-12S *2-264*, *2-271*

2062-12-8S *2-133*, *2-145*, *2-149*

2062-16-8S *2-35*, *2-37*

2062-6-4S *2-231*, *2-235*, *2-239*, *2-241*

2062-6-6S *2-222*, *2-233*, *2-237*

2062-8-6S *2-217*, *2-220*, *2-229*, *2-255*

2062-8-8S . . . *2-15*, *2-17*, *2-25*, *2-196*, *2-199*, *2-217*, *2-220*, *2-229*, *2-255*

2071-12-12S *2-271*

2081-8-4S *2-71*

2081-8-6S *2-43*, *2-45*, *2-75*

2083-8-4S *2-53*, *2-61*, *2-79*, *2-81*, *2-83*, *2-101*, *2-310*

2083-8-8S *2-69*

2088-6-6S *2-43*, *2-45*, *2-71*, *2-73*, *2-75*, *2-103*

2089-6-6S . *2-45*, *2-67*, *2-69*, *2-71*, *2-73*, *2-75*, *2-103*

2-095-010017 . . . . . *2-339*

2-150-010240 . . . . . *2-299*

2-181-010001 . . . . *2-8*, *2-11*, *2-13*, *2-49*, *2-57*, *2-95*, *2-160*, *2-171*, *2-217*, *2-231*, *2-233*, *2-235*, *2-237*, *2-239*, *2-241*

21925 . . . . . *2-173*

2216-12-12S *2-275*

Eastern Wrecker Sales, Inc. - www.easternwrecker.com - 919-553-4038

2240-12-12S *2-265*, *2-271*
2263 . . . . . *2-181*
2-272-010109 . . . . . *2-160*, *2-196*
22752 . . . . . *2-173*
23078 . . . . . *2-174*, *2-177*
23079 . . . . . *2-174*, *2-177*
23081 . . . . . *2-174*, *2-177*
23083 . . . . . *2-174*
23085 . . . . . *2-174*
23303 . . . . . *2-173*
23367 . . . . . *2-176*
23470 . . . . . *2-173*
2389 . . . . . *2-179*
239-3646-4 . . . . . *2-164*
239-3646-5 . . . . . *2-39*
239-3650-1 . . . . . *2-164*
239-9076-1 . . . . . *2-295*
2481X *2-264*, *2-271*
2-557-010006 . . . . . *2-125*
2-557-010054 . . . . . *2-222*
2-557-010426 . . . . . *2-337*
2-573-010335 . . . . . *2-5*
26331 . . . . . *2-39*
26976 . . . . . *2-176*
2-720-010002 . . . . . *2-9*
3/8 P COUPLING *2-265*
300092 . . . . . *2-244*
3-014-010255 . . . . . *2-161*, *2-164*, *2-169*
3-054-010101 . . . . . *2-109*
3067 . . . . . *2-93*
3-076-010005 . . . . . *2-49*, *2-51*
3-076-010015 . . . . . *2-57*, *2-59*, *2-97*, *2-99*
31023-01 . . . . . *2-101*
3-120-010124 . . . . . *2-264*, *2-271*
3-120-010445 . . . *2-160*, *2-164*, *2-169*, *2-185*, *2-196*, *2-199*, *2-322*, *2-323*
3-120-010461 . . . . . *2-35*
3-120-010494 . . . . . *2-213*, *2-215*
3-125-010464 . . . . . *2-160*, *2-171*, *2-332*
3-125-010465 . . . . . *2-160*, *2-164*, *2-169*
3-128-010025 . . . . . *2-310*
3-128-010032 . . . . . *2-292*
3-136-010001-01 . . . . . *2-161*, *2-164*, *2-196*
3-141-010008 . . . . . *2-109*
3-141-010121 . . . . . *2-109*
3-141-010121-2 . . . . . *2-274*
3-141-010155 . . . . . *2-109*
3-150-010005 . . . . . *2-197*
3-150-010186 . . . . . *2-160*, *2-164*, *2-169*, *2-179*
3-150-010196 . . . . . *2-160*, *2-165*, *2-169*, *2-171*
3-155-010017-4 . . . . . *2-160*, *2-196*
3-155-010018-6 . *2-131*, *2-137*, *2-160*, *2-165*, *2-169*, *2-171*, *2-196*, *2-199*
3-156-010008 . . . . . *2-165*
3-162-010001 . . . . . *2-35*, *2-265*, *2-271*
3-174-010038 . . *2-131*, *2-137*, *2-160*, *2-165*, *2-169*, *2-171*, *2-196*, *2-199*
3-174-010039036 *2-131*, *2-137*, *2-143*, *2-149*, *2-153*, *2-160*, *2-165*, *2-169*, *2-171*, *2-196*, *2-199*
3-174-010059 . . . . . *2-143*, *2-149*, *2-153*, *2-185*
3-174-010060036 . . . . . *2-185*
3-181-010006 . . . . . *2-220*
3-182-010028 . . . . . *2-265*, *2-271*
3-187-010013 . . . . . *2-57*, *2-97*
32002 . . . . . *2-305*, *2-307*
3-201-010001036 . . . . . *2-196*
3-201-010002 . . . . . *2-8*, *2-229*
3-203-010025 . . . . . *2-283*
3-242-010189 . . . . . *2-11*, *2-13*, *2-15*, *2-17*, *2-33*
3-242-010205 . . *2-231*, *2-233*, *2-235*, *2-237*, *2-239*, *2-241*, *2-244*
3-272-010010 . . . . . *2-297*
3-272-010017 . . . . . *2-278*, *2-307*, *2-308*
3-272-010018 . . . . . *2-196*
3-272-010021 . . . . . *2-165*, *2-278*, *2-297*
3-272-010157 . . . . . *2-165*, *2-292*
3-316-010008 . . . . . *2-265*

Eastern Wrecker Sales, Inc. - www.easternwrecker.com - 919-553-4038

3-348-010048 . . . . . *2-161*, *2-165*, *2-196*

3-352-010067-2 . . . . . *2-213*, *2-215*

3-360-010014 . . . . . *2-327*

3-360-010072 . . . . . *2-21*

3-360-010090 . . . . . *2-21*

3-368-010125 . . . . . *2-196*

3-368-010129 . . . . . *2-160*, *2-165*

3-368-010187 . . . . . *2-160*, *2-196*

3-368-010188 . . . . . *2-161*, *2-197*

3-368-010252 . . . . *2-39*, *2-113*, *2-137*, *2-139*, *2-149*, *2-155*, *2-285*, *2-287*, *2-288*, *2-303*, *2-305*, *2-307*, *2-319*

3-368-010253 . . . . . *2-278*, *2-307*

3-384-010020 . . . . . *2-67*, *2-69*

3-384-010031 . . . . . *2-67*, *2-69*

3-384-010049024 . . . . . *2-75*

3-384-010049032 . . . . . *2-75*

3-384-010049060 . . . . . *2-75*

3-399-010001 . . . . . *2-35*, *2-37*

3-399-010001006 . . . . . *2-265*

3-443-010018 . . . . . *2-265*, *2-271*

346SL *2-251*, *2-253*

3-481-010006 . . . . . *2-159*, *2-171*, *2-181*

3-481-010007 . . . *2-159*, *2-165*, *2-169*, *2-171*, *2-181*

3-482-010249 . . . . . *2-109*

3-482-010472 . . . . . *2-239*

3-482-010503 . . . . . *2-35*

3-485-010001 . . . . . *2-49*, *2-57*, *2-97*

3-522-010017 . . . . . *2-161*, *2-165*, *2-169*

3-557-010031 . . . . . *2-11*, *2-13*

3-557-010033 . . . . . *2-11*, *2-13*

3-557-010380 . . . . . *2-109*, *2-274*

3-557-010469 . . . . . *2-8*

3-557-010470-01 . . . . . *2-11*, *2-13*

3-557-010470-02 . . . . . *2-11*, *2-13*

3-557-010543 . . . . . *2-211*, *2-213*, *2-215*

3-557-010544 . . . . . *2-213*, *2-215*

3-561-010001 . . . . . *2-35*, *2-37*

3-565-011688 . . . . . *2-161*, *2-165*, *2-169*

3-565-011792 . . . . . *2-211*, *2-213*, *2-215*

3-565-011793 . . . . . *2-211*, *2-213*, *2-215*

3-573-010031 . . . . . *2-5*, *2-49*, *2-57*, *2-97*

3-573-010085 . . . . . *2-5*

3-573-010189 . . . . . *2-5*

3-573-010202 . . . . . *2-5*, *2-229*, *2-253*

3-573-010210 . . . . . *2-5*

3-573-010299 . . . . . *2-5*

3-573-010349 . . . . . *2-5*

3-573-010377 . . . . . *2-5*, *2-49*, *2-57*, *2-97*

3-573-010378 . . . . . *2-109*, *2-329*

3-573-010506 . . . . . *2-264*

3-591-010001 . . . . . *2-35*, *2-37*

3-612-010015-1 . . . . . *2-331*

3-612-010015-2 . . . . . *2-331*

3-612-010015-3 . . . . . *2-331*

3-612-010016 . . . . . *2-331*

3-612-010020 . . . . . *2-331*

3-626-010004 . . . *2-160*, *2-165*, *2-169*, *2-185*, *2-196*, *2-199*

3-642-010134 . . . . . *2-8*, *2-320*

3-642-010150 . . . . . *2-160*, *2-171*

3-645-010059 . . . . . *2-8*, *2-320*

3-645-010084 . . . . . *2-57*, *2-59*, *2-97*, *2-99*

3-645-010087 . . . . . *2-211*, *2-213*, *2-215*

3-645-010088 . . . . . *2-213*, *2-215*

3-659-010012 . . . . . *2-93*

3-711-010025 . . . . . *2-109*

3-711-010120 . . . . . *2-197*

3-720-010010 . . . *2-160*, *2-171*, *2-185*, *2-196*, *2-199*

3-720-010035 . . . . . *2-161*, *2-165*, *2-169*

3-720-010042 . . . *2-160*, *2-165*, *2-169*, *2-196*, *2-199*

3-725-010058 . . . . . *2-251*

3-755-010080 . . . . . *2-109*

3-755-010189 . . . . . *2-48*

3-755-010189-1 . . . . . *2-48*, *2-57*

3-762-010017 . . . . . *2-49*, *2-57*, *2-97*, *2-335*

Eastern Wrecker Sales, Inc - www.easternwrecker.com - 919-553-4038

3-765-010050 . . . . . *2-264*, *2-271*

3-780-010002 . . . *2-53*, *2-61*, *2-67*, *2-69*, *2-71*, *2-73*, *2-75*, *2-79*, *2-81*, *2-83*, *2-101*, *2-103*

3-786-010043 . . . . . *2-35*

3-793-010040 . . . . . *2-205*, *2-225*

3-793-010041 . . . . . *2-225*

3-821-010005 . . . . . *2-57*, *2-97*

3-829-010337 . . . . . *2-331*

3-831-010151 . . . . . *2-160*, *2-171*

3-831-010172 . . . . . *2-160*, *2-165*, *2-169*, *2-171*

3-831-010182 . . . . . *2-160*, *2-165*, *2-169*, *2-171*

3-843-010022 . . . . . *2-160*, *2-165*, *2-196*

3-843-010034 . . . . . *2-81*, *2-83*

3-843-010038 . . . . . *2-43*, *2-45*

3-843-010039-02 . . . . . *2-169*, *2-185*, *2-199*

3-846-010056 . . . *2-217*, *2-220*, *2-229*, *2-247*, *2-253*, *2-255*

3-846-010155 . . . . . *2-15*, *2-17*

3-870-010097 . . . . . *2-93*

3-870-010107 . . . . . *2-93*

3-873-010122 . . . . . *2-159*, *2-171*, *2-173*

3-873-010123 . . . *2-159*, *2-165*, *2-169*, *2-171*, *2-176*

3-873-010124 . . . . . *2-160*, *2-171*

3-873-010140 . . . . . *2-159*, *2-205*, *2-215*, *2-332*

3-873-010144 . . . . . *2-159*

3-873-010172 . . . . . *2-185*, *2-193*

3-873-010173 . . . . . *2-185*, *2-187*

3-873-010178-1 . . . . . *2-161*

3-873-010178-3 . . . . . *2-161*

4009 . . . . . *2-93*

4010520 . . . . . *2-247*

4010530 . . . . . *2-247*

514-9045-26 . . . . . *2-265*

514-9045-48 . . . . . *2-271*

514-9073-18 . . . . . *2-265*

514-9073-30 . . . . . *2-271*

516-22PTL *2-117*, *2-121*

5410 . . . . . *2-222*

55B61 . . . *2-19*, *2-67*, *2-69*, *2-71*, *2-73*, *2-75*, *2-103*, *2-133*, *2-139*, *2-145*, *2-149*, *2-155*, *2-169*, *2-185*, *2-199*

55B61-6 . . . . . *2-19*

55B61-7 . . . . . *2-19*

56D4 . . . . . *2-67*, *2-69*, *2-71*, *2-73*, *2-75*, *2-103*

59S-7 . . . . . *2-301*

59W-2-3 . . . . . *2-301*

60700 . . . . . *2-305*, *2-307*

61333 . . . . . *2-174*

622-2967-001 . . . . . *2-309*

622-2967-014 . . . . . *2-309*

622-2967-017 . . . . . *2-309*

622-3511-008 . . . . . *2-49*, *2-57*, *2-97*

63680 . . . . . *2-93*

6405000 . . . . . *2-247*

64181 . . . . . *2-115*, *2-307*

6-557-010163 . . . . . *2-109*, *2-125*, *2-329*

660580002 . . . . . *2-23*

660580003 . . . . . *2-23*

660580004 . . . . . *2-23*

660580005 . . . . . *2-23*

6828 . . . . . *2-35*, *2-37*

70040 . . . . . *2-201*

70042 . . . . . *2-201*

71500166 . . . . . *2-217*, *2-221*

71509010 . . . . . *2-217*, *2-221*

71600529 . . . . . *2-221*

750-029 . . . . . *2-161*, *2-197*, *2-301*, *2-305*, *2-307*

757-363 . . . . . *2-67*

758-181 . . . . . *2-67*, *2-69*, *2-71*, *2-73*, *2-75*, *2-103*

7779-72 . . . . . *2-221*

7HCGHT500 . . . *2-131*, *2-137*, *2-160*, *2-165*, *2-169*, *2-171*, *2-196*, *2-199*

805-2 . . . . . *2-9*, *2-67*, *2-69*, *2-71*, *2-73*, *2-75*, *2-103*

81006 . . . . . *2-173*

81009 . . . . . *2-173*

81025 . . . . . *2-173*

81077 . . . . . *2-176*

Eastern Wrecker Sales, Inc - www.easternwrecker.com - 919-553-4038

81078 2-176
81080 2-176
81081 2-176
81264 . . . . 2-39, 2-111, 2-137, 2-139, 2-149, 2-153, 2-155, 2-285, 2-287, 2-288, 2-289, 2-290, 2-291, 2-305
81530 2-173
85G608E 2-295
88005 2-177
900 08 186 2-87
900 45 040 2-86
900 54 007 . . . . . 2-79, 2-85
900-08-139 2-87
900-25-288 2-87
900-54-079 . . . . . 2-81, 2-83
900598-12S 2-264, 2-271
90508009 2-87
905-54-107 2-53, 2-61, 2-79, 2-81, 2-83, 2-85, 2-133, 2-139, 2-145, 2-149, 2-155, 2-161, 2-165, 2-169, 2-185, 2-196, 2-199, 2-310
905-57-129 2-86
934 00 149 2-87
934 00 492 2-87
934-00-506 2-87
936 00 077 2-87

A

A6760S 2-310
AA-1807 2-191

B

B7-141-003 . . . . . 2-109, 2-287

C

C2001 2-179
C3069X12 2-35
CA-1595 2-271
CO-975-74-2000 . . . . . 2-117, 2-121, 2-125

H

HM212011 2-93
HM212049 2-93
HM218210 2-93
HM218248 2-93

K

K71-101-00 2-89
K71-136-00 2-91
K71-460-00 2-89

P

PMCK-22000 2-33
PTO 2-35

R

RPRB59004X3H 2-325
RTR7999X4ZP 2-161, 2-165, 2-169

S

STP-147 . . . . . 2-39, 2-278
STP-164 2-278

T

TR573 2-93

W

W214S-1 . . . . . 2-278, 2-297

Eastern Wrecker Sales, Inc. - www.easternwrecker.com - 919-553-4038

Eastern Wrecker Sales, Inc. - www.easternwrecker.com - 919-553-4038

Eastern Wrecker Sales, Inc. - www.easternwrecker.com - 919-553-4038

Equipment from Landoll Corporation is built to exacting standards ensured by ISO 9001registration at all Landoll manufacturing facilities.

Model 425B/440/455 Semitrailer Parts Manual

Re-Order Part Number F-544-0114

LANDOLL CORPORATION
1900 North Street
Marysville, Kansas 66508
(785) 562-5381
800-428-5655 ~ WWW.LANDOLL.COM

Copyright 2010. Landoll Corporation
"All rights reserved, including the right to reproduce this material or portions thereof in any form"

Eastern Wrecker Sales, Inc. - www.easternwrecker.com - 919-553-4038