Model 342 Chain Drive Semitrailer Parts Manual

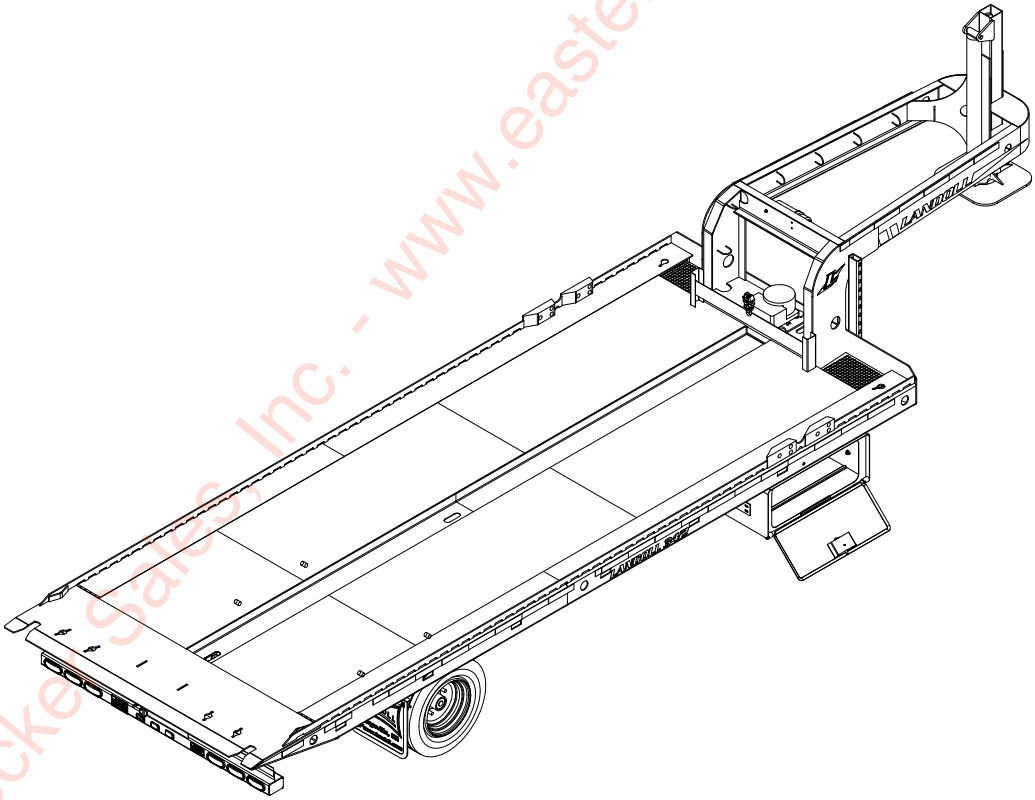

LANDOLL CORPORATION
1900 North Street
Marysville, Kansas 66508
(785) 562-5381
800-428-5655 ~ WWW.LANDOLL.COM

Eastern Wrecker Sales, Inc. - www.easternwrecker.com - 919-553-4038

Eastern Wrecker Sales, Inc. - www.easternwrecker.com - 919-553-4038

Table of Contents

1 Instructions for Ordering Parts

2 Illustrated Parts List

GENERAL ASSEMBLY 2-1
DECAL PLACEMENT 2-3
FIFTH WHEEL HITCH ASSEMBLY, 2” 2-5
MECHANICAL PARKING STANDS 2-6
LANDING GEAR ASSEMBLY, 2 DROP LEG 2-7
HYDRAULIC SYSTEM 2-9
TRAILER TILT CYLINDER 2-10
3 X 108 HYDRAULIC CYLINDER 2-11
3 X 117 HYDRAULIC CYLINDER (CARLSON) 2-13
VALVE ASSEMBLY, THREE SPOOL 2-15
THREE STACK VALVE 2-17
ELECTRICAL SYSTEM 2-19
AIR SYSTEM 2-21
AIR BRAKE SYSTEM, SINGLE AXLE 2-23
BRAKE KIT, ABS 2-25
UNDERCARRIAGE ASSEMBLY - SPRING RIDE 2-27
UNDERCARRIAGE ASSEMBLY - GREASE SYSTEM 2-29
AXLE ASSEMBLY 2-31
HYDRUALIC BRAKE PARTS - DEXTER (12-1/4” X 5”) 2-33
AIR BRAKE PARTS - DEXTER (12-1/4” X 5”) 2-35
15K GENERAL DUTY HUB AND DRUM ASSEMBLY 2-37
GEARBOX ASSEMBLY (CHAIN DRIVE MODEL) 2-39
GEARBOX ITEMS 2-40
WINCH ITEMS - 12M (WARN) 2-41
CONTAINER LOAD CHAIN ASSEMBLY (OPTION) 2-42
CHAIN CONNECT/ CONTAINER ASSEMBLY 2-43
CONTAINER PUSHER ASSEMBLY 2-44
CHAIN AND HOOK ASSEMBLY 2-45

Eastern Wrecker Sales, Inc. - www.easternwrecker.com - 919-553-4038

HOLD-DOWN REAR CONTAINER ASSEMBLY 2-46
STRAP RATCHET 4” X 30’ 2-47
LOAD BINDER 3/8 RATCHET STYLE (OPTION) 2-48
CONTAINER LOCK-DOWN PINS 2-49
27HP GAS ENGINE PACKAGE (OPTION) 2-51
27 HP GAS ENGINE PACKAGE, UPPER DECK (OPTION) 2-56
TOOLBOX INSTALLATION (OPTION) 2-59
TOOLBOX INSTALLATION (OPTION) 2-61
TOOLBOX INSTALLATION (OPTION) 2-63
LADDER ASSEMBLY, STOR-AWAY SHORT (OPTION) 2-65
STROBE LIGHT AND WORK LIGHT 2-67

3 Numerical Index

Eastern Wrecker Sales, Inc. - www.easternwrecker.com - 919-553-4038

Chapter 1

Instructions for Ordering Parts

ORDER PARTS FROM LANDOLL PARTS DISTRIBUTION CENTER

**** Repair parts must be ordered through an Authorized Dealer ****

PHONE NO.: 1-800-423-4320 OR 1-800-428-5655 OR 1-785-562-5381 FAX NO.: 888-527-3909
ORDER ONLINE: companystore.landoll.com

IDENTIFICATION PLATE

The identification plate, which lists the model number and serial number, is located on the front of the frame (See Figure 1-1.)

SERIAL NUMBER NOMENCLATURE

The serial number for the 342 semitrailer is located on the identification plate.

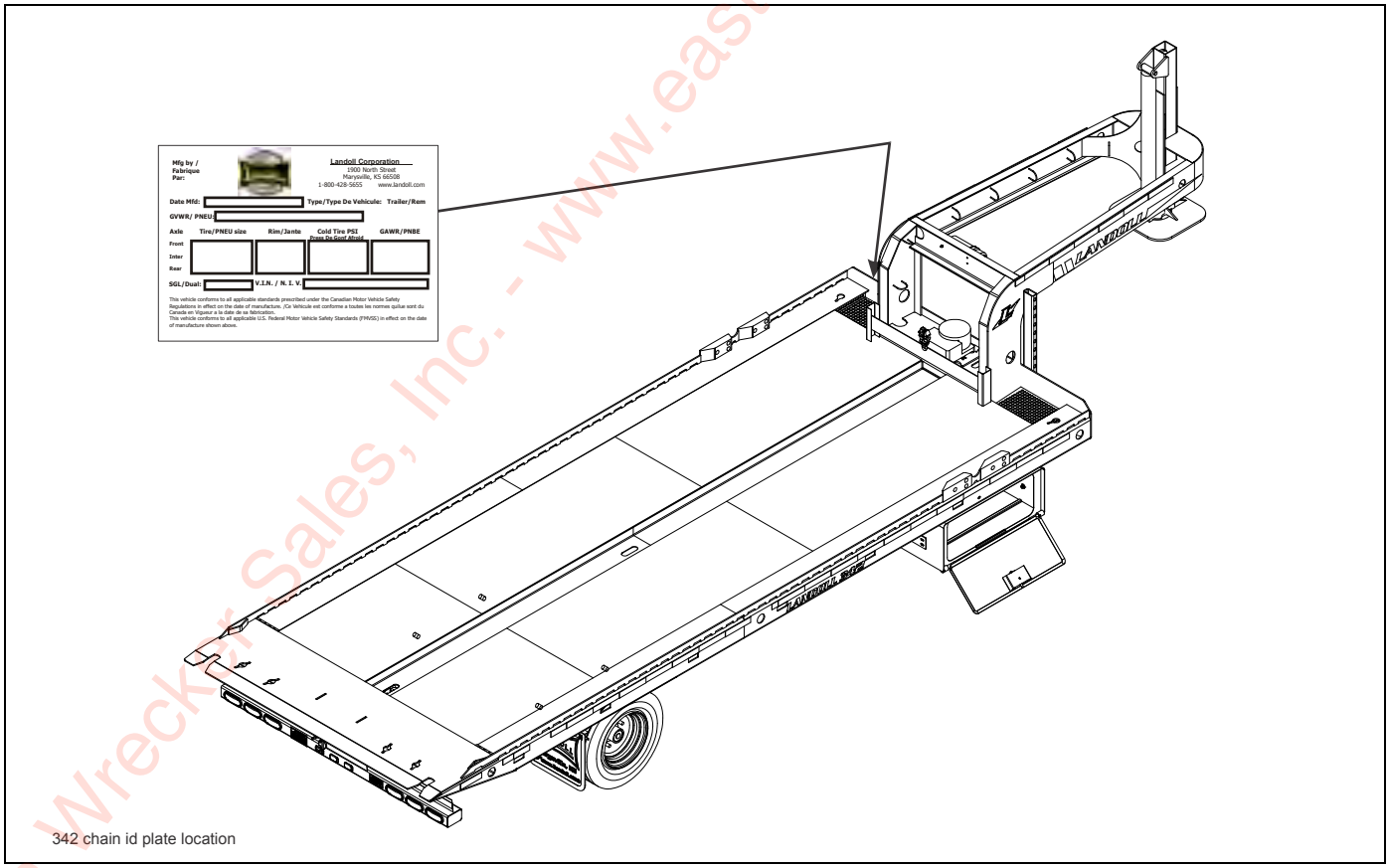

Figure 1-1: Identification Plate and Location

Eastern Wrecker Sales, Inc. - www.easternwrecker.com - 919-553-4038

Page Intentionally Blank

Eastern Wrecker Sales, Inc. - www.easternwrecker.com - 919-553-4038

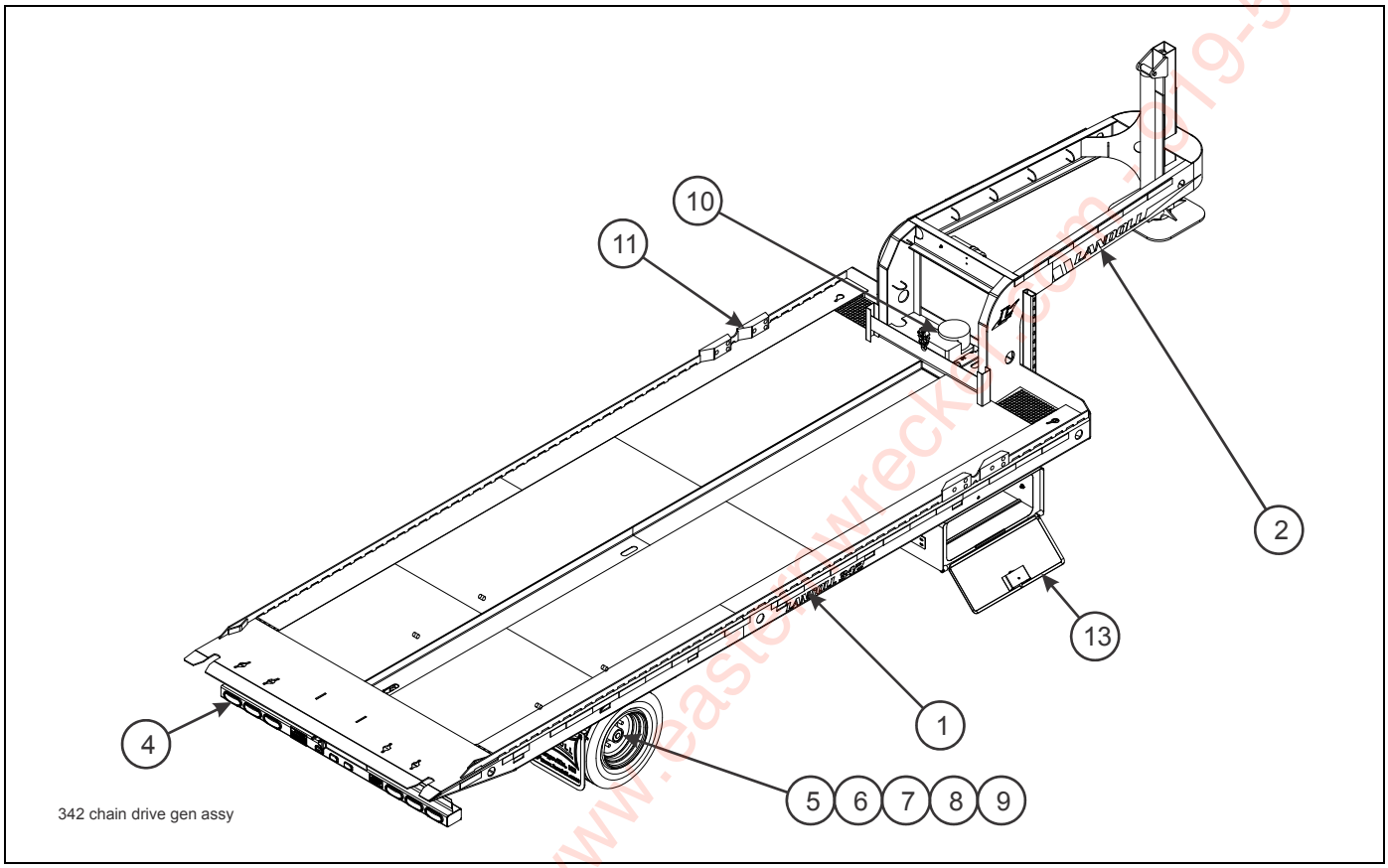

Figure 2-1: General Assembly

GENERAL ASSEMBLY

ITEM	PAGE NO.	DESCRIPTION	QTY.
1	2-2 - 2-3	DECAL INSTALLATION	
2	2-4 - 2-7	HYDRAULIC TILT AND PARKING STAND ASSEMBLIES	
3	2-8 - 2-17	HYDRAULIC ASSEMBLIES (NOT SHOWN)	
4	2-18 - 2-19	ELECTRICAL ASSEMBLIES	
5	2-20 - 2-21	AIR SYSTEM ASSEMBLIES	
6	2-22 - 2-25	AIR BRAKE SYSTEM	
7	2-26 - 2-29	UNDERCARRIAGE ASSEMBLY, SPRING RIDE SUSPENSION	
8	2-30 - 2-33	AXLE AND BRAKE ASSEMBLY	
9	2-36 - 2-37	HUB AND DRUM ASSEMBLY	
10	2-38 - 2-40	GEARBOX ASSEMBLIES	
11	2-42 - 2-49	MISCELLANEOUS CONTAINER AND PUSHER ASSEMBLIES	
12	2-50 - 2-56	AUXILIARY ENGINE ASSEMBLIES (OPTION) (NOT SHOWN)	
13	2-58 - 2-63	TOOLBOX ASSEMBLIES	
14	2-64 - 2-65	LADDER ASSEMBLY (OPTION) (NOT SHOWN)	

Eastern Wrecker Sales, Inc. - www.easternwrecker.com - 919-554-4038

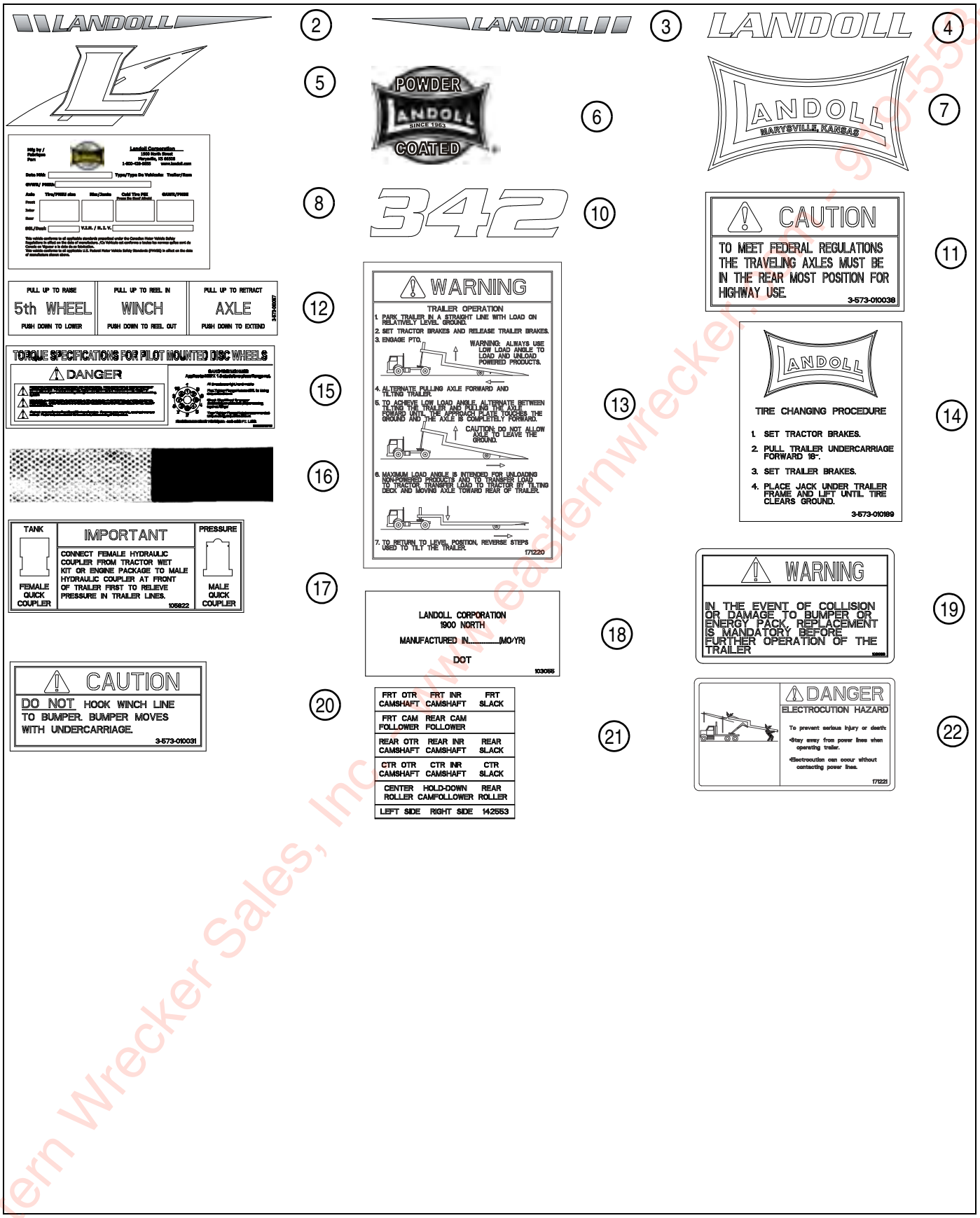

Figure 2-2: Decals

Eastern Wrecker Sales, Inc. www.easternwrecker.com 919-553-4038

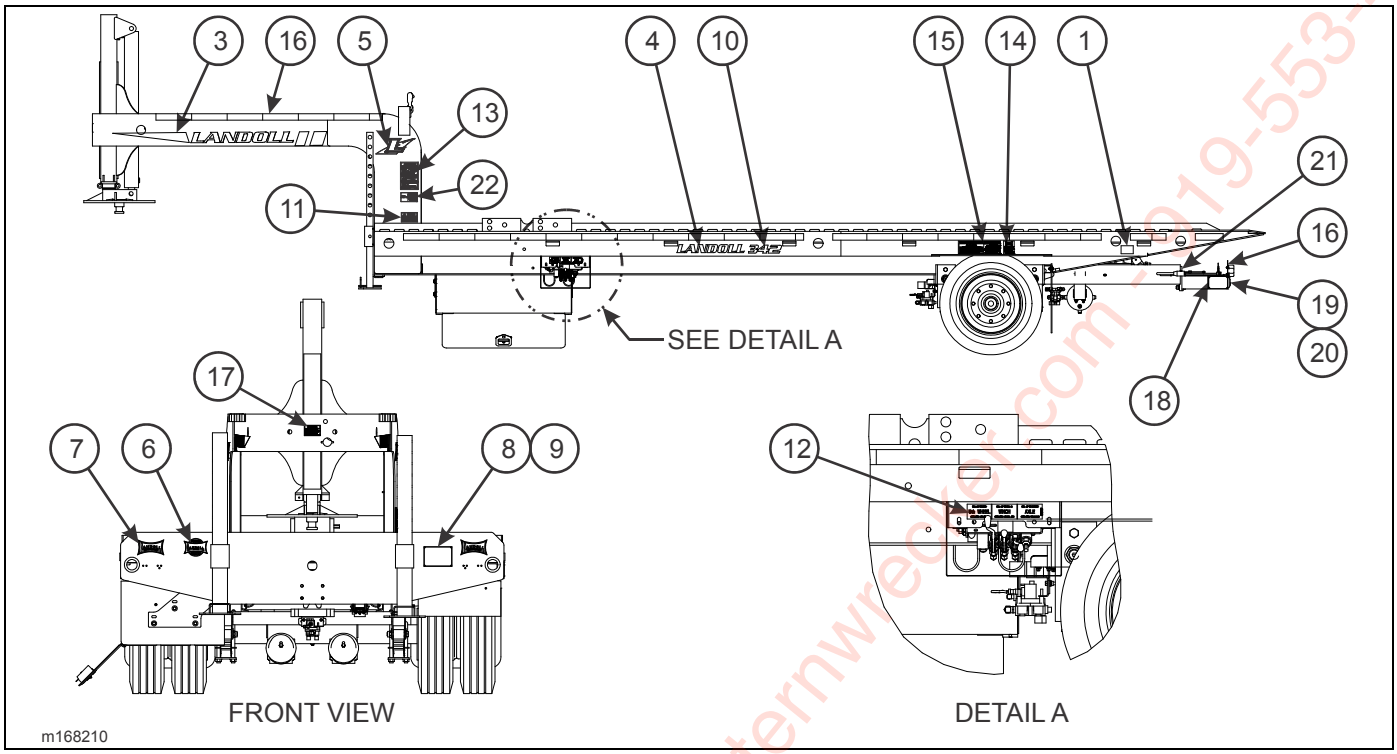

Figure 2-3: Decal Placement

DECAL PLACEMENT

ITEM	PART NO.	DESCRIPTION	QTY.
	168209	DECAL INSTALLATION, 342 BLACK	
	168208	DECAL INSTALLATION, 342 WHITE	
1	101855	WARNING LAMP LABEL, ABS	1
2	153748	DECAL, TAPERED STRIPE RH REFLECTIVE (NOT SHOWN)	1
3	153749	DECAL, TAPERED STRIPE LH REFLECTIVE	1
4	153795	DECAL, LANDOLL REFLECTIVE	2
5	153797	DECAL, HWY L REFLECTIVE 5”	8
6	153798	DECAL, POWDER COATED REFLECTIVE	1
7	153799	DECAL, BOW TIE WHITE	2
	153800	DECAL, BOW TIE BLACK	2
8	155780	INFORMATION FOR TRL VIN	1
9	156010	RIVET, BLIND .156 X 1/2 GRIP	4
10	168211	DECAL, 342 REFLECTIVE	2
11	3-573-010038	DECAL, CAUTION	1
12	3-573-010057	DECAL, INSTRUCTION CONTROLS	1
13	171220	DECAL, OPERATION 1 AXLE TB	1
14	3-573-010189	DECAL, TIRE CHANGING PROCEDURE	1
15	3-573-010210	DECAL, TORQUE SPEC 8-10 STUD HUB	1
16	3-573-010377	DECAL, REFLEXITE TAPE RED/WHITE	AR
17	105822	DECAL, HYDRAULIC COUPLER	1
18	103055	DECAL, ENERGY BUMPER CERT.	1
19	103056	DECAL, ENERGY BUMPER WARNING	1
20	3-573-010031	DECAL, BUMPER	1
21	142553	DECAL, GREASE TRAILER	1
22	171221	DECAL, DANGER ELECTROCUTION	1

Eastern Wrecker Sales Inc. - www.easternwrecker.com - 919-553-4038

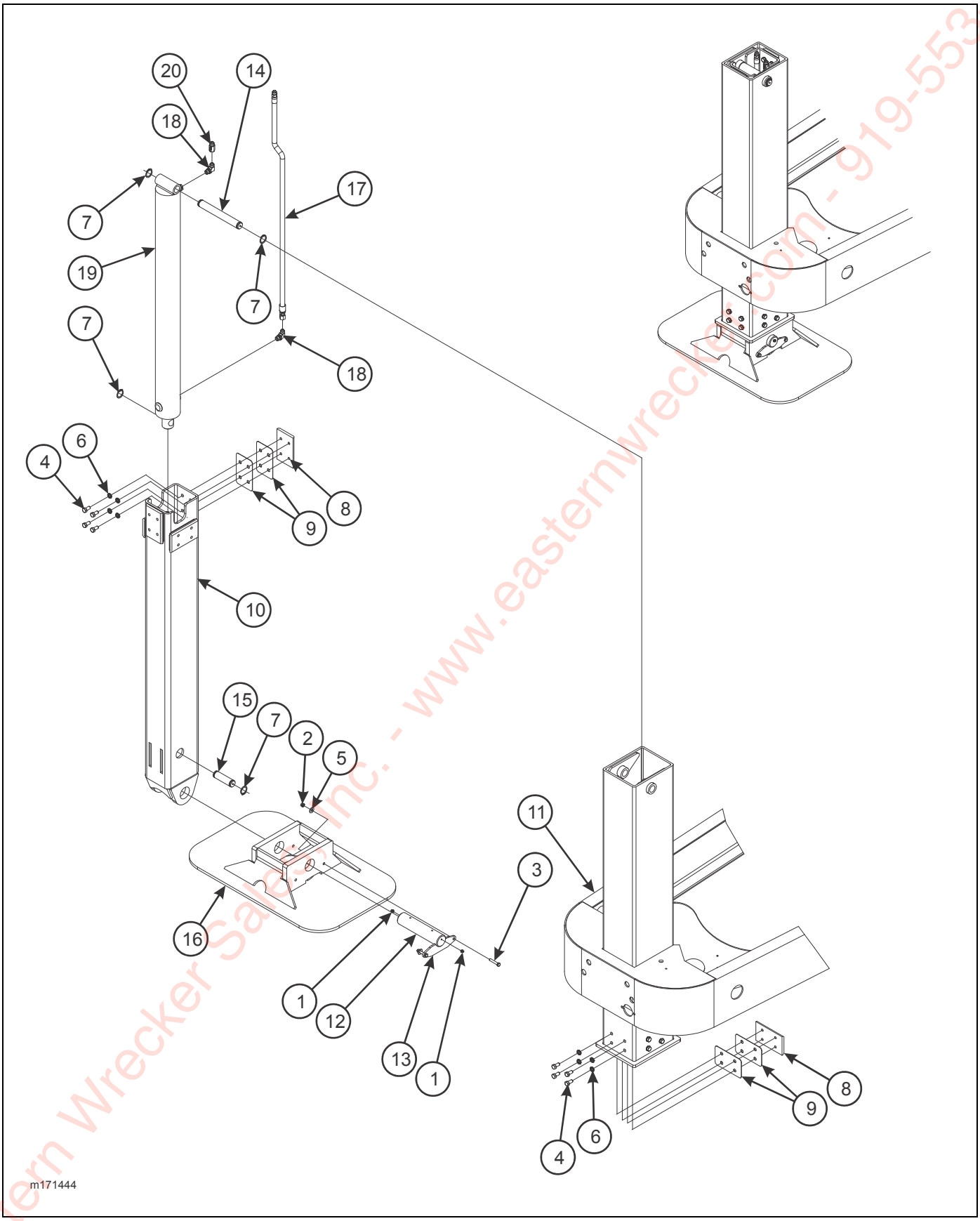

Figure 2-4: Fifth Wheel Hitch Assembly, 2”

Eastern Wrecker Sales, Inc. - www.easternwrecker.com - 919-553-4038

FIFTH WHEEL HITCH ASSEMBLY, 2”

ITEM	PART NO.	DESCRIPTION	QTY.
	171444	FIFTH WHEEL HITCH ASSEMBLY, 2”	
1	1-298-010001-1	FITTING, GREASE 1/4-28	1
2	1-512-010005-05	NUT, HEX LOCK 3/8-16 GRB	4
3	1-654-010051-09	SCREW, HEX HEAD CAP 3/8-16 X 2 GR5	6
4	1-654-010055-01	SCREW, HEX HEAD CAP 1/2-13 X 1 GR5	6
5	1-861-010032-11	WASHER, FLAT 3/8W	8
6	1-861-010034-13	WASHER, SPLIT LOCK 1/2	1
7	120454	RING, RETAINING 1.25 HD	4
8	143916	PLATE, SLIDE	8
9	151533	SHIM, HITCH SLIDE	16
10	170430	HITCH, INNER 5TH WHL WELDMENT	1
11	170437	FRAME WELDMENT, 342 G/N	REF
12	170438	PIN, PIVOT 5TH WHEEL	1
13	170439	ANCHOR PIN, PIVOT 5TH WHEEL	1
14	170441	PIN, CYLINDER BUTT HITCH	1
15	170442	PIN, CYLINDER ROD HITCH	1
16	171440	HITCH WELDMENT, 5TH WHEEL	1
17	171443	HOSE ASSEMBLY, 1/2 X 48	1
18	2062-8-8S	ADAPTER, 90	2
19	3-242-010099	CYLINDER, HYDRAULIC TILT (SEE PAGE 2-10)	1
20	3-846-010154	VALVE, RESTRICTOR	1

Eastern Wrecker Sales, Inc. - www.easternwrecker.com - 919-553-4038

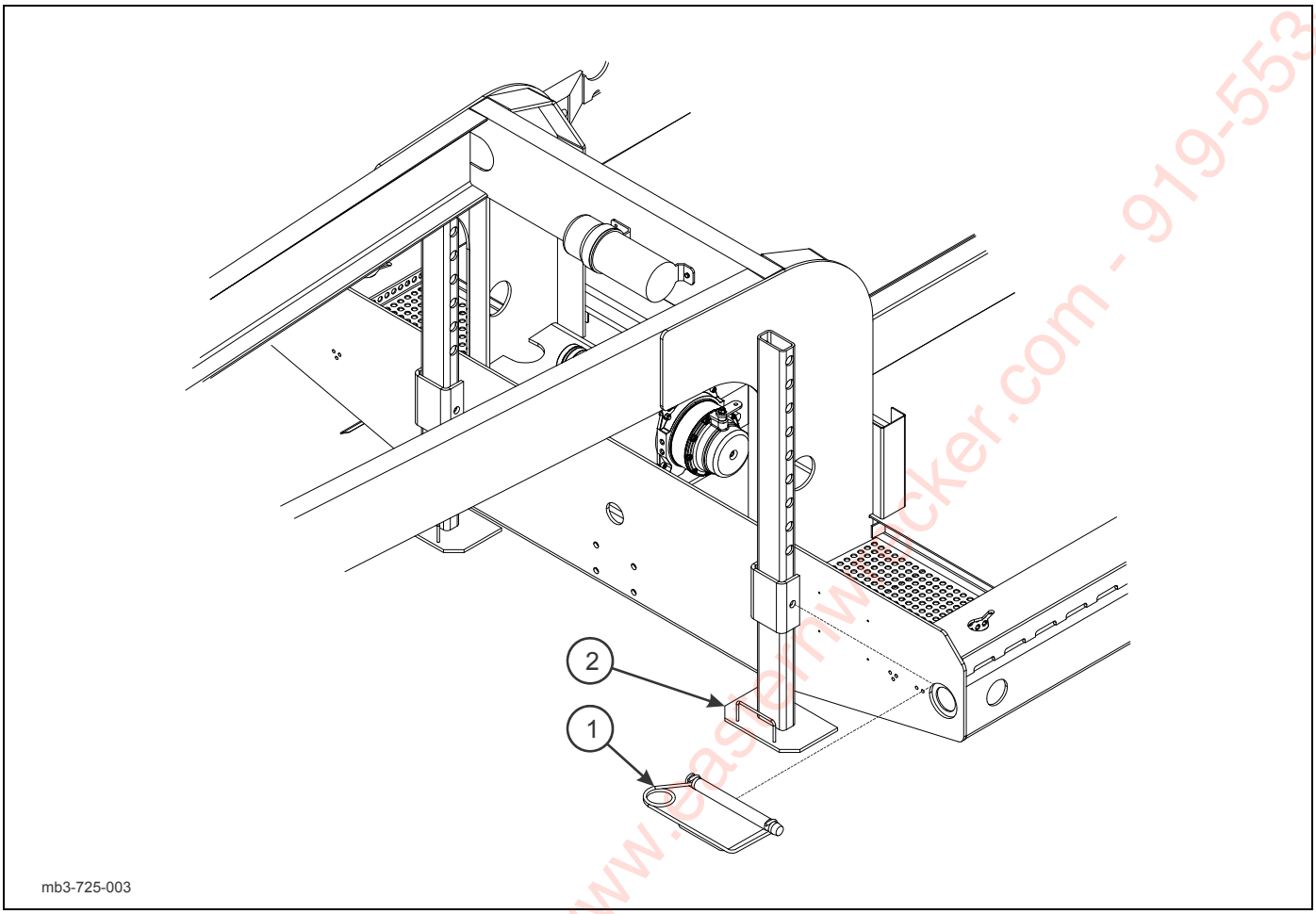

Figure 2-5: Mechanical Parking Stands

MECHANICAL PARKING STANDS

ITEM	PART NO.	DESCRIPTION	QTY.
	B3-725-003	MECHANICAL PARKING STANDS	
1	346SL	LOCK HITCH PIN	2
2	3-311-010147	PARKING STAND, LEFT	2

Eastern Wrecker Sales Inc. www.easternwrecker.com - 919-553-4038

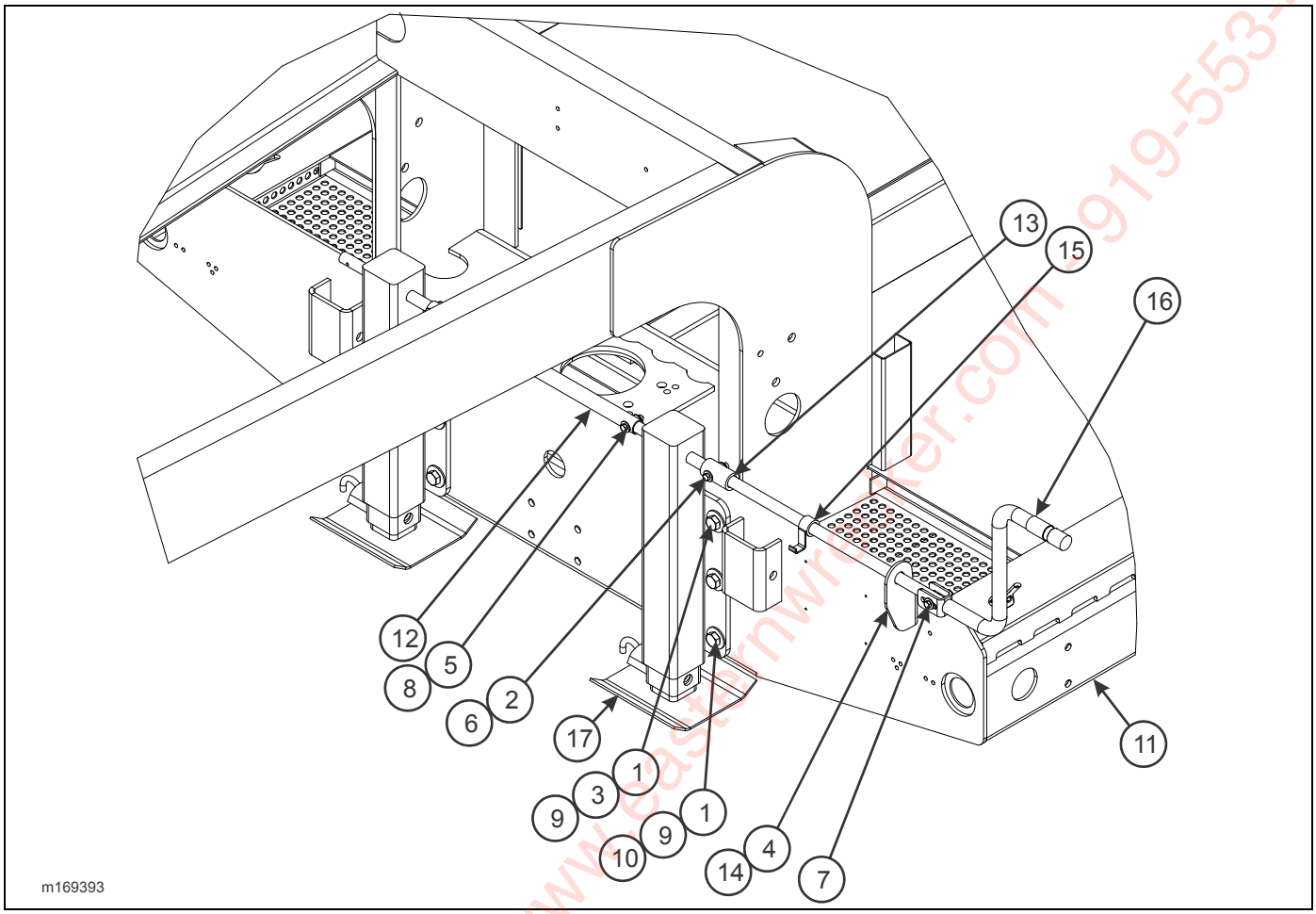

Figure 2-6: Landing Gear Assembly, 2 Drop Leg

LANDING GEAR ASSEMBLY, 2 DROP LEG

ITEM	PART NO.	DESCRIPTION	QTY.
	169393	LANDING GEAR ASSEMBLY 2 DROP LEG	
1	1-512-010002-15	NUT, HEX LOCK 3/4-10 GRC	12
2	1-512-010005-05	NUT, HEX LOCK 3/8-16 GRB	6
3	1-654-010032-09	SCREW, HEX HEAD CAP 3/4-10 X 3 GR8	2
4	1-654-010051-07	SCREW, HEX HEAD CAP 3/8-16 X 1-1/2 GR5	2
5	1-654-010051-09	SCREW, HEX HEAD CAP 3/8-16 X 2 GR5	2
6	1-654-010051-10	SCREW, HEX HEAD CAP 3/8-16 X 2-1/4 GR5	1
7	1-654-010051-11	SCREW, HEX HEAD CAP 3/8-16 X 2-1/2 GR5	1
8	1-861-010032-11	WASHER, FLAT 3/8W	8
9	1-861-010032-21	WASHER, FLAT 3/4W	4
10	100941	SCREW, HEX HEAD CAP 3/4-10 X 2-1/4 GR8	4
11	-----	FRAME WELDMENT, 342 G/N	REF
12	169384	CROSS-SHAFT LANDING GEAR	1
13	169385	TUBE WELDMENT, HANDLE EXTENSION	1
14	169387	PLATE, HANDLE BRACE	1
15	3-187-010019	CLIP WELDMENT, JACK HANDLE	1
16	3-423-010035	HANDLE	REF
17	3-423-010042	JACK, 12,000 LB. DROPLEG WELDMENT	2

Eastern Wrecker Sales Inc www.easternwrecker.com 919-553-4038

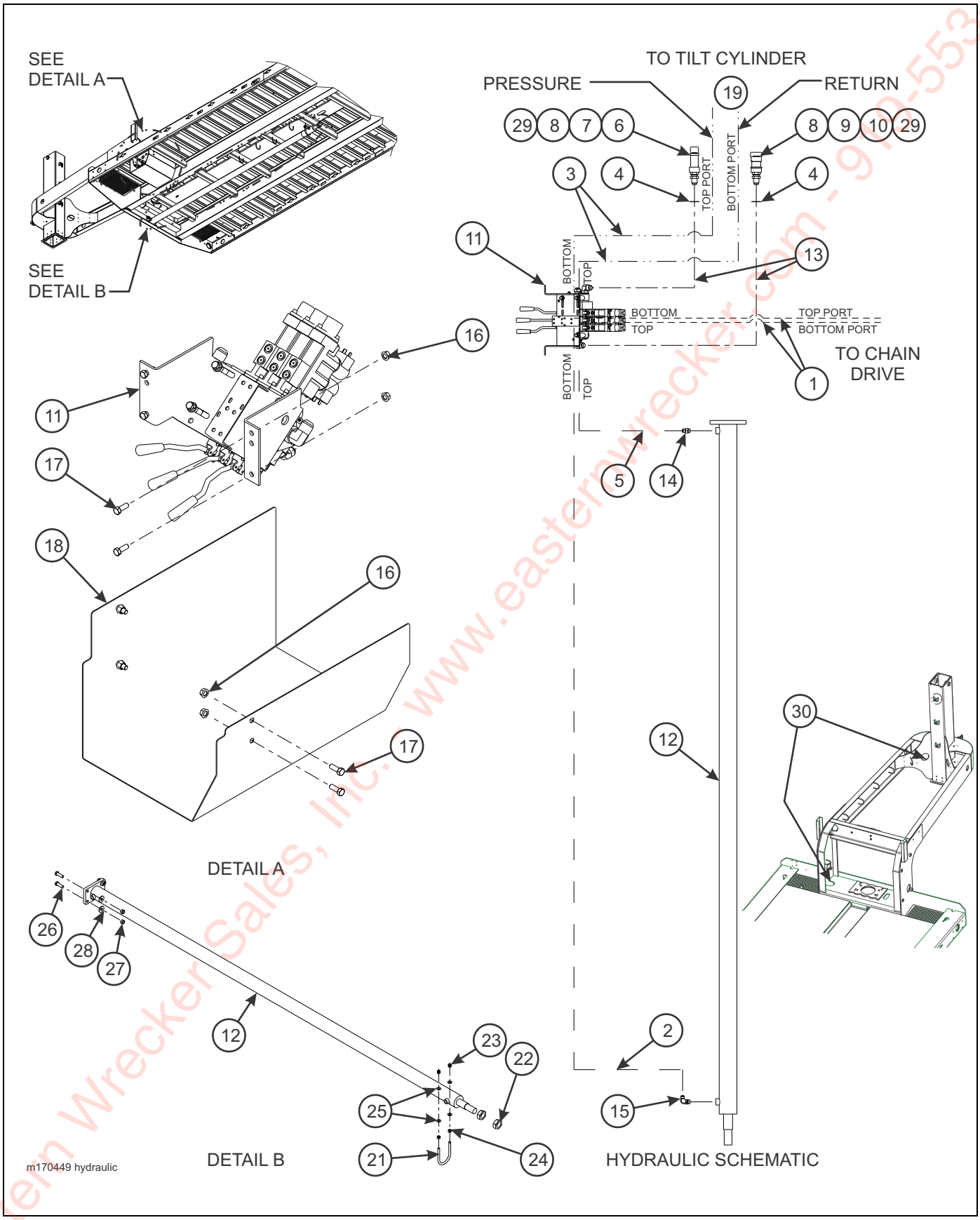

Figure 2-7: Hydraulic System

Eastern Wrecker Sales, Inc. - www.easternwrecker.com - 910-553-4038

HYDRAULIC SYSTEM

ITEM	PART NO.	DESCRIPTION	QTY.
	170449	HYDRAULIC ELECTRICAL AIR	REF
1	1-397-010301114	HOSE ASSEMBLY 1/2 X 114	1
2	1-397-010301124	HOSE ASSEMBLY 1/2 X 124	2
3	1-397-010301238	HOSE ASSEMBLY 1/2 X 238	2
4	1-861-010059-21	WASHER, LOCKING INT TOOTH 1-1/8	2
5	121003	HOSE ASSEMBLY 1/2 X 80	1
6	105479	COUPLER, FLAT FACE MALE	1
7	105481	COUPLER, DUST CAP MALE	1
8	105483	ADAPTER, BULKHEAD 12JIC-12ORING	2
9	105480	COUPLER, FLAT FACE FEMALE	1
10	105482	COUPLER, DUST CAP FEMALE	1
11	148242	VALVE ASSEMBLY 3 SPOOL (SEE PAGE 2-15)	1
12	122285	CYLINDER, HYDRAULIC 3 X 108 (30') (SEE PAGE 2-11)	1
	171442	CYLINDER, HYDRAULIC 3 X 117 (31-1/2') (SEE PAGE 2-13)	1
13	171445	HOSE ASSEMBLY 3/4 X 204	2
14	202702-8-8S	ADAPTER	2
15	2062-8-8S	ADAPTER, 90	2
16	1-510-010001	NUT, FLANGE LOCK 3/8-16	8
17	1-654-010051-05	SCREW, HEX HEAD CAP 3/8-16 X 1 GR5	8
18	168931	SHIELD, CONTROL VALVE	1
19	3-242-010099	CYLINDER, HYDRAULIC 4X42 (SEE PAGE 2-10)	REF
20	1-796-010003-02	TY-WRAP (STD LOAD ANGLE) (NOT SHOWN)	12
21	3-102-010027	U-BOLT, BALL HITCH	1
22	1-511-010001-14	NUT, HEX JAM 1-1/2-12	2
23	1-512-010005-09	NUT, HEX LOCK 1/2-13 GRB	2
24	1-512-010007-09	NUT, HEX 1/2-13 GRB	2
25	1-861-010032-14	WASHER, FLAT 1/2N	4
26	1-654-010059-05	SCREW, HEX HEAD CAP 5/8-11 X 2 GR5	4
27	1-512-010007-11	NUT, HEX 5/8-11 GRB	4
28	1-861-010032-19	WASHER, FLAT 5/8W	4
29	169365	SPACER, HYDRAULIC COUPLER	2
30	1-822-010001	TRIM, 1350 3/8 BLK FINE PEBBLE	5

Eastern Wrecker Sales, Inc. - www.easternwrecker.com - 919-553-4038

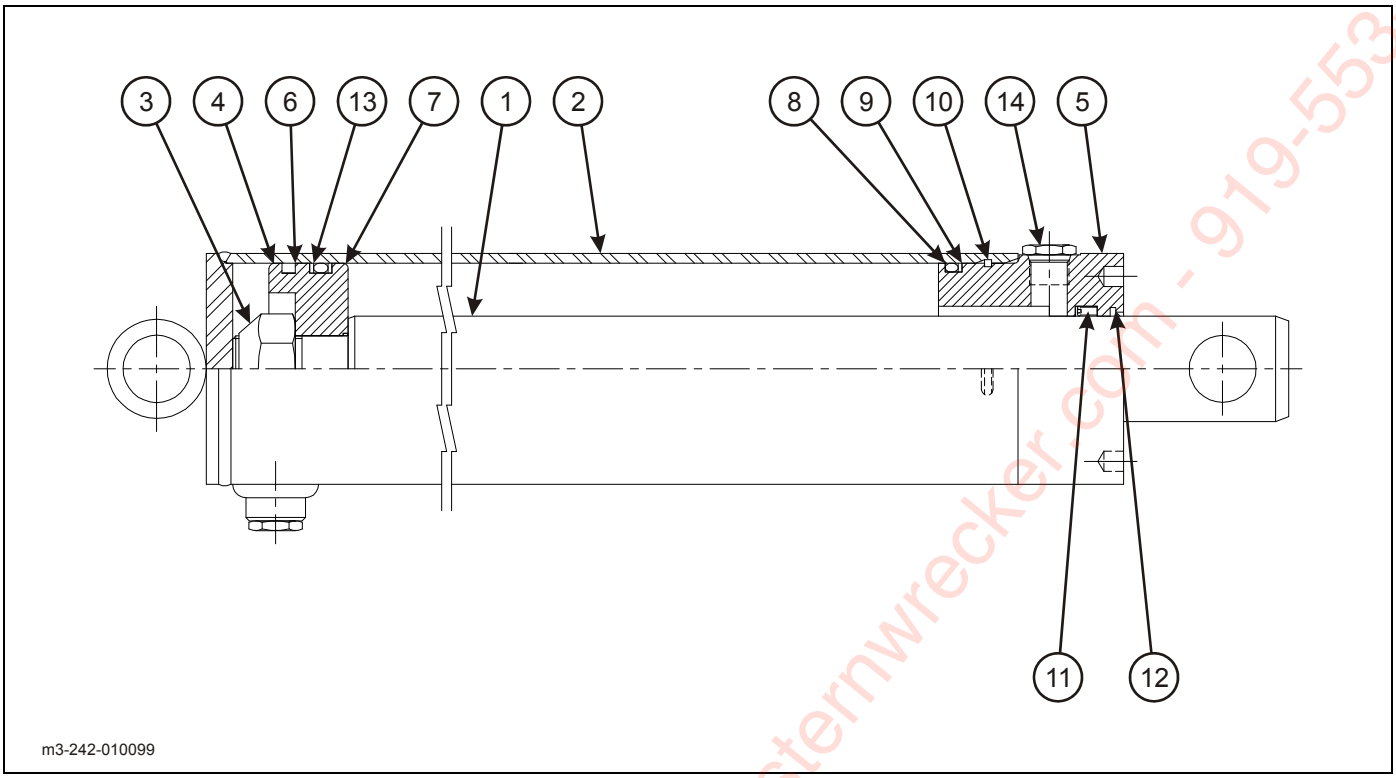

Figure 2-8: Trailer Tilt Cylinder Assembly

TRAILER TILT CYLINDER

ITEM	PART NO.	DESCRIPTION	QTY.
	3-242-010099	CYLINDER, HYDRAULIC 4"X 42" (TILT CYLINDER)	
1	011100550	PISTON ROD	1
2	-----	BUTT AND TUBE ASSEMBLY	1
3	-----	LOCKNUT (1-1/4-12)	1
4	-----	PISTON	1
5	081900295	GLAND	1
6	-----	PISTON RING	
7	-----	O-RING	2
8	-----	O-RING	1
9	-----	BU-WASHER	2
10	-----	RETAINER SQUARE WIRE	1
11	-----	U-CUP	1
12	-----	WIPER	1
13	-----	BU-WASHER	1
14	-----	SAE ORB PLUG	2
*15	-----	INSTALLATION RING (NOT SHOWN)	1
*16	-----	O-RING (NOT SHOWN)	1
*17	-----	BU-WASHER (NOT SHOWN)	2
*18	-----	SNAP RING (NOT SHOWN)	1
	163800	PACKING KIT (INCL ITEMS 6-13, 15-18)	

* INCLUDED W/ REPLACEMENT PACKING KIT ONLY

Eastern Wrecker Sales, Inc. - www.easternwrecker.com - 919-553-4038

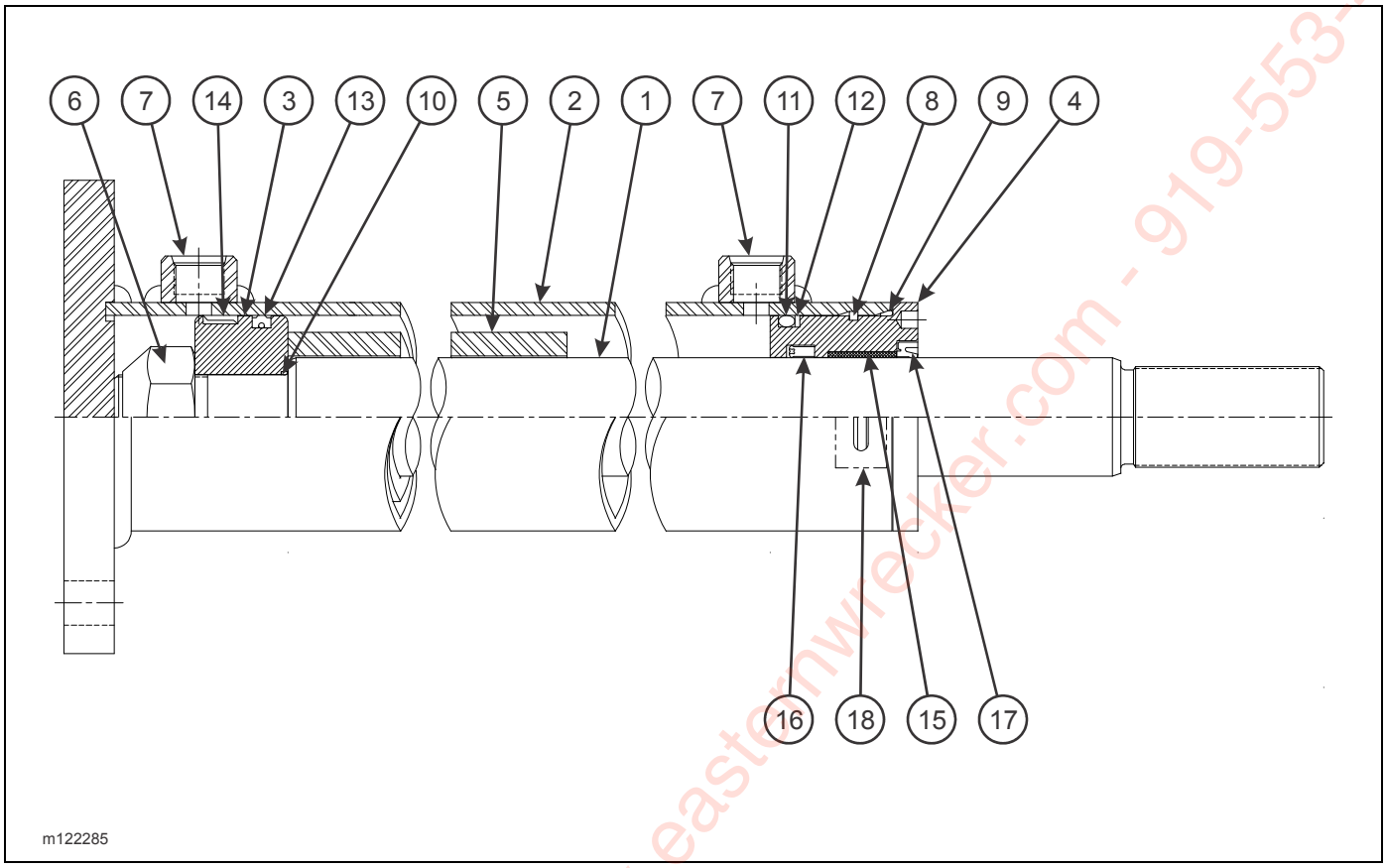

Figure 2-9: 3 X 108 Hydraulic Cylinder

3 X 108 HYDRAULIC CYLINDER

ITEM	PART NO.	DESCRIPTION	QTY.
	122285	CYLINDER, HYDRAULIC 3" X 108"	
1	131096	PISTON ROD	1
2	-----	BUTT AND TUBE ASSEMBLY	1
3	-----	PISTON	1
4	131098	GLAND	1
5	-----	SPACER	1
6	-----	LOCKNUT (1-1/4-12)	1
7	-----	PORT PLUGS	2
8	-----	SQ. RETAINING RING	1
9	-----	O-RING	1
10	-----	O-RING	1
11	-----	O-RING	1
12	-----	BU-WASHER	1
13	-----	CROWN SEAL	1
14	-----	BEARING RING	1
15	-----	DX BUSHING	1
16	-----	U-CUP	1
17	-----	WIPER	1
18	-----	SQUARE WIRE TAPE	1
19	-----	INSTALLATION RING (PACKING KIT ONLY)	1
	122357	PACKING KIT (INCL ITEMS 8-17, 19)	

Eastern Wrecker Sales, Inc. - www.easternwrecker.com - 919-553-4038

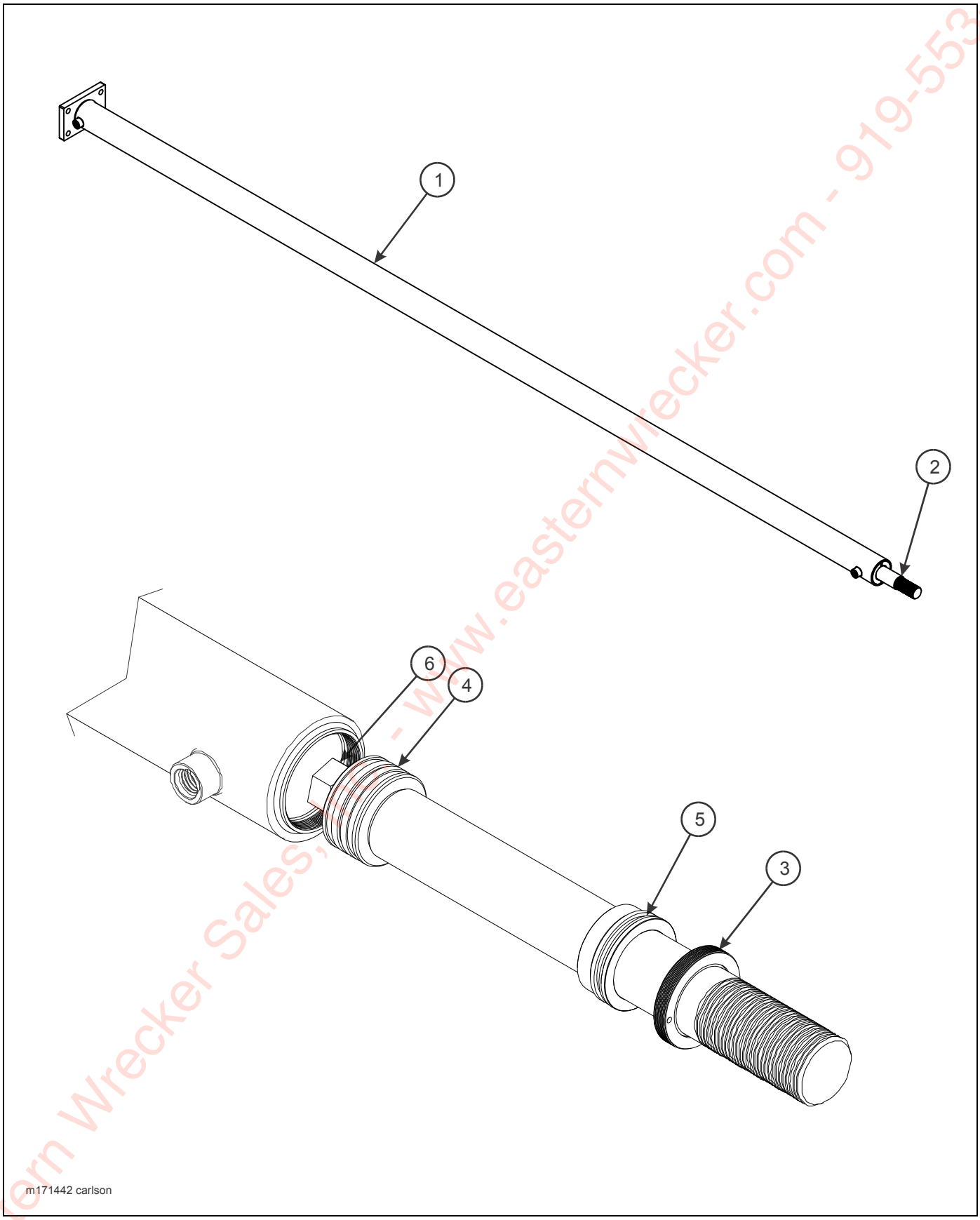

Figure 2-10: 3 X 117 Hydraulic Cylinder (Carlson)

Eastern Wrecker Sales, Inc. - www.easternwrecker.com - 919-553-4038

3 X 117 HYDRAULIC CYLINDER (CARLSON)

ITEM	PART NO.	DESCRIPTION	QTY.
	171442	CYLINDER, HYDRAULIC 3" X 117"	
1	172046	3” BARREL ASSEMBLY	1
2	172047	1-3/4” ROD	1
3	172048	3” X 3/4” RETAINER	1
4	172049	3” WR/TFE PISTON	1
5	172050	3” POLY-U PISTON	1
6	157129	1-1/4” LOCK NUT	1
7	172051	5306 SEAL KIT	1

Eastern Wrecker Sales, Inc. - www.easternwrecker.com - 919-553-4038

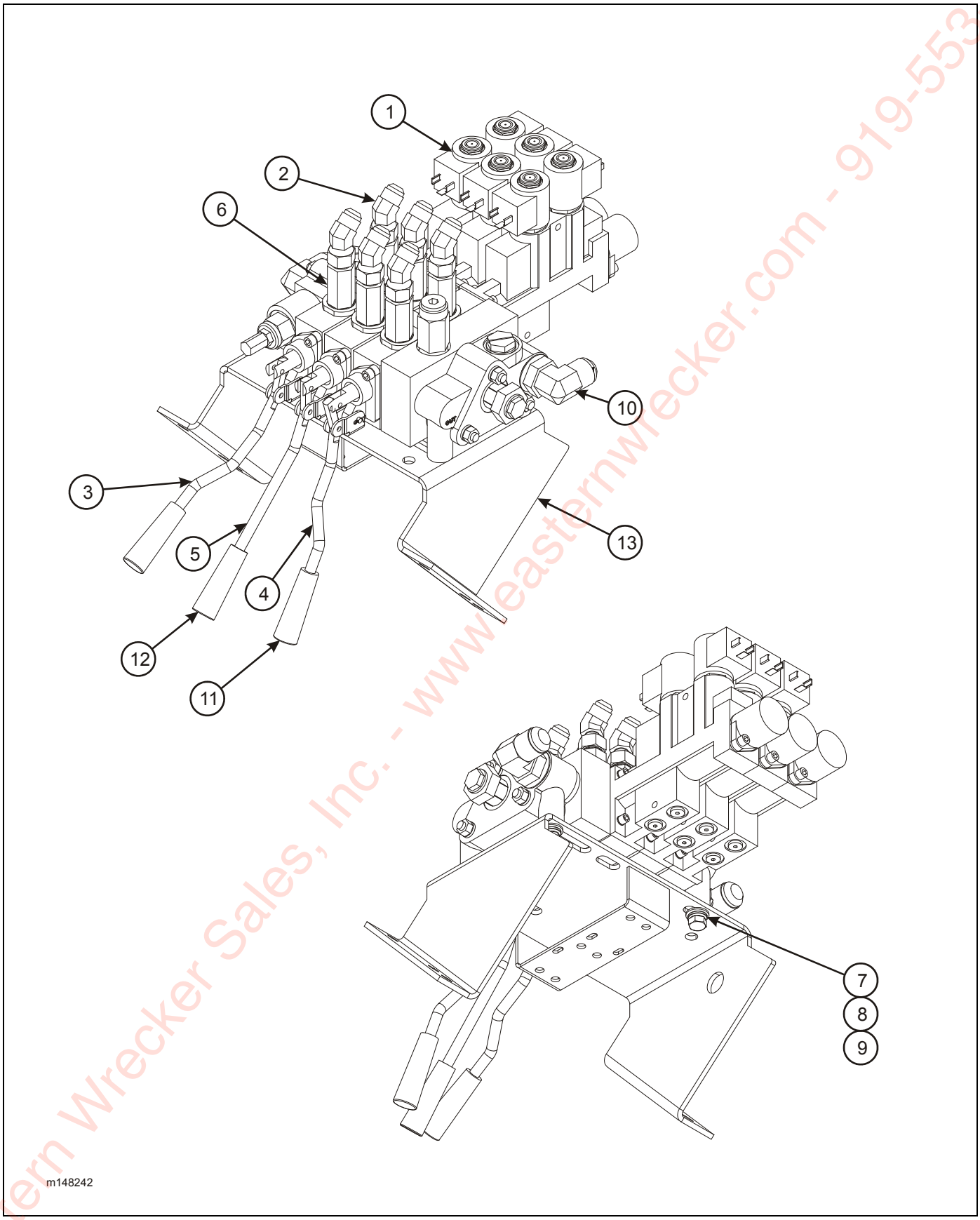

Figure 2-11: Valve Assembly, Three Spool

Eastern Wrecker Sales, Inc. - www.easternwrecker.com - 919-553-4038

VALVE ASSEMBLY, THREE SPOOL

ITEM	PART NO.	DESCRIPTION	QTY.
	148242	VALVE ASSEMBLY	
1	148240	VALVE, 3 STACK 2ND MOTOR SOL (SEE PAGE 2-17)	1
2	121031	ADAPTER 45	6
3	136377	VALVE HANDLE, RH FORMED	1
4	136378	VALVE HANDLE, LH FORMED	1
5	139519	VALVE HANDLE, CENTER FORMED	1
6	140893	ADAPTER, STR	6
7	1-654-010051-05	SCREW, HEX HEAD CAP 3/8-16 X 1 GR5	3
8	1-861-010032-10	WASHER, FLAT 3/8N	3
9	1-861-010034-11	WASHER, SPLIT LOCK 3/8	3
10	2062-10-12S	ADAPTER 90	2
11	3-360-010072	HANDLE, PLASTIC BLACK	2
12	3-360-010090	HANDLE, PLASTIC RED	1
13	3-482-010575	MOUNT WELDMENT, VALVE	1

Eastern Wrecker Sales, Inc. - www.easternwrecker.com - 919-553-4038

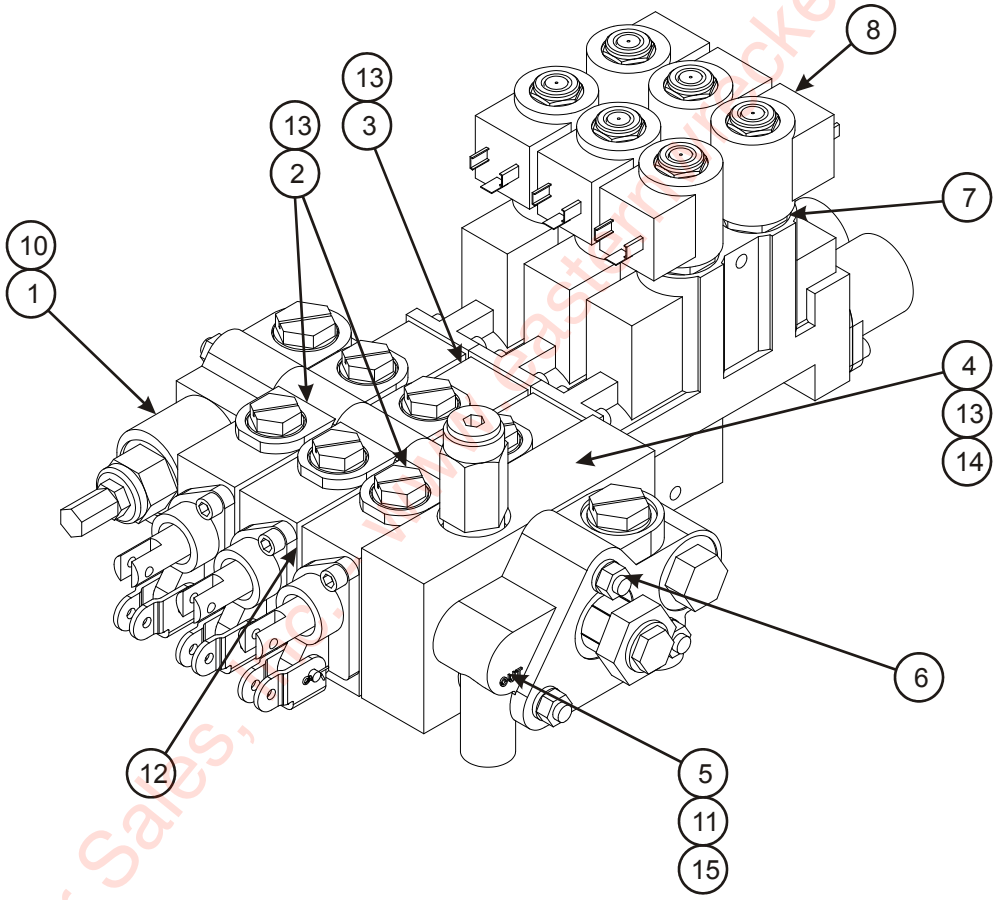

m148240

Figure 2-12: Three Spool Valve

Eastern Wrecker Sales, Inc. www.EasternWrecker.com - 919-553-4038

THREE STACK VALVE

ITEM	PART NO.	DESCRIPTION	QTY.
	148240	THREE STACK VALVE	
1	149526	INLET SECTION KIT	
2	149527	VALVE SECTION KIT	
3	149528	VALVE SECTION KIT	
4	149529	VALVE SECTION KIT	
5	142483	OUTLET SECTION KIT	
6	149530	TIEROD KIT	
7	142484	COIL	
8	142485	CARTRIDGE	
9	142486	COIL CARTRIDGE ASSEMBLY (INCL ITEMS 7 & 8)	
10	660580002	SEAL KIT FOR INLET SECTION	
11	660580003	SEAL KIT FOR OUTLET SECTION	
12	660580004	O-RING SEAL KIT FOR BETWEEN SECTIONS	
13	660580005	SEAL KIT FOR SOLENOID WORK SECTION	
14	149030	PRESSURE REDUCING CARTRIDGE IN UTILITY SECTION (149529)	
15	151823	PRESSURE BUILD UP CARTRIDGE IN OUTLET SECTION (142483)	

Eastern Wrecker Sales, Inc. - www.easternwrecker.com - 919-553-4038

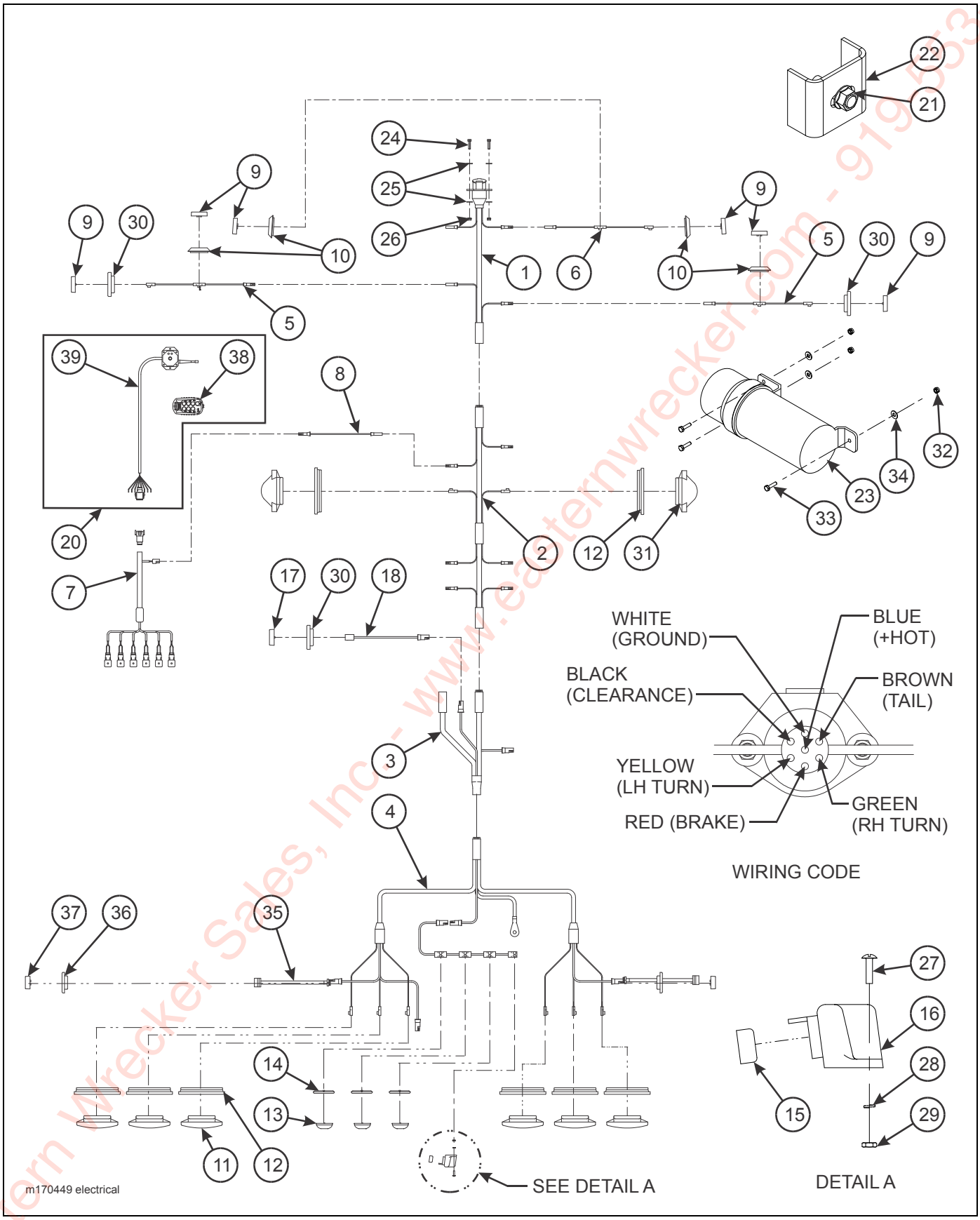

Figure 2-13: Electrical System

Eastern Wrecker Sales, Inc. - www.easternwrecker.com - 919-553-4038

ELECTRICAL SYSTEM

ITEM	PART NO.	DESCRIPTION	QTY.
	170449	HYDRAULIC ELECTRICAL AIR	REF
	168183	UNDERCARRIAGE ASSEMBLY	REF
1	170422	HARNESS, 7 COND. RECEPTACLE MAIN	1
2	170406	HARNESS, MAIN W/ CTR BREAK-OUT	1
3	143103	HARNESS, E-CHAIN	1
4	143104	HARNESS, BUMPER	1
5	143105	HARNESS, MARKER FRONT CORNER	2
6	143106	HARNESS, MARKER FRONT BED	1
7	140083	HARNESS ASSEMBLY, KAR-TECH	1
8	3-368-010252	HARNESS ASSEMBLY, BULKHEAD LIGHT EXT	1
9	143109	LIGHT, YELLOW LED 2.5 CL/MARKER	6
10	143110	GROMMET, 2.5 SURFACE MOUNT	4
11	143113	LIGHT, RED LED OVAL STT	6
12	143114	GROMMET, OVAL	2
13	143115	LIGHT, RED LED RECTANGLE CLEARANCE	3
14	143116	GROMMET, RECTANGLE	3
15	143117	LIGHT, CLEAR LED LICENSE	1
16	143118	BRACKET, LIGHT LICENSE	1
17	143119	LIGHT, YELLOW LED ABS	1
18	143120	HARNESS, ABS LAMP	1
19	143122	CLAMP, HARNESS (NOT SHOWN)	3
20	168648	RECEIVER/ TRANSMITTER MACRO KARTEK SL AX (INCL ITEMS 38-41)	1
21	1-510-010001	NUT, FLANGE 3/8-16	AR
22	2-181-010001	CLAMP, HOSE	AR
23	150076	MANUAL HOLDER	1
24	1-654-010049-06	SCREW, HEX HEAD CAP 5/16-18 X 1 GR5	2
25	1-861-010032-09	WASHER, FLAT 5/16W	4
26	1-512-010005-03	NUT, HEX LOCK 5/16-18 GRB	2
27	1-656-010003051	SCREW, RD HEAD SQ NECK 10-24 X 3/4	2
28	1-861-010034-07	WASHER, FLAT #10	2
29	1-512-010007-03	NUT, HEX LOCK 10-24	2
30	143111	GROMMET, 2.5 RECESSED MOUNT	3
31	169410	LIGHT, YELLOW MID-TURN	2
32	1-512-010005-01	NUT, HEX LOCK 1/4-20 GRB	3
33	1-654-010047-06	SCREW, HEX HEAD CAP 1/4-20 X 1 GR5	3
34	1-861-010032-07	WASHER, FLAT 1/4	3
35	144609	MARKER LAMP PIGTAIL HARNESS	2
36	153100	LIGHT, RED LED 2 CL/MARKER	2
37	153102	GROMMET, MOUNT 2-5/16	2
38	168975	MACRO TRANSMITTER W/ DECAL	1
39	143126	MINI AND MACRO RECEIVER, 6 FUNCTION W/ TEACH BUTTON	1
40	168976	CAR CHARGER 12V TO MICRO USB (NOT SHOWN)	1
41	168982	WALL CHARGER 120V TO MICRO USB (NOT SHOWN)	1

Eastern Wrecker Sales, Inc. - www.easternwrecker.com - 919-553-4038

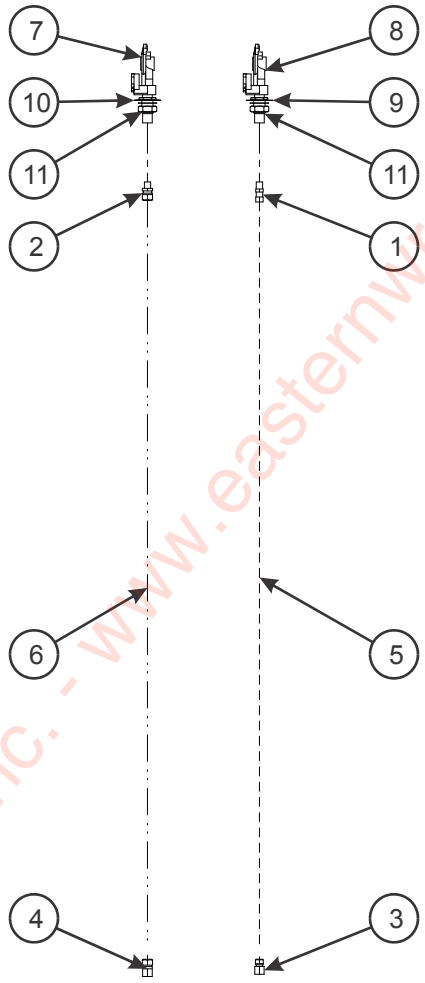

m170449 air

Figure 2-14: Air System

Eastern Wrecker Sales, Inc. - www.easternwrecker.com - 919-553-4038

AIR SYSTEM

ITEM	PART NO.	DESCRIPTION	QTY.
	170449	HYDRAULIC ELECTRICAL AIR	REF
1	1-297-010007-11	FITTING, AIR	1
2	1-297-010007-14	FITTING, AIR	1
3	1-297-010012-12	FITTING, AIR	1
4	1-297-010012-15	FITTING, AIR	1
5	1-833-010002	NYLON TUBING, 3/8 OD	AR
6	1-833-010003	TUBING NYLON 1/2	AR
7	108801	GLADHAND RED AIR	1
8	108802	GLADHAND BLUE AIR	1
9	55B61-7	TAG, SERVICE LINE	1
10	55B61-6	TAG, EMERGENCY LINE	1
11	55B61	FRAME UNION	2

Eastern Wrecker Sales, Inc. - www.easternwrecker.com - 919-553-4038

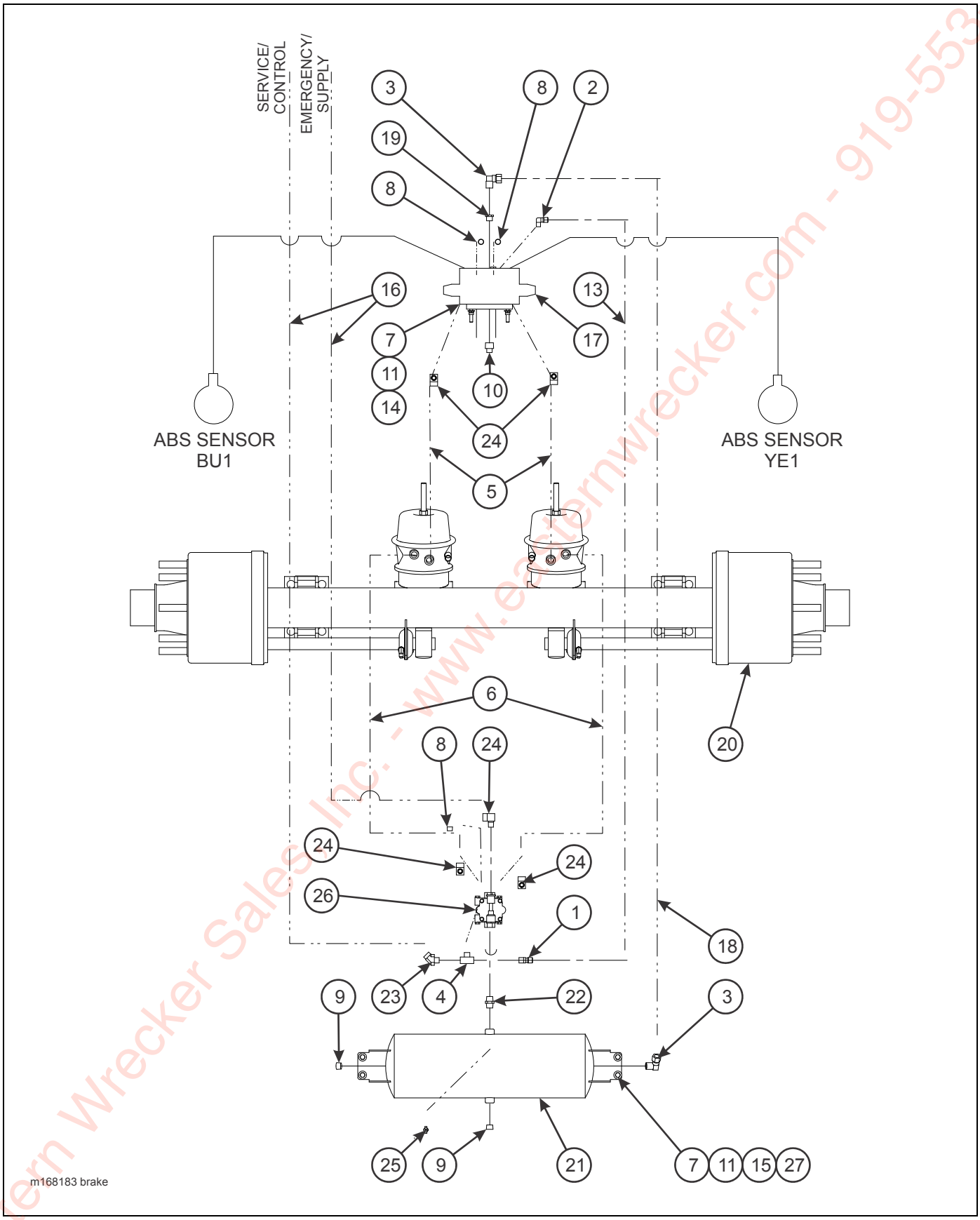

Figure 2-15: Air Brake System, Single Axle

Eastern Wrecker Sales Inc. - www.easternwrecker.com - 919-553-4038

AIR BRAKE SYSTEM, SINGLE AXLE

ITEM	PART NO.	DESCRIPTION	QTY.
	168183	BRAKE W/ ABS SINGLE (STD LOAD)	
1	1-297-010007-12	FITTING AIR	1
2	1-297-010008-18	FITTING AIR 90	1
3	1-297-010008-26	FITTING AIR 90	2
4	1-297-010017-03	FITTING, BRASS TEE	1
5	1-384-010038024	HOSE AIR 3/8 X 24	2
6	1-384-010038038	HOSE AIR 3/8 X 38"	2
7	1-512-010005-05	NUT, HEX LOCK 3/8-16 GRB	4
8	1-560-010002-03	PLUG PIPE 3/8	3
9	1-560-010002-04	PLUG PIPE 1/2	2
10	1-560-010002-05	PLUG PIPE 3/4-14	1
11	1-654-010051-08	SCREW, HEX HEAD CAP 3/8-16 X 1-3/4 GR5	4
12	1-796-010003-01	TIE STRAP PLASTIC (NOT SHOWN)	10
13	1-833-010002	TUBING NYLON 3/8	AR
14	1-861-010032-10	WASHER, FLAT 3/8N	2
15	1-861-010032-11	WASHER, FLAT 3/8W	8
16	100948	HOSE, AIR 3/8 X 174	2
17	114585	BRAKE KIT ROCKWELL ABS (SEE PAGE 2-25)	1
18	117304	TUBING, NYLON 5/8	AR
19	118-2659-9	BUSHING 1/2 X 3/4	2
20	131874	AXLE, 15K 78 TRACK AIR BRAKE (SEE PAGE 2-31)	1
21	167853	TANK, AIR 8 X 32	1
22	2083-8-8S	NIPPLE, HEX	1
23	2088-6-6S	ADAPTER 45	1
24	2089-6-6S	ADAPTER 90	1
25	56D4	COCK DRAIN AIR TANK	1
26	758-181	VALVE TASK 4 PORT	1
27	805-2	STEP BUSHING	8

Eastern Wrecker Sales, Inc. - www.easternwrecker.com - 919-553-4038

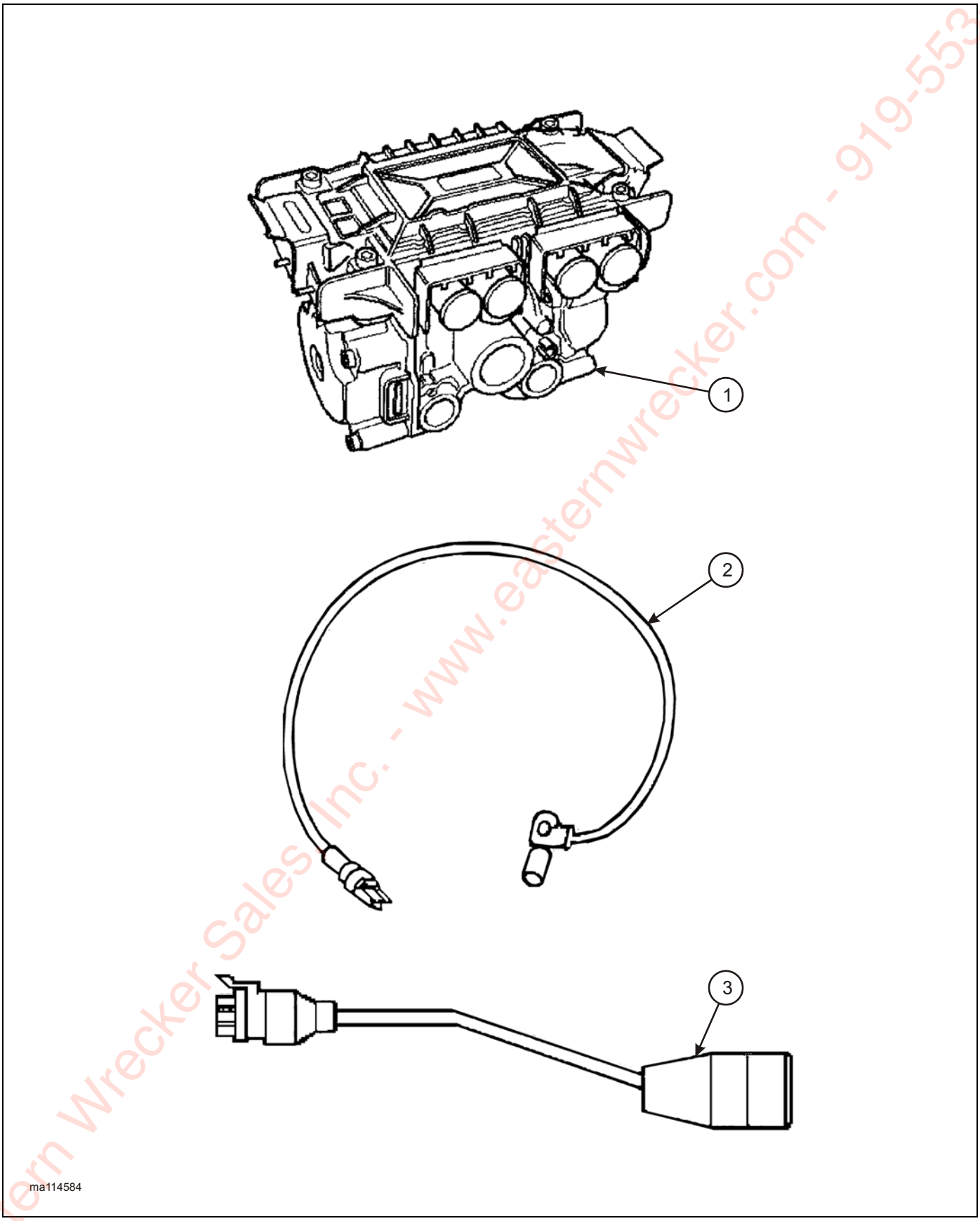

Figure 2-16: Brake Kit, Meritor WABCO (Rockwell) ABS

Eastern Wrecker Sales Inc. - www.easternwrecker.com - 919-553-4038

BRAKE KIT, ABS

ITEM	PART NO.	DESCRIPTION	QTY.
	114585	BRAKE KIT, ROCKWELL ABS, 2S/1M (SINGLE AXLE)	
1	114589	ECU/VALVE ASSEMBLY 2S/1M (114585)	1
2	101848	SENSOR EXTENSION CABLE	4,2*
3	147464	POWER CABLE	1

*THE FIRST QUANTITY LISTED IS FOR P/N 114584 (TANDEM AXLE). THE SECOND QUANTITY LISTED IS FOR P/N 114585 (SINGLE AXLE)

Eastern Wrecker Sales, Inc. - www.easternwrecker.com - 919-553-4038

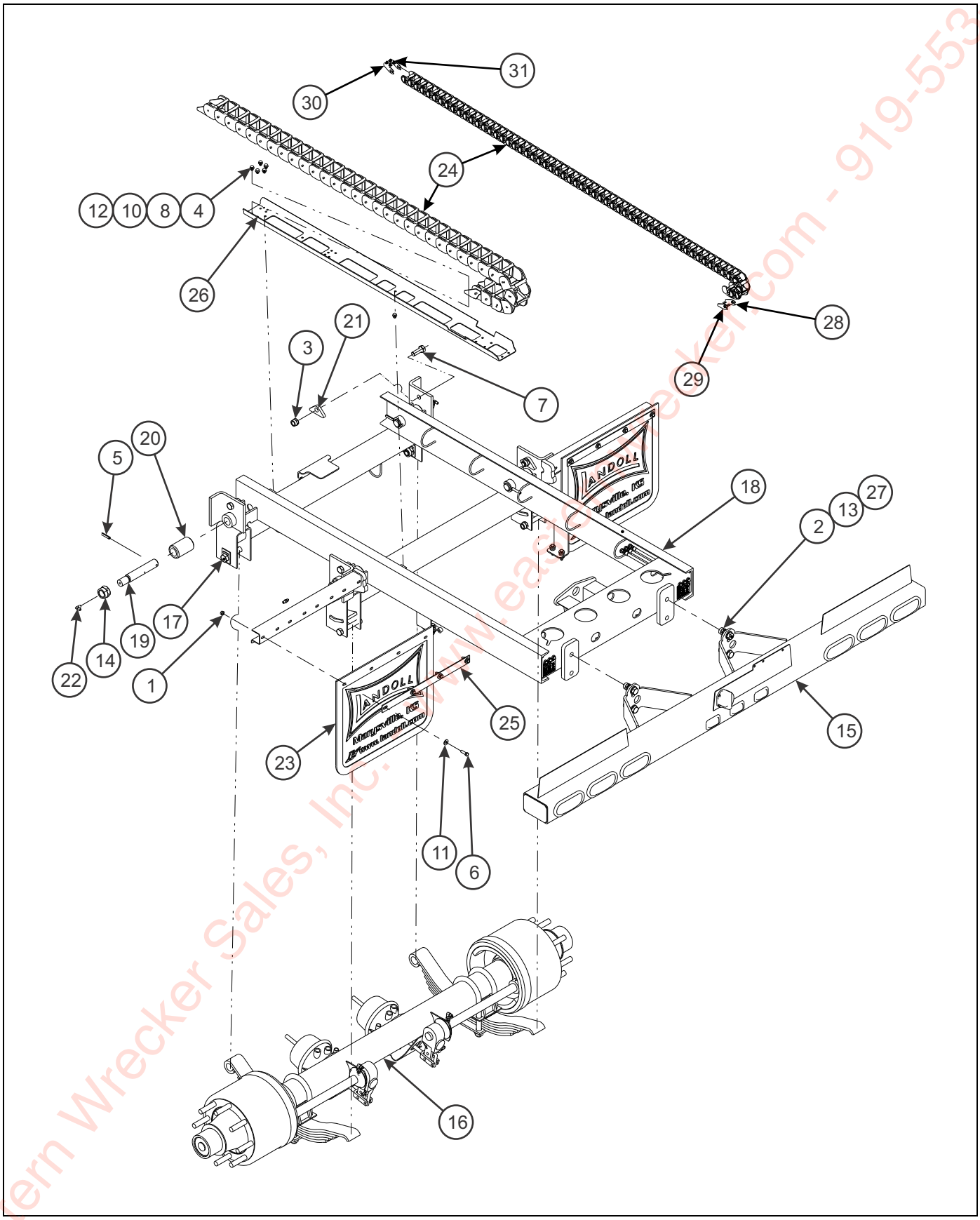

Figure 2-17: Undercarriage Assembly - Spring Ride Single Axle

Eastern Wrecker Sales, Inc. www.easternwrecker.com - 919-553-4038

UNDERCARRIAGE ASSEMBLY - SPRING RIDE

ITEM	PART NO.	DESCRIPTION	QTY.
	168183	UNDERCARRIAGE ASSEMBLY	
1	1-510-010001	NUT FLANGE LOCK 3/8-16	10
2	1-512-010002-15	NUT, HEX LOCK 3/4-10 GRC	4
3	1-512-010005-15	NUT, HEX LOCK 3/4-10 GRB	4
4	1-512-010007-05	NUT HEX 1/4-20 GRB	11
5	1-647-010004255	ROLL PIN, SLOTTED 3/8 X 2	4
6	1-654-010051-06	SCREW, HEX HEAD CAP 3/8-16 X 1-1/4 GR5	8
7	1-654-010061-05	SCREW, HEX HEAD CAP 3/4-10 X 2 GR5	4
8	1-654-010158-1	SCREW RD HEAD SQ NECK 1/4-20 X 3/4 GR5	11
9	1-796-010004-02	TIE STRAP, PLASTIC (NOT SHOWN)	AR
10	1-861-010032-07	WASHER FLAT 1/4	11
11	1-861-010032-11	WASHER FLAT 3/8	8
12	1-861-010034-09	WASHER SPLIT LOCK 1/4	11
13	100941	SCREW, HEX HEAD CAP 3/4-10 X 2-1/4 GR8	4
14	101385	NUT, HEX LOCK 1-1/4-7 GRB	4
15	129942	BUMPER WELDMENT	1
16	131874	AXLE, 15K 78 TRACK AIR BRAKE (SEE PAGE 2-31)	1
17	131875	KIT, HARDWARE 15K (SEE PAGE 2-31)	1
18	168180	UNDERCARRIAGE WELDMENT	1
19	168186	PIN, ROLLER U/C	4
20	168199	ROLLER TUBE	4
21	168200	HOLD-DOWN U/C	4
22	2024-2-4S	ADAPTER, ELBOW	*4,8
23	3-485-010001	MUD FLAP	2
24	3-755-010189-03	SUPPORT E-CHAIN **(BEFORE 6-3-2015)**	1
	3-755-010189-1	LINK **(BEFORE 6-3-2015)**	1
	189316	SUPPORT, E-CHAIN, 34 LINKS 3838 **(AFTER 6-3-2015)**	1
25	3-762-010017	CLAMP MUD FLAP	2
26	3-821-010005	TRAY CAT TRACK	1
27	622-3511-008	WASHER 3/4	4
28	190701	BRACKET WLDMT, E-CHAIN LH **(AFTER 6-3-2015)**	
29	190706	BRACKET WLDMT, E-CHAIN RH **(AFTER 6-3-2015)**	
30	190700ZP	BRACKET, E-CHAIN LH **(AFTER 6-3-2015)**	
31	190705ZP	BRACKET, E-CHAIN RH **(AFTER 6-3-2015)**	
	189380	FIELD INSTALLATON KIT **(ITEM 24 & 28-31)**	1

Eastern Wrecker Sales, Inc. - www.easternwrecker.com - 919-553-4038

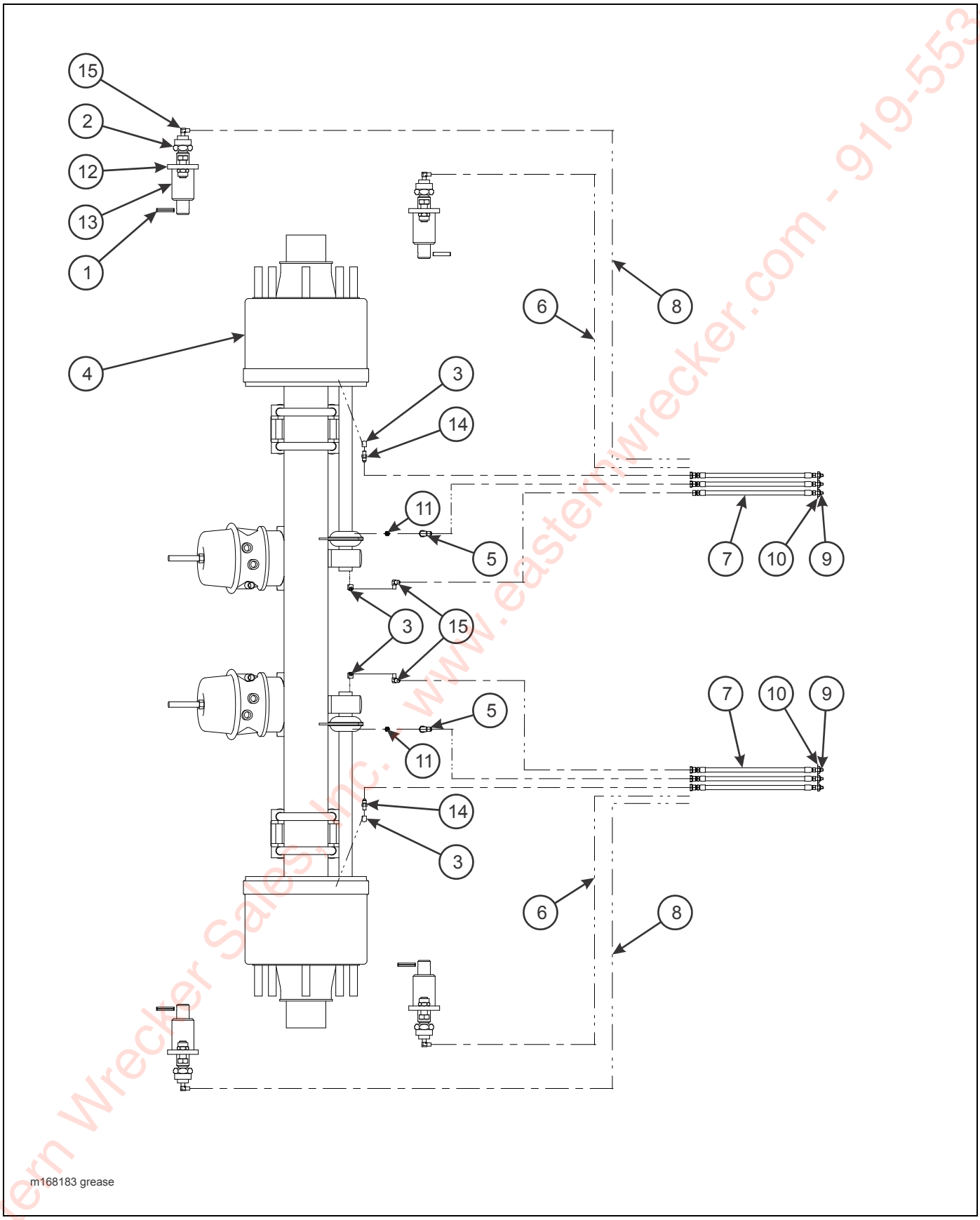

Figure 2-18: Undercarriage Assembly - Grease System

Eastern Wrecker Sales, Inc. - www.easternwrecker.com - 919-553-4038

UNDERCARRIAGE ASSEMBLY - GREASE SYSTEM

ITEM	PART NO.	DESCRIPTION	QTY.
	168183	UNDERCARRIAGE ASSEMBLY	
1	1-647-010004255	ROLL PIN, SLOTTED 3/8 X 2	4
2	101385	NUT, HEX LOCK 1-1/4-7 GRB	4
3	101528	ELBOW, BRASS PIPE STREET	4
4	131874	AXLE, 15K 78 TRACK AIR BRAKE (SEE PAGE 2-31)	1
5	138155	ADAPTER, 90	2
6	142442	HOSE ASSEMBLY, GREASE 1/4 X 60	2
7	142443	HOSE ASSEMBLY, GREASE 1/4 X 72	6
8	142444	HOSE ASSEMBLY, GREASE 1/4 X 83	2
9	142545	NUT, 7/16	10
10	142553	DECAL, GREASE TRAILER U/C	2
11	161797	ADAPTER, STRAIGHT	2
12	168186	PIN, ROLLER U/C	4
13	168199	ROLLER TUBE	4
14	2021-2-4	ADAPTER, STRAIGHT	2
15	2024-2-4S	ADAPTER, ELBOW	6

Eastern Wrecker Sales, Inc. - www.easternwrecker.com - 919-553-4038

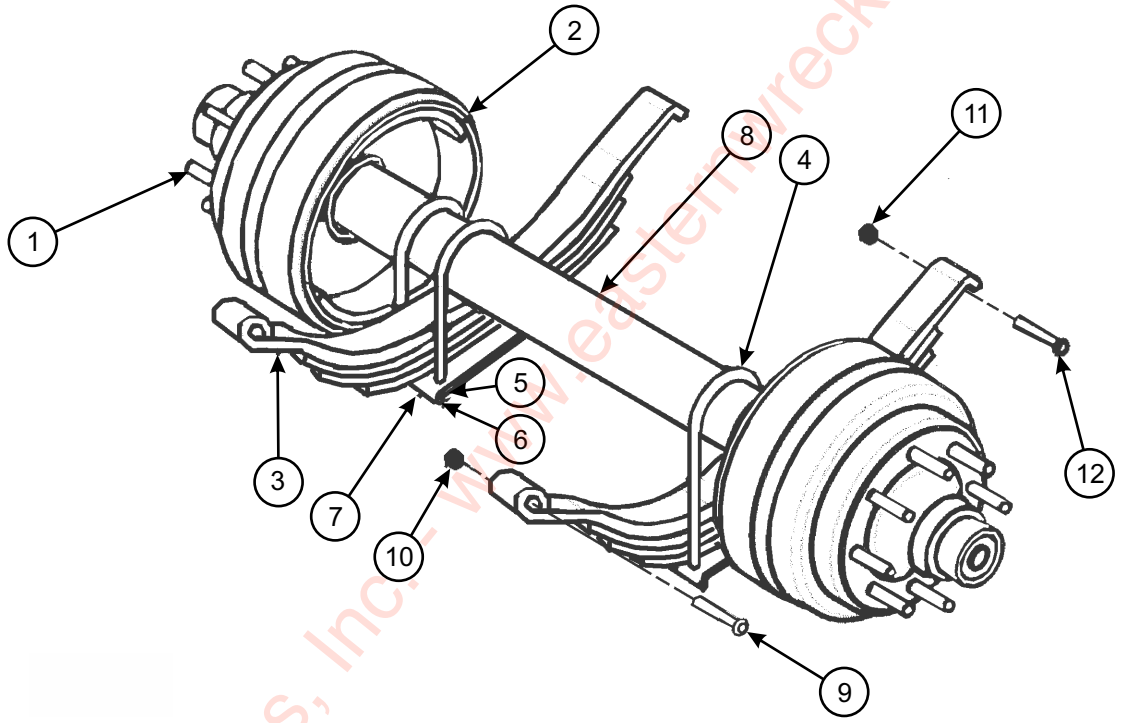

m131650 axle assy

Figure 2-19: Axle Assembly

Eastern Wrecker Sales, Inc. - www.easternwrecker.com - 919-553-4038

AXLE ASSEMBLY

ITEM	PART NO.	REFERENCE NO.	DESCRIPTION	QTY.
	131650		AXLE 78TK, 15K AIR BRAKE	
	131065	HAP-103-00	SUSPENSION KIT (INCLUDES HANGERS AND HARDWARE) (NOT SHOWN)	
	131875		HARDWARE KIT, 15K (INCL. ITEMS 9 - 12)	
	131876		HANGERS, AXLE 15K (INCL. ITEMS 13 & 14)	
1	-----		HUB AND DRUM ASSEMBLY (SEE PAGE 2-37)	2
2	-----		HYDRAULIC BRAKE PARTS - 12-1/4” X 5” (SEE PAGE 2-33)	1
	-----		AIR BRAKE PARTS - 12-1/4” X 5” (SEE PAGE 2-35)	1
3	130649	072-045-01	SLIPPER SPRING	2
4	131063	011-070-00	U-BOLT	4
5	131061	005-095-00	WASHER, FLAT	8
6	131062	006-113-00	NUT, LOCK	8
7	131064	012-046-00	TIE PLATE	2
8	131874		AXLE, 15K 78 TRACK AIR BRAKE (ITEMS 1-7)	1
9	-----	007-169-00	SPRING EYE BOLT	2
10	-----	006-112-00	LOCK NUT 1-8	2
11	-----	006-046-00	LOCK NUT 1/2-20	2
12	-----	007-095-00	KEEPER BOLT	2
13	-----	028-067-04	FRONT HANGER (NOT SHOWN)	2
14	-----	030-066-01	REAR HANGER (NOT SHOWN)	2

Eastern Wrecker Sales, Inc. - www.easternwrecker.com - 919-553-4038

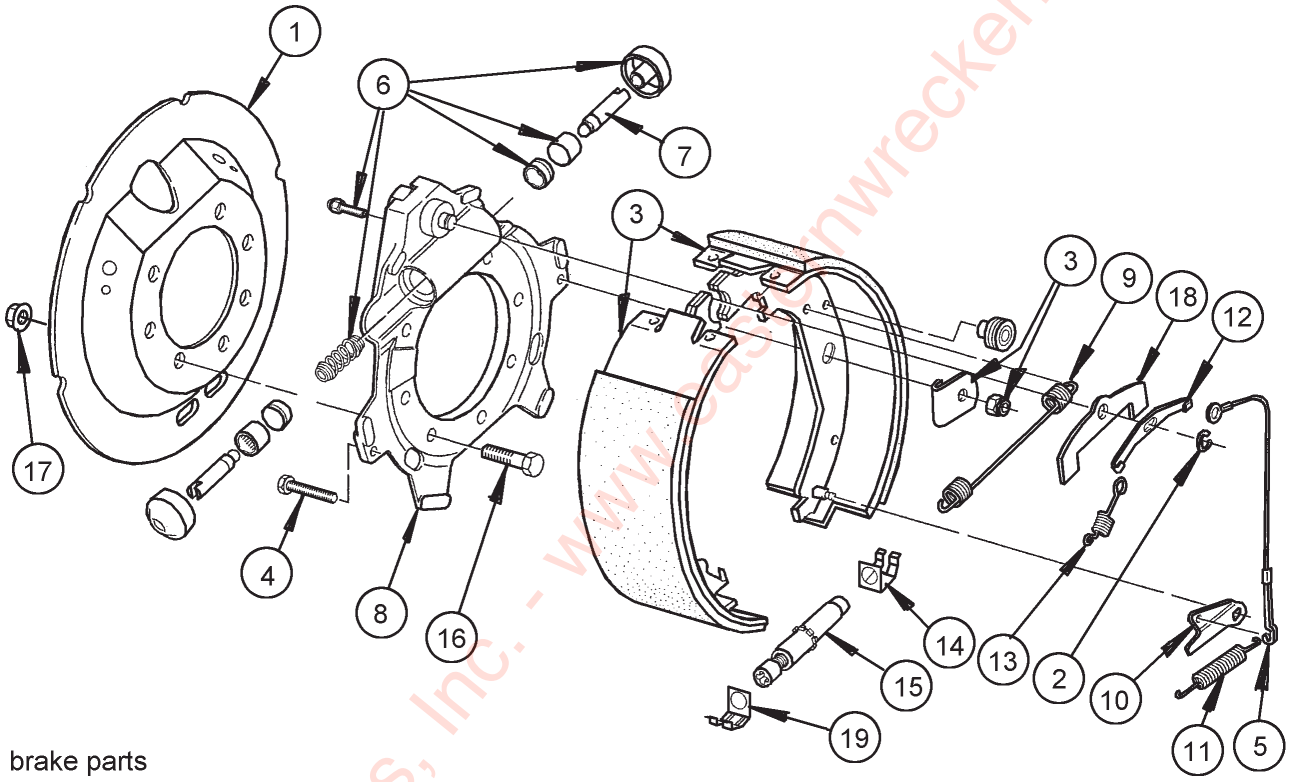

Figure 2-20: Hydraulic Brake Parts - Dexter (12-1/4” x 5”)

Eastern Wrecker Sales, Inc. - www.easternwrecker.com - 919-553-4038

HYDRUALIC BRAKE PARTS - DEXTER (12-1/4” X 5”)

ITEM	PART NO.	DESCRIPTION	QTY.
1	036-115-23	DUST COVER	1
2	069-053-00	RETAINER	1
3	K71-169-00	LH SHOE AND LINING KIT	1
	K71-170-00	RH SHOE AND LINING KIT	1
4	007-113-00	SHOE HOLDDOWN SCREW	2
5	071-462-00	ADJUSTER CABLE	1
6	K71-082-00	WHEEL CYLINDER KIT	1
7	054-033-00	CYLINDER PUSH ROD	2
8	036-063-04	SPIDER ASSEMBLY	1
9	046-087-00	RETRACTOR SPRING	1
10	071-464-00	LH ADJUSTER LEVER	1
	071-463-00	RH ADJUSTER LEVER	1
11	046-135-00	LH ADJUSTER LEVER SPRING	1
	146-134-00	RH ADJUSTER LEVER SPRING	1
12	071-456-00	CABLE ATTACHMENT BRACKET FSA	1
13	046-131-01	EXTENSION SPRING	1
14	046-133-00	ADJUSTER CLIP - BARREL END	1
15	048-019-00	LH ADJUSTER ASSEMBLY	1
	048-020-00	RH ADJUSTER ASSEMBLY	1
16	007-116-00	BRAKE MOUNTING BOLT	7
17	006-092-00	BRAKE MOUNTING NUT	7
18	034-062-00	PISTON STOP	1
19	046-132-00	ADJUSTER CLIP - THREAD END	1

NOTE: PART NUMBERS ON THIS PAGE ARE DEXTER PART NUMBERS AND CAN BE PURCHASED FROM YOUR LOCAL DEXTER SUPPLIER. LANDOLL CORPORATION DOES NOT STOCK THESE REPLACEMENT PARTS.

Eastern Wrecker Sales, Inc. - www.easternwrecker.com - 919-553-4038

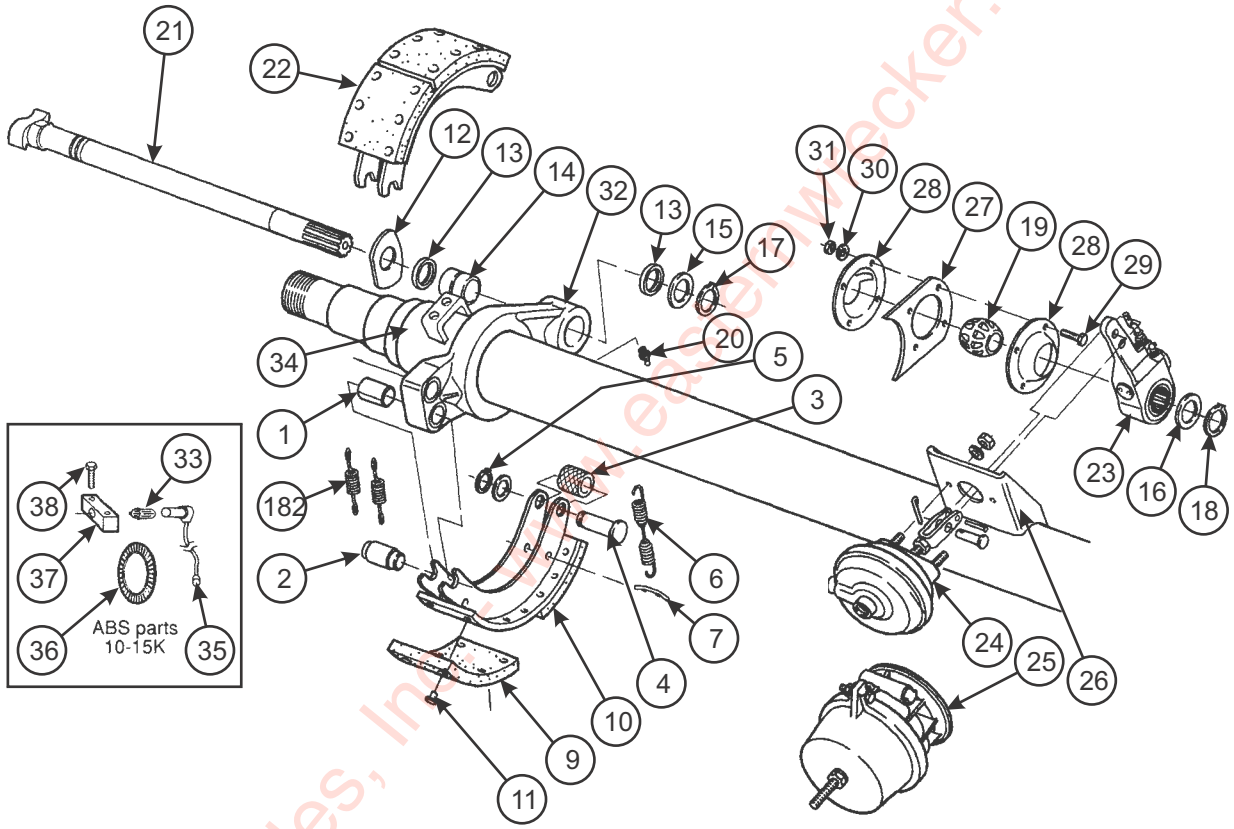

Figure 2-21: Air Brake Parts - Dexter (12-1/4” X 5”)

Eastern Wrecker Sales, Inc. - www.easternwrecker.com - 919-553-4038

AIR BRAKE PARTS - DEXTER (12-1/4” X 5”)

ITEM	PART NO.	REFERENCE NO.	DESCRIPTION	QTY.
	K71-460-00	K71-460-00	BRAKE SHOE REPAIR KIT **(ITEMS 1-8)**	
	-----	K71-152-00	BRAKE BLOCK KIT **(ITEMS 9, 10, & 11)**	
	K71-101-00	K71-101-00	CAMSHAFT REPAIR KIT **(ITEMS 12-20)**	
1	-----	014-068-00	BUSHING, SPIDER ANCHOR PIN	4
2	-----	056-017-00	ANCHOR PIN	4
3	-----	014-057-00	ROLLER	2
4	-----	056-010-00	ROLLER PIN	4
5	-----	069-018-00	ROLLER PIN RETAINER	4
6	-----	046-092-00	RETRACTOR SPRING	2
7	056-018-00	056-018-00	RETAINER PIN	4
8	046-097-00	046-097-00	SHOE KEEPER SPRING	4
9	-----	041-053-01	LINING, BRAKE BLOCK ANCHOR	4
10	-----	041-053-02	LINING, BRAKE BLOCK CAM	4
11	-----	022-048-00	RIVET	48
12	005-074-00	005-074-00	D” WASHER, CAMSHAFT	2
13	010-052-00	010-052-00	SEAL, GREASE	2
14	014-056-00	014-056-00	BUSHING, CAMSHAFT	2
15	005-075-00	005-075-00	WASHER, CAMSHAFT SPIDER END	14
16	113819	005-134-00	WASHER, CAMSHAFT 28 SPLINE	14
17	069-020-00	069-020-00	RETAINER, CAMSHAFT	2
18	069-078-00	069-078-00	RETAINER, CASHAFT END	2
19	014-058-00	014-058-00	BUSHING, CAMSHAFT SUPPORT	2
20	113820	061-006-00	FITTING, GREASE	2
21	034-188-03	034-188-03	CAMSHAFT, 22-5/16” LH	2
	034-189-03	034-189-03	CAMSHAFT, 22-5/16” RH	2
22	144974	040-322-01	SHOE AND LINING ASSEMBLY	2
23	-----	055-040-99	SLACK ADJUSTER, AUTOMATIC	2
24	144976	034-059-00	AIR CHAMBER, W/ HARDWARE	2
25	144977	034-060-00	AIR CHAMBER, W/ SPRING BRAKE	2
26	034-048-00	034-048-00	AIR CHAMBER BRACKET	2
27	034-031-00	034-031-00	PLATE, CAMSHAFT SUPPORT BRACKET	2
28	034-032-00	034-032-00	PLATE, CAMPSHAFT RETAINER	4
29	007-139-00	007-139-00	BOLT, RETAINER PLATE	8
30	005-079-00	005-079-00	LOCK WASHER	8
31	006-099-00	006-099-00	NUT	8
32	113821	036-113-02	BRAKE SPIDER	2
33	144979	097-002-00	ABS RETAINER CLIP	4
34	144980	024-101-00	ABS LOWER SENSOR MOUNTING BLOCK	2
35	128550	097-003-00	ABS SENSOR 90°	2
36	144981	024-203-00	ABS TONE RING IN DRUM	2
37	141931	024-101-01	ABS UPPER SINSOR MOUNTING BLOCK	2
38	144982	007-237-00	MOUNTING SCREW UPPER BLOCK	4

Eastern Wrecker Sales, Inc. www.easternwrecker.com - 919-553-4038

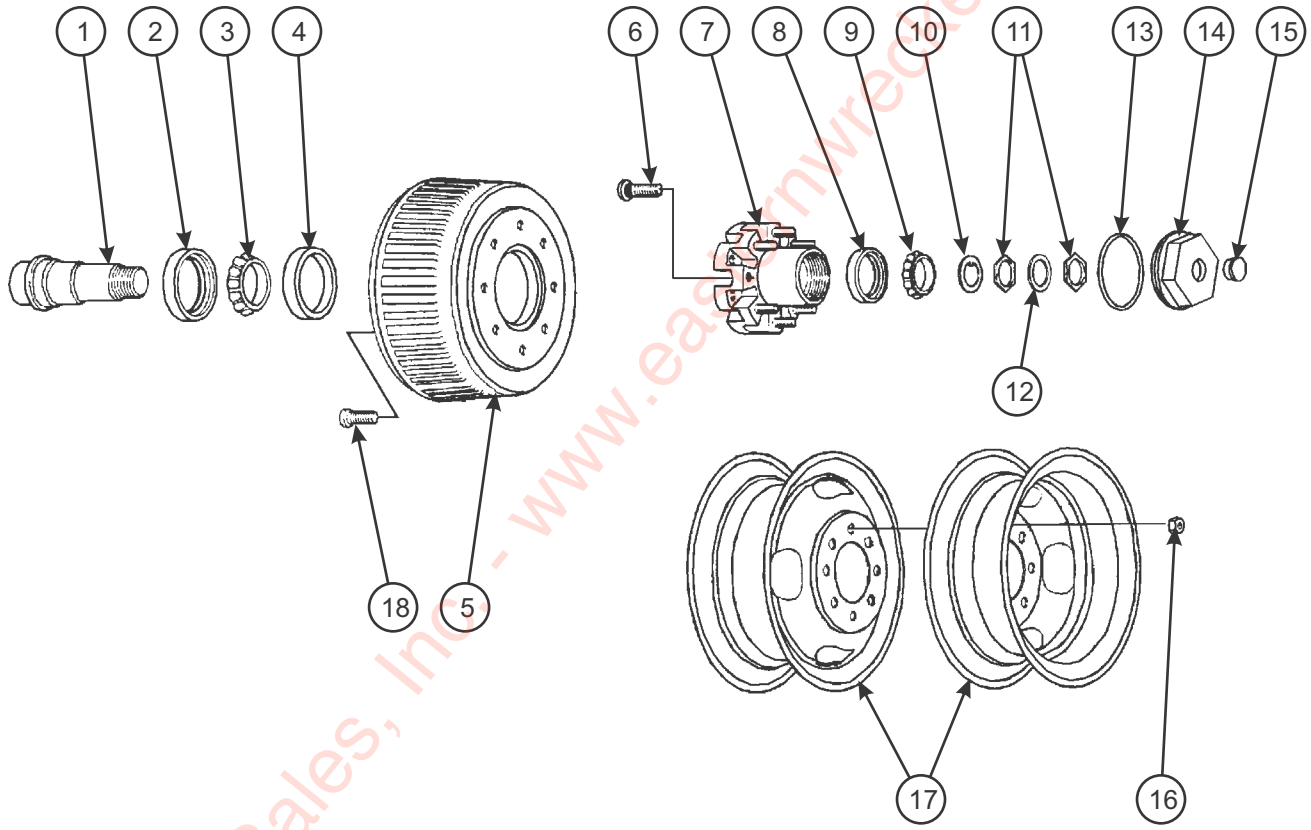

15k metric hub

Figure 2-22: 15K General Duty Hub and Drum Assembly

Eastern Wrecker Sales, Inc. - www.easternwrecker.com - 919-553-4038

15K GENERAL DUTY HUB AND DRUM ASSEMBLY

ITEM	PART NO.	DESCRIPTION	QTY.
1	-----	AXLE, 15K 78 TRACK	1
2	111952	UNITIZED OIL SEAL	1
3	111954	INNER BEARING CONE	1
4	111956	INNER BEARING CUP	1
5	145010	BRAKE DRUM - ABS	1
6	131069	WHEEL MOUNTING STUD	10
7	131066	HUB W/ CUPS AND STUDS	1
8	111963	OUTER BEARING CUP	1
9	111965	OUTER BEARING CONE	1
10	111966	SPINDLE WASHER	1
11	111967	SPINDLE NUT	1
12	111968	TANG WASHER	1
13	111947	OIL CAP O-RING	1
14	111948	OIL CAP	1
15	113837	OIL CAP PLUG	1
16	131067	FLANGE NUT	1
17	3-870-010097	WHEEL DISC PILOT MOUNT 17.5 X 6.75	1
18	131070	DRUM MOUNTING SCREW	1
19	147474	TIRE 215/75R 17.5 DOUBLE COIN **(NOT SHOWN)**	1
	147473	TIRE 235/75R 17.5 DOUBLE COIN **(NOT SHOWN)**	1
20	TR573	VALVE STEM (NOT SHOWN	1
	131068	HUB AND DRUM ASSEMBLY **(ITEMS 5 & 7)**	

Eastern Wrecker Sales, Inc. - www.easternwrecker.com - 919-553-4038

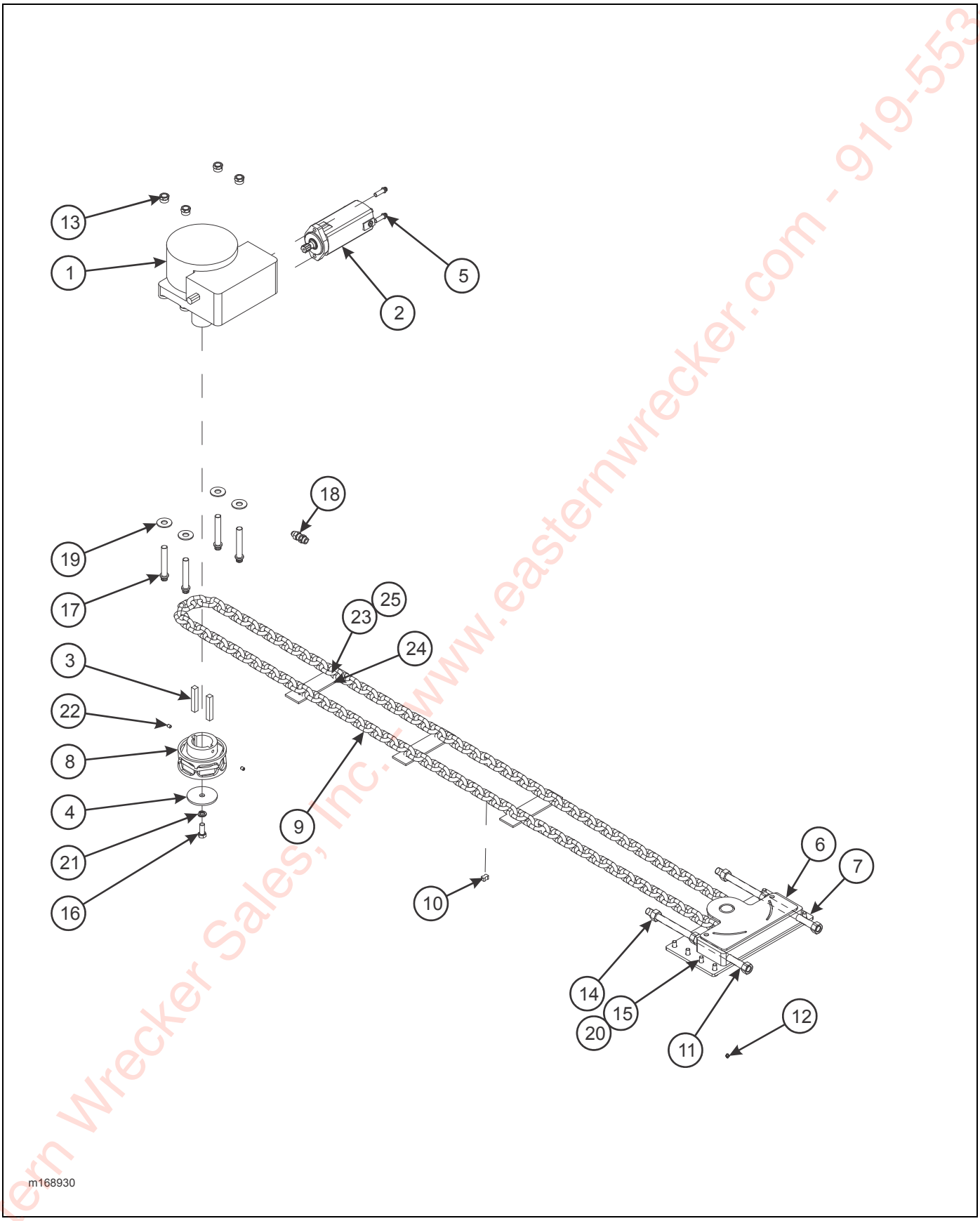

Figure 2-23: Gearbox Assembly (Chain Drive Model)

Eastern Wrecker Sales, Inc. - www.easternwrecker.com - 919-553-4038

GEARBOX ASSEMBLY (CHAIN DRIVE MODEL)

ITEM	PART NO.	DESCRIPTION	QTY.
	168930	GEARBOX ASSEMBLY (30')	
	171659	GEARBOX ASSEMBLY (31-1/2')	
1	126858	GEARBOX, BRADEN (SEE PAGE 2-40)	1
2	126973	MOTOR FOR BRADEN GEARBOX	1
	61258	SEAL KIT FOR MOTOR	1
3	127598	SQUARE ROD, 5/8 X 3-3/4	2
4	128713	WASHER, KEEPER CHAIN GEAR	1
5	130127	SCREW, 12 PT 1/2-13 X 1-1/2	2
6	167382	BRACKET WELDMENT, SUPPORT PULLEY	1
7	167384	COVERPLATE PULLEY CL	1
8	169359	BUSHING, CHAIN SPROCKET 1/2 LG	1
9	167404	CHAIN, 1/2 X 45' GR7 (30')	1
	171660	CHAIN, 1/2 X 48' GR7 (31-1/2')	1
10	129214	SPLICE, CHAIN 1/2	1
11	169358	ROD WELDMENT 7/8-9 X 19	1
12	1-298-010001-1	FITTING, GREASE 1/4-28	1
13	1-512-010005-15	NUT, HEX LOCK 3/4-10 GRB	4
14	1-512-010007-13	NUT, HEX 7/8-9 GRB	2
15	1-654-010055-02	SCREW, HEX HEAD CAP 1/2-13 X 1-1/4 GR5	1
16	1-654-010059-03	SCREW, HEX HEAD CAP 5/8-11 X 1-1/2 GR5	1
17	139345	SCREW, 12 PT 3/4-10 X 4-1/2	4
18	202702-10-8S	ADAPTER	2
19	1-861-010032-21	WASHER, FLAT 3/4W	4
20	1-861-010034-13	WASHER, SPLIT LOCK 1/2	1
21	1-861-010034-15	WASHER, SPLIT LOCK 5/8	1
22	110-3494	SET SCREW, SOCKET HEAD 3/8-16 X 1/2	2
23	118631	SCREW, HEX SOCKET CTSK 1/4-20 X 3/4	6
24	169382	PAD, UHWM CHAIN RUB BAR	1
25	1-512-010005-01	NUT, HEX LOCK 1/4-20	6

Eastern Wrecker Sales, Inc. www.easternwrecker.com - 919-553-4038

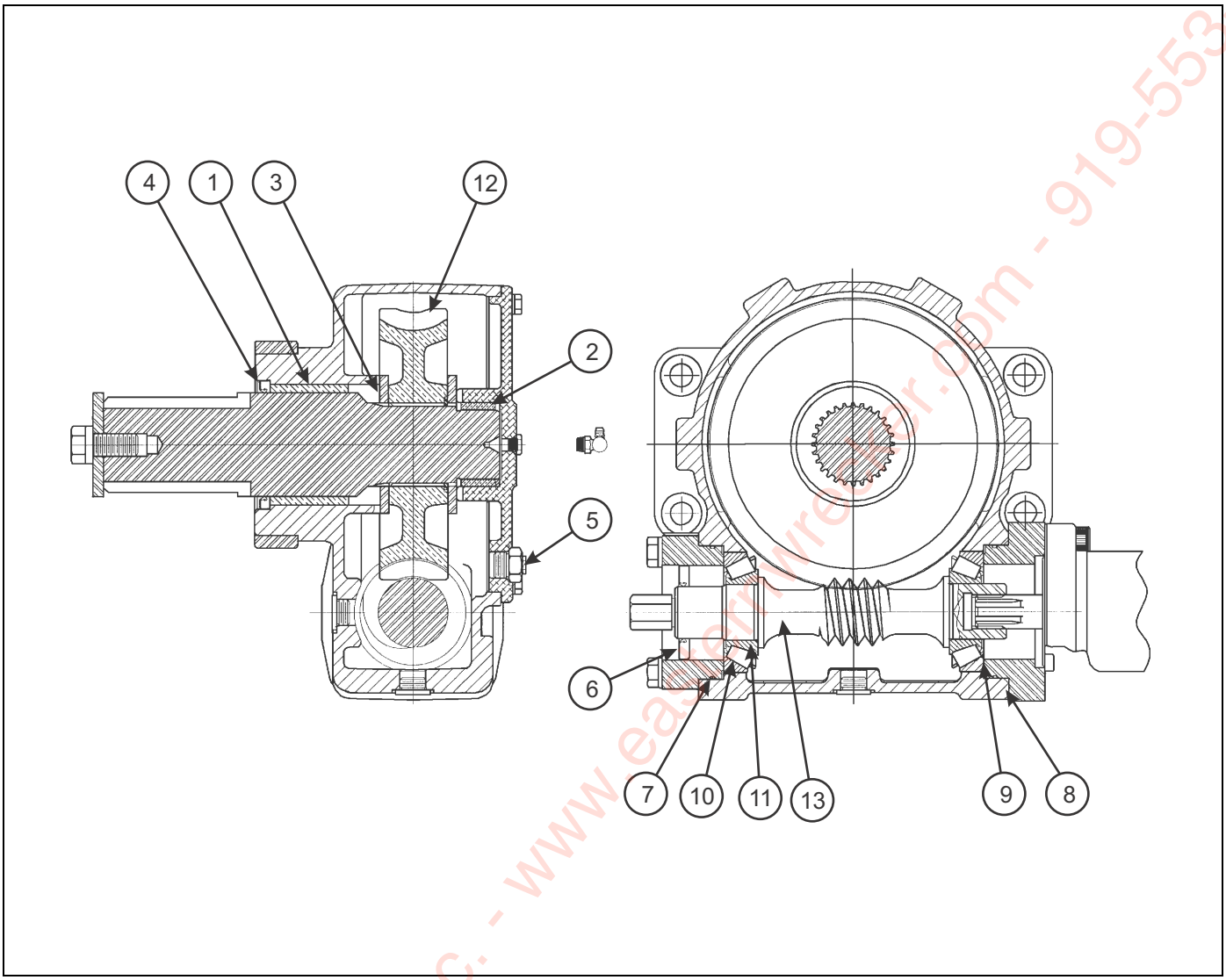

Figure 2-24: Gearbox Items

GEARBOX ITEMS

ITEM	PART NO.	DESCRIPTION	QTY.
	126858	GEARBOX	
1	130346	WORM HOUSING BUSHING	1
2	130347	WORM HOUSING COVER BUSHING	1
3	130348	THRUST WASHER	2
4	130349	SEAL	1
5	130350	RELIEF/VENT	1
6	130351	SEAL	1
7	130352	O-RING	2
8	130353	SHIM	2
9	137935	GASKET	1
10	194301	BEARING CUP	2
11	194302	BEARING CONE	2
12	194303	WORM GEAR (30:1 UT12C)	1
13	194304	WORM	1

Eastern Wrecker Sales, Inc. - www.easternwrecker.com - 919-553-4038

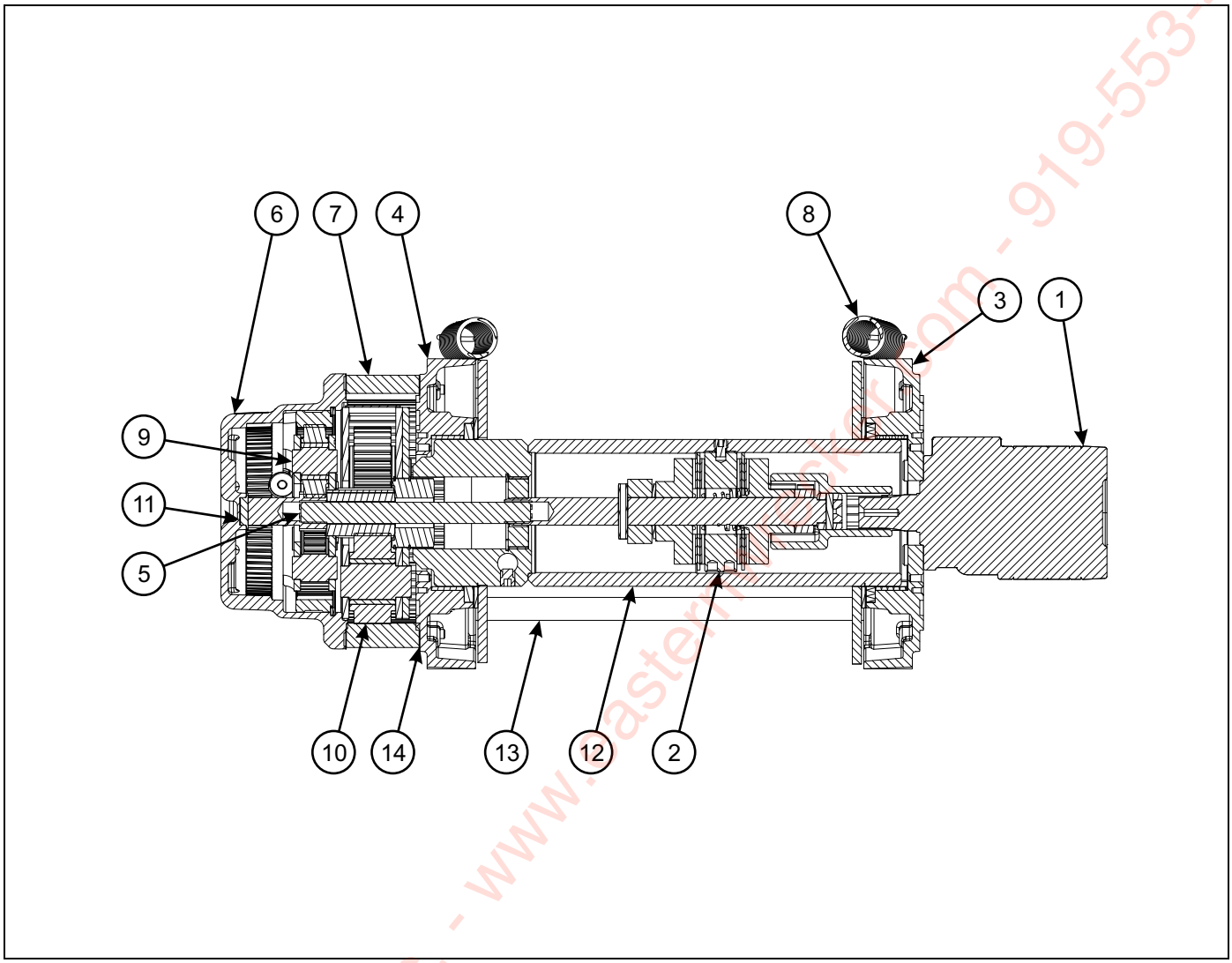

Figure 2-25: Winch items - 12M (WARN)

WINCH ITEMS - 12M (WARN)

ITEM	PART NO.	DESCRIPTION	QTY.
	166421	WINCH, 12M WARN W/LW & RMTC	
1	194305	MOTOR HYD 5.0CL	1
2	194306	BRAKE ASSEMBLY	1
3	194307	DRUM SUPPORT, MOTOR	1
4	194308	DRUM SUPPORT, GEAR END	1
5	194309	DRIVE SHAFT, HEX	1
6	194310	END HSG ASSY AIR	1
7	194117	GEAR RING	1
8	194118	SPRING EXTENSION, TENSIONER	2
9	194119	CARRIER, STAGE 2 M12000	1
10	194120	CARRIER, STAGE 3 4340	1
11	194121	GEAR, 15T	1
12	194122	DRUM ASSEMBLY	1
13	194123	TIE ROD	3
14	194124	GASKET, RING GEAR	2

Eastern Wrecker Sales Inc. - www.easternwrecker.com - 919-553-4038

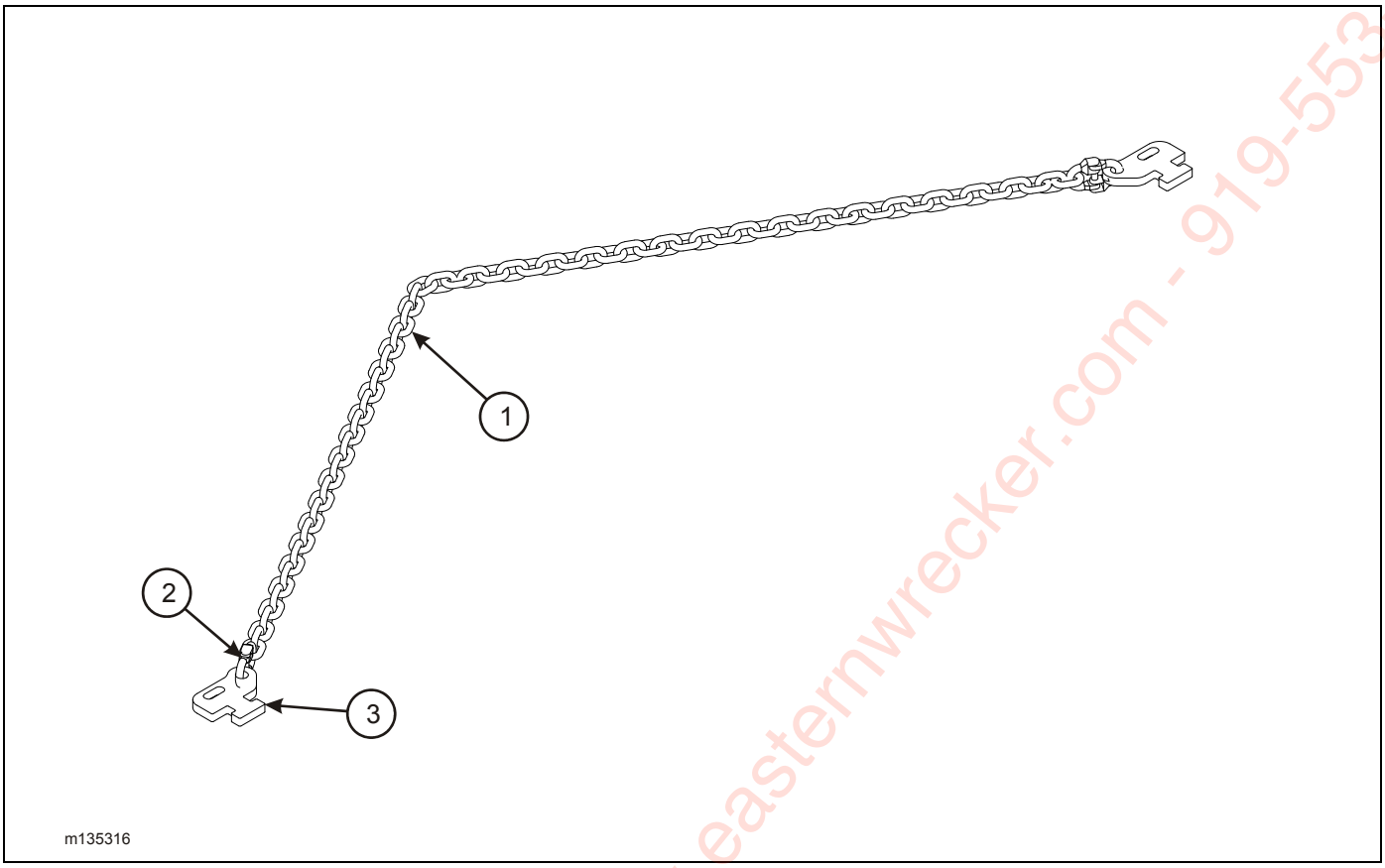

Figure 2-26: Container Load Chain Assembly (Option)

CONTAINER LOAD CHAIN ASSEMBLY (OPTION)

ITEM	PART NO.	DESCRIPTION	QTY.
	135316	CONTAINER LOAD CHAIN ASSEMBLY	
1	3-174-010039	CHAIN, 1/2 X 87" GR 7	1
2	3-174-010038	CHAIN LINK, CONNECTING 1/2	2
3	128480	PLATE, CONTAINER CONNECT	2

Eastern Wrecker Sales, Inc. - www.easternwrecker.com - 919-553-4038

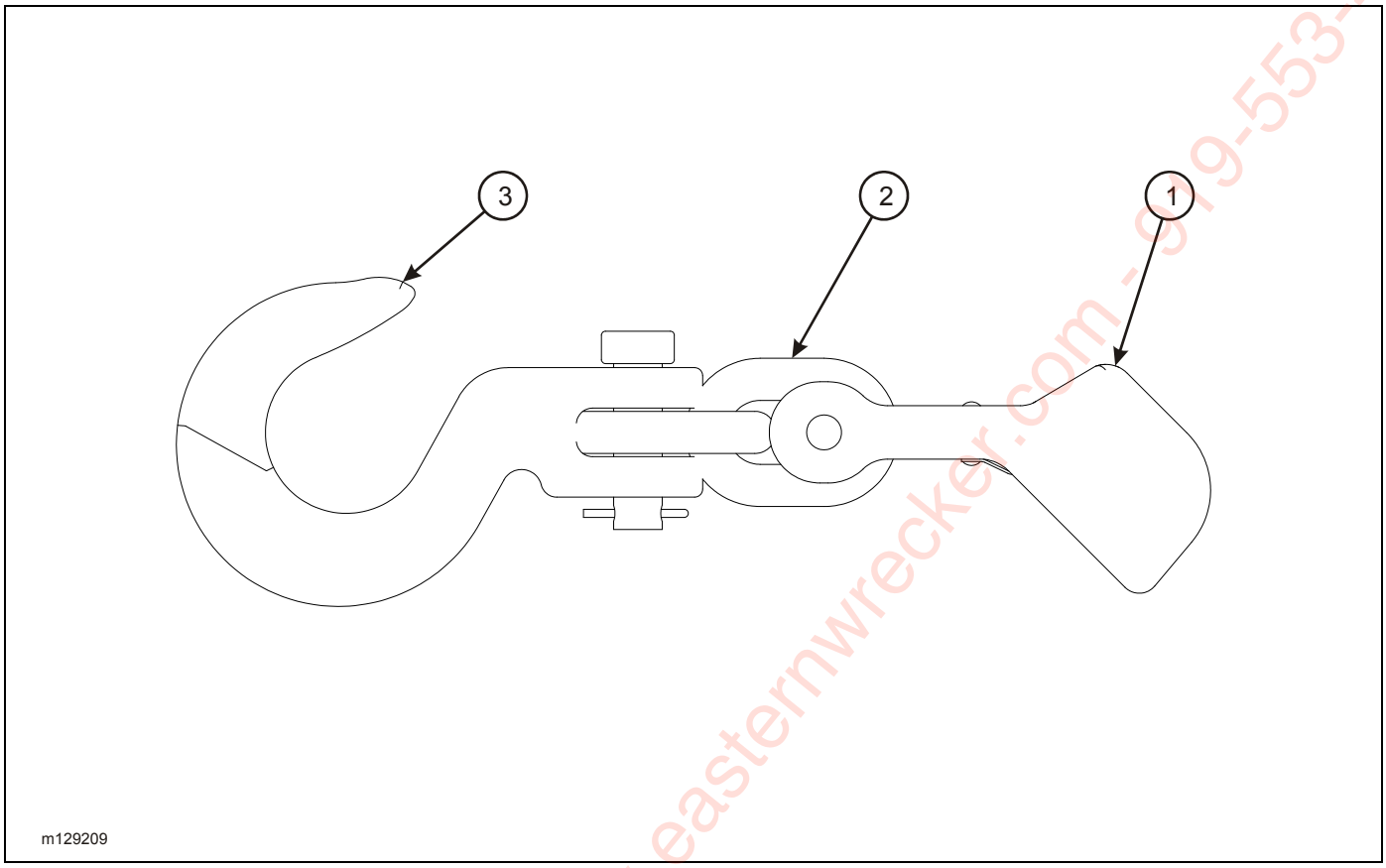

Figure 2-27: Chain Connect/ Container Assembly (Option)

CHAIN CONNECT/ CONTAINER ASSEMBLY

ITEM	PART NO.	DESCRIPTION	QTY.
	129209	CHAIN CONNECT/ CONTAINER ASSEMBLY	
1	128500	CHAIN SHORTENER LINK 1/2	1
2	3-174-010039	CHAIN 1/2” GR7	4”
3	7HCGHT500	HOOK CLEVIS GRAB 1/2	1

Eastern Wrecker Sales, Inc. www.easternwrecker.com - 919-553-4038

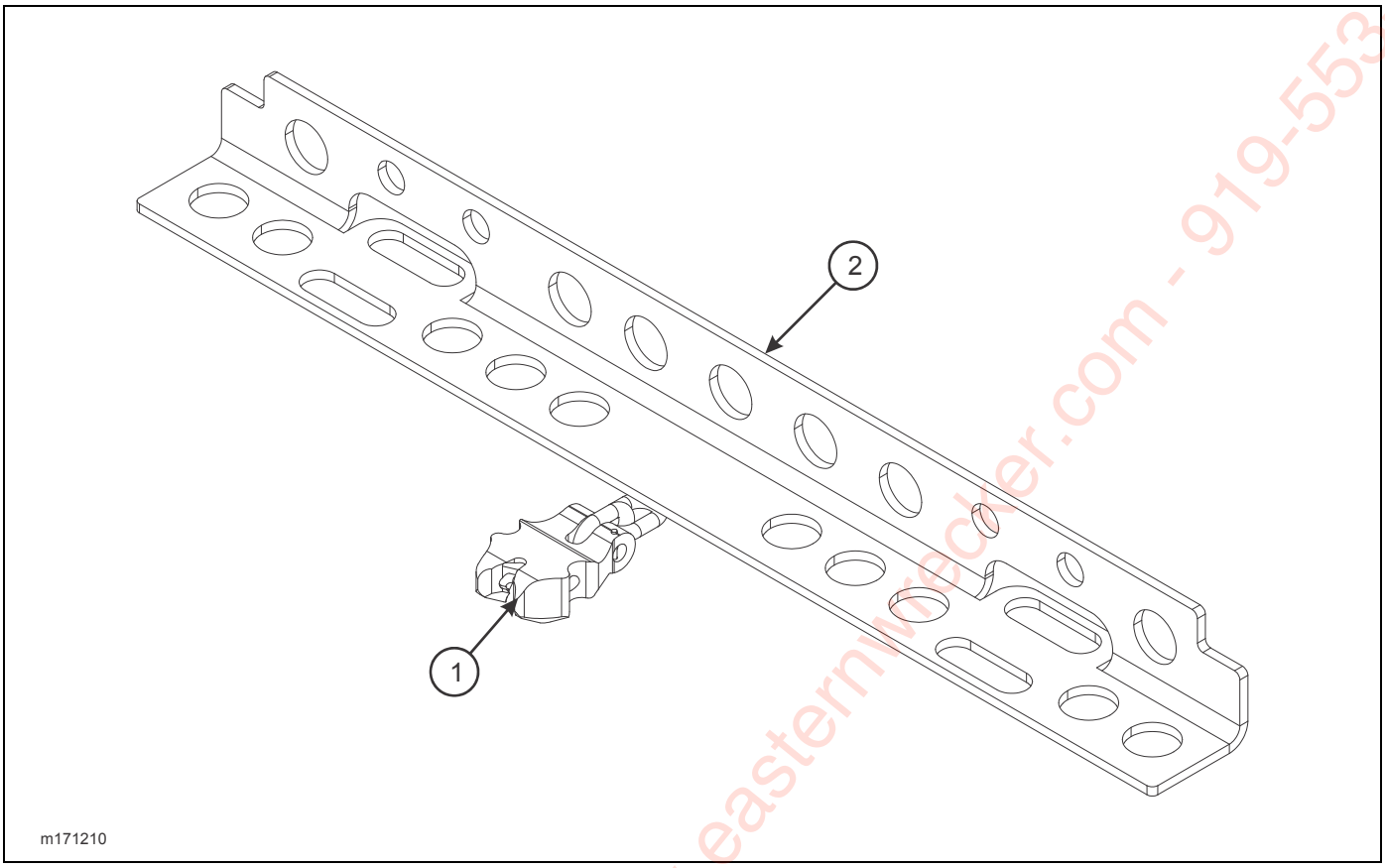

Figure 2-28: Container Pusher Assembly (Option)

CONTAINER PUSHER ASSEMBLY

ITEM	PART NO.	DESCRIPTION	QTY.
	171210	CONTAINER PUSHER ASSEMBLY	
1	128500	CHAIN SHORTENER LINK 1/2	1
2	171211	PUSHER, CONTAINER UNLOAD	1

Eastern Wrecker Sales, Inc. www.easternwrecker.com - 919-553-4038

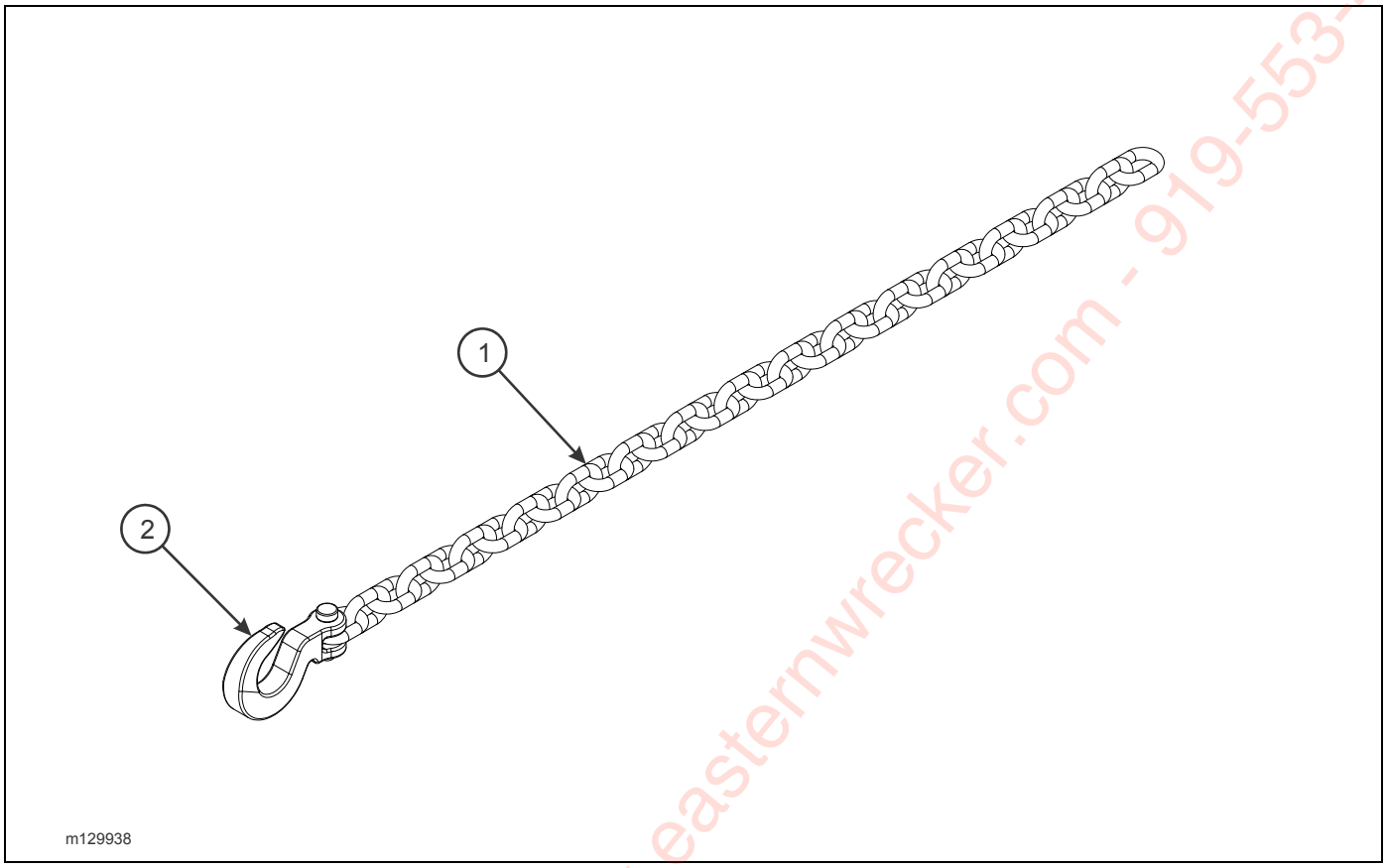

Figure 2-29: Chain and Hook Assembly (Option)

CHAIN AND HOOK ASSEMBLY

ITEM	PART NO.	DESCRIPTION	QTY.
	129938	CHAIN AND HOOK ASSEMBLY	
1	3-174-010039	CHAIN 1/2 GR7	42”
2	7HCGHT500	HOOK, CLEVIS GRAB 1/2	2

Eastern Wrecker Sales, Inc. - www.easternwrecker.com - 919-553-4038

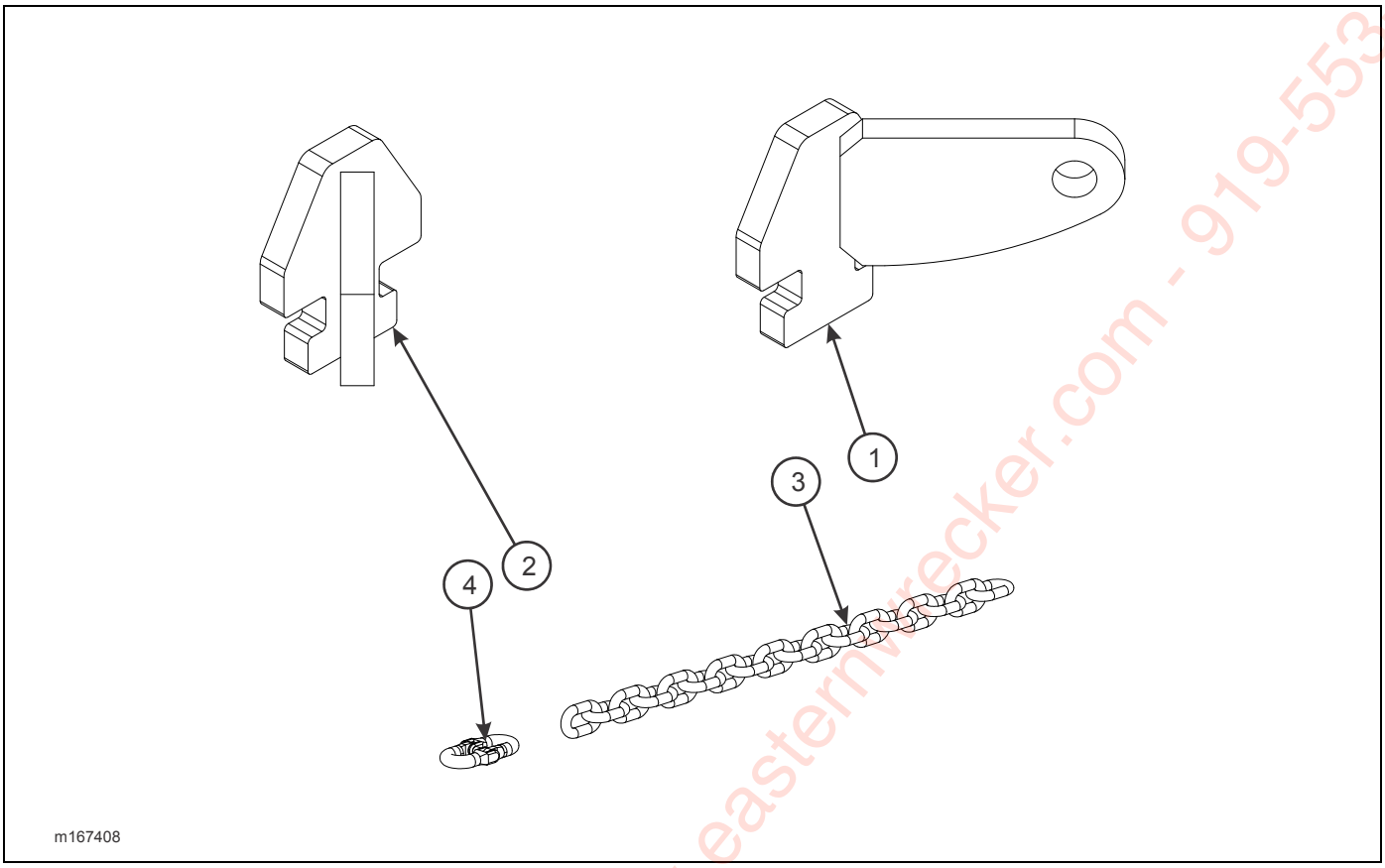

Figure 2-30: Hold-Down Rear Container Assembly (Option)

HOLD-DOWN REAR CONTAINER ASSEMBLY

ITEM	PART NO.	DESCRIPTION	QTY.
	167408	HOLD-DOWN REAR CONTAINER CL	
	169394	HOLD-DOWN REAR CONTAINER CL	
1	128973	CONNECTOR, CONTAINER REAR PULL LH	1
2	128974	CONNECTOR, CONTAINER REAR PULL RH	1
3	167409	CHAIN, 3/8 X 6’ GR7 (167408)	2
	169383	CHAIN, 3/8 X 12-1/2’ GR7 (169394)	2
4	3-174-010042	CHAIN LINK, CONNECTING 3/8	2

Eastern Wrecker Sales Inc. - www.easternwrecker.com - 919-553-4038

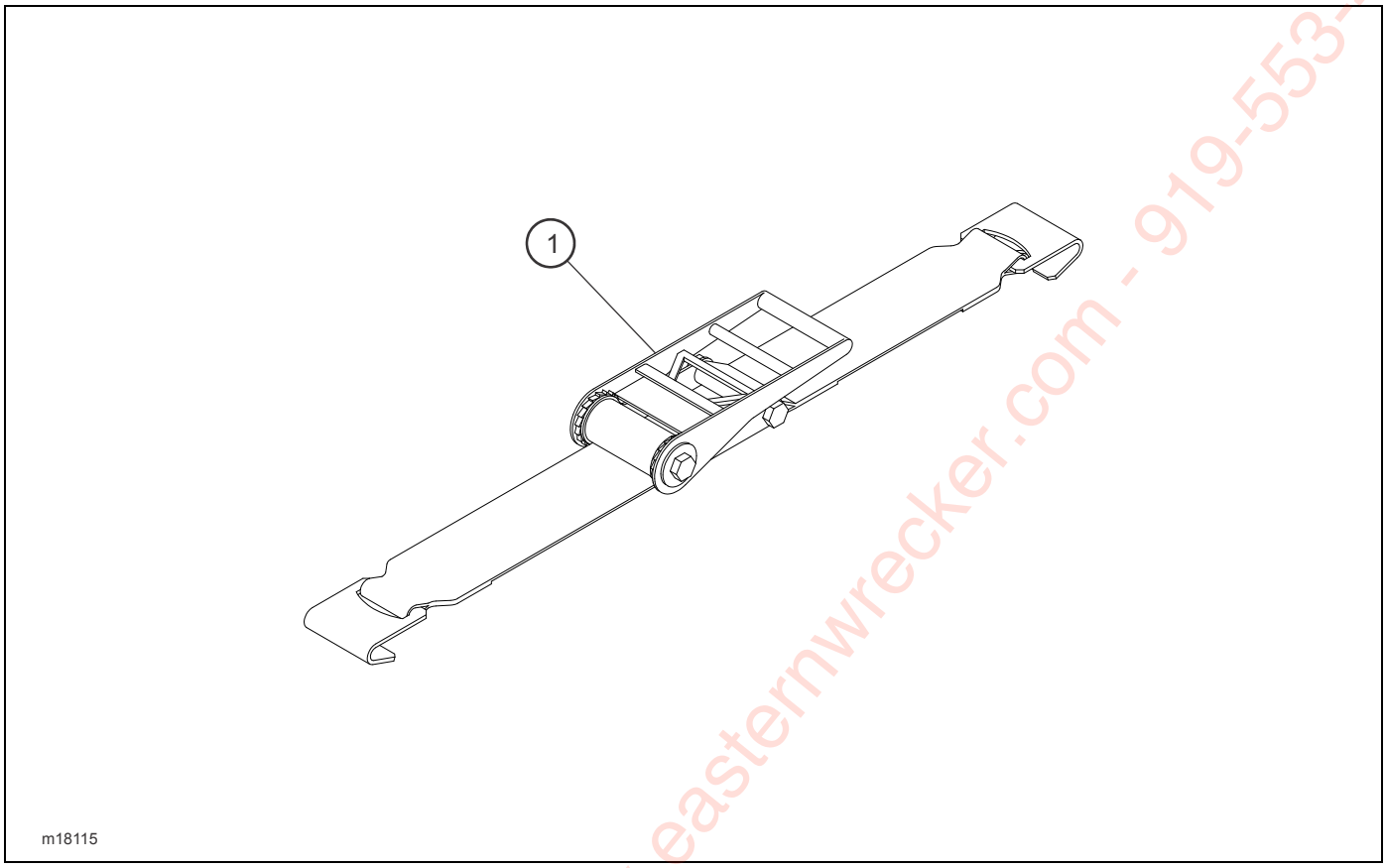

Figure 2-31: Strap Ratchet 4” x 30’ (Option)

STRAP RATCHET 4” X 30’

ITEM	PART NO.	DESCRIPTION	QTY.
1	138115	STRAP RATCHET 4” X 30’	1

Eastern Wrecker Sales, Inc. www.easternwrecker.com - 919-553-4038

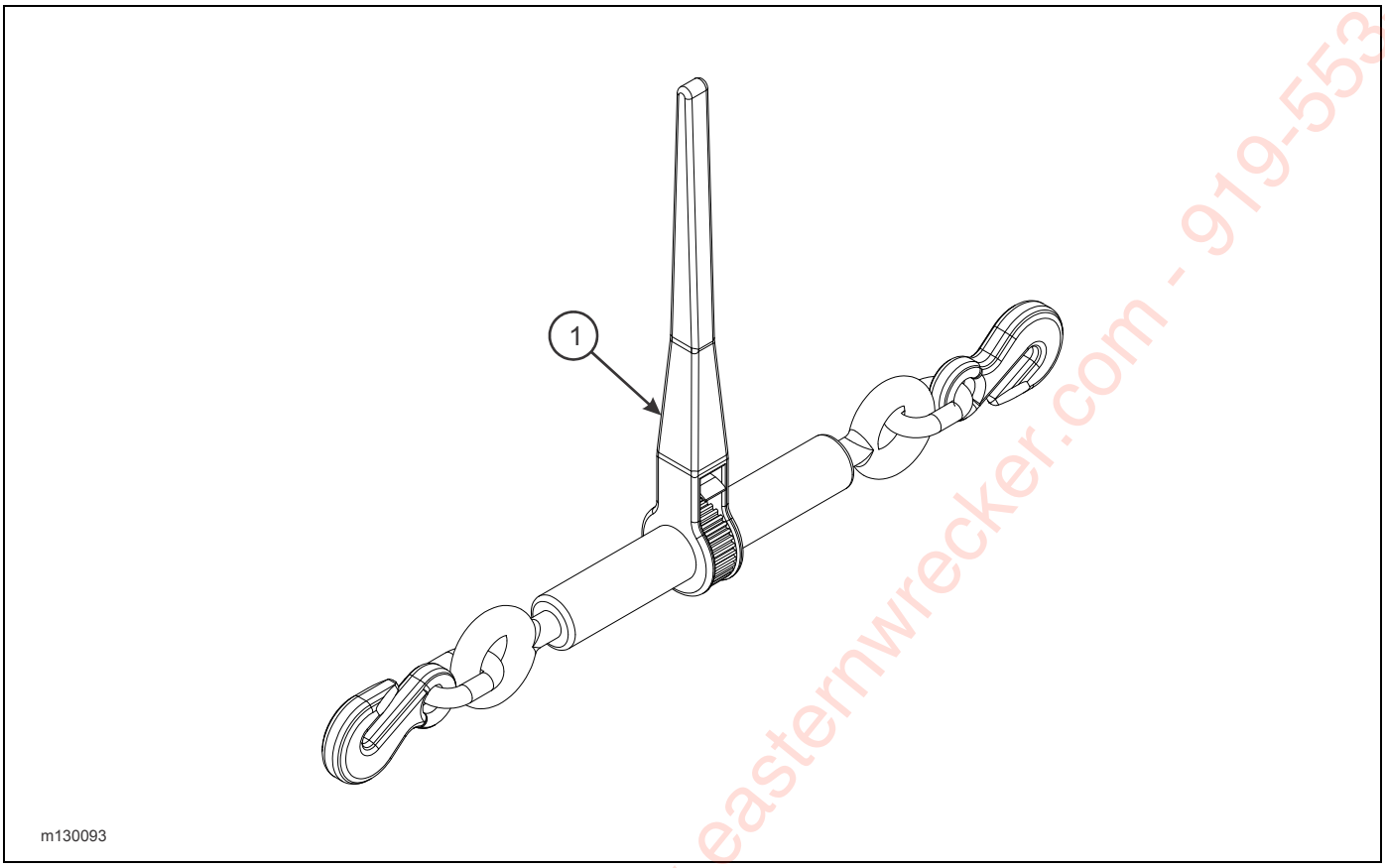

Figure 2-32: Load Binder 3/8 Ratchet Style (Option)

LOAD BINDER 3/8 RATCHET STYLE (OPTION)

ITEM	PART NO.	DESCRIPTION	QTY.
1	130093	LOAD BINDER 3/8 RATCH STYLE	1

Eastern Wrecker Sales, Inc. www.easternwrecker.com - 919-553-4038

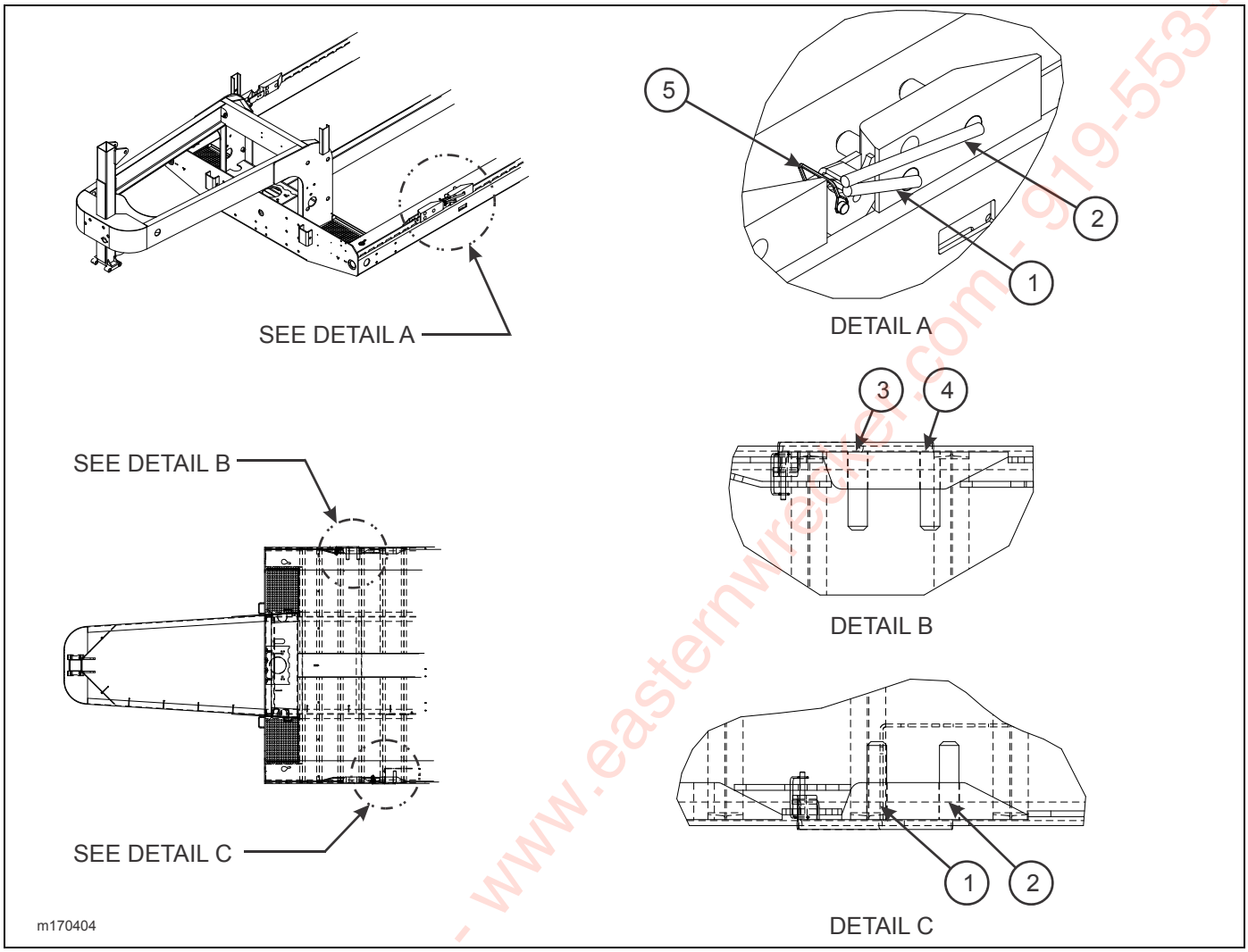

Figure 2-33: Container Lock-Down Pins (Option)

CONTAINER LOCK-DOWN PINS

ITEM	PART NO.	DESCRIPTION	QTY.
	170404	PINS, CONTAINER LOCK-DOWN	
1	170394	PIN WELDMENT, HOLD-DOWN LF	1
2	170395	PIN WELDMENT, HOLD-DOWN LR	1
3	170396	PIN WELDMENT, HOLD-DOWN RF	1
4	170397	PIN WELDMENT, HOLD-DOWN RR	1
5	516-22PTL	PIN, MUD FLAP	2

Eastern Wrecker Sales, Inc. - www.easternwrecker.com - 919-553-4038

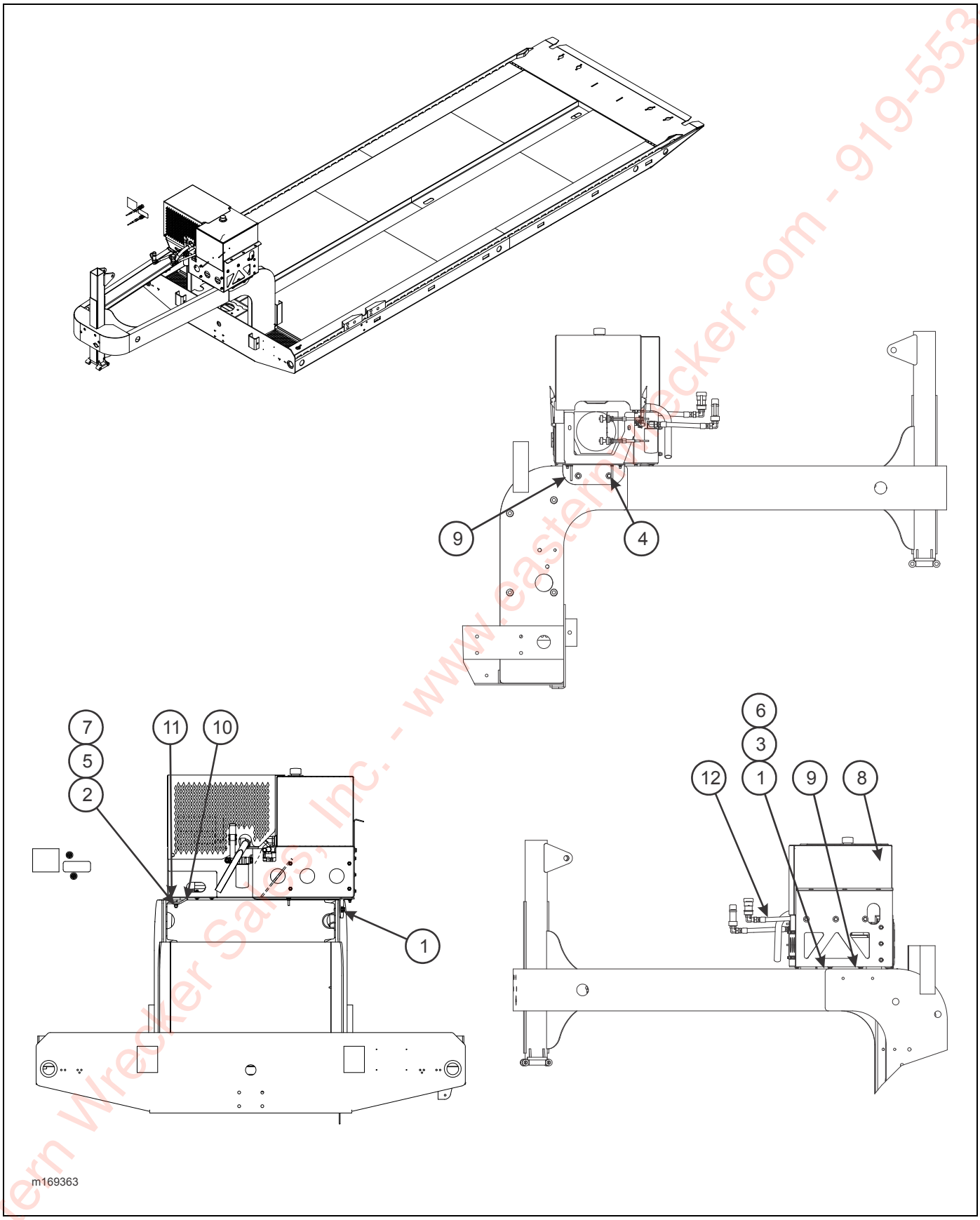

Figure 2-34: Engine Package, Front Mount

Eastern Wrecker Sales, Inc. - www.easternwrecker.com - 919-553-4038

27HP GAS ENGINE PACKAGE (OPTION)

ITEM	PART NO.	DESCRIPTION	QTY.
	169363	27 HP GAS ENGINE PACKAGE	
1	1-512-010005-05	NUT, HEX LOCK 3/8-16 GRB	3
2	1-512-010005-09	NUT, HEX LOCK 1/2-13 GRB	4
3	1-654-010051-06	SCREW, HEX HEAD CAP 3/8-16 X 1-1/4 GR5	3
4	1-654-010055-04	SCREW, HEX HEAD CAP 1/2-13 X 1-3/4 GR5	2
5	1-654-010070-07	SCREW, RD HEAD SQ NECK 1/2-13 X 2-1/2 GR5	2
6	1-861-010032-11	WASHER, FLAT 3/8W	3
7	1-861-010032-15	WASHER, FLAT 1/2W	4
8	123166	27HP GAS ENGINE PACKAGE (SEE PAGE 2-56)	1
9	169397	BRACKET, ENGINE DRIVE RH	2
10	169362	BRACKET, ENGINE DRIVE RH	2
11	169364	SPACER, ENGINE DRIVE	2
12	51073-18	HOSE ASSEMBLY 3/4 X 94.88	2
13	191105	FUEL FILTER KOHLER, 25-050-42-S (NOT SHOWN)	1

Eastern Wrecker Sales, Inc. - www.easternwrecker.com - 919-553-4038

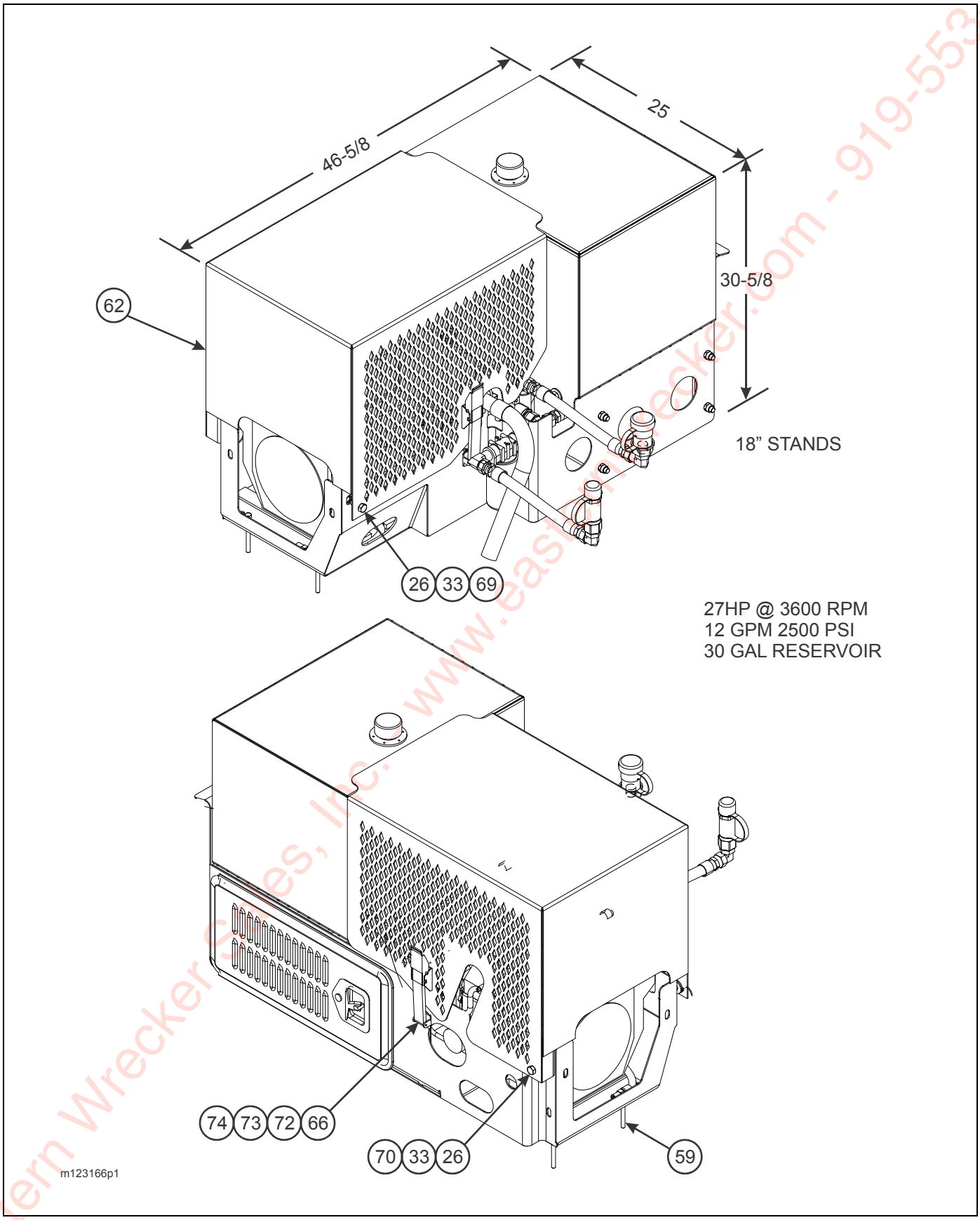

Figure 2-35: Engine Package, Front Mount (1 of 4)

Eastern Wrecker Sales, Inc. www.easternwrecker.com - 919-553-4038

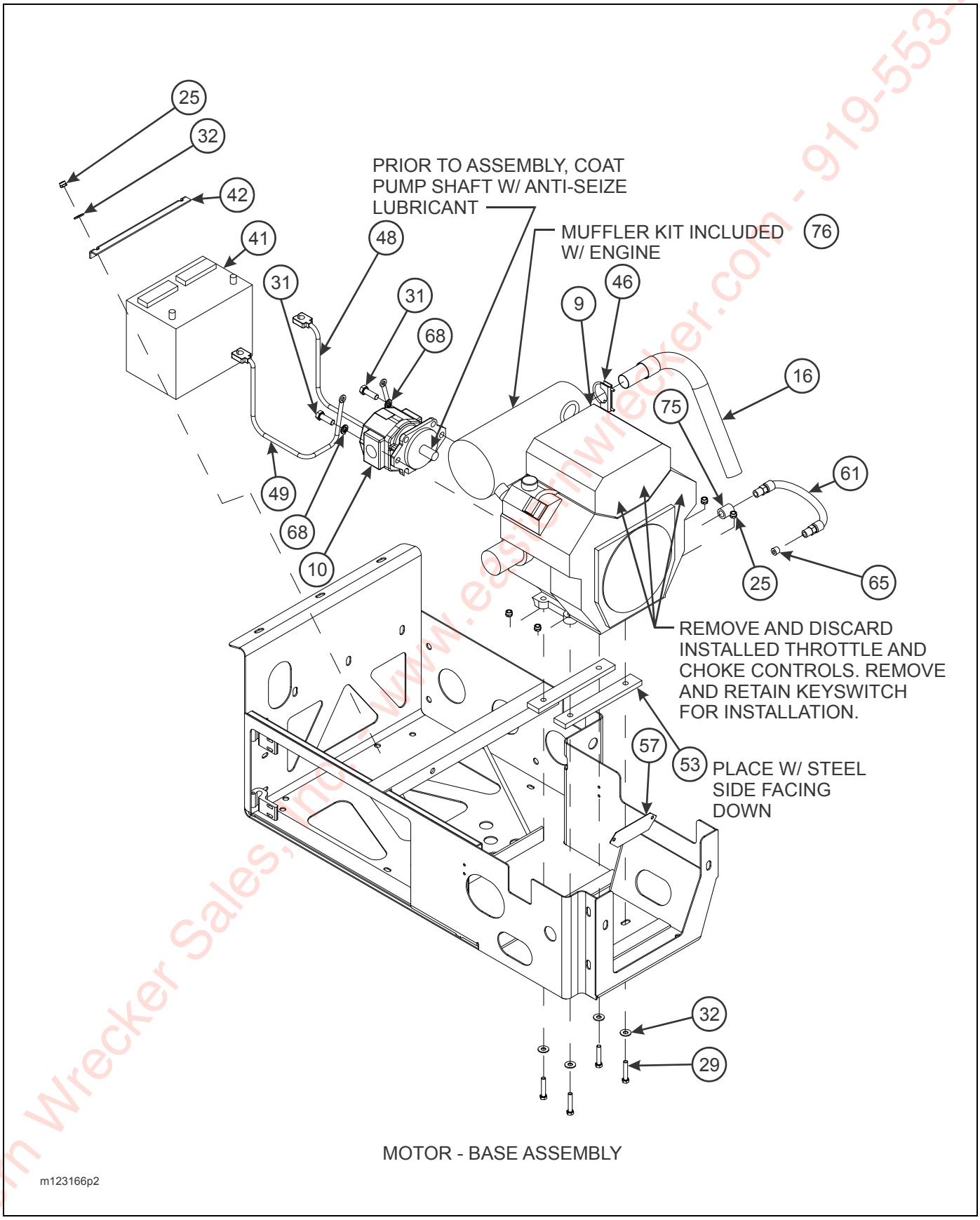

Figure 2-36: Engine Package, Front Mount (2 of 4)

Eastern Wrecker Sales, Inc. - www.easternwrecker.com - 919-553-4038

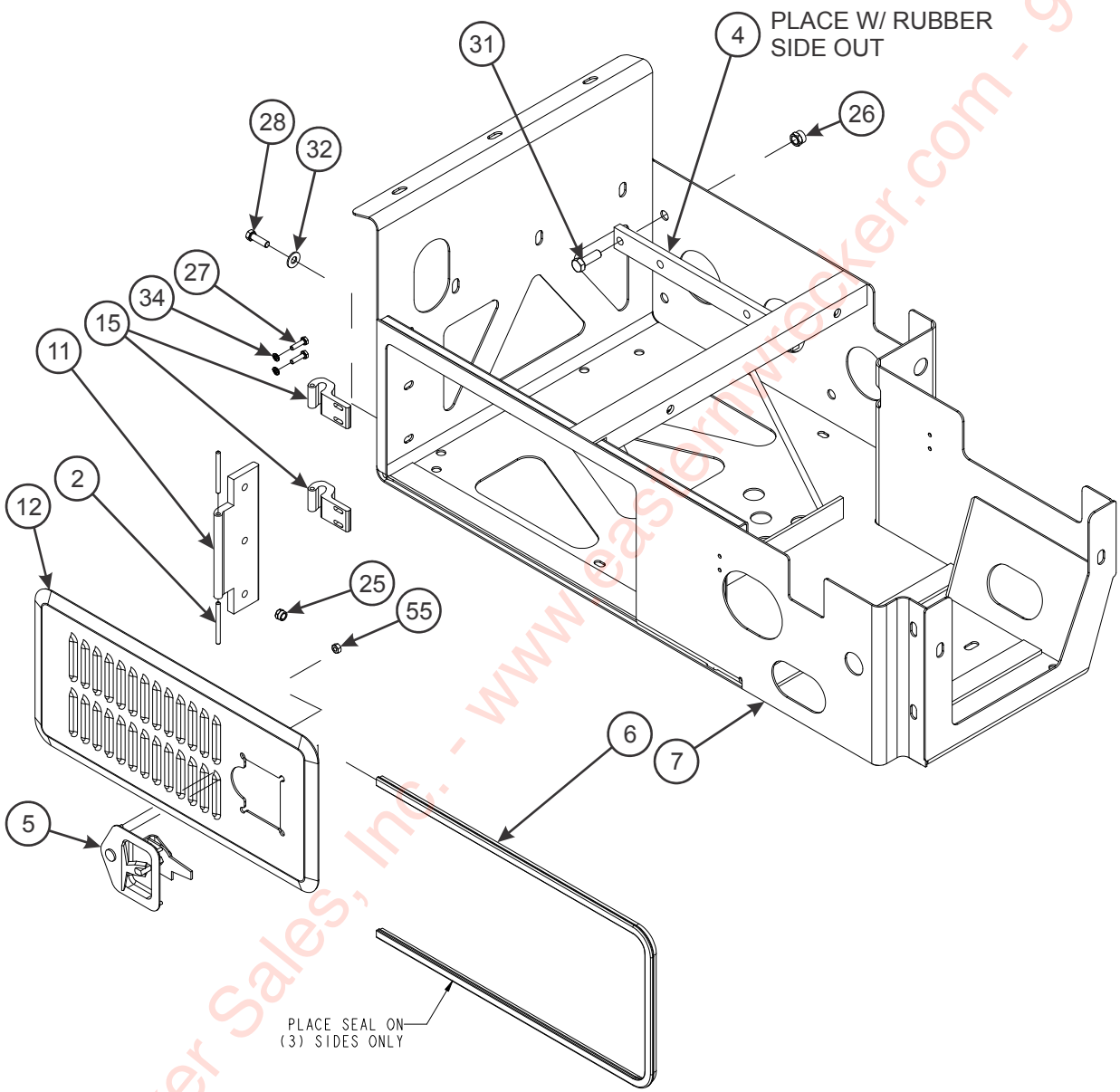

Figure 2-37: Engine Package, Front Mount (3 of 4)

Eastern Wrecker Sales, Inc. - www.easternwrecker.com - 919-553-4038

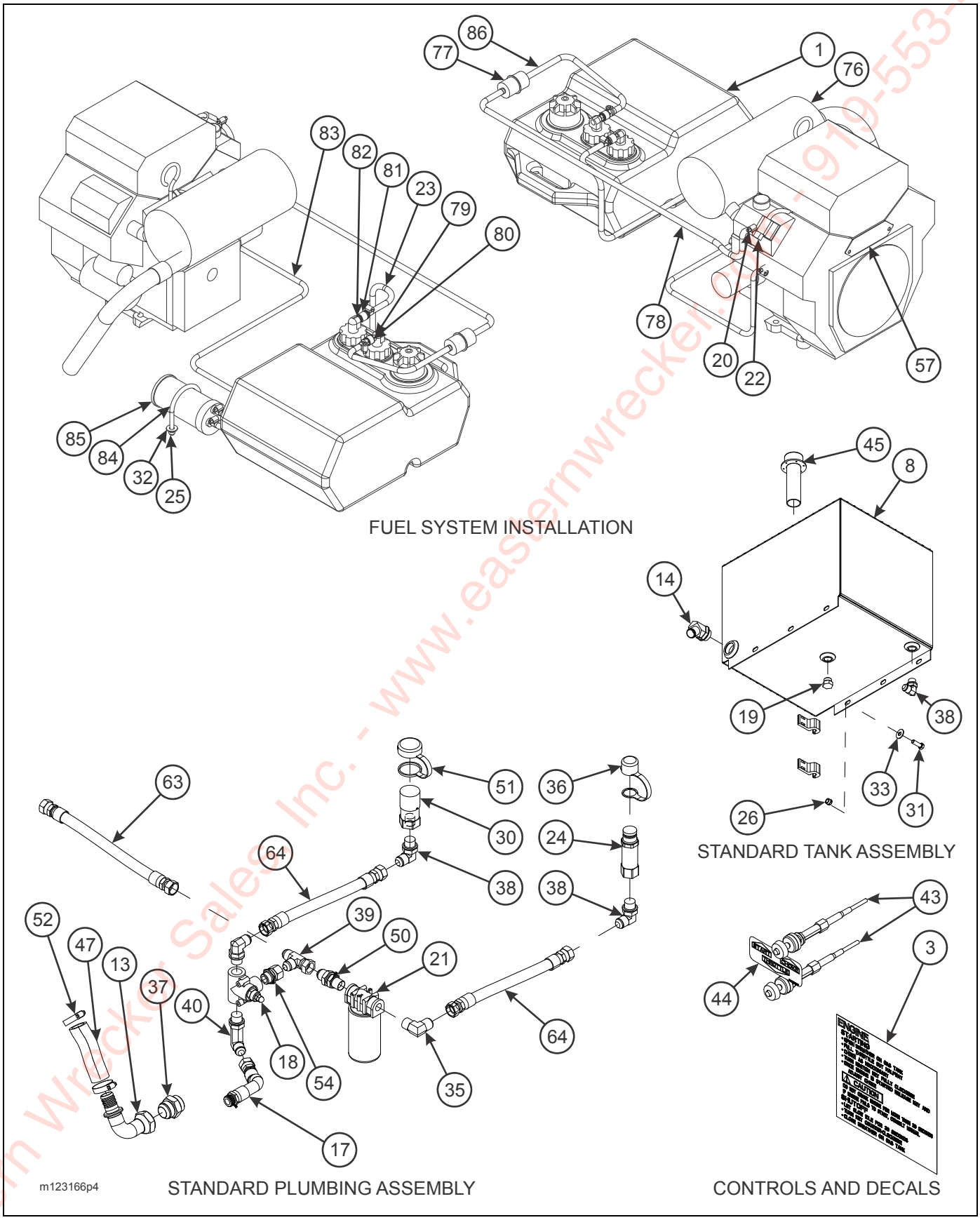

Figure 2-38: Engine Package, Front Mount (4 of 4)

Eastern Wrecker Sales, Inc. - www.easternwrecker.com - 919-553-4038

27 HP GAS ENGINE PACKAGE, UPPER DECK (OPTION)

ITEM	PART NO.	DESCRIPTION	QTY.
	123166	27HP GAS ENGINE PACKAGE	
1	169531	TANK, FUEL PLASTIC 6 GAL LOW PERM	1
2	108601	PIN, DOOR HINGE	2
3	113388	DECAL, ENGINE PACKAGE INSTRUCTIONS	1
4	113856	MOUNT, ENGINE ISOLATOR, KOHLER CH25	2
5	114814	LATCH, FOLDING T LOCKABLE	1
6	114815	SEAL, SPONGE RUBBER TRIM	5
7	120654	MOUNT WELDMENT, ENGINE PACKAGE 25 HP	1
8	129264	HYDRAULIC TANK WELDMENT	1
9	127813	ENGINE, KOHLER 27 HP PUMP MOUNT	1
	3-765-010050	KOHLER IGNITION SWITCH	1
10	115888	PUMP, HYDRAULIC	1
11	116326	HINGE, BASE MOUNT	1
12	116328	MOUNT, DOOR WELDMENT	1
13	116330	FITTING, 90	1
14	117873	FITTING, 45	1
15	119206	HINGE, DOOR	2
16	119445	EXHAUST EXT WELDMENT	1
17	119577	HOSE	1
18	120661	VALVE, HYDRAULIC PRESSURE RELIEF	1
19	900598-12S	PLUG, O-RING	1
20	105-0105	CLAMP, HOSE	6
21	1-295-010001	RETURN LINE FILTER	1
	1-295-010002	FILTER ELEMENT	1
22	1-297-010034-01	FITTING, BR 90 BARB	1
23	1-316-010013	HOSE, 1/4 LOW PRESSURE FUEL LINE	5
24	105479	COUPLER FLAT FACE MALE NOSE	1
25	1-512-010005-05	NUT, HEX LOCK 3/8-16 GRB	15
26	1-512-010005-09	NUT, HEX LOCK 1/2-13 GRB	11
27	1-654-010047-06	SCREW, HEX HEAD CAP 1/4-20 X 1 GR5	4
28	1-654-010051-06	SCREW, HEX HEAD CAP 3/8-16 X 1-1/4 GR5	3
29	1-654-010051-09	SCREW, HEX HEAD CAP 3/8-16 X 2 GR5	6
30	105480	COUPLER, FLAT FACE FEMALE BODY	1
31	1-654-010055-03	SCREW, HEX HEAD CAP 1/2-13 X 1-1/2 GR5	11
32	1-861-010032-11	WASHER, FLAT 3/8W	19
33	1-861-010032-15	WASHER, FLAT 1/2W	13
34	1-861-010034-09	WASHER, SPLIT LOCK 1/4	4
35	2024-12-12S	ELBOW, 90	1
36	105481	COUPLER, DUST CAP MALE	1
37	202702-20-20S	ADAPTER	1
38	2062-12-12S	ADAPTER, 90	4
39	203102-12-12S	ADAPTER, TEE	1
40	206209-12-12S	ADAPTER, 90	1
41	2481X	BATTERY 12V	1
42	3-120-010124	BATTERY CLAMP BRACKET	1
43	128774	CABLE, THROTTLE	2
44	3-573-010506	DECAL, ENGINE CONTROL	1
45	3-162-010001	FILLER-BREATHER-STRAINER ASSEMBLY	1
46	3-182-010028	CLAMP, MUFFLER	1

Eastern Wrecker Sales, Inc. - www.easternwrecker.com - 919-553-4038

27 HP GAS ENGINE PACKAGE, UPPER DECK (OPTION)

ITEM	PART NO.	DESCRIPTION	QTY.
47	3-399-010001006	HOSE, 1-1/4 SUCTION	1
48	514-9045-26	CABLE ASSEMBLY, BATTERY POSITIVE	1
49	514-9073-18	CABLE ASSEMBLY, BATTERY NEGATIVE	1
50	2240-12-12S	ADAPTER, BULKHEAD	1
51	105482	COUPLER, DUST FEMALE	1
52	1-181-010046-7	CLAMP, HOSE	2
53	120659	ISOLATOR, KOHLER 25 HP MOUNT	2
54	120660	ADAPTER	1
55	115877	NUT, HEAVY HEX 1/4-20 GR5	4
57	123014	PLATE, MOTOR FRONT 25 HP	1
58	113544	HARNESS, ENGINE PACKAGE IGNITION (NOT SHOWN)	2
59	108295	SCREW, HEX HEAD CAP 3/8-16 X 4 GR5	2
61	1-397-010312032	HOSE ASSEMBLY 3/8 X 32	1
62	129287	COVER WELDMENT	1
63	1-397-010304018	HOSE ASSEMBLY 3/4 X 18	1
64	1-397-010304060	HOSE ASSEMBLY 3/8 X 60	2
65	1-560-010002-03	PLUG, PIPE 3/8	1
66	1-512-010004-03	NUT, HEX LOCK 10-24 GRA	8
68	1-861-010034-13	WASHER, SPLIT LOCK 1/2	2
69	1-654-010055-02	SCREW, HEX HEAD CAP 1/2-13 X 1-1/4 GR5	1
70	1-654-010055-09	SCREW, HEX HEAD CAP 1/2-13 X 3 GR5	1
72	110-0116	SCREW, RD HEAD CAP 10-24 X 3/4	8
73	110-0253	WASHER, FLAT 3/16	8
74	3-443-010018	LATCH, FLEXIBLE DRAW, LEVER ASSIST	2
75	3/8P COUPL	PIPE COUPLING 3/8 BLACK	1
76	128501	REPLACEMENT MUFFLER KIT	1
77	142270	FUEL FILTER	1
78	169532	HOSE, FUEL 1/4 LOW PERM CARB	5
79	170109	FITTING	1
80	170110	FITTING	1
81	170111	FITTING	1
82	170112	FITTING	1
83	3-316-010008	FUEL HOSE 3/16 ID	5
84	110578	U-BOLT, FENDER MOUNT	1
85	166766	CARBON CANISTER, FUEL TANK	1
86	139553	COUPLER, FUEL TANK	1

Eastern Wrecker Sales, Inc. - www.easternwrecker.com - 919-553-4038

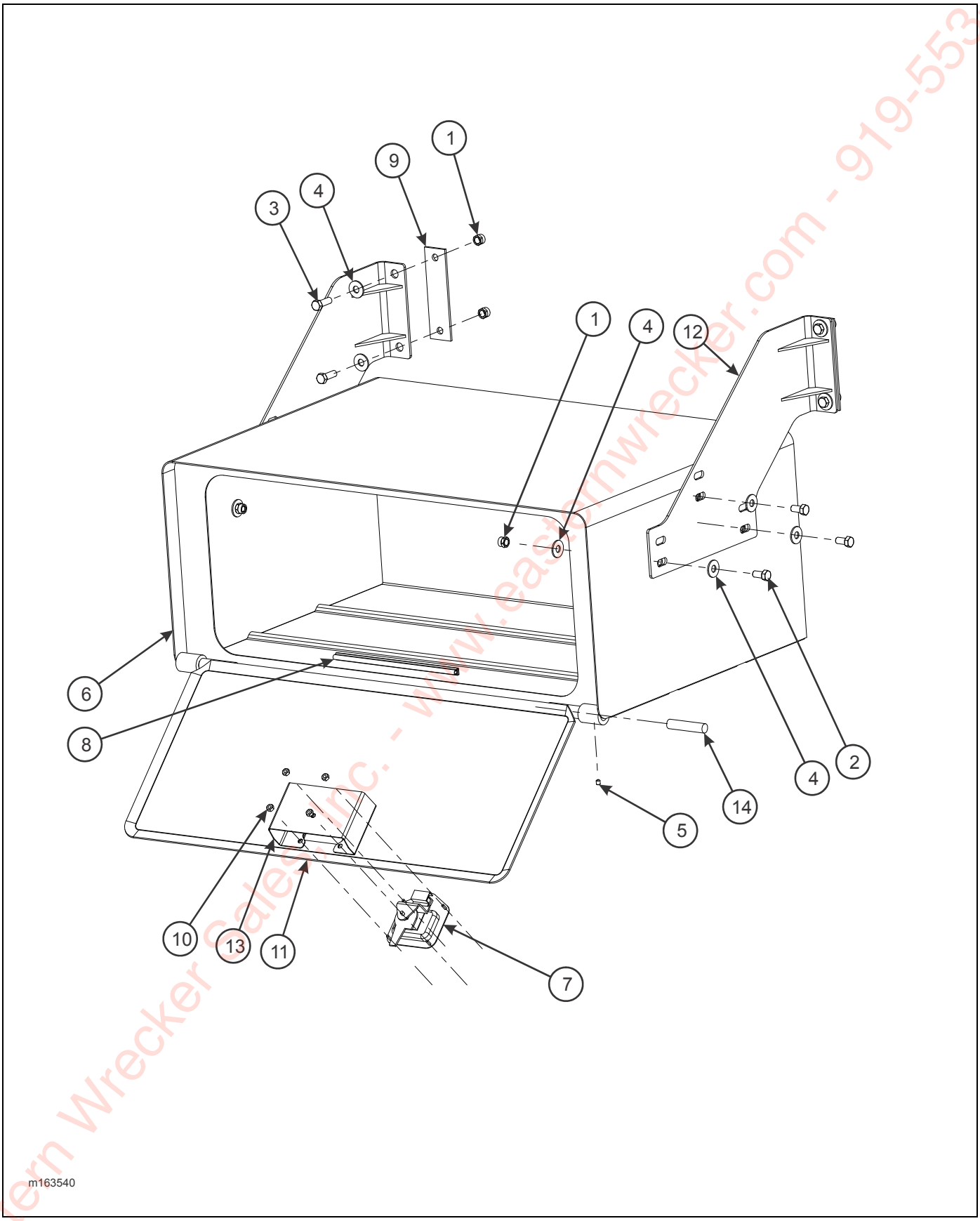

Figure 2-39: Tool Box Installation (Option)

Eastern Wrecker Sales Inc. - www.easternwrecker.com - 919-553-4038

TOOLBOX INSTALLATION (OPTION)

ITEM	PART NO.	DESCRIPTION	QTY.
	163540	TOOLBOX INSTALLATION 42 X 28 X 17	
1	1-512-010005-09	NUT, HEX LOCK 1/2-13 GRB	10
2	1-654-010055-01	SCREW, HEX HEAD CAP 1/2-13 X 1 GR5	6
3	1-654-010055-03	SCREW, HEX HEAD CAP 1/2-13 X 1-1/2 GR5	4
4	1-861-010032-15	WASHER, FLAT 1/2W	16
5	107-0975	SCREW, SET LOCK 5/16-18 X 3/8	2
6	163541	TOOLBOX WELDMENT	1
7	114814	LATCH FOLDING T LOCKABLE	1
8	114815	SEAL, SPONGE RUBBER TRIM	7
9	115843	BAR, BACKUP TOOLBOX MOUNTING	2
10	115877	NUT, HEAVY HEX 1/4-20 GR5	4
11	163544	DOOR WELDMENT STEEL 42 X 28 X 17	1
12	117860	BRACKET, WELDMENT TOOLBOX MOUNTING	2
13	153420	TOOLBOX LATCH SHIELD	1
14	RPRB59004X3H	BAR, ROUND 3/4 X 3-1/2 NYLATRON	2

Eastern Wrecker Sales, Inc. - www.easternwrecker.com - 919-553-4038

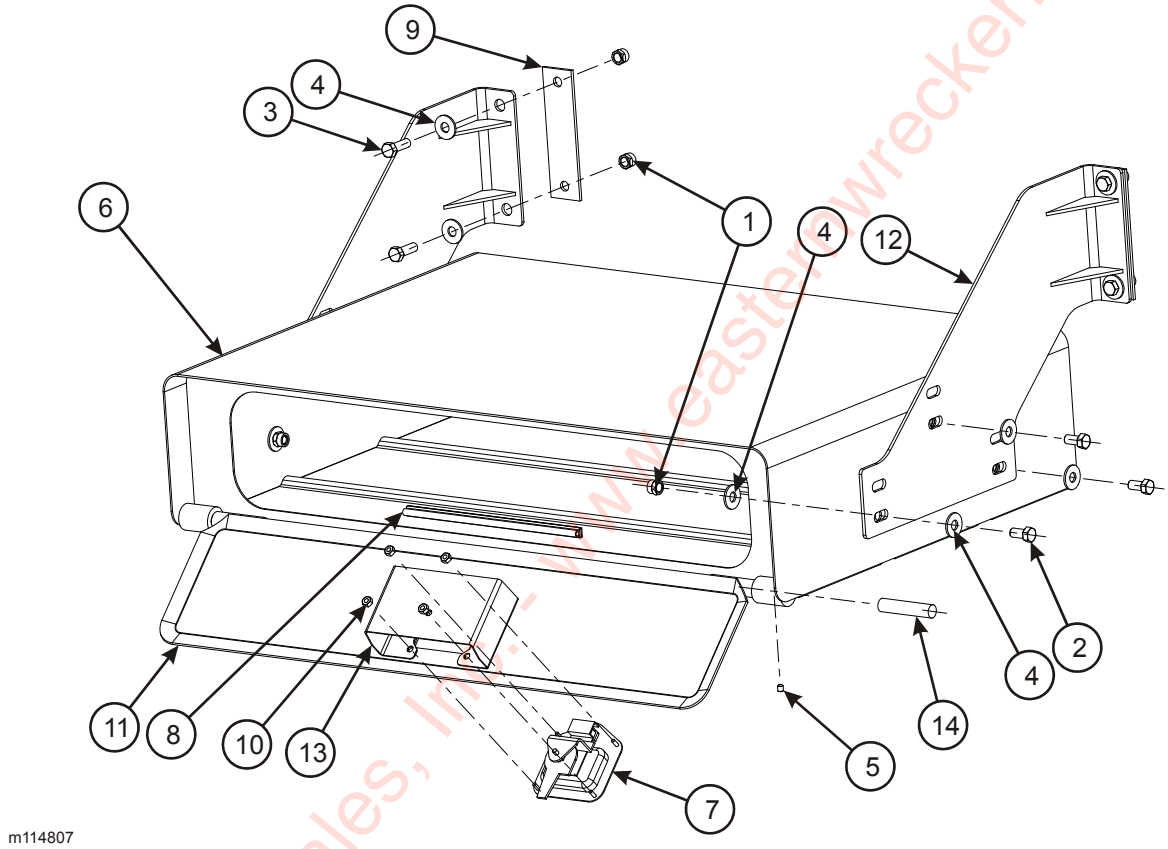

Figure 2-40: Tool Box Installation (Option)

Eastern Wrecker Sales, Inc. - www.easternwrecker.com - 919-553-4038

TOOLBOX INSTALLATION (OPTION)

ITEM	PART NO.	DESCRIPTION	QTY.
	114807	STEEL DOOR TOOLBOX INSTALLATION	
1	1-512-010005-09	NUT, HEX LOCK 1/2-13 GRB	10
2	1-654-010055-01	SCREW, HEX HEAD CAP 1/2-13 X 1 GR5	6
3	1-654-010055-03	SCREW, HEX HEAD CAP 1/2-13 X 1-1/2 GR5	4
4	1-861-010032-15	WASHER, FLAT 1/2W	16
5	107-0975	SCREW, SET LOCK 5/16-18 X 3/8	2
6	114808	TOOLBOX WELDMENT	1
7	114814	LATCH FOLDING T LOCKABLE	1
8	114815	SEAL, SPONGE RUBBER TRIM	7
9	115843	BAR, BACKUP TOOLBOX MOUNTING	2
10	115877	NUT, HEAVY HEX 1/4-20 GR5	4
11	116623	DOOR WELDMENT STEEL TOOLBOX	1
12	117860	BRACKET, WELDMENT TOOLBOX MOUNTING	2
13	153420	TOOLBOX LATCH SHIELD	1
14	RPRB59004X3H	BAR, ROUND 3/4 X 3-1/2 NYLATRON	2

Eastern Wrecker Sales, Inc. - www.easternwrecker.com - 919-553-4038

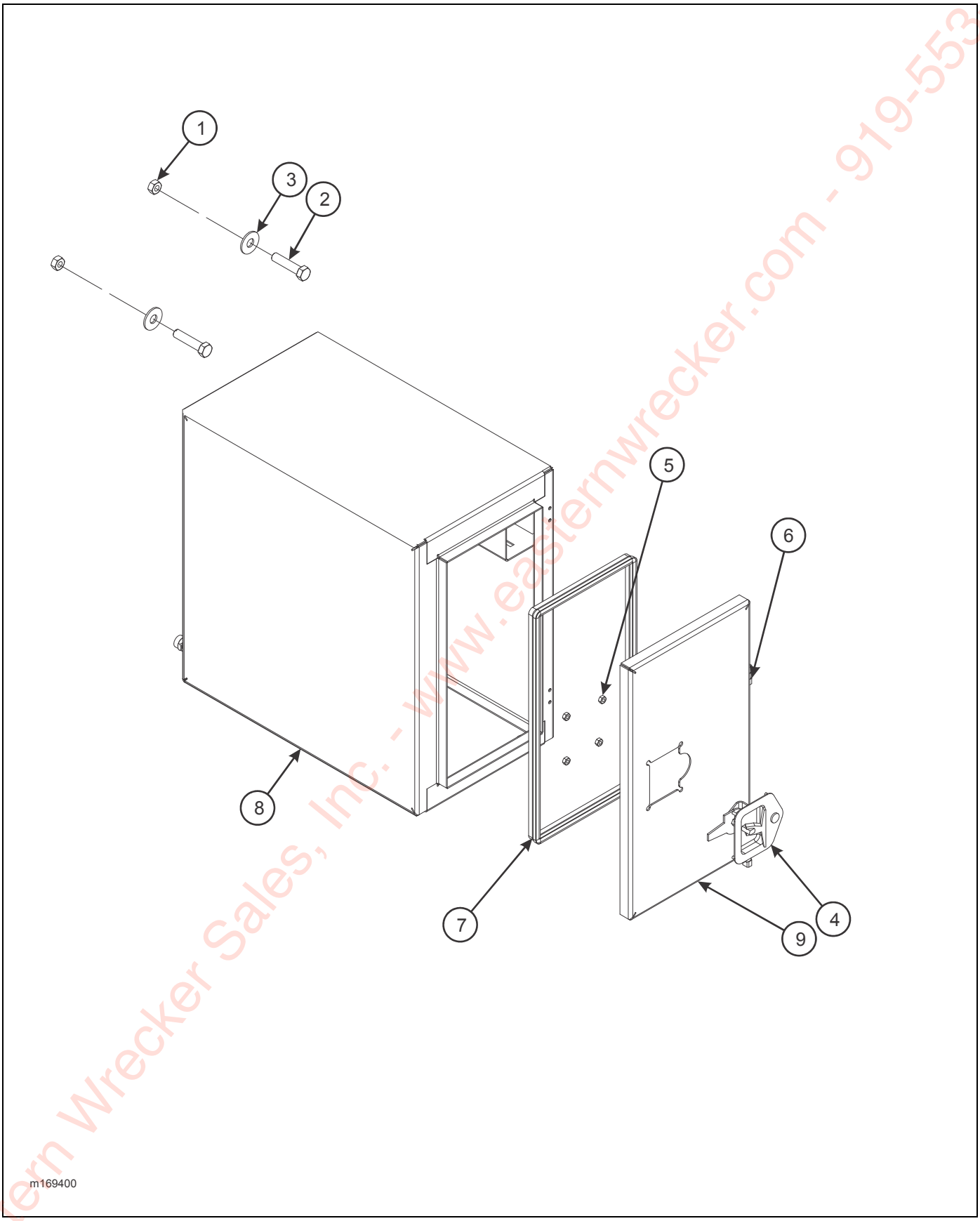

Figure 2-41: Tool Box Installation (Option)

Eastern Wrecker Sales, Inc. - www.easternwrecker.com - 919-553-4038

TOOLBOX INSTALLATION (OPTION)

ITEM	PART NO.	DESCRIPTION	QTY.
	169400	TOOLBOX ASSEMBLY, 24 X 24 X 14	
1	1-512-010005-13	NUT, HEX LOCK 5/8-11 GRB	4
2	1-654-010059-08	SCREW, HEX HEAD CAP 5/8-11 X 2-3/4 GR5	4
3	1-861-010032-19	WASHER, FLAT 5/8W	4
4	114814	LATCH FOLDING T LOCKABLE	1
5	115877	NUT, HEAVY HEX 1/4-20 GR5	4
6	12412408	HINGE, TOOL BOX DOOR	2
7	12412409	SEAL, FLEXIBLE SELF-GRIPPING	AR
8	169401	TOOLBOX WELDMENT 24 X 24 X 14	1
9	169404	LID, TOOLBOX 24 X 14	1

Eastern Wrecker Sales, Inc. - www.easternwrecker.com - 919-553-4038

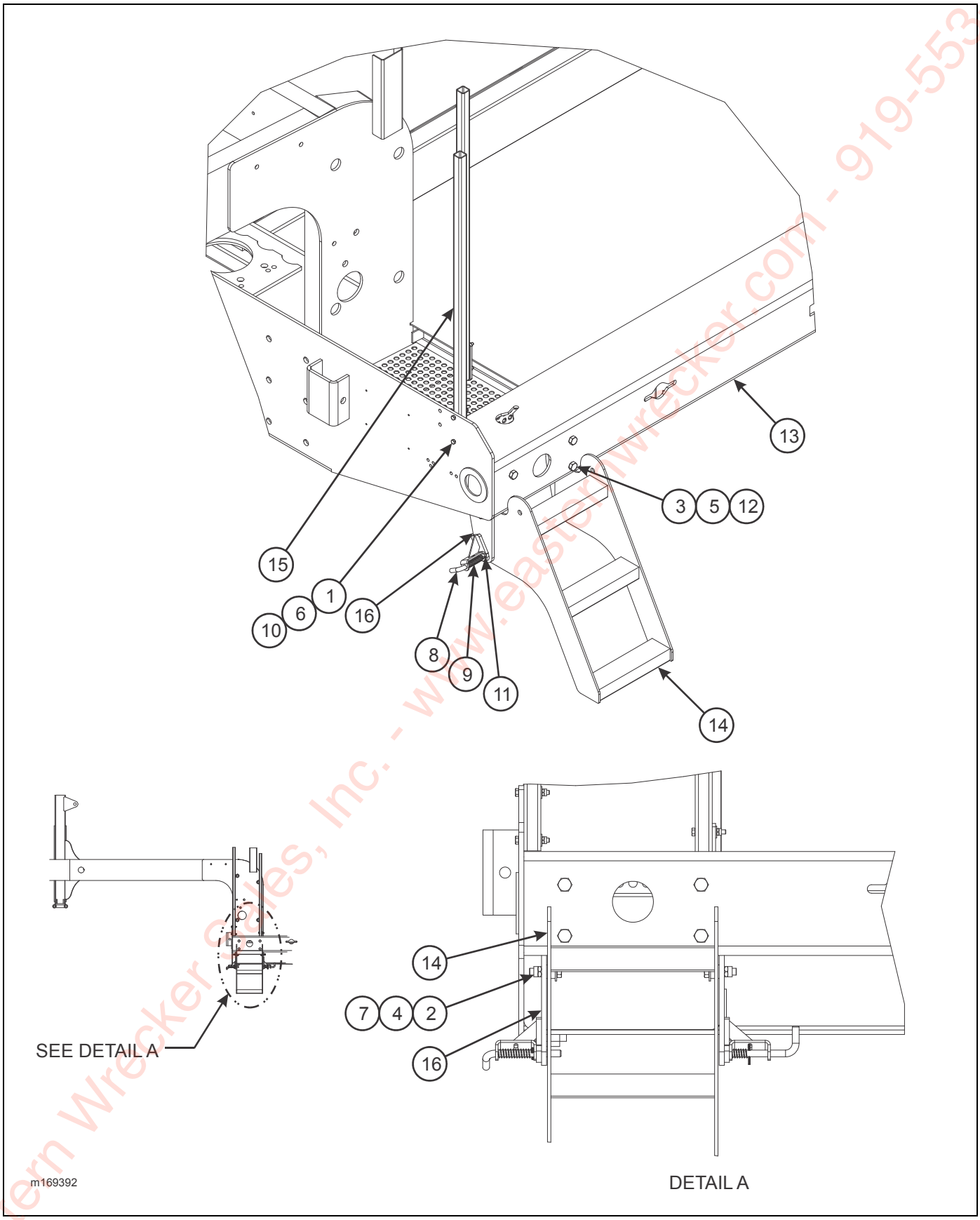

Figure 2-42: Ladder Assembly, Stow-Away Short (Option)

Eastern Wrecker Sales, Inc. - www.easternwrecker.com - 919-553-4038

LADDER ASSEMBLY, STOR-AWAY SHORT (OPTION)

ITEM	PART NO.	DESCRIPTION	QTY.
	169392	LADDER ASSEMBLY, STOR-AWAY SHORT	
1	1-512-010005-03	NUT, HEX LOCK 5/16-18 GRB	4
2	1-512-010005-09	NUT, HEX LOCK 1/2-13 GRB	2
3	1-512-010005-13	NUT, HEX LOCK 5/8-11 GRB	4
4	1-654-010055-05	SCREW, HEX HEAD CAP 1/2-1 X 2 GR5	2
5	1-654-010059-03	SCREW, HEX HEAD CAP 5/8-11 X 1-1/2 GR5	4
6	1-654-010032-09	SCREW, HEX HEAD CAP 3/4-10 X 3 GR8	4
7	1-861-010032-15	WASHER, FLAT 1/2W	4
8	104252	PIN, P/O EXT LOCK	2
9	104253	SPRING, COMPRESSION P/O EXT LOCK	2
10	108628	SCREW, HEX HEAD CAP 5/16-18 X 2-1/4 GR5	4
11	125520	ROLL PIN, SLOTTED 1/8 X 1-1/2	2
12	125799	SPACER, 1 OD X 1/2 ID X .632	2
13	-----	FRAME WELDMENT	REF
14	169389	LADDER WELDMENT, SHORT	1
15	171215	HANDLE, STOWABLE LADDER 42”	2
16	171217	LADDER MOUNT WELDMENT	1

Eastern Wrecker Sales, Inc. - www.easternwrecker.com - 919-553-4038

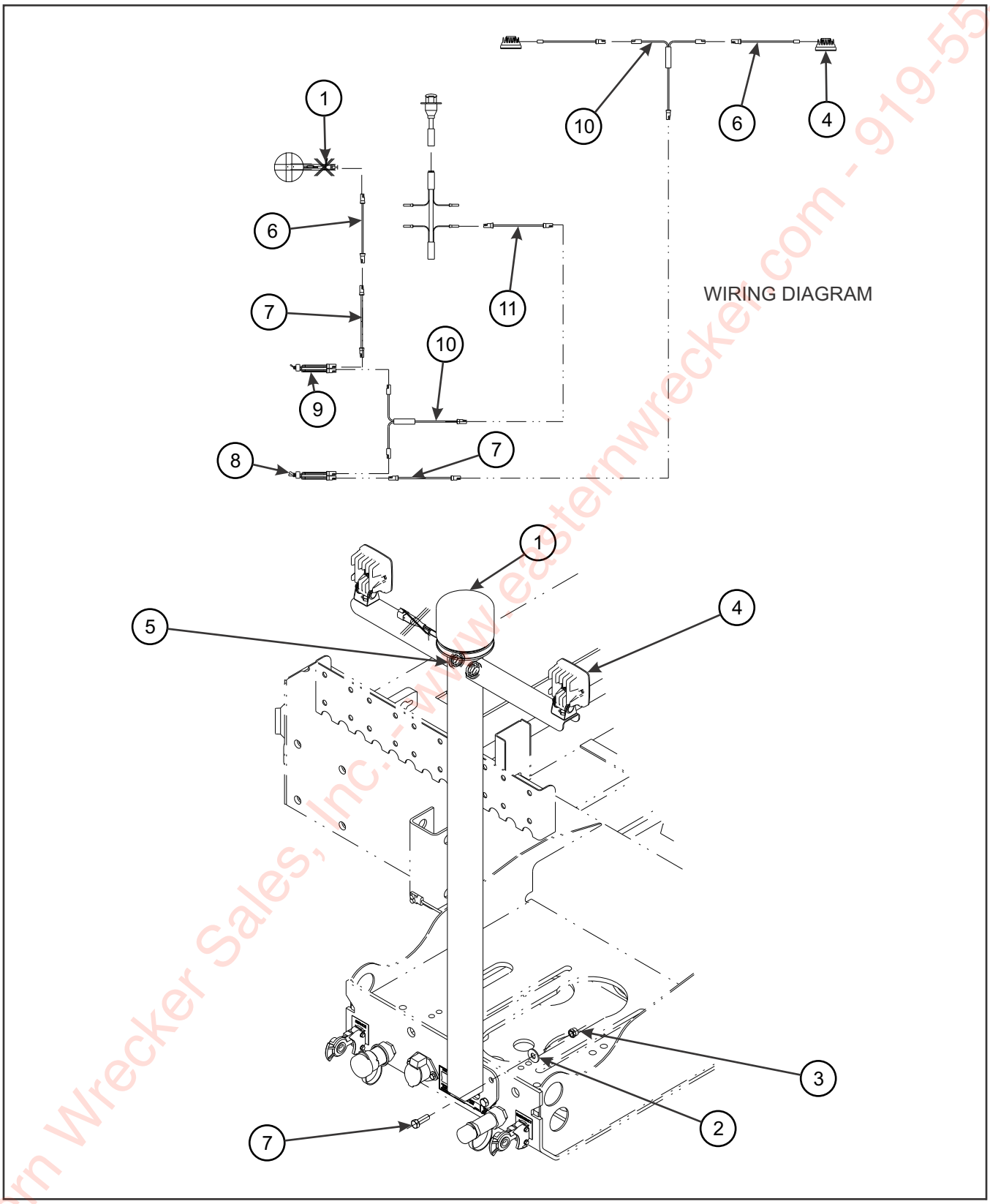

Figure 2-43: Strobe Light and Work Light

Eastern Wrecker Sales, Inc. - www.easternwrecker.com - 919-553-4038

STROBE LIGHT AND WORK LIGHT

ITEM	PART NO.	DESCRIPTION	QTY.
	183671	STROBE LIGHT AND WORK LIGHT INSTALLATION	
1	184501	STROBE LIGHT WITH DEUTSH CONNECTOR	1
2	1-861-010032-15	WASHER, FLAT 1/2	4
3	1-512-010005-09	NUT, HEX LOCK 1/2-13 GRB	4
4	163996	LIGHT LED WHITE FLOOD LAMP	2
5	1-343-010006	GROMMET	1
6	164052	HARNESS, 60” BRANCH WORK LIGHT	2
7	1-654-010055-03	SCREW, HEX HEAD CAP, 1/2-13 X 1-1/2 GR5	4
8	150117	TOGGLE SWITCH	1
9	81264	RUBBER BOOT FOR ELECTRICAL SWITCH	1
10	169853	HARNESS JUMPER T-POWER	
11	3-368-010252	HARNESS ASSEMBLY BULHEAD LIGHT EXTENSION	2

Eastern Wrecker Sales, Inc. - www.easternwrecker.com - 919-553-4038

Eastern Wrecker Sales, Inc. - www.easternwrecker.com - 919-553-4038

Notes:

Eastern Wrecker Sales, Inc. - www.easternwrecker.com - 919-553-4038

Eastern Wrecker Sales, Inc. - www.easternwrecker.com - 919-553-4038

Chapter 3

Numerical Index

Numerics

005-074-00 2-35
005-075-00 2-35
005-079-00 2-35
006-092-00 2-33
006-099-00 2-35
007-113-00 2-33
007-116-00 2-33
007-139-00 2-35
010-052-00 2-35
011100550 2-10
014-056-00 2-35
014-058-00 2-35
034-031-00 2-35
034-032-00 2-35
034-048-00 2-35
034-062-00 2-33
034-188-03 2-35
034-189-03 2-35
036-063-04 2-33
036-115-23 2-33
046-087-00 2-33
046-097-00 2-35
046-131-01 2-33
046-132-00 2-33
046-133-00 2-33
046-135-00 2-33
048-019-00 2-33
048-020-00 2-33
054-033-00 2-33
056-018-00 2-35
069-020-00 2-35
069-053-00 2-33
069-078-00 2-35
071-456-00 2-33
071-462-00 2-33
071-463-00 2-33
071-464-00 2-33
081900295 2-10
100941 . . . . . 2-7, 2-27
100948 2-23
101385 . . . . . 2-27, 2-29
101528 2-29
101848 2-25
101855 2-3
103055 2-3
103056 2-3
104252 2-65
104253 2-65
105-0105 2-56
105479 . . . . . 2-9, 2-56
105480 . . . . . 2-9, 2-56
105481 . . . . . 2-9, 2-56
105482 . . . . . 2-9, 2-57
105483 2-9
105822 2-3
107-0975 . . . . . 2-59, 2-61
108295 2-57

Eastern Wrecker Sales, Inc. - www.easternwrecker.com - 919-553-4038

108601 2-56
108628 2-65
108801 2-21
108802 2-21
110-0116 2-57
110-0253 2-57
110-3494 2-39
110578 2-57
111947 2-37
111948 2-37
111952 2-37
111954 2-37
111956 2-37
111963 2-37
111965 2-37
111966 2-37
111967 2-37
111968 2-37
113388 2-56
113544 2-57
113819 2-35
113820 2-35
113821 2-35
113837 2-37
113856 2-56
114585 . . . . . 2-23, 2-25
114589 2-25
114807 2-61
114808 2-61
114814 . . . . . 2-56, 2-59, 2-61, 2-63
114815 . . . . . 2-56, 2-59, 2-61
115843 . . . . . 2-59, 2-61
115877 . . . . . 2-57, 2-59, 2-61, 2-63
115888 2-56
116326 2-56
116328 2-56
116330 2-56
116623 2-61
117304 2-23
117860 . . . . . 2-59, 2-61
117873 2-56
1-181-010046-7 2-57
118-2659-9 2-23
118631 2-39
119206 2-56
119445 2-56
119577 2-56
120454 2-5
120654 2-56
120659 2-57
120660 2-57
120661 2-56
121003 2-9
121031 2-15
122285 . . . . . 2-9, 2-11
122357 2-11
123014 2-57
123166 . . . . . 2-51, 2-56
12412408 2-63
12412409 2-63
125520 2-65
125799 2-65
126858 . . . . . 2-39, 2-40
126973 2-39
127598 2-39
127813 2-56
128480 2-42
128500 . . . . . 2-43, 2-44
128501 2-57
128550 2-35
128713 2-39
128774 2-56
128973 2-46
128974 2-46
129209 2-43
129214 2-39

Eastern Wrecker Sales, Inc. - www.easternwrecker.com - 919-553-4038

129264 2-56
129287 2-57
1-295-010001 2-56
1-295-010002 2-56
1-297-010007-11 2-21
1-297-010007-12 2-23
1-297-010007-14 2-21
1-297-010008-18 2-23
1-297-010008-26 2-23
1-297-010012-12 2-21
1-297-010012-15 2-21
1-297-010017-03 2-23
1-297-010034-01 2-56
1-298-010001-1 . . . . . 2-5, 2-39
129938 2-45
129942 2-27
130093 2-48
130127 2-39
130346 2-40
130347 2-40
130348 2-40
130349 2-40
130350 2-40
130351 2-40
130352 2-40
130353 2-40
130649 2-31
131061 2-31
131062 2-31
131063 2-31
131064 2-31
131065 2-31
131066 2-37
131067 2-37
131069 2-37
131070 2-37
131096 2-11
131098 2-11
1-316-010013 2-56
131650 2-31
131874 . . . . . 2-23, 2-27, 2-29, 2-31
131875 . . . . . 2-27, 2-31
131876 2-31
1-343-010006 2-67
135316 2-42
136377 2-15
136378 2-15
137935 2-40
138115 2-47
138155 2-29
1-384-010038024 2-23
1-384-010038038 2-23
139345 2-39
139519 2-15
139553 2-57
1-397-010301114 2-9
1-397-010301124 2-9
1-397-010301238 2-9
1-397-010304018 2-57
1-397-010304060 2-57
1-397-010312032 2-57
140083 2-19
140893 2-15
141931 2-35
142270 2-57
142442 2-29
142443 2-29
142444 2-29
142483 2-17
142484 2-17
142485 2-17
142486 2-17
142545 2-29
142553 . . . . . 2-3, 2-29
143103 2-19
143104 2-19

Eastern Wrecker Sales, Inc. - www.easternwrecker.com - 919-553-4038

143105 2-19
143106 2-19
143109 2-19
143110 2-19
143111 2-19
143113 2-19
143114 2-19
143115 2-19
143116 2-19
143117 2-19
143118 2-19
143119 2-19
143120 2-19
143122 2-19
143126 2-19
143916 2-5
144609 2-19
144974 2-35
144976 2-35
144977 2-35
144979 2-35
144980 2-35
144981 2-35
144982 2-35
145010 2-37
146-134-00 2-33
147464 2-25
147473 2-37
147474 2-37
148240 . . . . . 2-15, 2-17
148242 . . . . . 2-9, 2-15
149030 2-17
149526 2-17
149527 2-17
149528 2-17
149529 2-17
149530 2-17
150076 2-19
150117 2-67
1-510-010001 . . . . . 2-9, 2-19, 2-27
1-511-010001-14 2-9
1-512-010002-15 . . . . . 2-7, 2-27
1-512-010004-03 2-57
1-512-010005-01 . . . . . 2-19, 2-39
1-512-010005-03 . . . . . 2-19, 2-65
1-512-010005-05 . . . . . 2-5, 2-7, 2-23, 2-51, 2-56
1-512-010005-09 . . 2-9, 2-51, 2-56, 2-59, 2-61, 2-65, 2-67
1-512-010005-13 . . . . . 2-63, 2-65
1-512-010005-15 . . . . . 2-27, 2-39
1-512-010007-03 2-19
1-512-010007-05 2-27
1-512-010007-09 2-9
1-512-010007-11 2-9
1-512-010007-13 2-39
151533 2-5
151823 2-17
153100 2-19
153102 2-19
153420 . . . . . 2-59, 2-61
153748 2-3
153749 2-3
153795 2-3
153797 2-3
153798 2-3
153799 2-3
153800 2-3
155780 2-3
1-560-010002-03 . . . . . 2-23, 2-57
1-560-010002-04 2-23
1-560-010002-05 2-23
156010 2-3
157129 2-13
161797 2-29
163540 2-59
163541 2-59

Eastern Wrecker Sales, Inc. - www.easterlwrecker.com - 919-553-4038

163544 2-59
163800 2-10
163996 2-67
164052 2-67
1-647-010004255 . . . . . 2-27, 2-29
1-654-010032-09 . . . . . 2-7, 2-65
1-654-010047-06 . . . . . 2-19, 2-56
1-654-010049-06 2-19
1-654-010051-05 . . . . . 2-9, 2-15
1-654-010051-06 . . . . . 2-27, 2-51, 2-56
1-654-010051-07 2-7
1-654-010051-08 2-23
1-654-010051-09 . . . . . 2-5, 2-7, 2-56
1-654-010051-10 2-7
1-654-010051-11 2-7
1-654-010055-01 . . . . . 2-5, 2-59, 2-61
1-654-010055-02 . . . . . 2-39, 2-57
1-654-010055-03 . . . . . 2-56, 2-59, 2-61, 2-67
1-654-010055-04 2-51
1-654-010055-05 2-65
1-654-010055-09 2-57
1-654-010059-03 . . . . . 2-39, 2-65
1-654-010059-05 2-9
1-654-010059-08 2-63
1-654-010061-05 2-27
1-654-010070-07 2-51
1-654-010158-1 2-27
1-656-010003051 2-19
166421 2-41
166766 2-57
167382 2-39
167384 2-39
167404 2-39
167408 2-46
167409 2-46
167853 2-23
168180 2-27
168183 . . . . . 2-19, 2-23, 2-27, 2-29
168186 . . . . . 2-27, 2-29
168199 . . . . . 2-27, 2-29
168200 2-27
168208 2-3
168209 2-3
168211 2-3
168648 2-19
168930 2-39
168931 2-9
168975 2-19
168976 2-19
168982 2-19
169358 2-39
169359 2-39
169362 2-51
169363 2-51
169364 2-51
169365 2-9
169382 2-39
169383 2-46
169384 2-7
169385 2-7
169387 2-7
169389 2-65
169392 2-65
169393 2-7
169394 2-46
169397 2-51
169400 2-63
169401 2-63
169404 2-63
169410 2-19
169531 2-56
169532 2-57
169853 2-67
170109 2-57
170110 2-57
170111 2-57

Eastern Wrecker Sales, Inc. - www.easternwrecker.com - 919-556-4038

170112 2-57
170394 2-49
170395 2-49
170396 2-49
170397 2-49
170404 2-49
170406 2-19
170422 2-19
170430 2-5
170437 2-5
170438 2-5
170439 2-5
170441 2-5
170442 2-5
170449 . . . . . 2-9, 2-19, 2-21
171210 2-44
171211 2-44
171215 2-65
171217 2-65
171220 2-3
171221 2-3
171440 2-5
171442 . . . . . 2-9, 2-13
171443 2-5
171444 2-5
171445 2-9
171659 2-39
171660 2-39
172046 2-13
172047 2-13
172048 2-13
172049 2-13
172050 2-13
172051 2-13
1-796-010003-01 2-23
1-796-010003-02 2-9
1-796-010004-02 2-27
1-822-010001 2-9
1-833-010002 . . . . . 2-21, 2-23
1-833-010003 2-21
183671 2-67
184501 2-67
1-861-010032-07 . . . . . 2-19, 2-27
1-861-010032-09 2-19
1-861-010032-10 . . . . . 2-15, 2-23
1-861-010032-11 . . . 2-5, 2-7, 2-23, 2-27, 2-51, 2-56
1-861-010032-14 2-9
1-861-010032-15 . 2-51, 2-56, 2-59, 2-61, 2-65, 2-67
1-861-010032-19 . . . . . 2-9, 2-63
1-861-010032-21 . . . . . 2-7, 2-39
1-861-010034-07 2-19
1-861-010034-09 . . . . . 2-27, 2-56
1-861-010034-11 2-15
1-861-010034-13 . . . . . 2-5, 2-39, 2-57
1-861-010034-15 2-39
1-861-010059-21 2-9
194117 2-41
194118 2-41
194119 2-41
194120 2-41
194121 2-41
194122 2-41
194123 2-41
194124 2-41
194301 2-40
194302 2-40
194303 2-40
194304 2-40
194305 2-41
194306 2-41
194307 2-41
194308 2-41
194309 2-41
194310 2-41
2021-2-4 2-29
2024-12-12S 2-56

Eastern Wrecker Sales, Inc. - www.easternwrecker.com - 919-553-4038

2024-2-4S 2-27, 2-29
202702-10-8S 2-39
202702-20-20S 2-56
202702-8-8S 2-9
203102-12-12S 2-56
206209-12-12S 2-56
2062-10-12S 2-15
2062-12-12S 2-56
2062-8-8S 2-5, 2-9
2083-8-8S 2-23
2088-6-6S 2-23
2089-6-6S 2-23
2-181-010001 2-19
2240-12-12S 2-57
2481X 2-56
3/8P COUPL 2-57
3-102-010027 2-9
3-120-010124 2-56
3-162-010001 2-56
3-174-010038 2-42
3-174-010039 . . . . . 2-42, 2-43, 2-45
3-174-010042 2-46
3-182-010028 2-56
3-187-010019 2-7
3-242-010099 . . . . . 2-5, 2-9, 2-10
3-311-010147 2-6
3-316-010008 2-57
3-360-010072 2-15
3-360-010090 2-15
3-368-010252 . . . . . 2-19, 2-67
3-399-010001006 2-57
3-423-010035 2-7
3-423-010042 2-7
3-443-010018 2-57
346SL 2-6
3-482-010575 2-15
3-485-010001 2-27
3-573-010031 2-3
3-573-010038 2-3
3-573-010057 2-3
3-573-010189 2-3
3-573-010210 2-3
3-573-010377 2-3
3-573-010506 2-56
3-755-010189-03 2-27
3-755-010189-1 2-27
3-762-010017 2-27
3-765-010050 2-56
3-821-010005 2-27
3-846-010154 2-5
3-870-010097 2-37
51073-18 2-51
514-9045-26 2-57
514-9073-18 2-57
516-22PTL 2-49
55B61 2-21
55B61-6 2-21
55B61-7 2-21
56D4 2-23
61258 2-39
622-3511-008 2-27
660580002 2-17
660580003 2-17
660580004 2-17
660580005 2-17
758-181 2-23
7HCGHT500 . . . . . 2-43, 2-45
805-2 2-23
81264 2-67
900598-12S 2-56

B

B3-725-003 2-6

Eastern Wrecker Sales, Inc. - www.easternwrecker.com - 919-553-4038

K

K71-082-00 . . . . . *2-33*
K71-101-00 . . . . . *2-35*
K71-169-00 . . . . . *2-33*
K71-170-00 . . . . . *2-33*
K71-460-00 . . . . . *2-35*

R

RPRB59004X3H *2-59*, *2-61*

T

TR573 . . . . . *2-37*

Eastern Wrecker Sales, Inc. - www.easternwrecker.com - 919-553-4038

Eastern Wrecker Sales, Inc. - www.easternwrecker.com - 919-553-4038

Equipment from Landoll Corporation is built to exacting standards ensured by ISO 9001registration at all Landoll manufacturing facilities.

Model 342 Chain Drive Semitrailer Parts Manual

Re-Order Part Number F-636-1012

LANDOLL CORPORATION

1900 North Street

Marysville, Kansas 66508

(785) 562-5381

800-428-5655 ~ WWW.LANDOLL.COM

Copyright 2010. Landoll Corporation

"All rights reserved, including the right to reproduce this material or portions thereof in any form"

Eastern Wrecker Sales, Inc. - www.easternwrecker.com - 919-553-4038