# HDR 1000
# HEAVY DUTY ROTATOR
# PARTS MANUAL

JERR-DAN®

An Oshkosh Corporation Company

13224 Fountainhead Plaza
Hagerstown, MD 21742
Phone (717) 597-7111
www.jerr-dan.com

5-376-000164
Rev 0 - July 1, 2013

© 2013 Jerr-Dan Corporation. All Rights Reserved

Eastern Wrecker Sales, Inc.
Clayton, NC 919-553-4038
www.easternwrecker.com

Eastern Wrecker Sales, Inc.
Clayton, NC
919-553-4038
www.easternwrecker.com

This manual covers the following Jerr-Dan Models:

HDR1000 50 Ton Rotator

Jerr-Dan Corporation strives to provide information that is accurate, complete and useful. Descriptions and illustrative material contained within this manual are as accurate as known at the time of publication and are subject to change, without notice, as a result of continuous product improvements. Jerr-Dan reserves the right to amend the information in this document at any time without prior notice.

Information contained in this manual reflects how this vehicle was built at the factory. Modifications or additions by the distributor or owner are not reflected in this manual.

This parts manual does not include service parts information for the commercial chassis (IHC, Ford, GM, etc.).
That information is provided by the chassis manufacturer.

When ordering parts, please refer to your unit's Serial Number and Model Number. This information is be found on the aluminum tag riveted to the inside of the driver's side rear compartment of the main body.

Additional or replacement manuals can be ordered by calling Jerr-Dan Parts at 717-597-7111.
Price and availability will be quoted at time of the request.

Please report comments and/or errors by contacting Jerr-Dan Corporation's Technical Publications Department by e-mail at technicalpublications@jerr-dan.com or by FAX on 717-485-7162.

Manufactured under one or more of the following patents: 5,575,606; 5,672,042; 5,697,741; 5,713,714; 5,722,810; 5,782,596; 5,839,775 and 6,315,515 B1 with other Patents Pending.

Jerr-Dan and the Jerr-Dan logo are registered trademarks and Run Hard is a service mark of Jerr-Dan Corporation, Greencastle, PA USA.

The material in this document is confidential and the property of Jerr-Dan Corporation. No part of this document may be photocopied, Reproduced or translated to another language without the express written consent of Jerr-Dan Corporation.

Eastern Wrecker Sales, Inc.
Clayton, NC 919-553-4038
www.easternwrecker.com

**THIS PAGE INTENTIONALLY LEFT BLANK**

Eastern Wrecker Sales, Inc.
919-553-4038
Clayton, NC
www.easternwrecker.com

## TABLE OF CONTENTS


Subframe Installation....8
Hydraulic Tube Installation....10
Hydraulic Tank Installation....14
Hydraulic Tank Assembly - 1001127996....16
Oil Tank Cooler - 1001151763....18
Outrigger/Stabilizer Installation....20
Outrigger/Stabilizer Lift Cylinder - 1001127311....22
Outrigger/Stabilizer Assembly....24
Outrigger/Stabilizer Extension Cylinder - 1001127312....26
Rear Spade Installation....28
Spade Cylinder Assembly - 7320000006....30
Tail Board D-Ring Installation....32
Slew Bearing Installation....34
Slew Drive Installation....36
Swivel Installation....38
Swivel Assembly, Hydraulic/Electric - 1001129628....40
TurnTable Installation....42
House Lock Installation....44
Wrecker Boom Installation - 3 Piece....50
Wrecker Boom Lift Cylinder - 1001127313....52
Wrecker Boom Assembly - 3 Piece....54
Extension Cylinder assembly - 7320000085....56
Winch Installation - 2 Speed 50K Ramsey....58
Ramsey 50K Winch - 1001128323 & 1001129495....60
Ramsey Winch Cable Tensioner Assembly - 70050360....62
Winch Installation - 2 Speed 50K Dp....64
DP Winch 50K - Motor End Installation....66
DP Winch 50K - Drum Installation....68
DP Winch 50K - Gear End Installation....70
DP Winch 50K - Input Shaft....72
DP Winch 50K - Base Mount Installation....74
DP Winch 50K - Gear End Cover Installation....76
DP Winch 50K - Cable Hold Down Kit....78
Underlift Boom Installation - 30,000/35,000 LB....80
Underlift Lift Cylinder Assembly - 7320000040....82
Underlift Boom Installation - 53,000/56,500 LB....84
Underlift Lift Cylinder Assembly - 7320000063....86
Underlift Installation - 30,000/35,000 LB....88
Underlift Tilt Cylinder Assembly - 7320000039....90
Underlift Assembly - 3170000433 - 30,000 LB....92
Underlift Extension Cylinder Assembly - 7320000076....94
Underlift Assembly - 3170000220 - 35,000 LB....96
Underlift Extension Cylinder Assembly - 7320000042....98
Underlift Installation - 53,000/56,500 LB....100
Underlift Tilt Cylinder Assembly - 7320000096....102
Underlift Assembly - 3507100001 - 53,000 LB....104
Underlift Extension Cylinder Assembly - 7320000026....106
Underlift Assembly - 3170000407 - 56,500 LB....108
Underlift Extension Cylinder Assembly - 7320000068....110
Drag Winch Installation....112
DP Winch 35K - Cable Winch Drum Installation....114
DP Winch 35K - Gear End Installation....116
DP Winch 35K - Input Shaft Installation....118
DP Winch 35K - Base Mount Installation....120
DP Winch 35K - Gear End Cover Installation....122
DP Winch - Motor End Installation....124
DP Winch - Cable Hold Down Kit....126
Trailer Auxiliary Installation....128
Underlift Tools - Frame Forks....130
Underlift Tools - 14,000 LB Tire Lift....132
Underlift Tools - 25,000 LB Tire Lift....134
Underlift Tools - Fifth Wheel Attachment....136
Underlift Tools - Pintle Hook....138
Crosstube Installation....140
Rear Body Installation....142
Mid Body Installation....144
Body Panel Assembly - Rear LH....146
Body Panel Assembly - Rear RH....148
Body Panel Assembly - Mid LH....150
Body Panel Assembly - Mid RH....152
Body Door And Hardware Assembly - Rear LH....154
Body Door And Hardware Assembly - Rear RH....156
Body Door And Hardware Assembly - Mid LH....158
Body Door And Hardware Assembly - Mid RH....160
49” Tunnel Tool Compartment Installation....162
49” Tunnel Tool Compartment Panel Assembly....164
49” Tunnel Tool Compartment Door and Hardware Assembly....166
49” Tunnel Tool Compartment Fender Flare Assembly....168


Eastern Wrecker Sales, Inc.
Clayton, NC 919-553-4038
www.easternwrecker.com

# TABLE OF CONTENTS

Fender Flare Installation....170
Mudflap Installation....172
Tool Holder Bracket Installation....174
25K Tire Lift Storage Brackets For 49” Tunnel Tool Compartment....176
Under Tool Compartment Drawer Installation....180
Under Tool Compartment Drawer Assembly....182
Body Lighting & Wiring Installation....184
Back-Up Alarm Installation....194
Hydraulic Installation....196
Control Valve - 1001127671....206
Controls Installation - 9 Section....210
Outrigger Controls Installation....216
CS24 Series PTO Installation....220
82 Series PTO Installation....222
Wireless Remote Installation....224
Air Installation....226
Air Valve - 1001129800....230
M-Plex Electrical Installation....232
Emergency Stop Installation....236
Headboard Assembly - 1001150180....238
Headboard Installation - 1001150422....240
Wing Light Installation - 1001129862....242
Lightbar 72” LED - WHELEN....244
Upper Hook-Up Lights Installation....246
Lower Hook-Up Lights Installation....248
Upper Work Lights Installation....250
Wrecker Boom Lights Installation....252
Outrigger Light Installation....254
Underlift Light Installation....256
Decal Installation....258
Hydraulic Schematic....262
Air Schematic....267
Part Number Index....268

Eastern Wrecker Sales, Inc.
Clayton, NC 919-553-4038
www.easternwrecker.com

## TABLE OF CONTENTS

THIS PAGE INTENTIONALLY LEFT BLANK

Eastern Wrecker Sales, Inc.
919-553-4038
Clayton, NC
www.easternwrecker.com

## SUBFRAME INSTALLATION

| ITEM | PART NO. | DESCRIPTION | QTY |
|---|---|---|---|
| 1 | 1001135645 | Frame Weldment | 1 |
| 2 | 7120000062 | Huck Bolt, 0.75” Dia x 1.50-2.00” | 58 |
| 3 | 7293000006 | Huck Collar, 0.75 | 58 |
| 4 | 1001129777* | Shim | 4 |
| 5 | 1001129778* | Shim | 2 |

* Also Available In Shim Kit - 1001129786

Eastern Wrecker Sales, Inc.
919-553-4038
Clayton, NC
www.easternwrecker.com

## SUBFRAME INSTALLATION

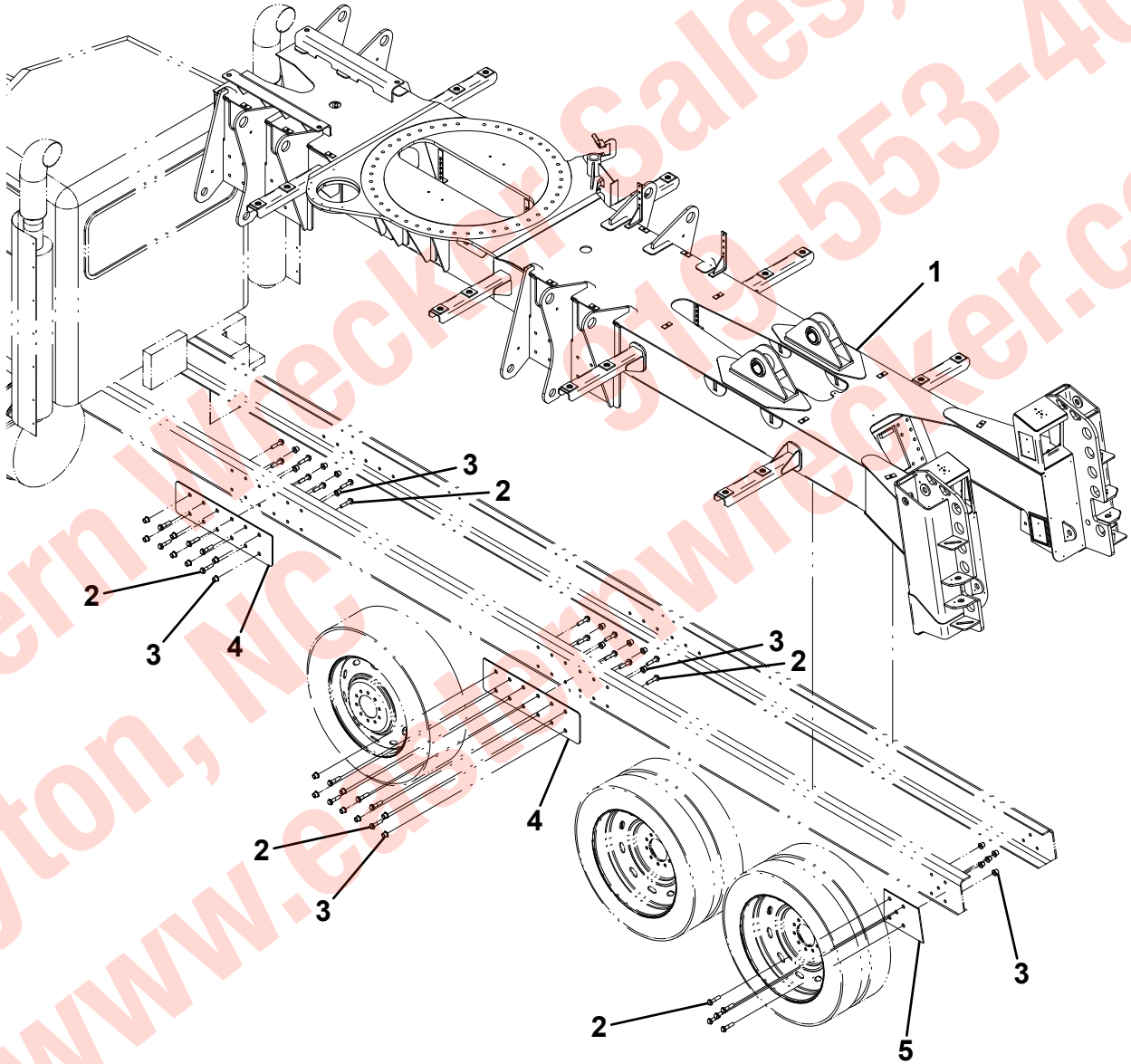


Eastern Wrecker Sales, Inc.
Clayton, NC 919-553-4038
www.easternwrecker.com

## HYDRAULIC TUBE INSTALLATION

| ITEM | PART NO. | DESCRIPTION | QTY |
|---|---|---|---|
| 1 | 1001134739 | Pipe, Tube Assembly | 11 |
| 2 | 1001134740 | Pipe, Tube Assembly | 2 |
| 3 | 7209000033 | Bushing | 12 |
| 4 | 1001130395 | Pipe, Tube Assembly | 3 |
| 5 | 7274000030 | Clamp Assembly | 12 |
| 6 | 7115150664 | Bolt, 0.31”-18NC x 0.75” | 52 |
| 7 | 7661000022 | Stacking Nut | 60 |
| 8 | 7007000036 | Thread Adapter | 20 |
| 9 | 7950150000 | Lockwasher, 0.31” ID | 56 |
| 10 | 7115150650 | Capscrew, 0.31”-18NC x 0.75” | 56 |
| 11 | 7209000023 | Bushing | 62 |
| 12 | 7209000024 | Bushing | 16 |
| 13 | 7274000088 | Clamp Assembly | 4 |
| 14 | 7661000027 | Stacking Nut | 16 |
| 15 | 1001133571 | Pipe, Tube Assembly | 6 |

Eastern Wrecker Sales, Inc.
Clayton, NC
919-553-4038
www.easternwrecker.com

## HYDRAULIC TUBE INSTALLATION

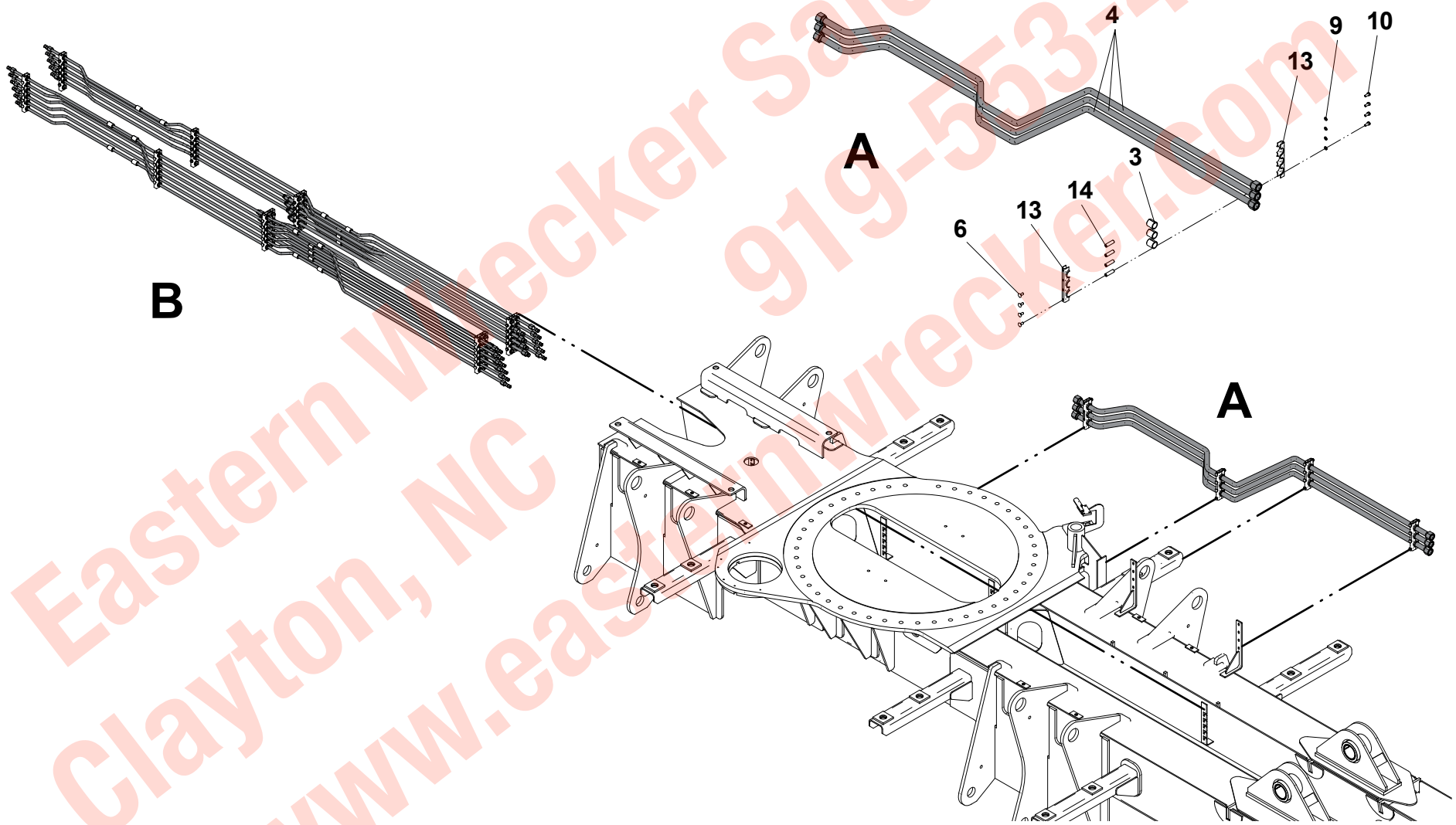


Eastern Wrecker Sales, Inc.
919-553-4038
Clayton, NC
www.easternwrecker.com

## HYDRAULIC TUBE INSTALLATION

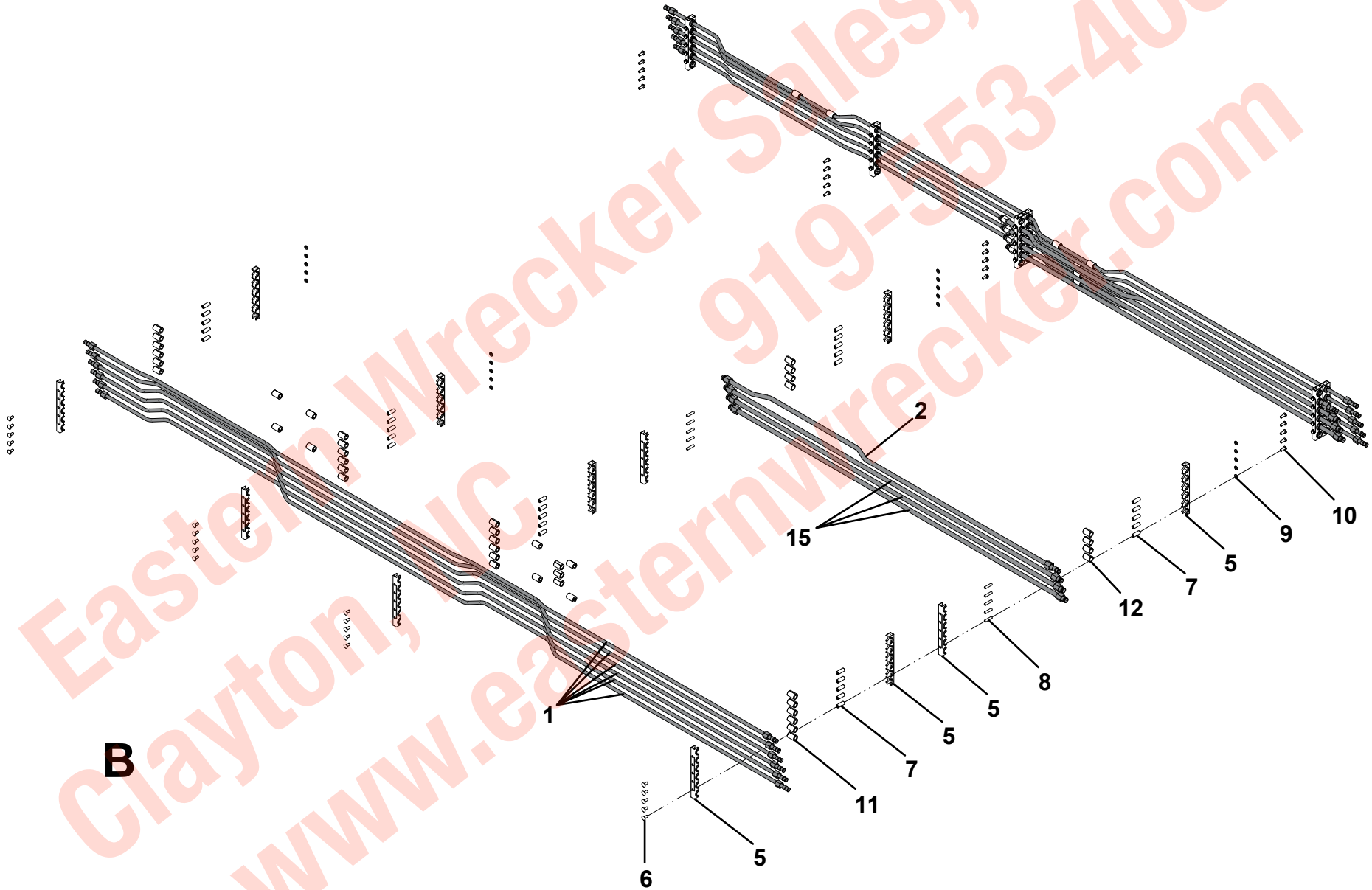


Eastern Wrecker Sales, Inc.
Clayton, NC 919-553-4038
www.easternwrecker.com

## HYDRAULIC TUBE INSTALLATION

THIS PAGE INTENTIONALLY LEFT BLANK

Eastern Wrecker Sales, Inc.
919-553-4038
Clayton, NC
www.easternwrecker.com

## HYDRAULIC TANK INSTALLATION

| ITEM | PART NO. | DESCRIPTION | QTY |
|---|---|---|---|
| 1 | 1001127996 | Tank, Hydraulic | 1 |
| 2 | 1001127315 | Radiator, Remote Oil Cooler - NPT | 1 |
| | 1001151763 | Radiator, Remote Oil Cooler - O-Ring | |
| 3 | 1001130437 | Mount, Hydraulic Oil Cooler | 2 |
| 4 | 7663000006 | Mount, Center Bonded | 4 |
| 5 | 7949000015 | Washer, Head | 4 |
| 6 | 7949000016 | Washer, Tail | 4 |
| 7 | 7660182601 | Locknut, 0.50”-13NC | 4 |
| 8 | 7115181850 | Capscrew, 0.50”-13NC x 2.25” | 4 |
| 9 | 7950180141 | Flatwasher, 0.50” ID | 4 |
| 10 | 7115160850 | Capscrew, 0.38”-16NC x 1.00” | 12 |
| 11 | 7950160161 | Flatwasher, 0.38” ID | 20 |
| 12 | 7660162601 | Locknut, 0.38”-16NC | 12 |
| 13 | 1001144068 | Harness | 1 |
| 14 | 1001144012 | Harness | 2 |
| 15 | 7740000003 | Relay | 1 |
| 16 | 7790100856 | Screw, Self-Tapping, #10 x 0.50” | 1 |

Eastern Wrecker Sales, Inc.
919-553-4038
Clayton, NC
www.easternwrecker.com

## HYDRAULIC TANK INSTALLATION

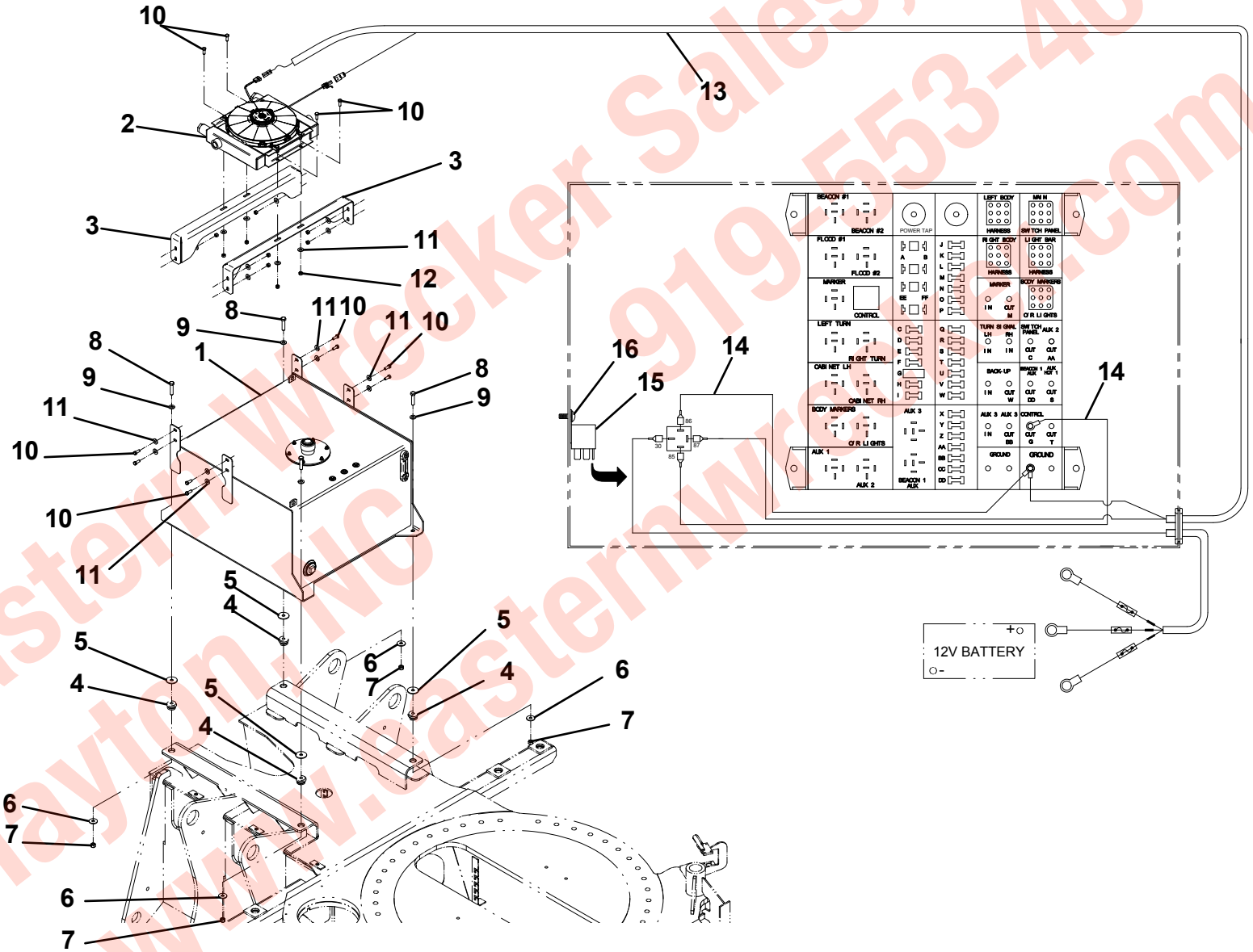


Eastern Wrecker Sales, Inc.
Clayton, NC 919-553-4038
www.easternwrecker.com

## HYDRAULIC TANK ASSEMBLY - 1001127996

| ITEM | PART NO. | DESCRIPTION | QTY |
|---|---|---|---|
| 1 | 70050386 | Tank | 1 |
| 2 | 70050387 | Gasket | 1 |
| 3 | 70050388 | Cover Assembly | 1 |
| 4 | 83304173 | Washer, 0.25” ID | 6 |
| 5 | 83304174 | Nut, 0.25” | 6 |
| 6 | 70050389 | Magnetic Plug | 1 |
| 7 | 7024445 | Strainer | 1 |
| 8 | 7024444 | Vented Fill Cap | 1 |
| 9 | 70050390 | Plug | 2 |
| 10 | 70050391 | Sight Gauge | 1 |

Eastern Wrecker Sales, Inc.
919-553-4038
Clayton, NC
www.easternwrecker.com

## HYDRAULIC TANK ASSEMBLY - 1001127996

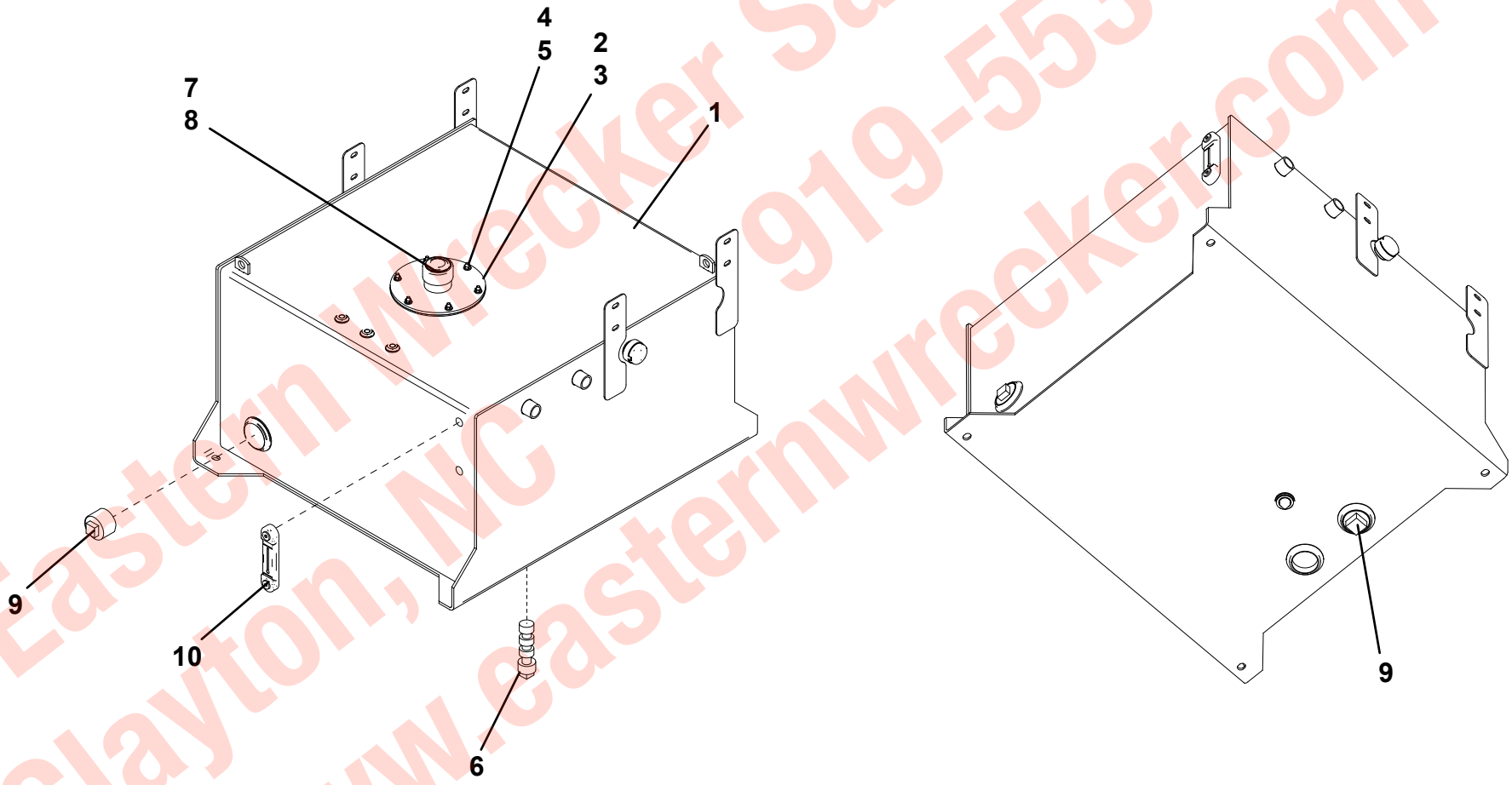


Eastern Wrecker Sales, Inc.
Clayton, NC 919-553-4038
www.easternwrecker.com

## OIL TANK COOLER - 1001151763

| ITEM | PART NO. | DESCRIPTION | QTY |
|---|---|---|---|
| 1 | 70050273 | Core, Cooler - NPT | 1 |
| | 70050275 | Core, Cooler - O-Ring | |
| 2 | 70050276 | Fan | 1 |
| 3 | 70050277 | Valve, Bypass Check | 1 |
| 4 | 70050274 | Switch, Temperature - NPT | 1 |
| | 70050278 | Switch, Temperature - O-Ring | |
| 5 | 70050280 | Plug | 2 |
| 6 | 7115160850 | Capscrew, 0.38”-16NC x 1.00” | 4 |
| 7 | 7950160000 | Lockwasher, 0.38” ID | 4 |
| 8 | 7950160161 | Flatwasher, 0.38” ID | 4 |
| 9 | 7660160000 | Nut, 0.38”-16NC | 4 |
| 10 | 70050279 | Bracket | 2 |
| 11 | 70050281 | Lockwasher, #10 ID | 4 |
| 12 | 70050282 | Locknut, #10 | 4 |

Eastern Wrecker Sales, Inc.
Clayton, NC
919-553-4038
www.easternwrecker.com

## OIL TANK COOLER - 1001151763

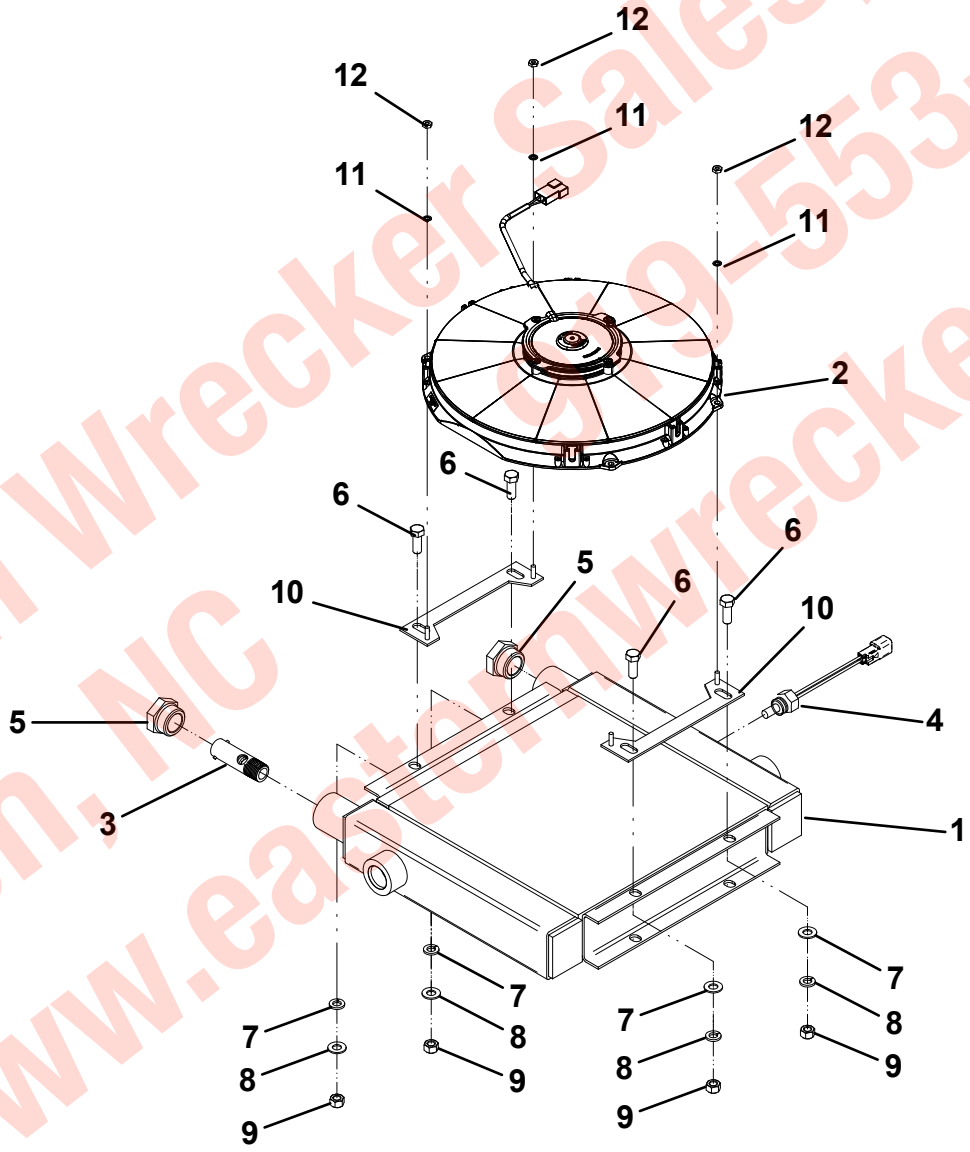


Eastern Wrecker Sales, Inc.
Clayton, NC 919-553-4038
www.easternwrecker.com

## OUTRIGGER/STABILIZER INSTALLATION

| ITEM | PART NO. | DESCRIPTION | QTY |
|---|---|---|---|
| 1 | 1001129405 | Stabilizer Assembly | 4 |
| 2 | 1001127311 | Outrigger/Stabilizer Lift Cylinder Assembly | 4 |
| 3 | 3691000227 | Pin | 4 |
| 4 | 0682212 | Capscrew, 0.75”-10NC x 1.50” | 8 |
| 5 | 7950220141 | Flatwasher, 0.75” ID | 16 |
| 6 | 7950220000 | Lockwasher, 0.75” ID | 8 |
| 7 | 1001129416 | Pin | 4 |
| 8 | 7118221850 | Capscrew, 0.75”-10NC x 2.25” | 4 |
| 9 | 3691000228 | Pin | 4 |
| 10 | 7660222601 | Locknut, 0.75”-10NC | 4 |
| 11 | 7253000002 | Cap, Grease Fitting | 8 |
| 12 | 7440000000 | Grease Fitting | 8 |

Eastern Wrecker Sales, Inc.
919-553-4038
Clayton, NC
www.easternwrecker.com

## OUTRIGGER/STABILIZER INSTALLATION

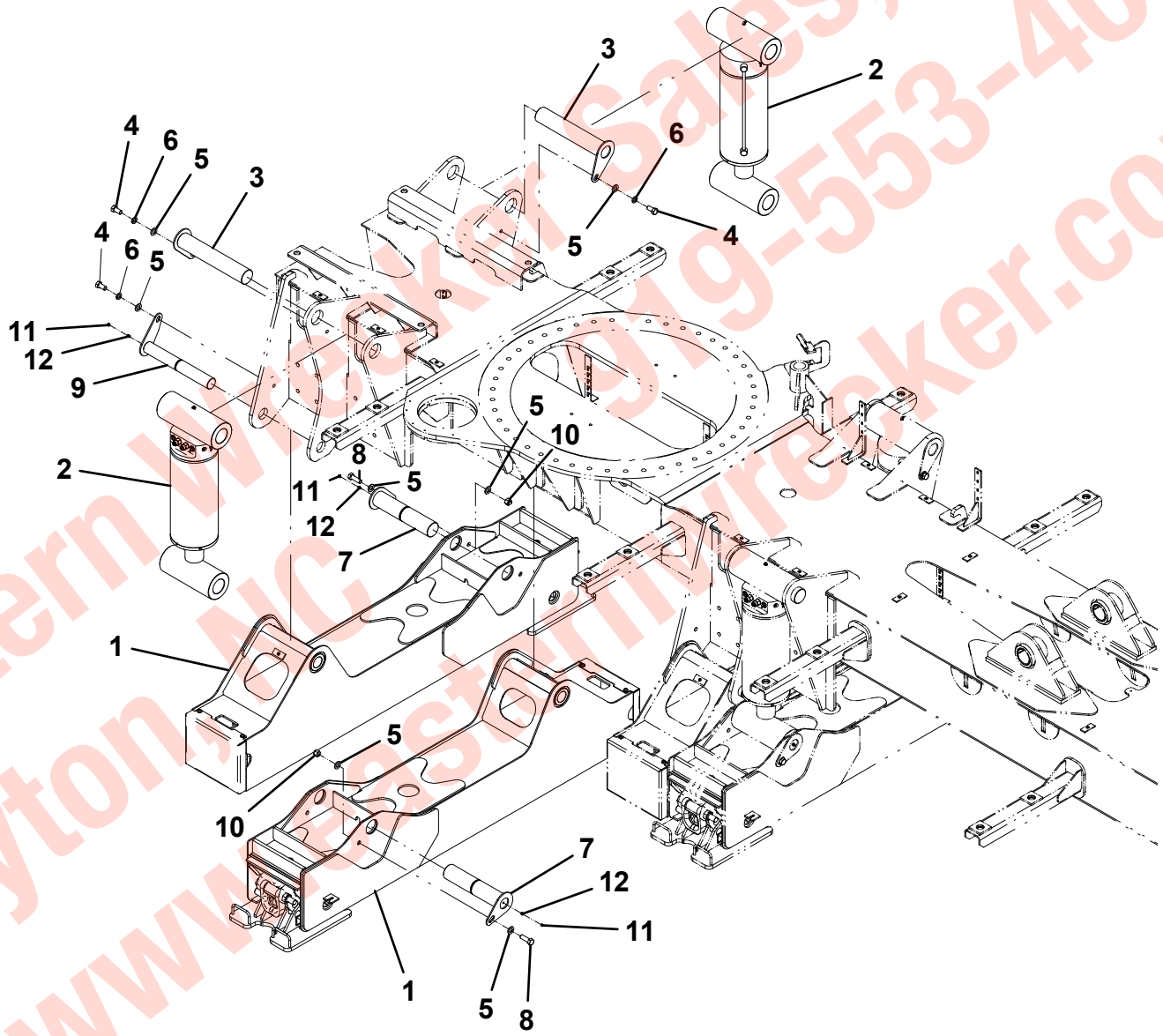


Eastern Wrecker Sales, Inc.
Clayton, NC 919-553-4038
www.easternwrecker.com

## OUTRIGGER/STABILIZER LIFT CYLINDER - 1001127311

| ITEM | PART NO. | DESCRIPTION | QTY |
|---|---|---|---|
| 1 | 70050424 | Barrel Assembly | 1 |
| 2 | 70050425 | Rod Assembly | 1 |
| 3 | 70050430^ | Piston | 1 |
| 4 | 70050435* | Rod Bearing | 1 |
| 5 | 90022234 | Locknut, 2.25”-12UNF | 1 |
| 6 | 7029760 | Locking Screw | 1 |
| 7 | 70022603 | Grease Fitting | 1 |
| 8 | 70050428 | Counter Balance Valve | 2 |
| 9 | 70022067 | Steel SAE O-Ring Plug #4 | 4 |
| 10 | 70050432^# | Rectangular Piston Seal | 1 |
| 11 | 70050434^# | Wear Ring, Piston | 2 |
| 12 | 70050433^# | O-Ring | 1 |
| 13 | 70050438*# | O-Ring | 1 |
| 14 | 70050439*# | Backup Ring | 1 |
| 15 | 70050440*# | Wear Ring | 1 |
| 16 | 70050436*# | Rod Seal | 1 |
| 17 | 90022282*# | Wiper | 1 |

^ Items Sold in Piston Assembly - 70050426
* Items Sold in Rod Bearing Assembly -70050427
# Items Sold in Seal Kit - 70050431

Eastern Wrecker Sales, Inc.
Clayton, NC
919-553-4038
www.easternwrecker.com

## OUTRIGGER/STABILIZER LIFT CYLINDER - 1001127311

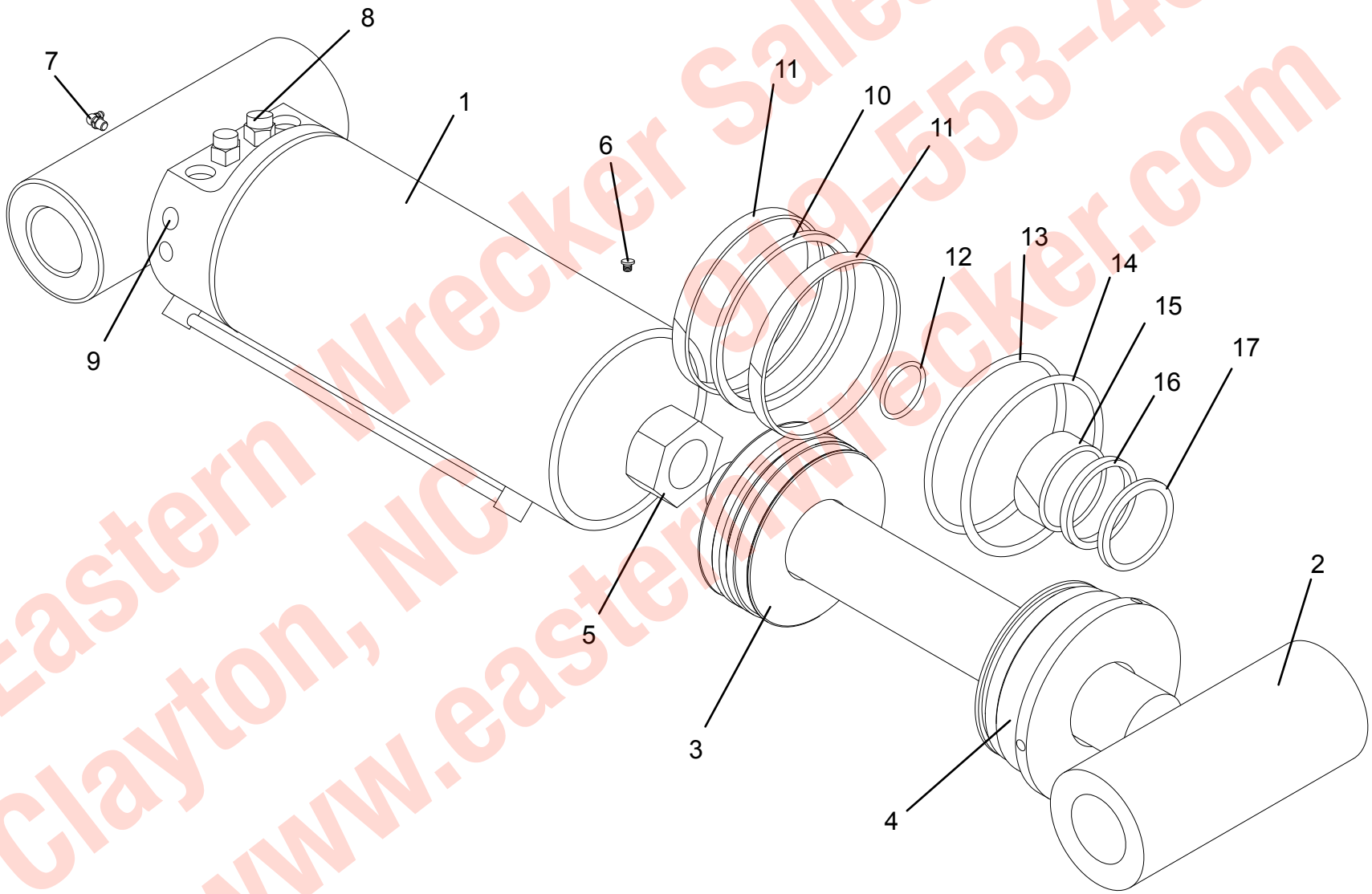


Eastern Wrecker Sales, Inc.
Clayton, NC 919-553-4038
www.easternwrecker.com

## OUTRIGGER/STABILIZER ASSEMBLY

| ITEM | PART NO. | DESCRIPTION | QTY |
|---|---|---|---|
| 1 | 1001127918 | Outer Stabilizer Weldment | 1 |
| 2 | 1001135652 | Inner Stabilizer Weldment | 1 |
| 3 | 3706000348 | Stabilizer Plate Weldment | 1 |
| 4 | 1001129498 | Cover Panel | 1 |
| 5 | 7114160818 | Capscrew, 0.38”-16NC x 1.00” | 4 |
| 6 | 7950160141 | Flatwasher, 0.38” ID | 4 |
| 7 | 7950160000 | Lockwasher, 0.38” ID | 4 |
| 8 | 3691000247 | Pin | 1 |
| 9 | 1001129406 | Pin | 1 |
| 10 | 7754000058 | Retaining Ring | 4 |
| 11 | 3691000253 | Pin | 1 |
| 12 | 7114140618 | Capscrew, 0.25”-20NC x 0.75” | 4 |
| 13 | 4754000006 | D-Ring | 1 |
| 14 | 7440030400 | Grease Fitting | 1 |
| 15 | 7660262600 | Locknut, 1.00”-8NC | 1 |
| 16 | 1001154786 | Capscrew, 1.00”-8NC x 9.00” | 1 |
| 17 | 7253000002 | Cap, Grease Fitting | 1 |
| 18 | 1001127312 | Outrigger/Stabilizer Extension Cylinder | 1 |
| 19 | 4679000243 | Pad | 1 |
| 20 | 4691000489 | Pin | 1 |
| 21 | 1001003803 | Pin | 1 |
| 22 | 3691000223 | Pin | 1 |
| 23 | 7691000048 | Pin | 1 |
| 24 | 1001135667 | Pad, Wear | 2 |

Eastern Wrecker Sales, Inc.
919-553-4038
Clayton, NC
www.easternwrecker.com

## OUTRIGGER/STABILIZER ASSEMBLY

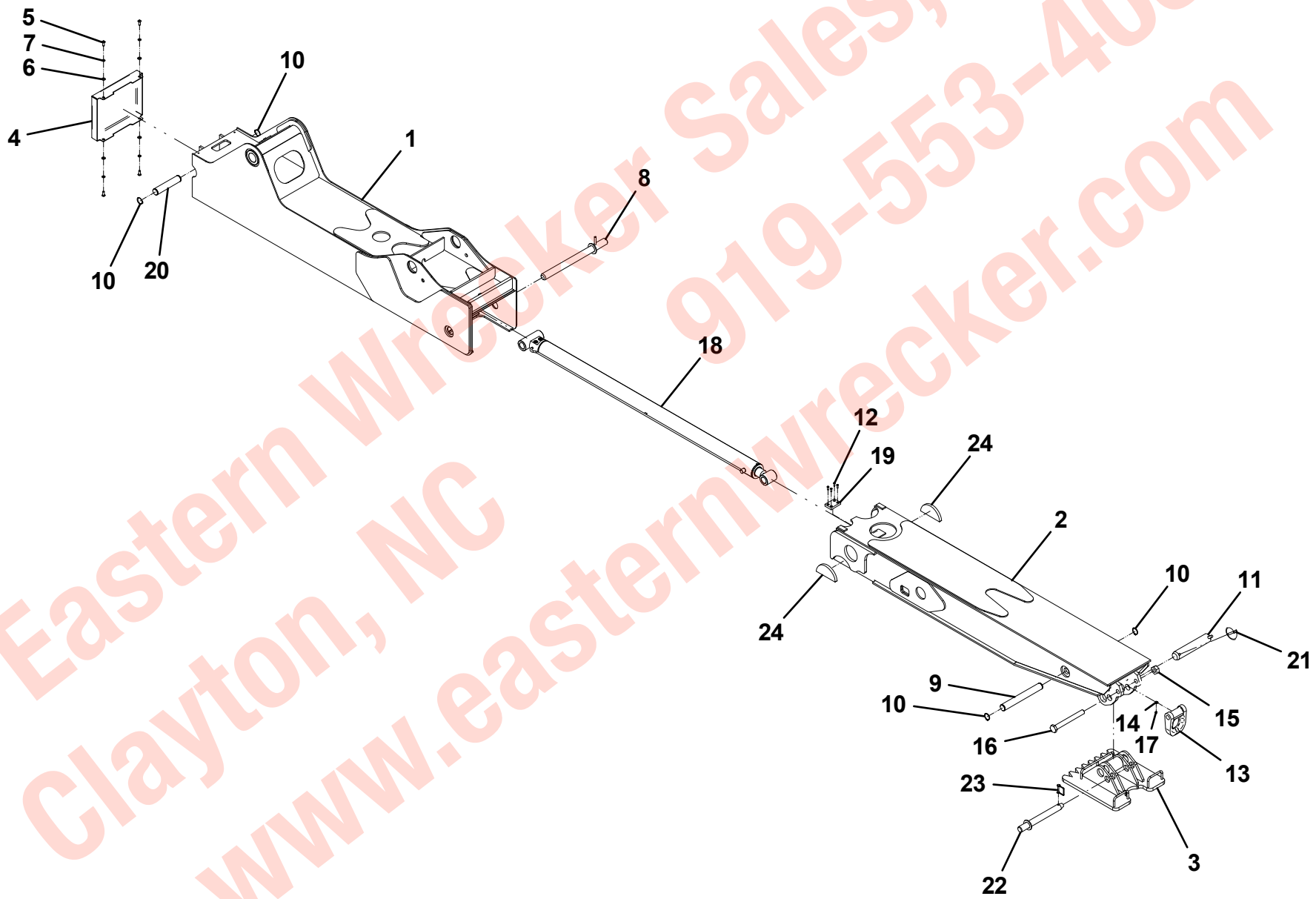


Eastern Wrecker Sales, Inc.
Clayton, NC
919-553-4038
www.easternwrecker.com

## OUTRIGGER/STABILIZER EXTENSION CYLINDER - 1001127312

| ITEM | PART NO. | DESCRIPTION | QTY |
|---|---|---|---|
| 1 | 70050414 | Barrel Weldment | 1 |
| 2 | 70050437 | Rod Weldment | 1 |
| 3 | 70050445* | Piston | 1 |
| 4 | 70050450^ | Rod Bearing | 1 |
| 5 | 91024100 | Locknut, 1.00”-14NF | 1 |
| 6 | 7029760 | Screw, Locking | 1 |
| 7 | 70050444 | Stroke Limiter | 1 |
| 8 | 91034051#^ | Seal, Wiper | 1 |
| 9 | 70050448#* | Seal, O-Ring | 1 |
| 10 | 70050447#* | Seal, Piston | 1 |
| 11 | 70050449#* | Wear Ring | 2 |
| 12 | 70050439#^ | Seal, O-Ring | 1 |
| 13 | 70050438#^ | Seal, Backup Ring | 1 |
| 14 | 70050452#^ | Wear Ring | 1 |
| 15 | 70050451#^ | Seal, Rod | 1 |

* Items Sold in Piston Assembly - 70050441
^ Items Sold in Rod Bearing Assembly - 70050442
# Items Sold in Seal Kit - 70050446

Eastern Wrecker Sales, Inc.
Clayton, NC
919-553-4038
www.easternwrecker.com

## OUTRIGGER/STABILIZER EXTENSION CYLINDER - 1001127312

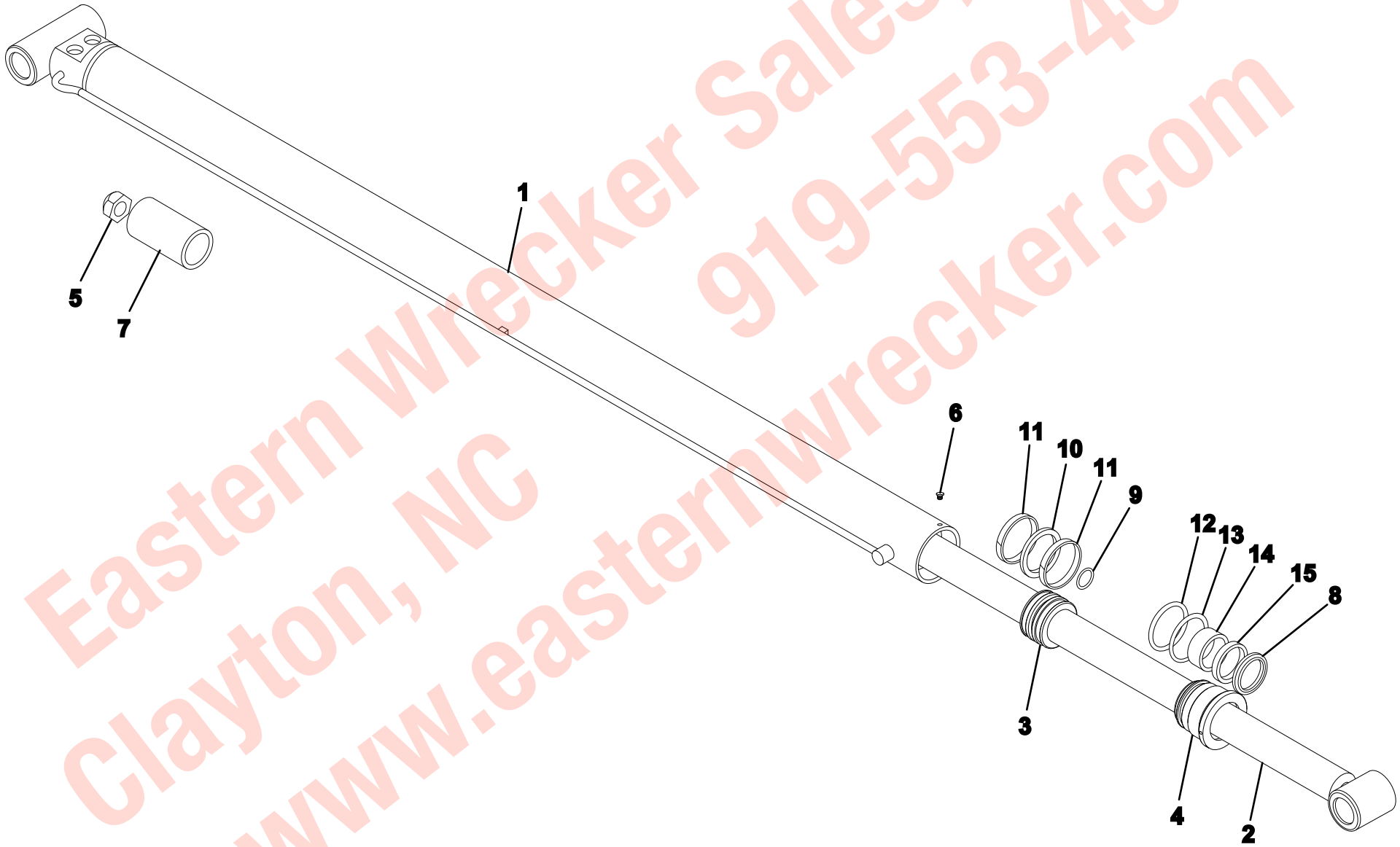


Eastern Wrecker Sales, Inc.
919-553-4038
Clayton, NC
www.easternwrecker.com

## REAR SPADE INSTALLATION

| ITEM | PART NO. | DESCRIPTION | QTY |
|---|---|---|---|
| 1 | 3263000118 | Channel Weldment | 2 |
| 2 | 3706000261 | Spade Claw Plate | 2 |
| 3 | 7320000006 | Spade Cylinder Assembly | 2 |
| 4 | 3691000267 | Pin | 2 |
| 5 | 7950160161 | Flatwasher, 0.38” ID | 2 |
| 6 | 7115161650 | Capscrew, 0.38”-16NC x 2.00” | 2 |
| 7 | 7660162601 | Locknut, 0.38”-16NC | 2 |
| 8 | 7491000207 | Pin” | 2 |
| 9 | 7754000033 | Retaining Ring | 4 |
| 10 | 4691000200 | Pin | 2 |
| 11 | 7754000008 | Retaining Ring | 4 |
| 12 | 4706003716 | Plate | 2 |
| 13 | 7114140518 | Capscrew, 0.25”-20NC x 0.63” | 8 |
| 14 | 7949000025 | Lockwasher 11MM ID | 8 |
| 15 | 7950140153 | Flatwasher, 0.25” ID | 8 |
| 16 | 3691000126 | Pin | 2 |
| 17 | 7691000019 | Lynch Pin | 2 |

Eastern Wrecker Sales, Inc.
Clayton, NC
919-553-4038
www.easternwrecker.com

## REAR SPADE INSTALLATION

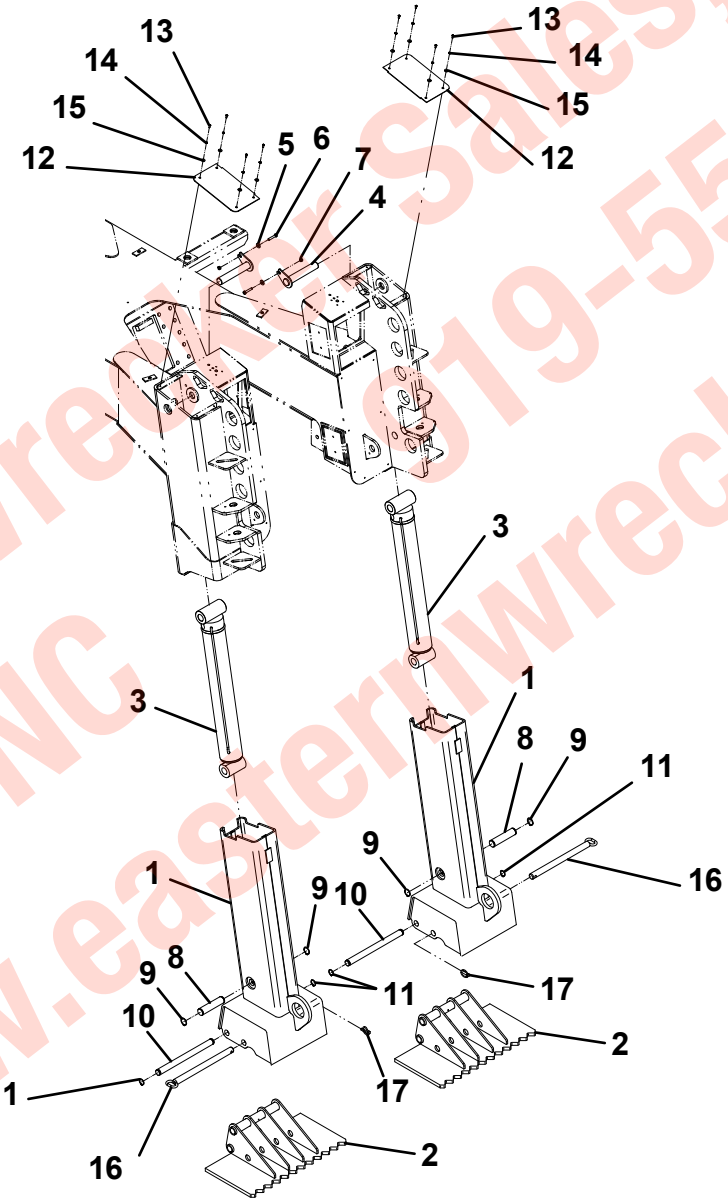


Eastern Wrecker Sales, Inc.
Clayton, NC 919-553-4038
www.easternwrecker.com

## SPADE CYLINDER ASSEMBLY - 7320000006

| ITEM | PART NO. | DESCRIPTION | QTY |
|---|---|---|---|
| 1 | 9796250080 | Seal, Wiper | 1 |
| 2 | 7019828 | Seal | 1 |
| 3 | 9754250009 | Ring, Back-up | 1 |
| 4 | 9796250057 | Seal, “O” Ring | 1 |
| 5 | 9796250073 | Seal | 1 |
| 6 | 9796250061 | Seal, “O” Ring | 1 |
| 7 | 9796250066 | Seal, “O” Ring | 1 |
| 8 | 9724250014 | Ring, Wear | 1 |
| 9 | 9754250015 | Ring, Wear | 2 |
| 10 | 7577000167 | Kit, Seal | 1 |
| 11 | 7003212 | Locknut | 1 |
| 12 | 7005322 | Grease Fitting | 2 |
| 13 | 7005365 | Plug, Port | 2 |
| 14 | 70021648 | Plug, Port | 2 |
| 15 | 70050215 | Valve, Counterbalance | 2 |
| 16 | 9912250004 | Assembly, Tube | 1 |
| 17 | 9763250009 | Assembly, Rod | 1 |
| 18 | 9553250009 | Head | 1 |
| 19 | 70050531 | Piston | 1 |

Eastern Wrecker Sales, Inc.
Clayton, NC
919-553-4038
www.easternwrecker.com

## SPADE CYLINDER ASSEMBLY - 7320000006

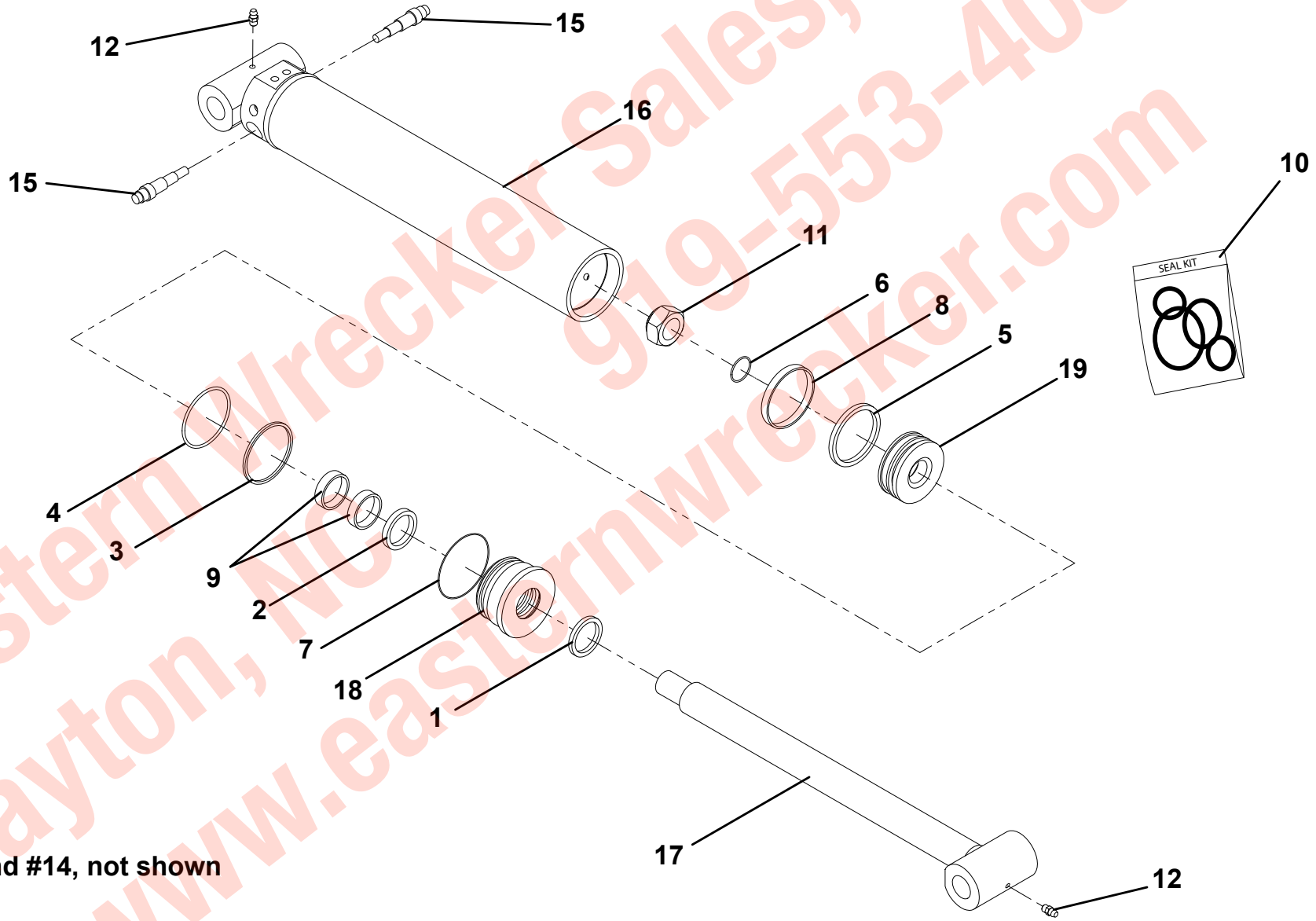


Items #13 and #14, not shown

Eastern Wrecker Sales, Inc.
Clayton, NC 919-553-4038
www.easternwrecker.com

## TAIL BOARD D-RING INSTALLATION

| ITEM | PART NO. | DESCRIPTION | QTY |
|---|---|---|---|
| 1 | 4754000004 | D-Ring | 4 |
| 2 | 3691000174 | Pin | 4 |
| 3 | 7691000047 | Lynch Pin | 2 |
| 4 | 4949000055 | Washer, Nylatron | 2 |
| 5 | 7115160650 | Capscrew, 0.38”-16NC x 2.00” | 4 |
| 6 | 7950160000 | Lockwasher, 0.38” ID | 4 |
| 7 | 7440030000 | Grease Fitting | 4 |
| 8 | 7253000002 | Cap, Grease Fitting | 4 |

Eastern Wrecker Sales, Inc.
919-553-4038
Clayton, NC
www.easternwrecker.com

## TAIL BOARD D-RING INSTALLATION

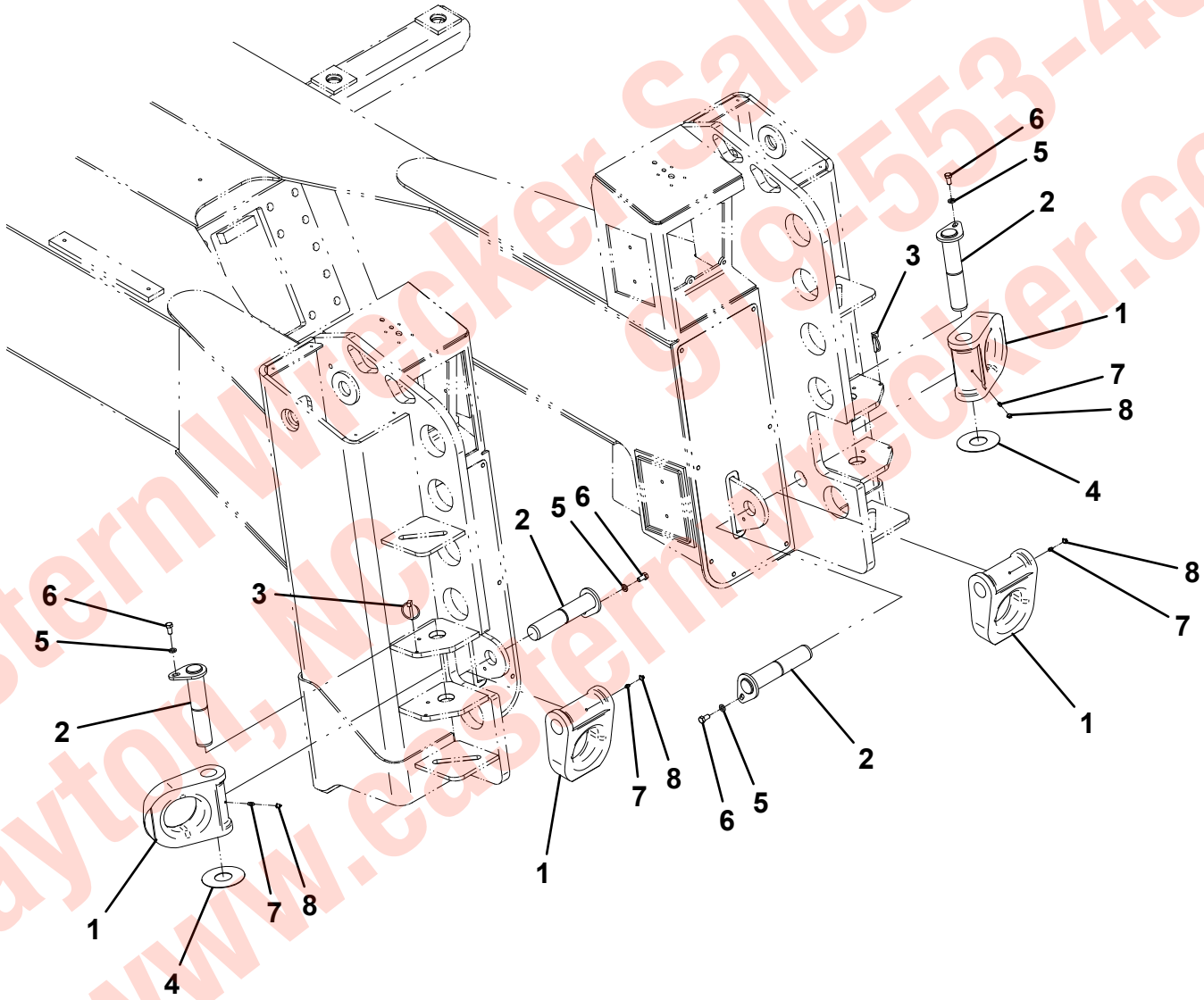


Eastern Wrecker Sales, Inc.
Clayton, NC 919-553-4038
www.easternwrecker.com

## SLEW BEARING INSTALLATION

| ITEM | PART NO. | DESCRIPTION | QTY |
|---|---|---|---|
| 1 | 1001127316 | Bearing | 1 |
| 2 | 0682652 | Capscrew, 1.00”-8NC x 6.50” | 44 |
| 3 | 10701259 | Flatwasher, 1.00” ID | 44 |
| 4 | 1001136692 | Hose, Grease | 1 |
| 5 | 1001118961 | Hose, Grease | 1 |
| 6 | 1001131060 | Decal, Bearing Grease | 2 |

Eastern Wrecker Sales, Inc.
919-553-4038
Clayton, NC
www.easternwrecker.com

## SLEW BEARING INSTALLATION

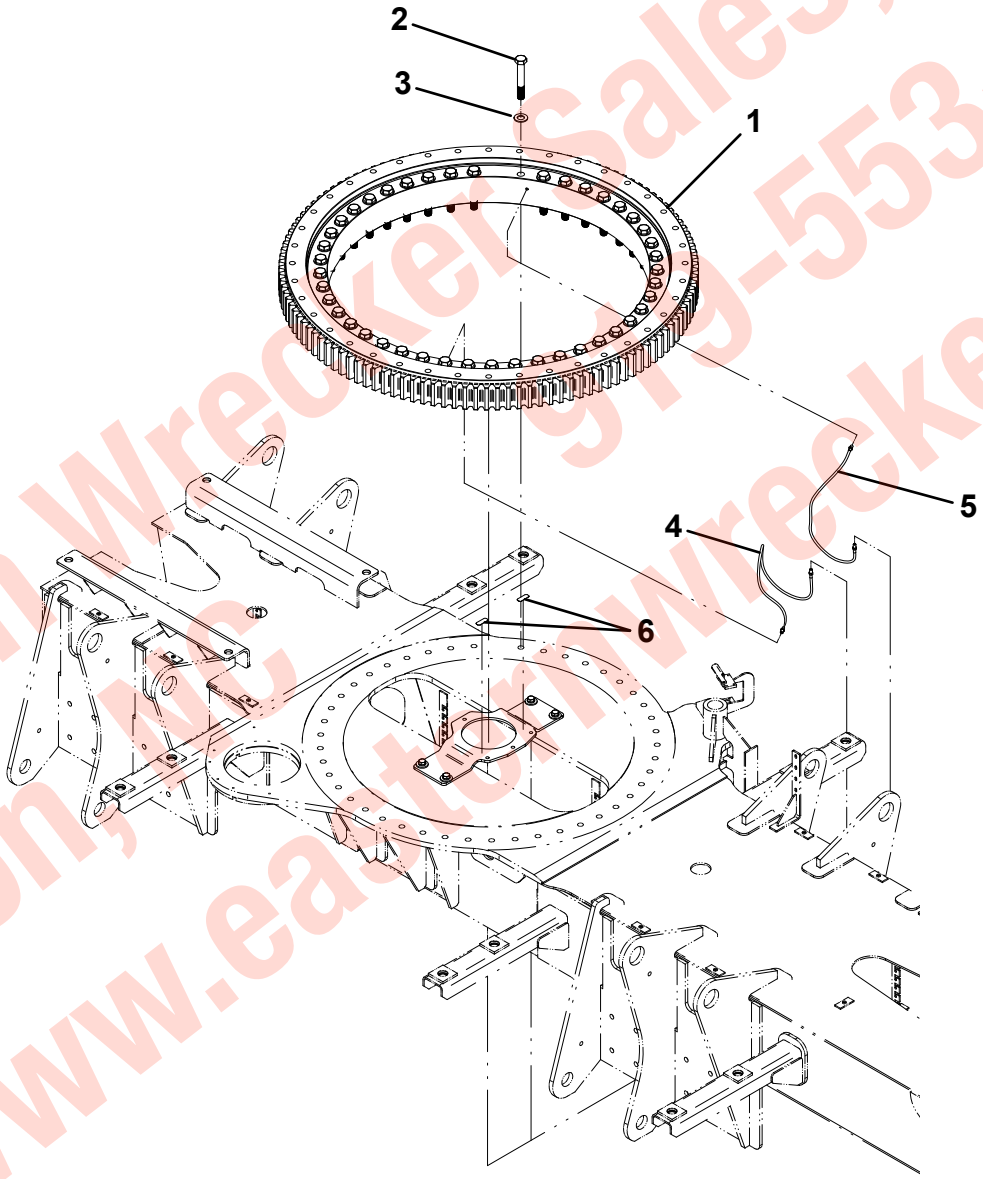


Eastern Wrecker Sales, Inc.
Clayton, NC 919-553-4038
www.easternwrecker.com

## SLEW DRIVE INSTALLATION

| ITEM | PART NO. | DESCRIPTION | QTY |
|---|---|---|---|
| 1 | 1001127324 | Motor, Planetary Gear Assembly | 1 |
| 2 | 7118221650 | Capscrew, 0.75”-10NC x 2.00” | 10 |
| 3 | 7950220142 | Flatwasher, 0.75” ID | 10 |
| 4 | 1001130840 | Cover | 1 |
| 5 | 7115150850 | Capscrew, 0.31”-18NC x 1.00” | 6 |
| 6 | 7950150000 | Lockwasher, 0.31” ID | 6 |

Eastern Wrecker Sales, Inc.
919-553-4038
Clayton, NC
www.easternwrecker.com

## SLEW DRIVE INSTALLATION

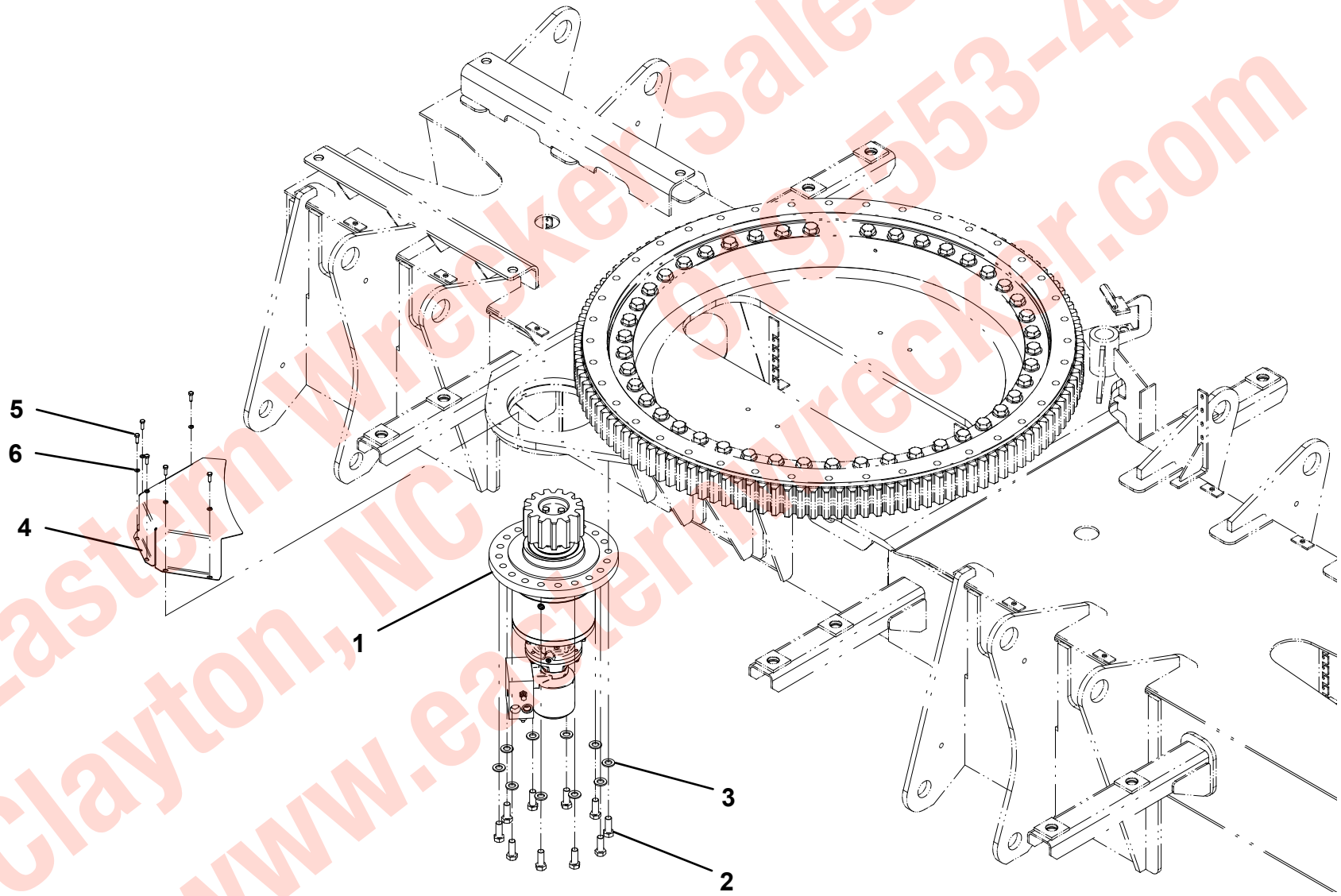


Eastern Wrecker Sales, Inc.
Clayton, NC 919-553-4038
www.easternwrecker.com

## SWIVEL INSTALLATION

| ITEM | PART NO. | DESCRIPTION | QTY |
|---|---|---|---|
| 1 | 1001129628 | Swivel Assembly, Hydraulic/Electric | 1 |
| 2 | 1001129987 | Bracket | 1 |
| 3 | 7950200161 | Flatwasher, 0.63” ID | 8 |
| 4 | 7950200000 | Lockwasher, 0.63” ID | 6 |
| 5 | 7115201650 | Capscrew, 0.63”-11NC x 2.00” | 6 |
| 6 | 7115203250 | Capscrew, 0.63”-11NC x 4.00” | 6 |
| 7 | 7660202601 | Locknut, 0.63”-11NC | 1 |

Eastern Wrecker Sales, Inc.
919-553-4038
Clayton, NC
www.easternwrecker.com

## SWIVEL INSTALLATION

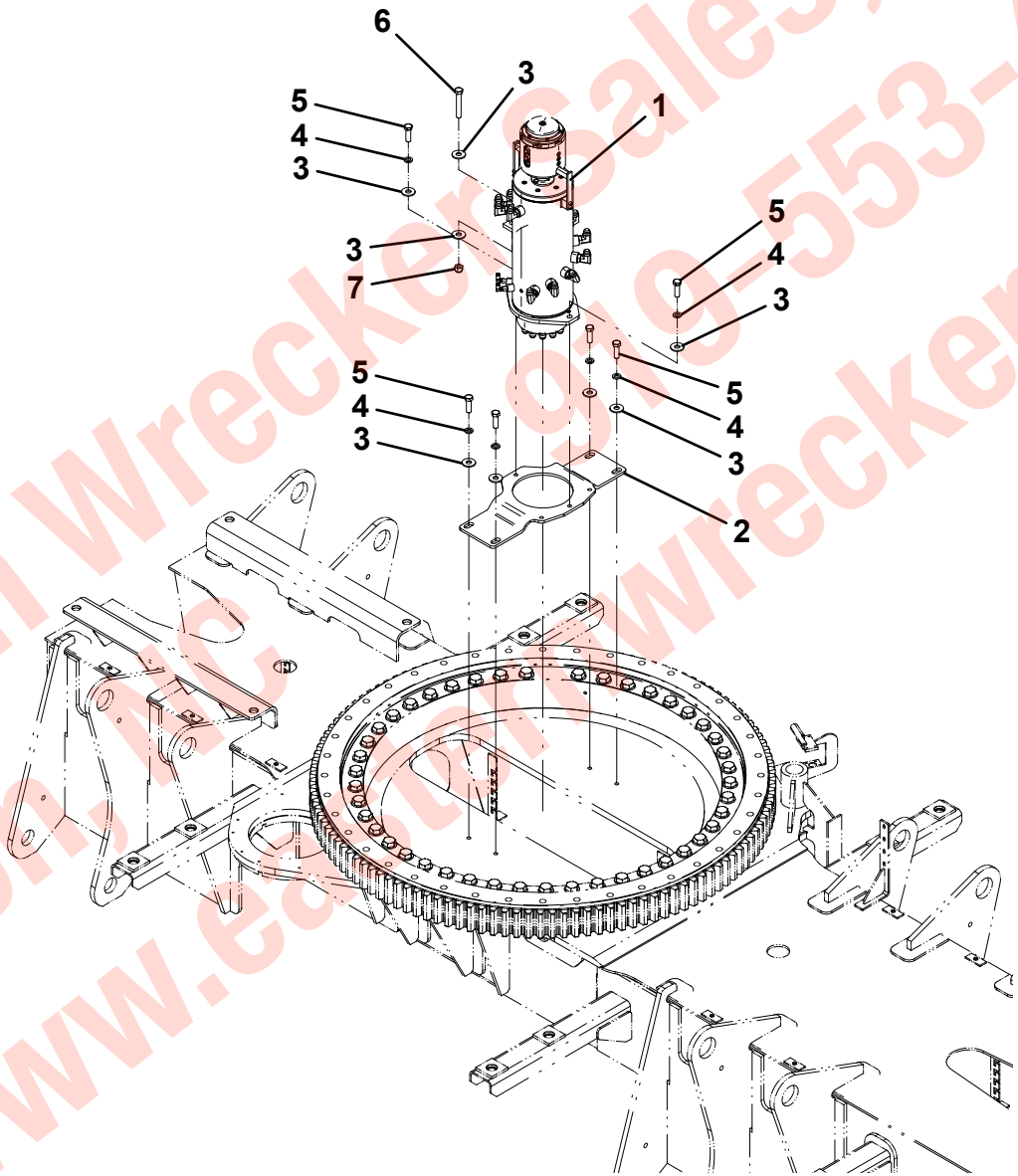


Eastern Wrecker Sales, Inc.
Clayton, NC 919-553-4038
www.easternwrecker.com

## SWIVEL ASSEMBLY, HYDRAULIC/ELECTRIC - 1001129628

| ITEM | PART NO. | DESCRIPTION | QTY |
|---|---|---|---|
| 1 | 1001127656 | Hydraulic/Electric Swivel | 1 |
| 2 | 7445101045 | Elbow | 12 |
| 3 | 7443000414 | Adapter | 4 |
| 4 | 7443000173 | Elbow | 4 |
| 5 | 7445101043 | Adapter | 12 |

Eastern Wrecker Sales, Inc.
919-553-4038
Clayton, NC
www.easternwrecker.com

## SWIVEL ASSEMBLY, HYDRAULIC/ELECTRIC - 1001129628

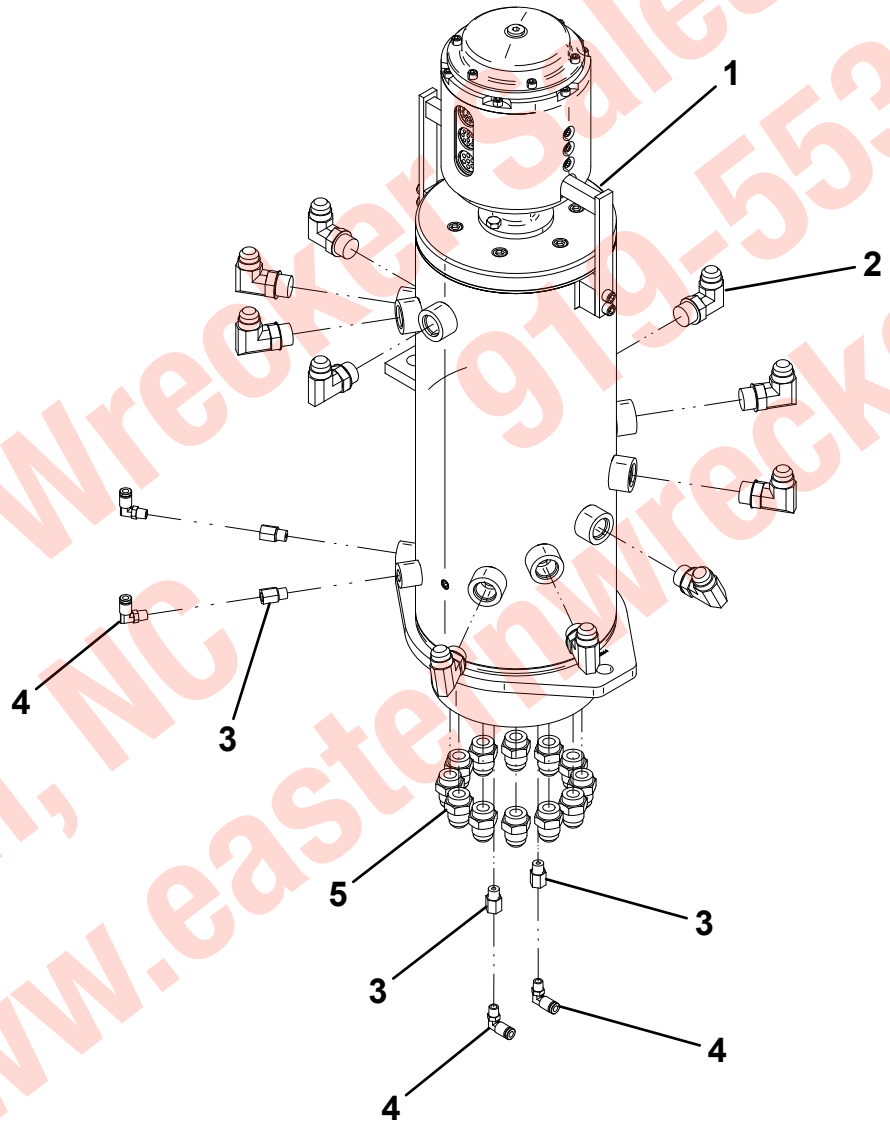


Eastern Wrecker Sales, Inc.
Clayton, NC 919-553-4038
www.easternwrecker.com

## TURNTABLE INSTALLATION

| ITEM | PART NO. | DESCRIPTION | QTY |
|---|---|---|---|
| 1 | 1001128391 | Turntable Weldment | 1 |
| 2 | 0682622 | Capscrew, 1.00”-8NC x 2.75” | 40 |
| 3 | 10701259 | Flatwasher, 1.00” ID | 40 |
| 4 | 1001134239 | Cover | 2 |
| 5 | 7950140161 | Flatwasher, 0.25” ID | 8 |
| 6 | 7950140000 | Lockwasher, 0.25” ID | 8 |
| 7 | 7114140818 | Capscrew, 0.25”-20NC x 1.00” | 8 |

Eastern Wrecker Sales, Inc.
919-553-4038
Clayton, NC
www.easternwrecker.com

## TURNTABLE INSTALLATION

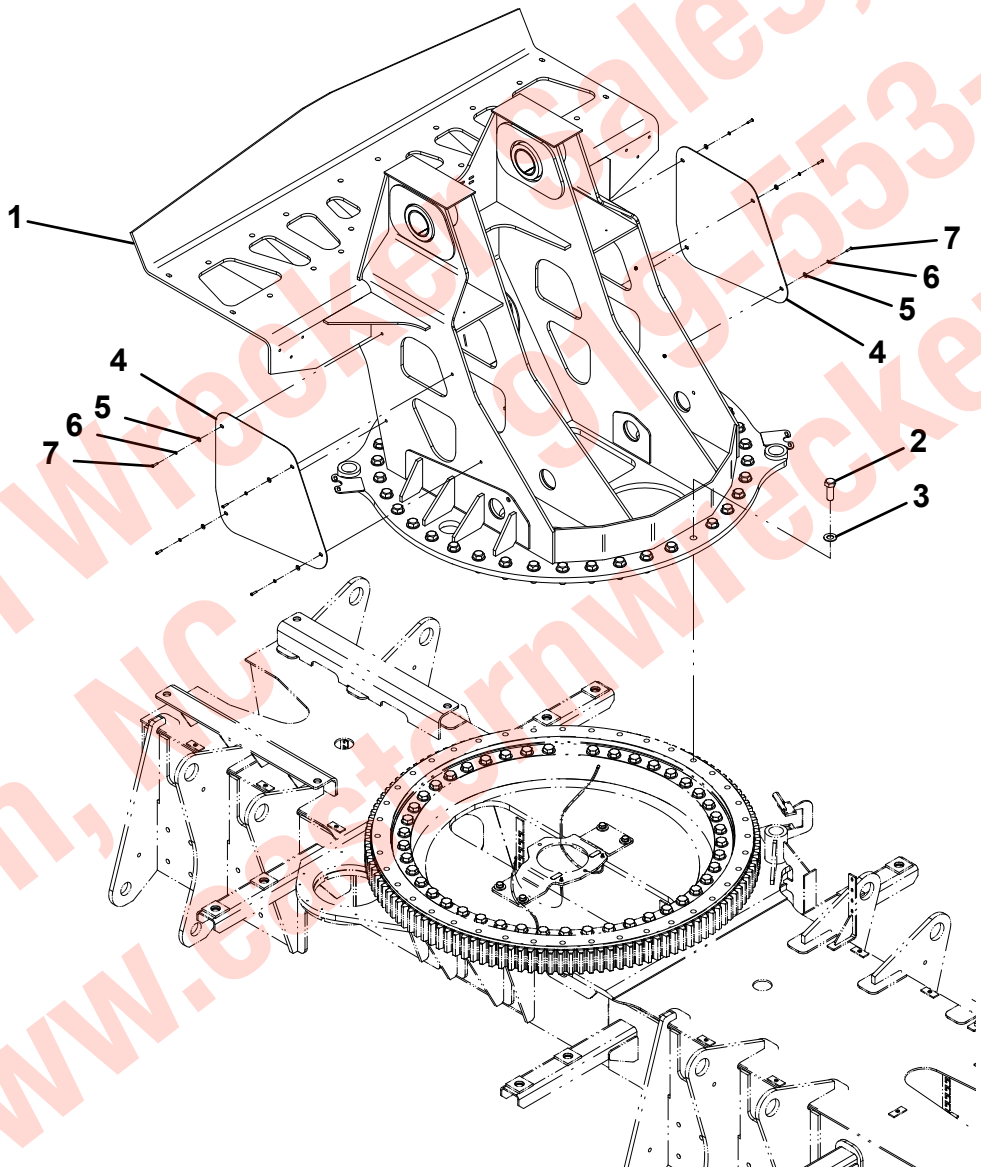


Eastern Wrecker Sales, Inc.
Clayton, NC 919-553-4038
www.easternwrecker.com

## HOUSE LOCK INSTALLATION

| ITEM | PART NO. | DESCRIPTION | QTY |
|---|---|---|---|
| 1 | 7178000038 | Bracket | 1 |
| 2 | 7320000069 | Cylinder | 1 |
| 3 | 7277000012 | Clevis, 0.44”-20NF | 1 |
| 4 | 7660170230 | Nut, 0.44”-20NF | 1 |
| 5 | 7115140850 | Bolt, 0.25”-20NC x 1.00” | 4 |
| 6 | 7660142601 | Locknut, 0.25”-20NC | 4 |
| 7 | 7950140141 | Flatwasher, 0.25” ID | 8 |
| 8 | 4706004174 | Plate | 2 |
| 9 | 4706004173 | Plate | 1 |
| 10 | 7843000038 | Spring | 2 |
| 11 | 4990000001 | Clevis, 0.50”-13NC x 2.25” | 1 |
| 12 | 7660180200 | Nut, 0.50”-13NC | 1 |
| 13 | 4763000295 | Threaded Rod, 0.50”-13NC | 1 |
| 14 | 4706004170 | Plate | 1 |
| 15 | 7935000273 | Air Valve | 1 |
| 16 | 7114100818 | Capscrew, #10-24NC x 1.00” | 4 |
| 17 | 1001142626 | Bracket | 2 |
| 18 | 7660180001 | Nut, 0.50”-13NC | 4 |
| 19 | 7115160850 | Bolt | 8 |
| 20 | 7660162601 | Locknut, 0.38”-16NC | 4 |
| 21 | 7950160141 | Flatwasher, 0.38” ID | 18 |
| 22 | 7870000041 | Switch Grid Lockout | 1 |
| 23 | 7115141450 | Bolt, 0.25”-20NC x 1.75” | 1 |
| 24 | 7660140001 | Nut, 0.25”-20NC | 2 |
| 25 | 7114101618 | Capscrew, #10-24NC x 2.00” | 4 |
| 26 | 7950180141 | Flatwasher, 0.50” ID | 2 |
| 27 | 7691000050 | Pin | 1 |
| 28 | 4912000369 | Tube, 0.75” OD x 0.48” ID x 0.75” | 2 |
| 29 | 4691000450 | Pin | 1 |
| 30 | 1001129470 | Pin | 1 |
| 31 | 7950160000 | Lockwasher, 0.38” ID | 4 |
| 32 | 7660102604 | Locknut, #10-24NC | 8 |
| 33 | 7691000049 | Pin | 1 |
| 34 | 4811000942 | Sheet | 2 |
| 35 | 7690021210 | Pin | 2 |
| 36 | 7346000056 | Fitting Liquid | 1 |

Eastern Wrecker Sales, Inc.
919-553-4038
Clayton, NC
www.easternwrecker.com

## HOUSE LOCK INSTALLATION

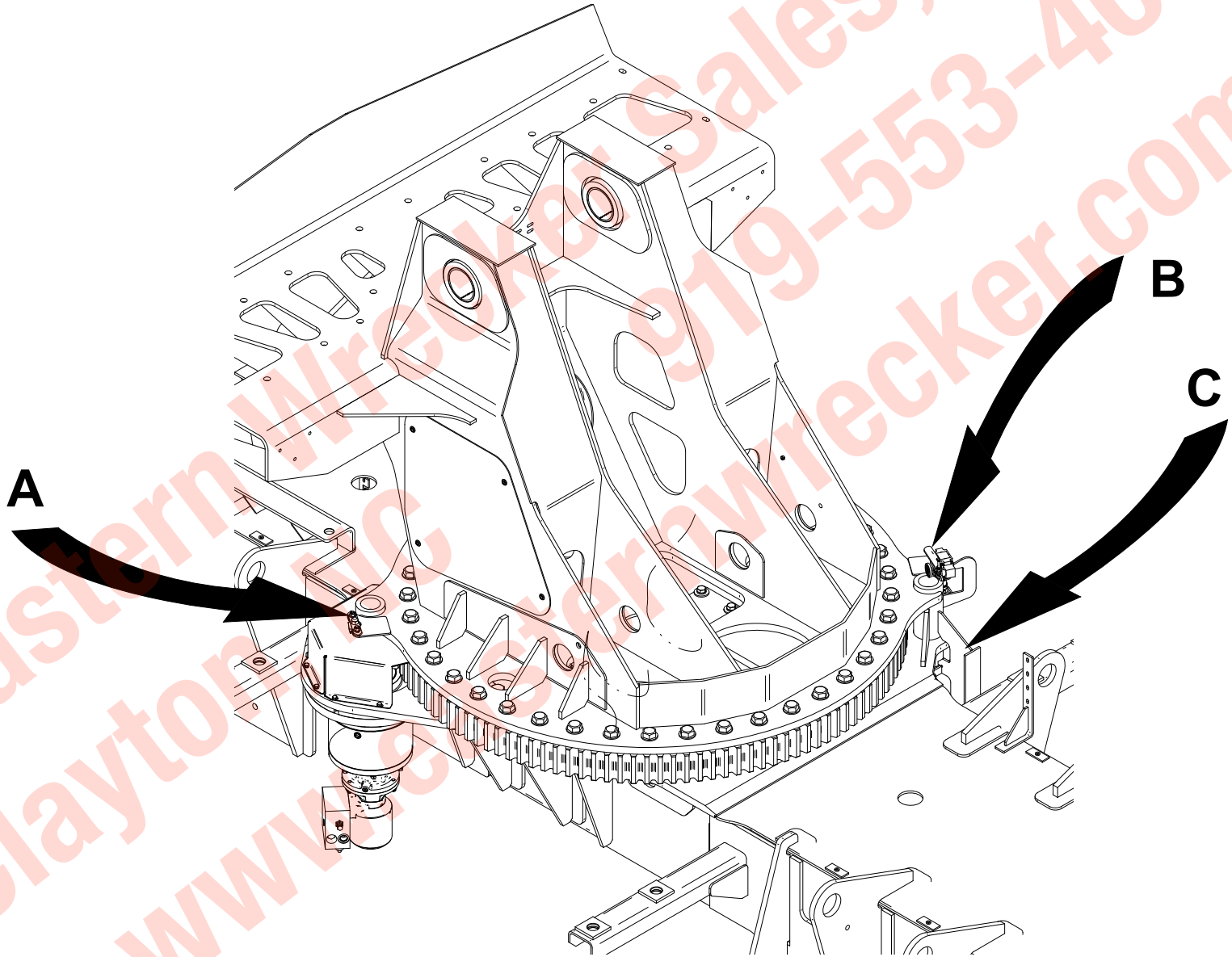


Eastern Wrecker Sales, Inc.
Clayton, NC 919-553-4038
www.easterrewrecker.com

## HOUSE LOCK INSTALLATION

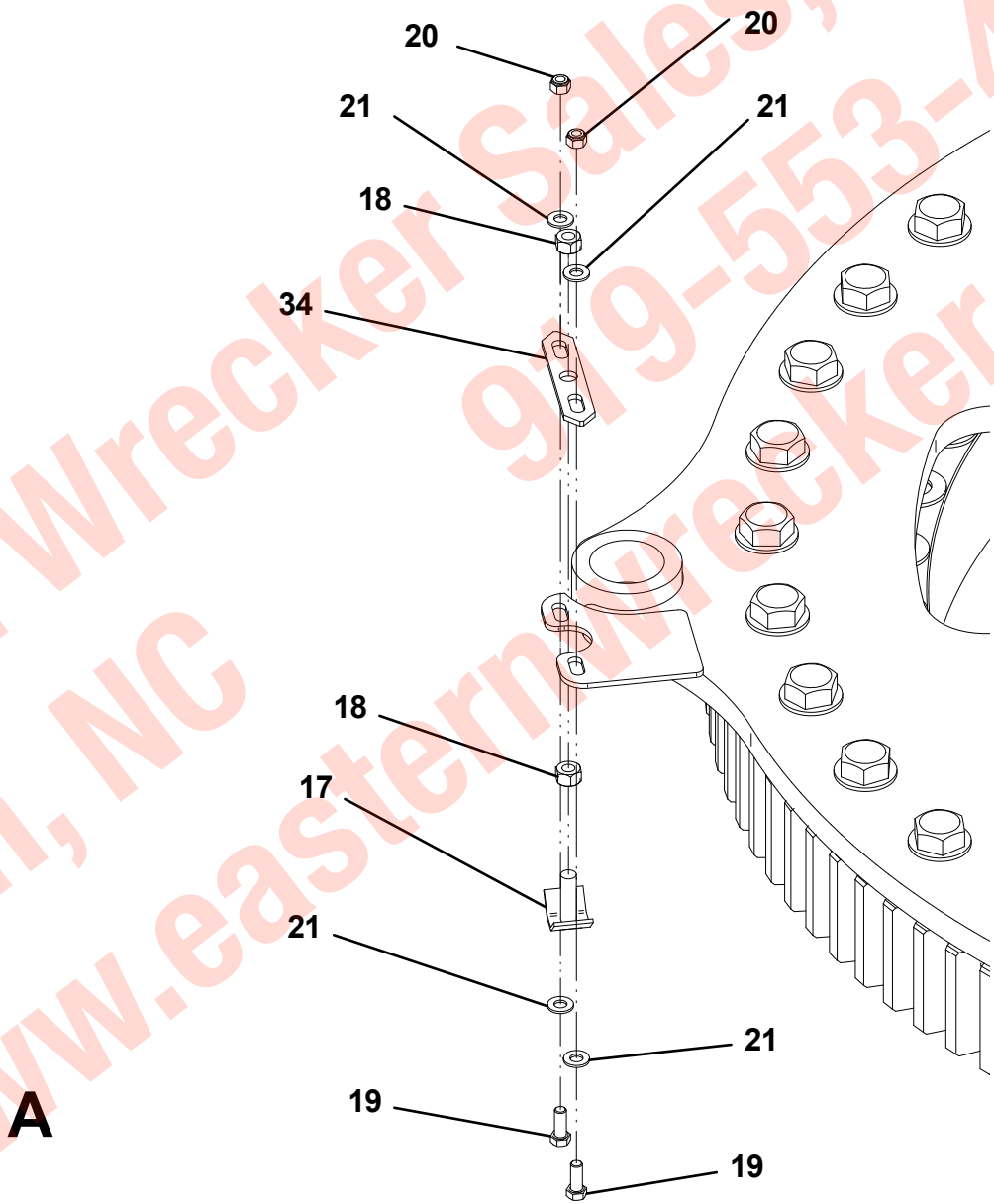


Eastern Wrecker Sales, Inc.
919-553-4038
Clayton, NC
www.easternwrecker.com

## HOUSE LOCK INSTALLATION

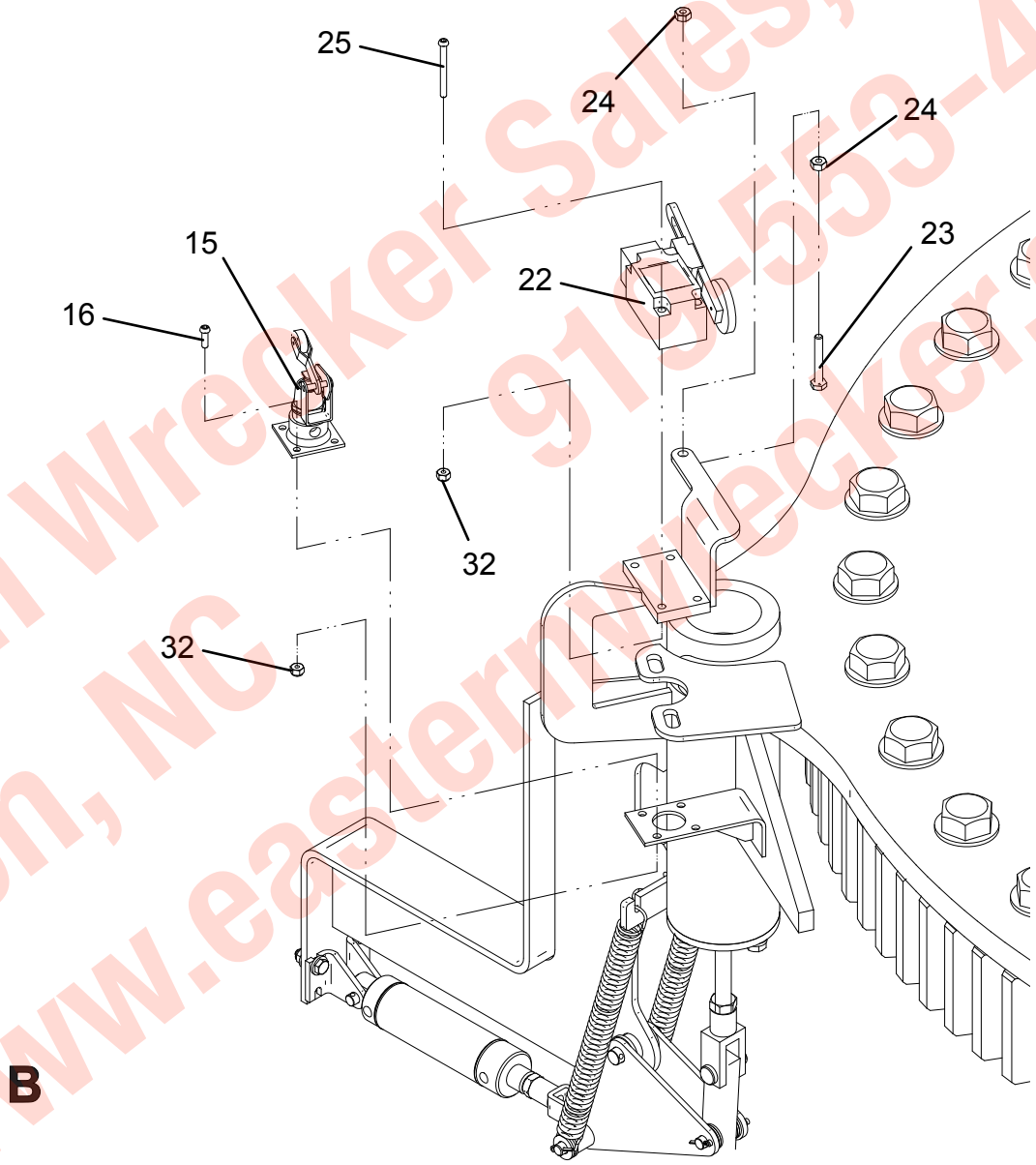


Eastern Wrecker Sales, Inc.
Clayton, NC 919-553-4038
www.easternwrecker.com

## HOUSE LOCK INSTALLATION

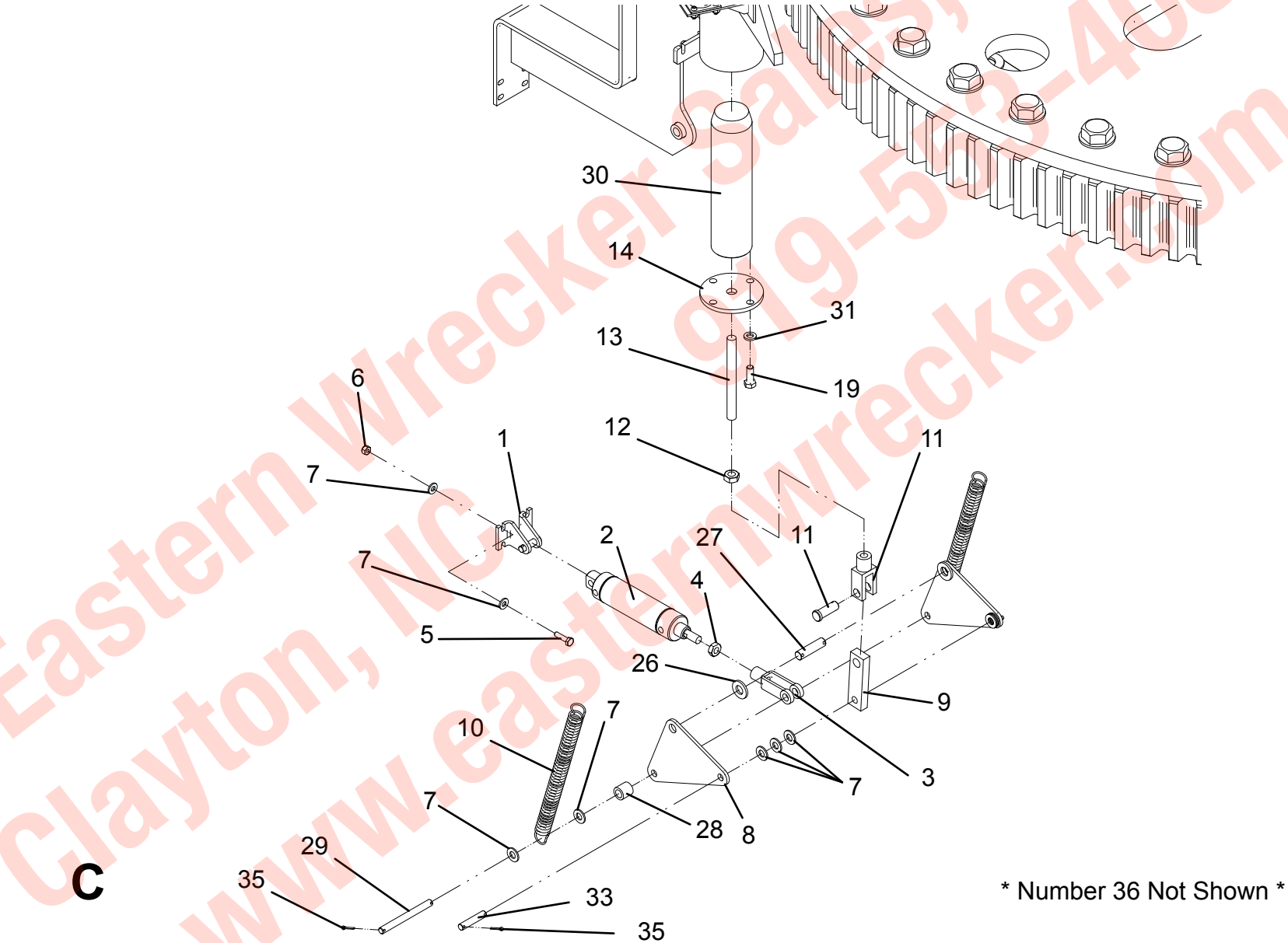


* Number 36 Not Shown *

Eastern Wrecker Sales, Inc.
Clayton, NC 919-553-4038
www.easternwrecker.com

## HOUSE LOCK INSTALLATION

THIS PAGE INTENTIONALLY LEFT BLANK

Eastern Wrecker Sales, Inc.
919-553-4038
Clayton, NC
www.easternwrecker.com

## WRECKER BOOM INSTALLATION - 3 PIECE

| ITEM | PART NO. | DESCRIPTION | QTY |
|---|---|---|---|
| 1 | 1001128463 | Boom Assembly, 3 Piece | 1 |
| 2 | 4691000556 | Pin | 1 |
| 3 | 1001128283 | Pin | 2 |
| 4 | 3691000252 | Pin | 2 |
| 5 | 1001127313 | Lift Cylinder Assembly | 2 |
| 6 | 7950220141 | Flatwasher, 0.75” ID | 2 |
| 7 | 7118225650 | Capscrew, 0.75”-10NC x 7.00” | 1 |
| 8 | 7660222601 | Locknut, 0.75”-10NC | 1 |
| 9 | 7950200141 | Flatwasher, 0.63”-11NC x 1.25” | 4 |
| 10 | 7950200000 | Lockwasher, 0.63” ID | 4 |
| 11 | 7115201050 | Capscrew, 0.63”-11NC x 1.25” | 4 |
| 12 | 4120000021 | Capscrew, 0.75”-10NC x 1.50” | 2 |
| 13 | 7440030000 | Grease Fitting | 2 |
| 14 | 7440000000 | Grease Fitting | 2 |
| 15 | 7253000002 | Cap, Grease Fitting | 4 |

Eastern Wrecker Sales, Inc.
919-553-4038
Clayton, NC
www.easternwrecker.com

## WRECKER BOOM INSTALLATION - 3 PIECE

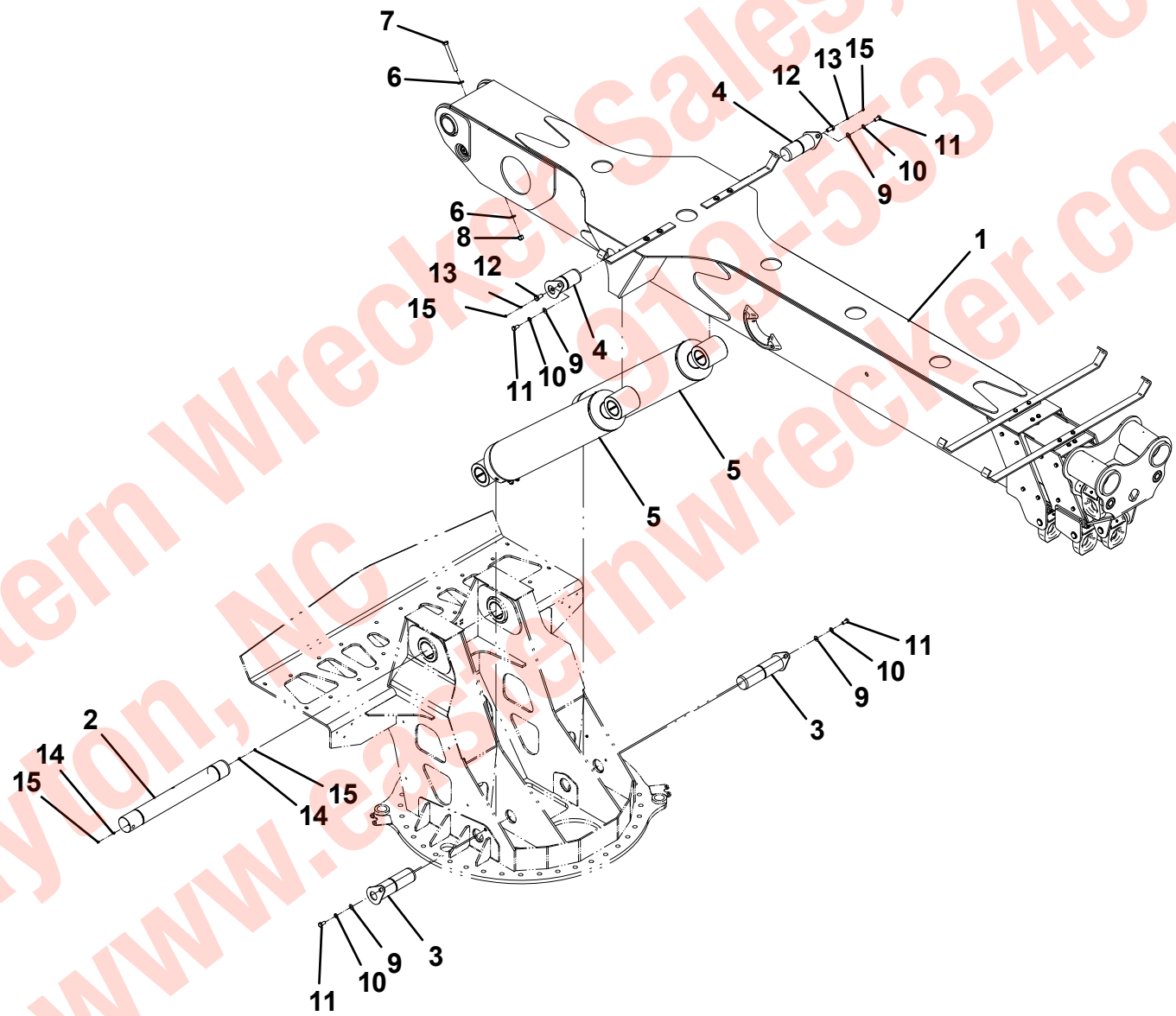


Eastern Wrecker Sales, Inc.
Clayton, NC 919-553-4038
www.easternwrecker.com

## WRECKER BOOM LIFT CYLINDER - 1001127313

| ITEM | PART NO. | DESCRIPTION | QTY |
|---|---|---|---|
| 1 | 70050403 | Barrel Assembly | 1 |
| 2 | 70050404 | Rod Assembly | 1 |
| 3 | 70050411 | Piston | 1 |
| 4 | 70050416 | Rod Bearing | 1 |
| 5 | 70022067 | Steel SAE O-Ring Plug #4 | 4 |
| 6 | 7029760 | Locking Screw | 1 |
| 7 | 70050407 | Counterbalance Valve | 2 |
| 8 | 70050408 | Grease Fitting | 1 |
| 9 | 70050409 | Set Screw | 1 |
| 10 | 70050410 | Connex Bushing | 4 |
| 11 | 70050415 | Wear Ring, Piston | 2 |
| 12 | 70050413 | Rectangular Piston Seal | 1 |
| 13 | 91034041 | O-Ring | 1 |
| 14 | 70050420 | O-Ring | 1 |
| 15 | 70050421 | Backup Ring | 1 |
| 16 | 70050423 | Wear Ring Rod | 1 |
| 17 | 70050422 | Rod Seal | 1 |
| 18 | 70050419 | Seal Wiper | 1 |

Eastern Wrecker Sales, Inc.
919-553-4038
Clayton, NC
www.easternwrecker.com

## WRECKER BOOM LIFT CYLINDER - 1001127313

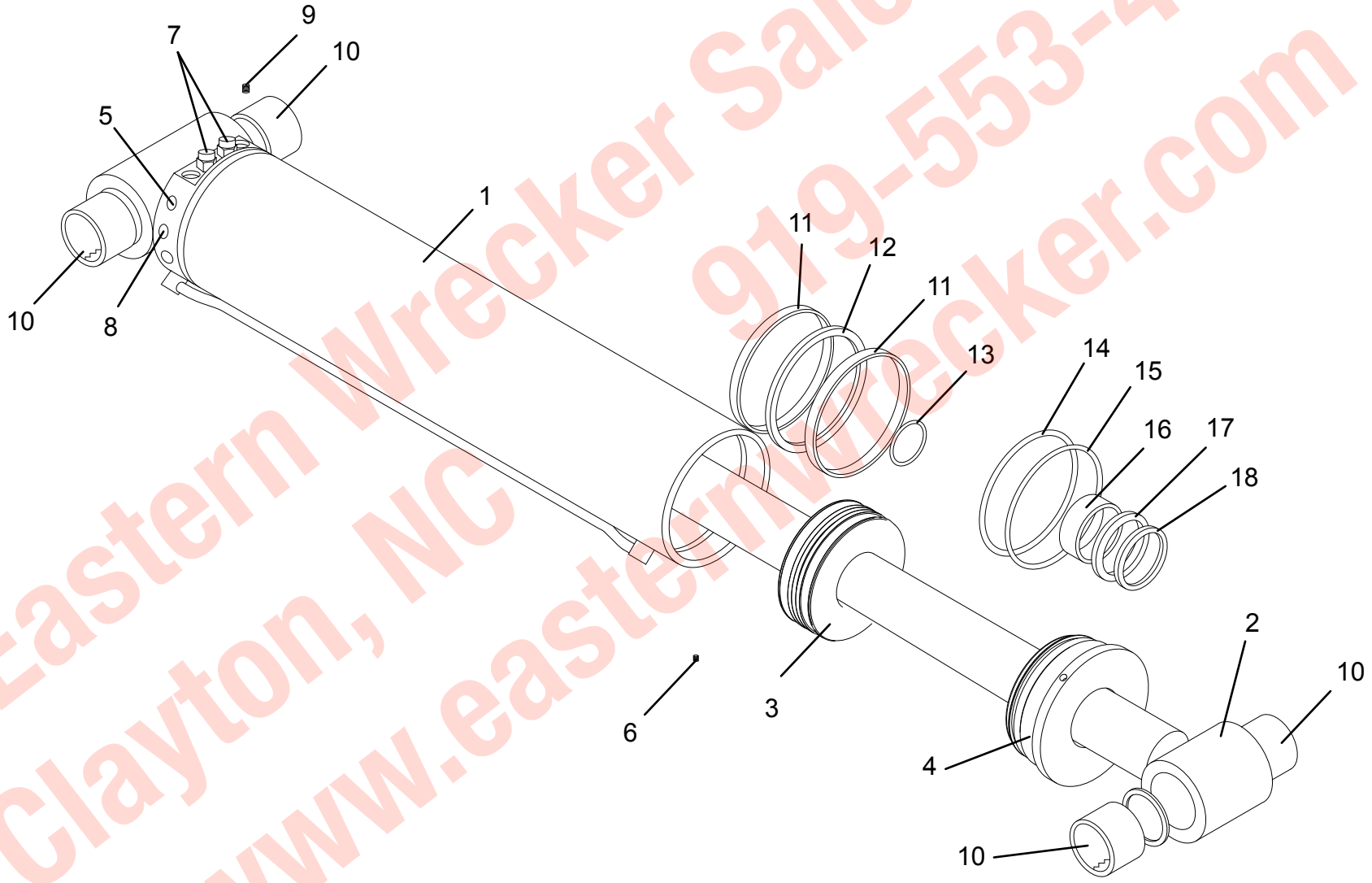


Eastern Wrecker Sales, Inc.
919-553-4038
Clayton, NC
www.easternwrecker.com

## WRECKER BOOM ASSEMBLY - 3 PIECE

| ITEM | PART NO. | DESCRIPTION | QTY |
|---|---|---|---|
| 1 | 1001127853 | Boom Weldment, Base Section | 1 |
| 2 | 1001127841 | Boom Weldment, Mid Section | 1 |
| 3 | 1001127836 | Boom Weldment, Fly Section | 1 |
| 4 | 4691000417 | Pin | 1 |
| 5 | 7754000055 | Retaining Ring | 4 |
| 6 | 7440030000 | Grease Fitting | 9 |
| 7 | 4062000522 | Bar | 2 |
| 8 | 7115180850 | Capscrew, 0.50”-13NC x 1.00” | 4 |
| 9 | 7950180000 | Lockwasher, 0.59” ID | 24 |
| 10 | 4062000589 | Bar | 2 |
| 11 | 4754000004 | D-Ring | 7 |
| 12 | 1001129006 | Pin | 2 |
| 13 | 1001129393 | Pin | 1 |
| 14 | 7754000014 | Retaining Ring | 6 |
| 15 | 4691000285 | Pin | 2 |
| 16 | 7690144840 | Pin, Spring | 2 |
| 17 | 7108180850 | Capscrew, 0.50”-20NF x 1.00” | 16 |
| 18 | 4178000811 | Bracket | 8 |
| 19 | 4679000314 | Pad | 6 |
| 20 | 4679000313 | Pad | 2 |
| 21 | 4679000140 | Pad | 2 |
| 22 | 1001129004 | Plate | 1 |
| 23 | 4062000715 | Bar | 2 |
| 24 | 1001129005 | Plate | 1 |
| 25 | 3706000241 | Plate Weldment | 2 |
| 26 | 7320000085 | Extension Cylinder Assembly | 2 |
| 27 | 7950140000 | Lockwasher, 0.25” ID | 16 |
| 28 | 7118140427 | Capscrew, 0.25”-20NC x 0.50” | 8 |
| 29 | 7120000040 | Capscrew, 0.75”-10NC x 2.00” | 8 |
| 30 | 7115180650 | Capscrew, 0.50”-13NC x 0.75” | 4 |
| 31 | 4691000416 | Pin | 1 |
| 32 | 4679000319 | Pad | 2 |
| 33 | 7114141218 | Capscrew, 0.25”-20NC x 1.50” | 4 |
| 34 | 7660142601 | Locknut, 0.25”-20NC | 4 |
| 35 | 4679000326 | Pad | 1 |
| 36 | 7114140818 | Capscrew, 0.25”-20NC x 1.00” | 4 |
| 37 | 7118180820 | Capscrew, 0.50”-13NC x 1.00” | 8 |
| 38 | 7253000002 | Grease Fitting | 9 |
| 39 | 7950180161 | Flatwasher, 0.50” ID | 8 |
| 40 | 7660182601 | Locknut, 0.50”-13NC | 4 |
| 41 | 7115181450 | Capscrew, 0.50”-13NC x 1.75” | 4 |
| 42 | 7470000014 | Gauge, Angle Indicator- LH | 1 |
| 43 | 7470000019 | Gauge, Angle Indicator- RH | 1 |
| 44 | 7114100418 | Capscrew, #10-24NC x 0.50” | 4 |

Eastern Wrecker Sales, Inc.
Clayton, NC
919-553-2038
www.easternwrecker.com

## WRECKER BOOM ASSEMBLY - 3 PIECE

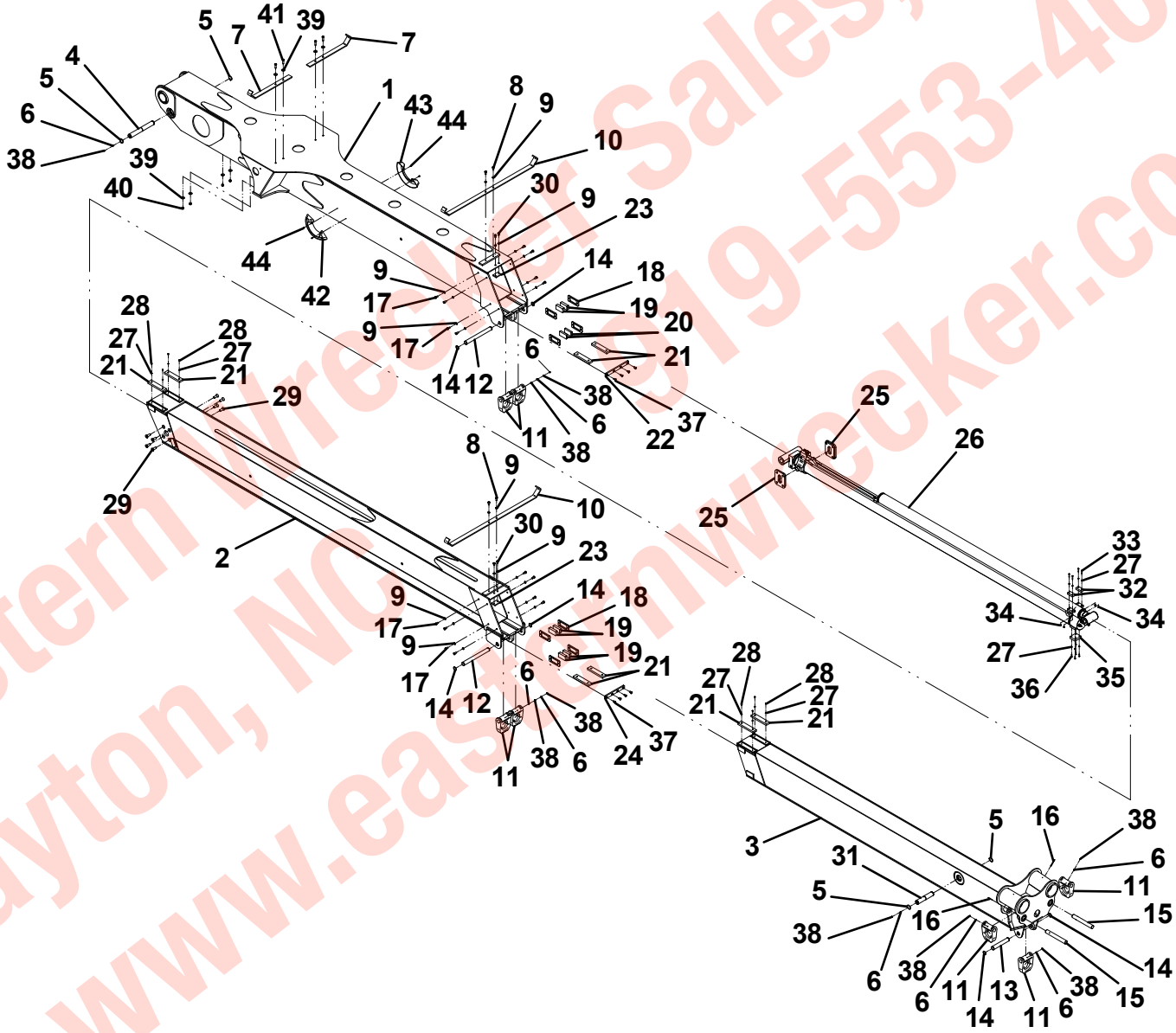


Eastern Wrecker Sales, Inc.
Clayton, NC 919-553-4038
www.easternwrecker.com

## EXTENSION CYLINDER ASSEMBLY - 7320000085

| ITEM | PART NO. | DESCRIPTION | QTY |
|---|---|---|---|
| 1 | 83304143 | Seal, Wiper | 1 |
| 2 | 9796250084 | Seal, Wiper | 1 |
| 3 | 9796250071 | Seal | 1 |
| 4 | 70050556 | Seal | 1 |
| 5 | 70050557 | Seal, “O”Ring | 1 |
| 6 | 70050558 | Seal, “O”Ring | 1 |
| 7 | 9754250009 | Ring, Back-up | 1 |
| 8 | 70050559 | Seal, “O”Ring | 2 |
| 9 | 9754250054 | Ring, Back-up | 1 |
| 10 | 9796250058 | Seal, “O”Ring | 1 |
| 11 | 9796250149 | Seal, “O”Ring | 1 |
| 12 | 70050560 | Seal, “O”Ring | 2 |
| 13 | 70050561 | Seal | 2 |
| 14 | 70050562 | Seal | 1 |
| 15 | 70050563 | Seal | 1 |
| 16 | 70050564 | Seal | 1 |
| 17 | 70050565 | Seal | 1 |
| 18 | 70050566 | Seal, “O”Ring | 2 |
| 19 | 9754250014 | Ring, Wear | 4 |
| 20 | 83304181 | Ring, Wear | 2 |
| 21 | 83304140 | Ring, Wear | 3 |
| 22 | 70050568 | Ring, Wear | 3 |
| 23 | 9754250055 | Ring, Wear | 5 |
| 24 | 70050569 | Kit, Seal | 1 |
| 25 | 70050570* | Seal, “O”Ring | 1 |
| 26 | 70021774 | Setscrew | 4 |
| 27 | 70050572 | Locknut | 2 |
| 28 | 7005365 | Plug, Port | 2 |
| 29 | 70021648 | Plug, Port | 4 |
| 30 | 7023593 | Plug, Port | 5 |
| 31 | 70050574 | Valve, Check | 1 |
| 32 | 70050575 | Valve, Counterbalance | 1 |
| 33 | 70050576 | Valve, Relief | 1 |
| 34 | 70050577 | Valve, Check | 1 |
| 35 | 70050578 | Valve, Directional | 1 |
| 36 | 70050579 | Assembly, Tube | 1 |
| 37 | 70050580 | Assembly, Rod-Tube | 1 |
| 38 | 70050581 | Assembly, Rod-Tube | 1 |
| 39 | 70050582 | Head | 1 |
| 40 | 70050583 | Piston | 1 |
| 41 | 70050584 | Head | 1 |
| 42 | 70050585 | Piston | 1 |
| 43 | 70050586 | Spacer | 1 |
| 44 | 70050587 | Adapter, RT | 1 |
| 45 | 70050588 | Spacer | 1 |
| 46 | 70050589 | Assembly, Valve | 1 |
| 47 | 70050590 | Valve Retainer | 1 |
| 48 | 70050591 | Assembly, Pad Plunger | 1 |
| 49 | 70050592 | Plunger | 1 |

* Not Part of Seal Kit

Eastern Wrecker sales, Inc.
Clayton, NC
919-553-4038
www.easternwrecker.com

## EXTENSION CYLINDER ASSEMBLY - 7320000085

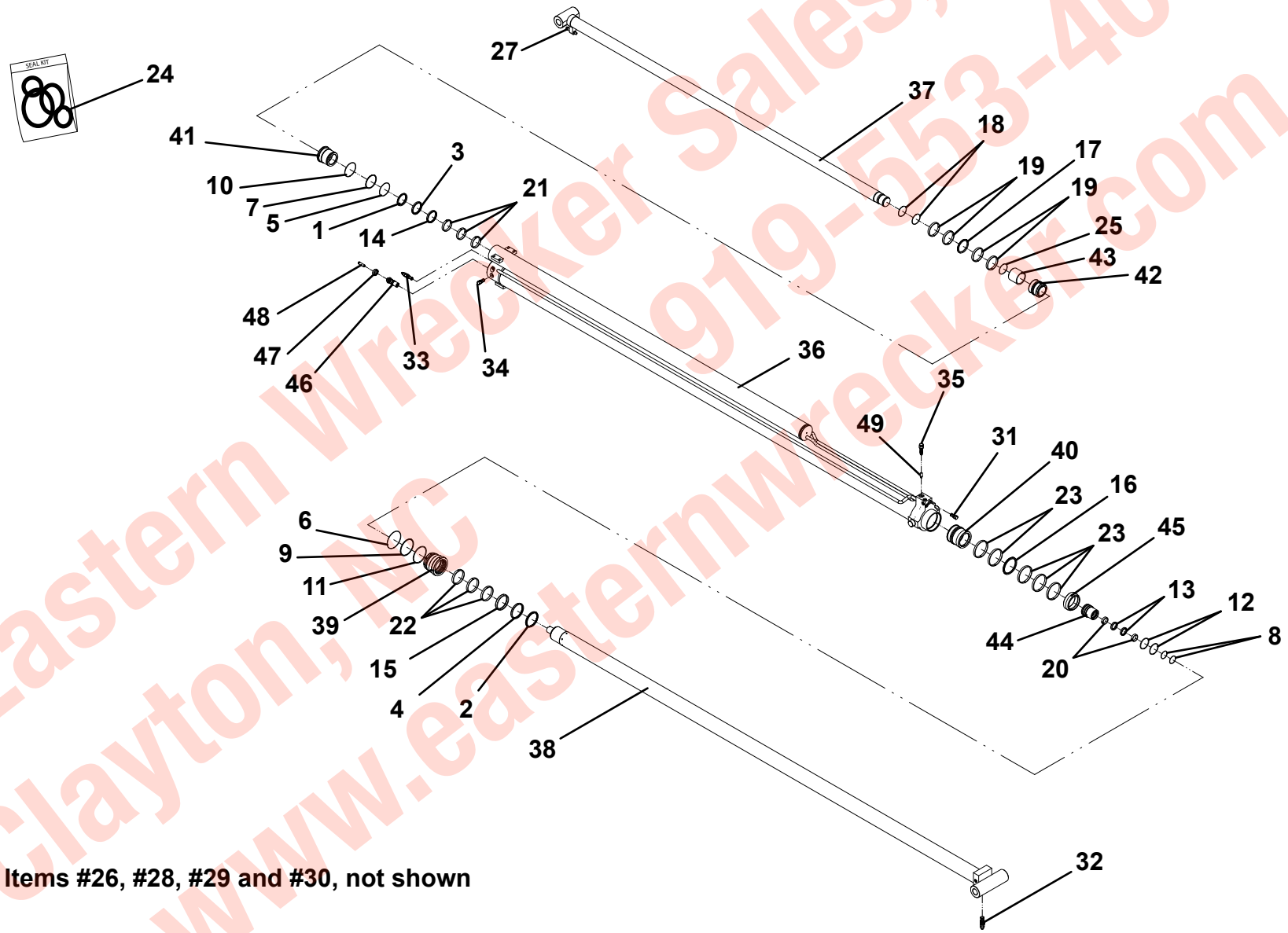


Items #26, #28, #29 and #30, not shown

Eastern Wrecker Sales, Inc.
Clayton, NC 919-553-4038
www.easternwrecker.com

## WINCH INSTALLATION - 2 SPEED 50K RAMSEY

| ITEM | PART NO. | DESCRIPTION | QTY |
|---|---|---|---|
| 1 | 1001128323 | Winch, Ramsey 50K - LH | 1 |
| 2 | 1001129495 | Winch, Ramsey 50K - RH | 1 |
| 3 | 1001129540 | Angle, Winch Front - LH | 1 |
| 4 | 1001129541 | Angle, Winch Rear - LH | 1 |
| 5 | 1001129543 | Angle, Winch Rear - RH | 1 |
| 6 | 3249000046 | Sheave Support Weldment | 2 |
| 7 | 3249000037 | Cable Guide Weldment | 2 |
| 8 | 7809000018 | Sheave, 12” Dia. | 2 |
| 9 | 3691000234 | Pin | 2 |
| 10 | 1001129542 | Angle, Winch Front - RH | 1 |
| 11 | 7660222308 | Locknut, 0.75”-10NC | 32 |
| 12 | 7118221816 | Capscrew, 0.75”-10NC x 2.25” | 16 |
| 13 | 7118222416 | Capscrew, 0.75”-10NC x 3.00” | 16 |
| 14 | 7754000048 | Retaining Ring | 2 |
| 15 | 7754000083 | Retaining Ring | 2 |
| 16 | 4831000108 | Spacer | 6 |
| 17 | 7950180153 | Flatwasher, 0.50” ID | 12 |
| 18 | 7115182850 | Capscrew, 0.50”-13NC x 3.50” | 6 |
| 19 | 7660182601 | Locknut, 0.50”-13NC | 6 |
| 20 | 7440030000 | Grease Fitting | 4 |
| 21 | 7253000002 | Cap, Grease Fitting | 4 |
| 22 | 7248000149 | Cable, 0.75” x 250’ | 2 |
| | 1001135127 | Cable, 0.75” x 250’ w/ Swivel Hook | |

Eastern Wrecker Sales, Inc.
Clayton, NC
919-553-4038
www.easternwrecker.com

## WINCH INSTALLATION - 2 SPEED 50K RAMSEY

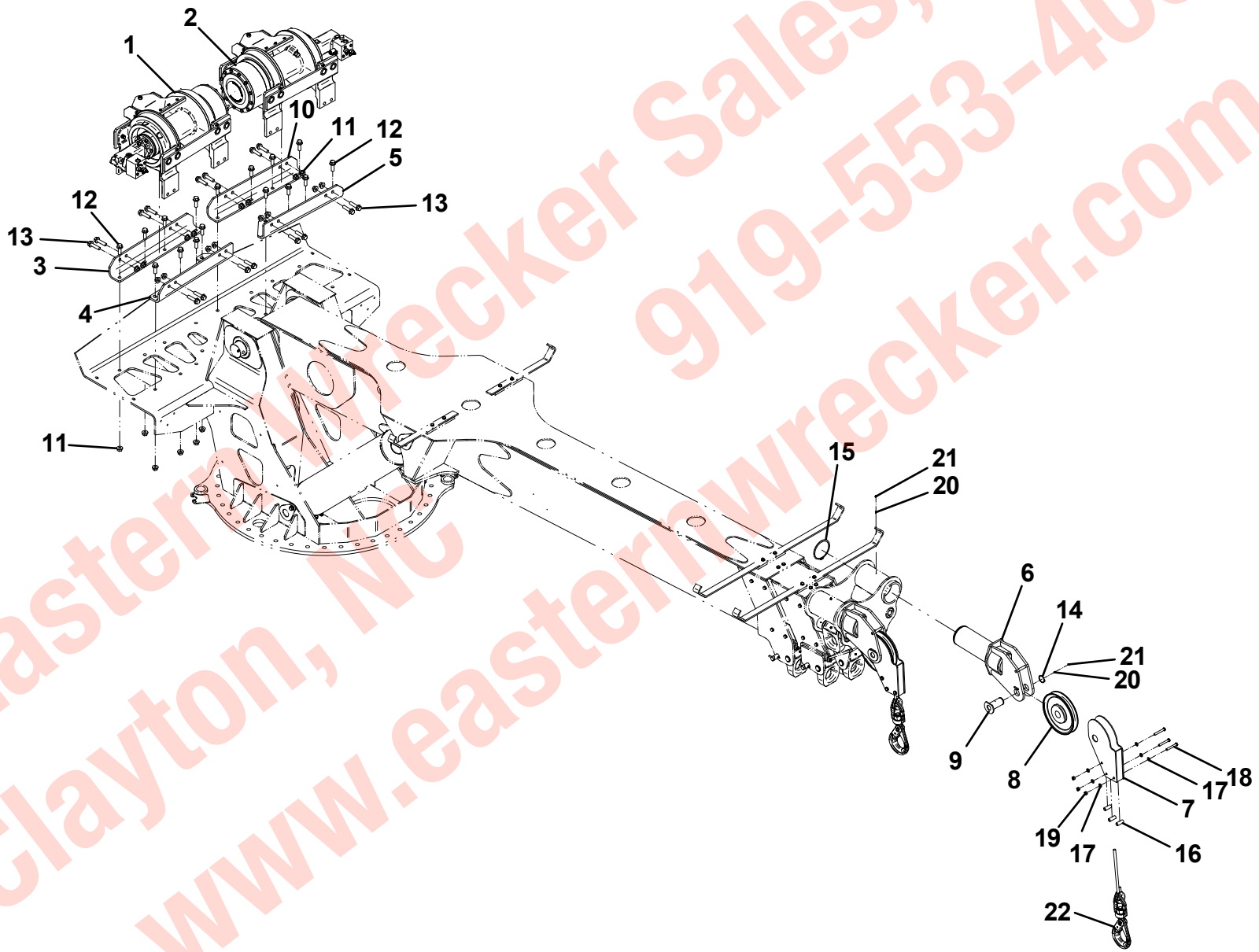


Eastern Wrecker Sales, Inc.
Clayton, NC 919-553-4038
www.easternwrecker.com

## RAMSEY 50K WINCH - 1001128323 & 1001129495

| ITEM | PART NO. | DESCRIPTION | QTY |
|---|---|---|---|
| 1 | 9970960027 | Drum Assembly | 1 |
| 2 | 70050332 | Angle | 1 |
| 3 | 70050333 | Angle | 1 |
| 4 | 70050334 | Coupling | 1 |
| 5 | 70050335 | Gear Housing Cover | 1 |
| 6 | 70050336 | Bearing | 1 |
| 7 | 70050337 | Bearing | 1 |
| 8 | 70050338 | Key | 1 |
| 9 | 70050339 | Clutch | 1 |
| 10 | 70050340 | Clutch Retaining Key | 1 |
| 11 | 70050341 | Input Shaft | 1 |
| 12 | 70050342 | Output Coupling | 1 |
| 13 | 70050343 | Spacer | 1 |
| 14 | 70050344 | Bushing | 1 |
| 15 | 70050345 | Bushing | 1 |
| 16 | 7105163650 | Capscrew, 0.38”-24NF x 4.00” | 4 |
| 17 | 70050346 | Capscrew, 0.50”-13NC x 3.50” | 2 |
| 18 | 7115185650 | Capscrew. 0.50”-13NC x 7.00” | 12 |
| 19 | 7115241650 | Capscrew, 0.88”-9NC x 2.00” | 8 |
| 20 | 70050347 | Capscrew, 0.25”-20NC x 0.50” | 8 |
| 21 | 9120960024 | Capscrew, 0.50”-13NC x 1.25” | 2 |
| 22 | 7785181200 | Setscrew, 0.50”-13NC x 0.75” | 1 |
| 23 | 9949960044 | Lockwasher, 0.88” ID | 8 |
| 24 | 9120960054 | Bolt, 0.50” x 0.75” | 4 |
| 25 | 70050348 | Thrust Washer | 1 |
| 26 | 70050349 | Cylinder | 1 |
| 27 | 70050350 | Piston | 1 |
| 28 | 9443960019 | Fitting | 1 |
| 29 | 70050351 | Brake Assembly | 1 |
| 30 | 9796960157 | Gasket | 3 |
| 31 | 9970456008 | Relief Fitting | 1 |
| 32 | 70050352 | Motor | 1 |
| 33 | 9796960159 | Quad Ring | 2 |
| 34 | 70050353 | O-Ring | 1 |
| 35 | 70050354 | O-Ring | 1 |
| 36 | 70050355 | Pipe Plug | 1 |
| 37 | 70050356 | Pin | 1 |
| 38 | 70050357 | Spring | 9 |
| 39 | 70050358 | Tube Assembly | 1 |

| ITEM | PART NO. | DESCRIPTION | QTY |
|---|---|---|---|
| 40 | 9935960067 | Valve Control (B - Rotation) | 1 |
| | 9935960068 | Valve Control (A - Rotation) | 1 |
| 41 | 70050359 | Gearbox | 1 |
| 42 | 9443960010 | Fitting | 1 |
| 43 | 70050360 | Tensioner Assembly | 1 |
| 44 | 70050396 | Plate Retainer | 1 |

Eastern Wrecker Sales, Inc.
Clayton, NC 919-553-4038
www.easternwrecker.com

## RAMSEY 50K WINCH - 1001128323 & 1001129495

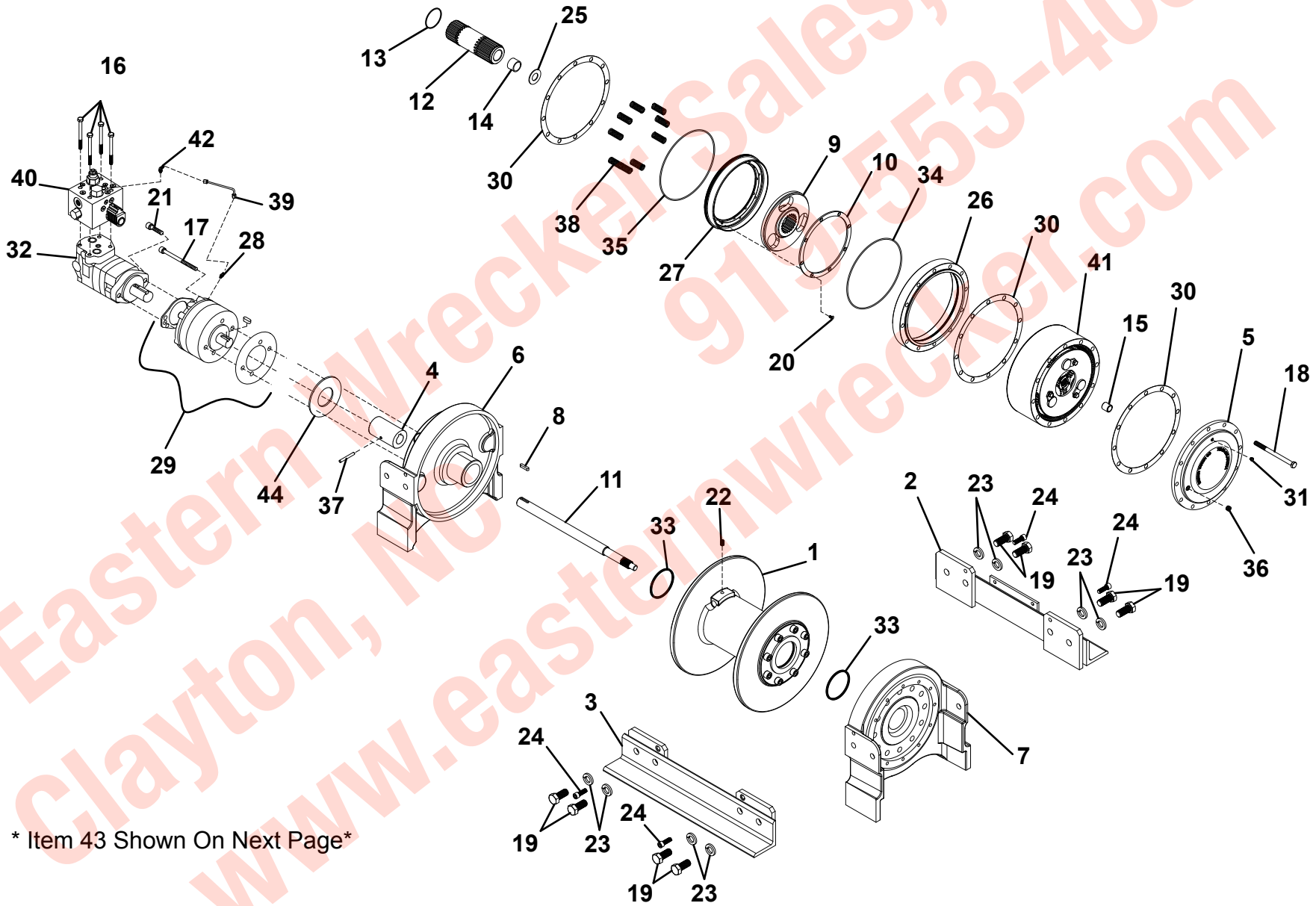


* Item 43 Shown On Next Page*

Eastern Wrecker Sales, Inc.
Clayton, NC 919-553-4038
www.easternwrecker.com

## RAMSEY WINCH CABLE TENSIONER ASSEMBLY - 70050360

| ITEM | PART NO. | DESCRIPTION | QTY |
|---|---|---|---|
| 1 | 70050366 | Plate | 1 |
| 2 | 9064960008 | Rub Bar | 1 |
| 3 | 70050364 | Nut, 0.50”-16NF | 2 |
| 4 | 9691960032 | Pin | 1 |
| 5 | 4691960030 | Cotter Pin | 2 |
| 6 | 9970418177 | Lockwasher, 0.38” ID | 2 |
| 7 | 70050364 | Capscrew, 0.38” x 1.25” | 2 |
| 8 | 9120960042 | Capscrew, 0.38” x 0.75” | 5 |
| 9 | 70050363 | Nut, 0.38” | 2 |
| 10 | 70050362 | Bracket, Air Tensioner | 1 |
| 11 | 70050361 | Air Actuator | 2 |
| 12 | 9443960021 | Fitting | 1 |
| 13 | 9570960005 | Tube | 1 |
| 14 | 9443960020 | Tee | 1 |

Eastern Wrecker Sales, Inc.
Clayton, NC
919-553-4038
www.easternwrecker.com

## RAMSEY WINCH CABLE TENSIONER ASSEMBLY - 70050360

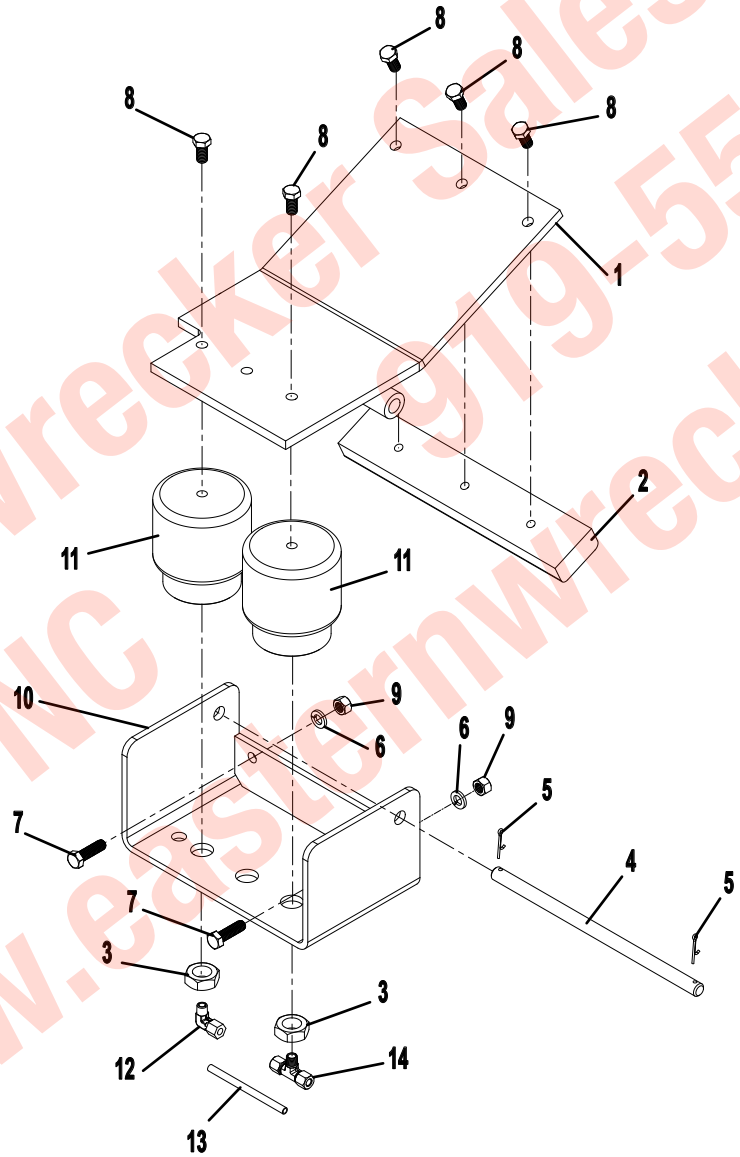


Eastern Wrecker Sales, Inc.
Clayton, NC 919-553-4038
www.easternwrecker.com

## WINCH INSTALLATION - 2 SPEED 50K DP

| ITEM | PART NO. | DESCRIPTION | QTY |
|---|---|---|---|
| 1 | 1001145566 | Winch, DP 50K - LH | 1 |
| 2 | 7970000169 | Winch, DP 50K - RH | 1 |
| 3 | 1001145521 | Angle, Winch Front - LH | 1 |
| 4 | 1001145522 | Angle, Winch Rear - LH | 1 |
| 5 | 1001145523 | Angle, Winch Front - LH | 1 |
| 6 | 1001145524 | Angle, Winch Front - RH | 1 |
| 7 | 3249000046 | Sheave Support Weldment | 2 |
| 8 | 3249000037 | Cable Guide Weldment | 2 |
| 9 | 7809000018 | Sheave, 12” Dia. | 2 |
| 10 | 3691000234 | Pin | 2 |
| 11 | 7660222308 | Locknut, 0.75”-10NC | 32 |
| 12 | 7118221816 | Capscrew, 0.75”-10NC x 2.25” | 16 |
| 13 | 7118222816 | Capscrew, 0.75”-10NC x 3.50” | 16 |
| 14 | 7754000048 | Retaining Ring | 2 |
| 15 | 7754000083 | Retaining Ring | 2 |
| 16 | 4831000108 | Spacer | 6 |
| 17 | 7950180153 | Flatwasher, 0.50” ID | 12 |
| 18 | 7115182850 | Capscrew, 0.50”-13NC x 3.50” | 6 |
| 19 | 7660182601 | Locknut, 0.50”-13NC | 6 |
| 20 | 7440030000 | Grease Fitting | 4 |
| 21 | 7253000002 | Cap, Grease Fitting | 4 |
| 22 | 7248000149 | Cable, 0.75” x 250’ | 2 |
| | 1001135127 | Cable, 0.75” x 250’ w/ Swivel Hook | |

Eastern Wrecker Sales, Inc.
Clayton, NC
919-553-4038
www.easternwrecker.com

## WINCH INSTALLATION - 2 SPEED 50K DP

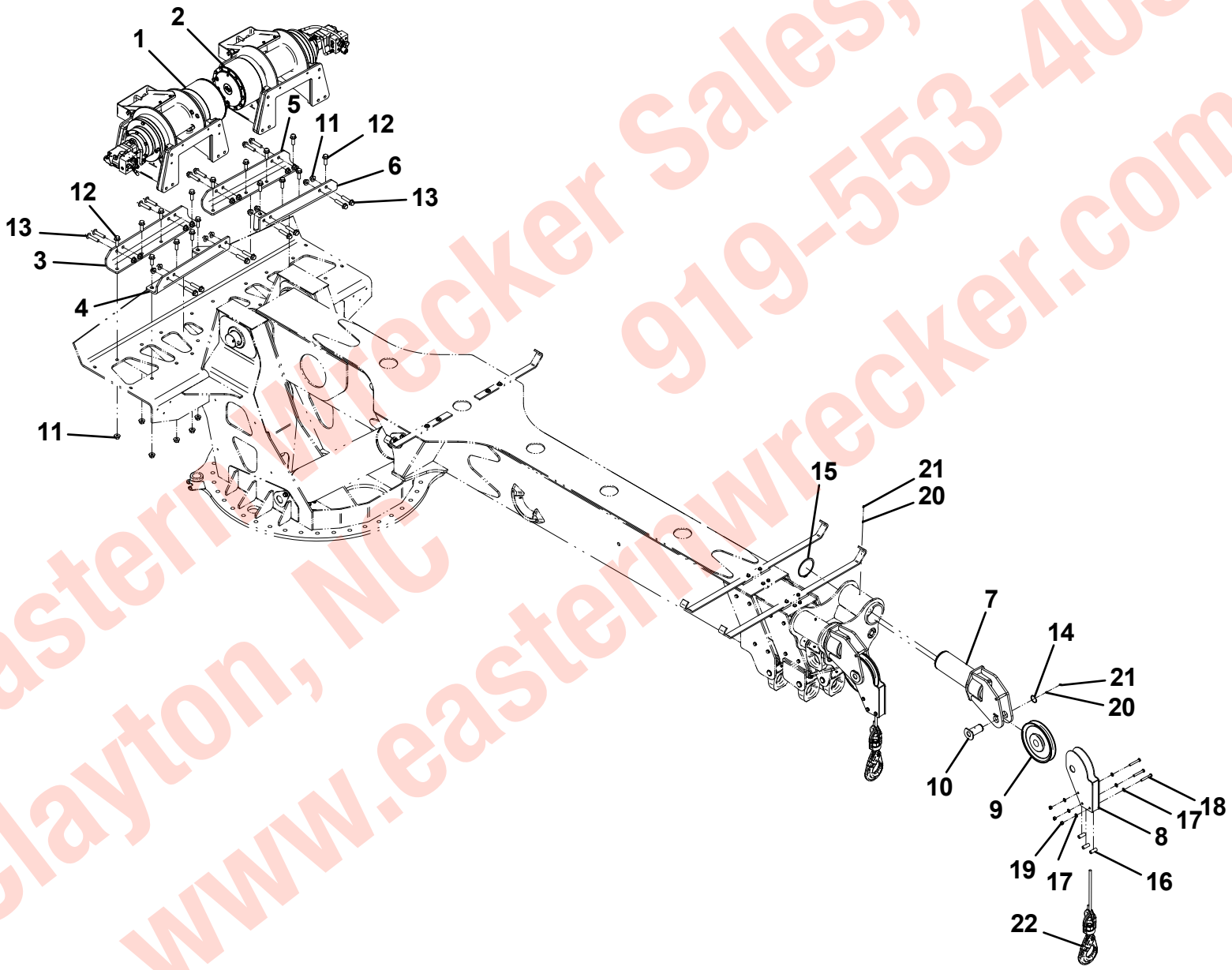


Eastern Wrecker Sales, Inc.
Clayton, NC 919-553-4038
www.easternwrecker.com

## DP WINCH 50K - MOTOR END INSTALLATION

| ITEM | PART NO. | DESCRIPTION | QTY |
|---|---|---|---|
| 1 | 70050367 | Motor, Hydraulic | 1 |
| 2 | 7118181205 | Capscrew, 0.50”-13NC x 1.50” | 2 |
| 3 | 7950180800 | Lockwasher, 0.50” | 2 |
| 4 | 70050368 | Valve, Counterbalance | 1 |
| 5 | 70050370 | Capscrew, 0.38”-24NF x 2.50” | 4 |
| 6 | 9571960006 | Housing, Brake Outer | 1 |
| 7 | 7118172050 | Capscrew, 0.44” x 2.50” | 6 |
| 8 | 7950170000 | Lockwasher, 0.44” | 6 |
| 9 | 9698960008 | Piston, Brake | 1 |
| 10 | 9806960013 | Shaft, Brake | 1 |
| 11 | ** | Plate, Friction Disk | 10 |
| 12 | ** | Plate, Brake Drive | 9 |
| 13 | 9691960021 | Pin | 2 |
| 14 | > | O-Ring, 5.38” ID | 2 |
| 15 | > | O-Ring, 6.50” ID | 1 |
| 16 | > | Ring, 5.28” ID | 1 |
| 17 | > | Ring, 6.25” ID | 1 |
| 18 | 70050371 | Cartridge, Valve | 1 |
| 19 | 9082960013 | Bearing | 2 |
| 20 | > | O-Ring, 6.75” ID | 1 |
| 21 | 9796960090 | O-Ring, 3.00” ID | 1 |
| 22 | ** | Spring | 12 |
| 23 | 7007960040 | Adapter, Brake | 1 |
| 24 | 9472960032 | Gear, Ring 92 Teeth | 1 |
| 25 | 9472960029 | Carrier, Planetary Assembly | 1 |
| 26 | 9472960033 | Gear, Sun | 1 |
| 27 | 9806960014 | Shaft, Extension | 1 |
| 28 | 9796960085 | O-Ring, 10.50” ID | 2 |
| 29 | 9706960027 | Plate, Thrust - 45 | 1 |
| 30 | 9082960014 | Bearing | 1 |
| 31 | 9796960087 | Seal, 3.25” ID | 1 |
| 32 | 9754960029 | Retainer Ring | 1 |
| 33 | 7445040445 | Adapter | 3 |
| 34 | 70050372 | Hose, 0.25” - R1 x 16.00” | 1 |
| 35 | 7115182250 | Capscrew, 0.50”-13NC x 2.75” | 4 |
| 36 | 7950180000 | Lockwasher, 0.50” ID | 4 |
| 37 | 9183960001 | Vent | 1 |
| 38 | 9701960010 | Plug | 2 |
| 39 | 9177960002 | Support, Motor End | 1 |
| 40 | 9443960006* | Adapter | 1 |
| 41 | 9935960026 | Cartridge, Counterbalance | 1 |
| 42 | 9701960013 | Plug Assembly | 1 |
| 43 | 70050373 | Hose, 0.25” - R1 x 14.00” | 1 |
| 44 | 70050369 | O-Ring, 1.12” ID | 2 |
| 45 | 9796960088 | O-Ring, 0.81” ID | 2 |

* Item Not Shown
** Items Sold Only As Part Of Kit - 9577960119
> Items Sold Only As Part Of Kit - 9577960120

Eastern Wrecker Sales, Inc.
Clayton, NC 919-553-4038
www.easternwrecker.com

## DP WINCH 50K - MOTOR END INSTALLATION

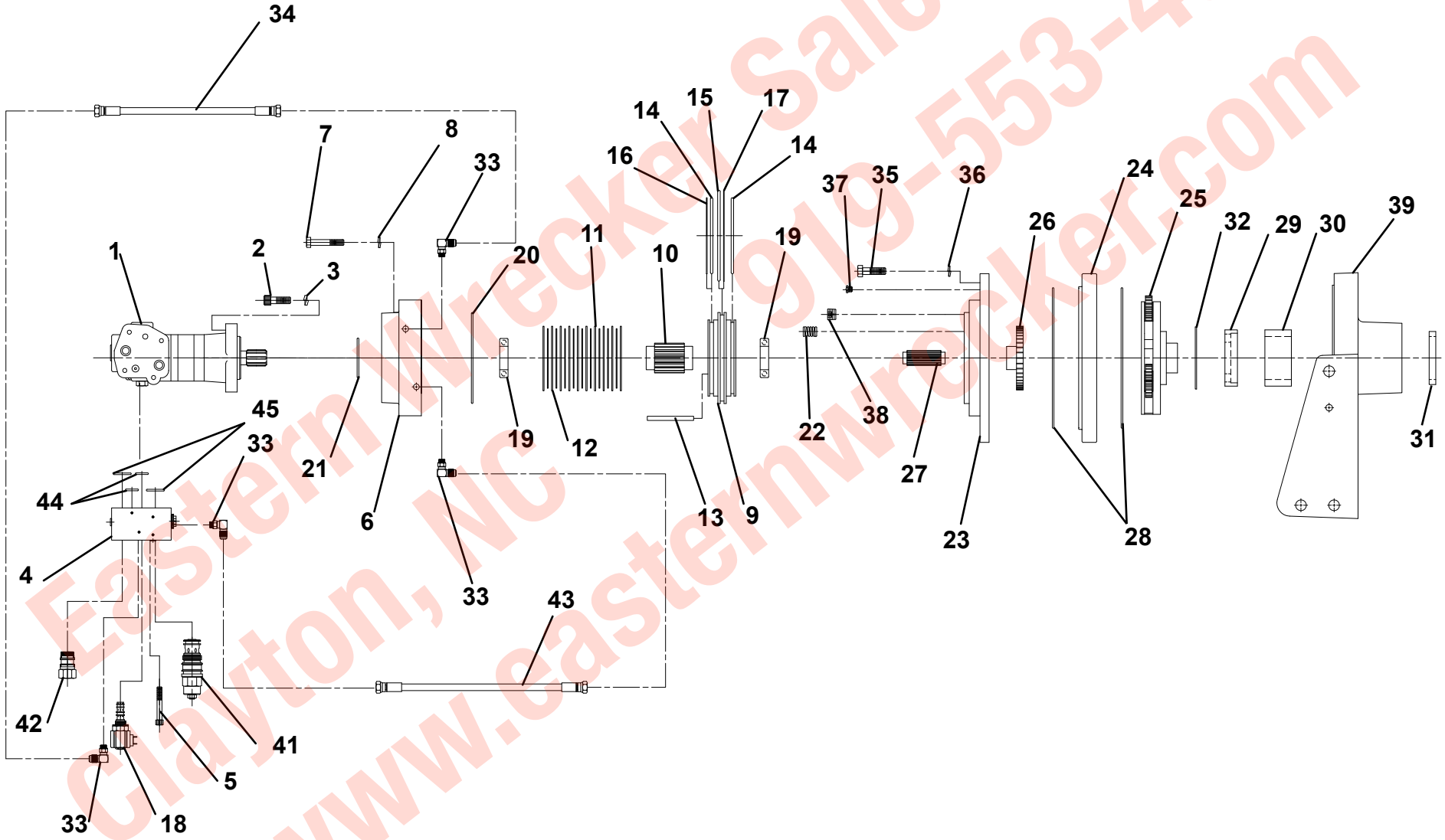


Eastern Wrecker Sales, Inc.
Clayton, NC 919-553-4038
www.easternwrecker.com

## DP WINCH 50K - DRUM INSTALLATION

| ITEM | PART NO. | DESCRIPTION | QTY |
|---|---|---|---|
| 1 | 70050381 | Drum, Winch | 1 |
| 2 | 70050382 | Key, Shaft Output | 2 |
| 3 | 70050383 | Retaining Ring | 2 |
| 4 | 9280960002 | Clip, Cable - Threaded | 1 |
| 5 | 7110201823 | Capscrew, 0.63”-11NC x 2.25” | 2 |

Eastern Wrecker Sales, Inc.
919-553-4038
Clayton, NC
www.easternwrecker.com

## DP WINCH 50K - DRUM INSTALLATION

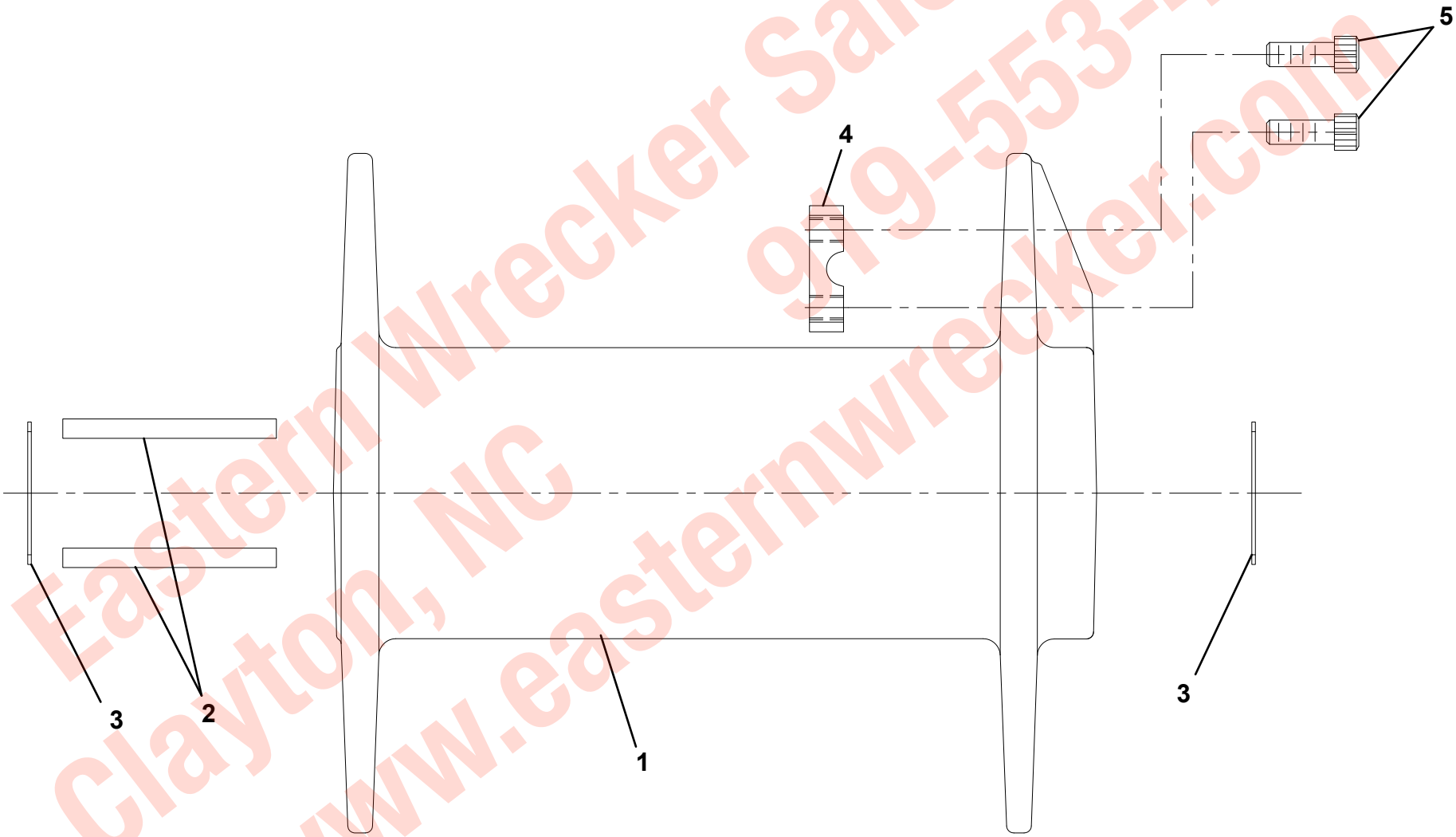


Eastern Wrecker Sales, Inc.
919-553-4038
Clayton, NC
www.easternwrecker.com

## DP WINCH 50K - GEAR END INSTALLATION

| ITEM | PART NO. | DESCRIPTION | QTY |
|---|---|---|---|
| 1 | 9177960001 | Support, Gear End | 1 |
| 2 | 9472960036 | Gear, Ring - 103 Teeth | 1 |
| 3 | 9281960004 | Clutch | 1 |
| 4 | 9698960009 | Piston | 1 |
| 5 | 9472960030 | Carrier Assembly | 1 |
| 6 | 9806960015 | Shaft, Output | 1 |
| 7 | 70050380 | Gear, Sun | 1 |
| 8 | 9154960027 | Ring, Thrust | 1 |
| 9 | 9082960014 | Bearing, Roller | 1 |
| 10 | 9796960087 | Seal | 1 |
| 11 | 9754960029 | Retaining Ring | 1 |
| 12 | 9698960010 | Piston Retainer | 3 |
| 13 | 9843960025 | Spring | 3 |
| 14 | 9796960093 | O-Ring, 9.75” ID | 2 |
| 15 | 9796960085 | O-Ring, 10.50” ID | 1 |
| 16 | 9949960013 | Washer, Nylon 4.25” OD | 1 |
| 17 | 7690153245 | Pin | 2 |
| 18 | 7115150650 | Capscrew, 0.32”-18NC x 0.75” | 6 |
| 19 | 9949960050 | Lockwasher, 0.32” ID | 6 |

Eastern Wrecker Sales, Inc.
919-553-4038
Clayton, NC
www.easternwrecker.com

## DP WINCH 50K - GEAR END INSTALLATION

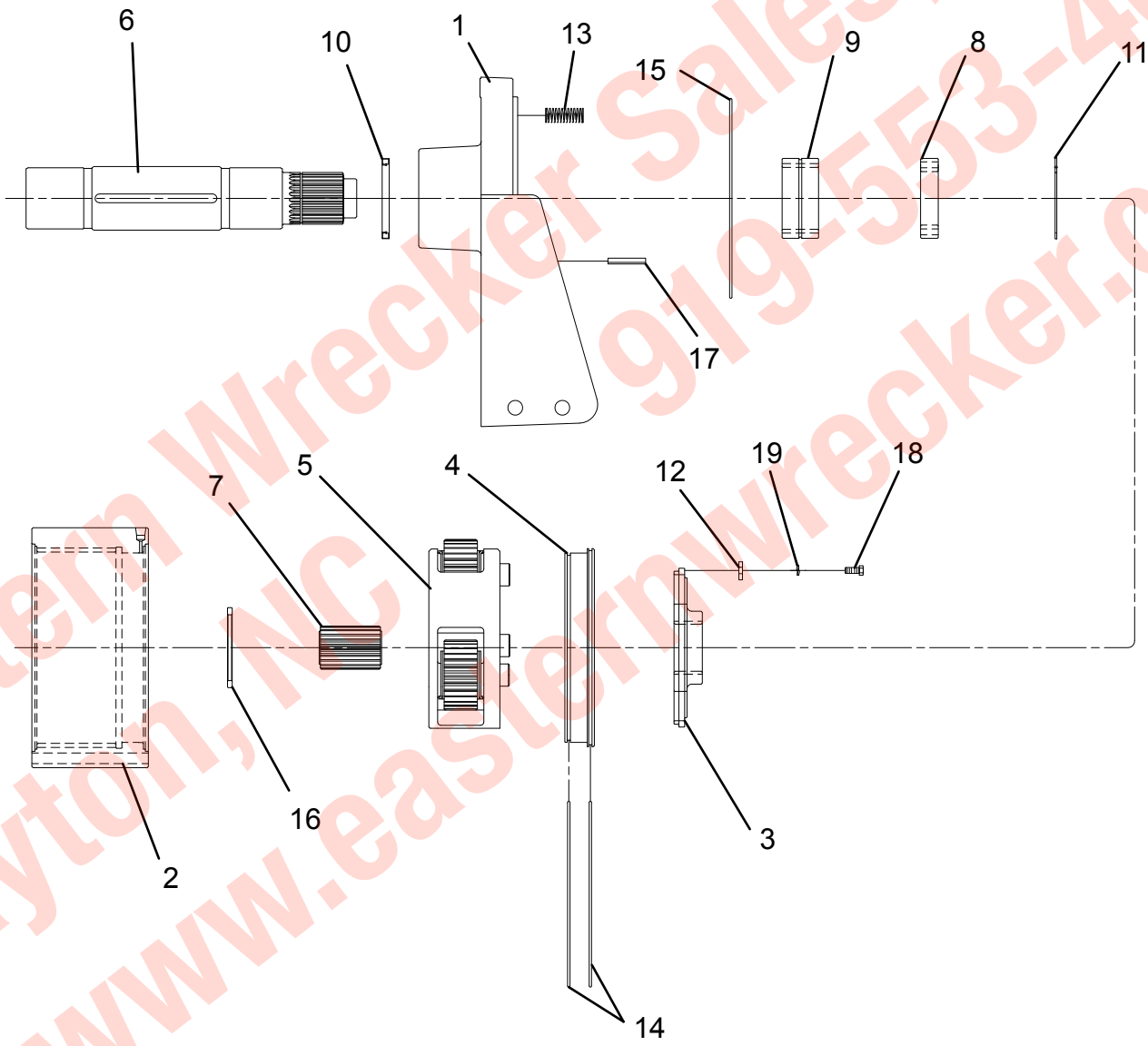


Eastern Wrecker Sales, Inc.
Clayton, NC 919-553-4038
www.easternwrecker.com

## DP WINCH 50K - INPUT SHAFT

| ITEM | PART NO. | DESCRIPTION | QTY |
|---|---|---|---|
| 1 | 70050374 | Input Shaft | 1 |

Eastern Wrecker Sales, Inc.
919-553-4038
Clayton, NC
www.easternwrecker.com

## DP WINCH 50K - INPUT SHAFT

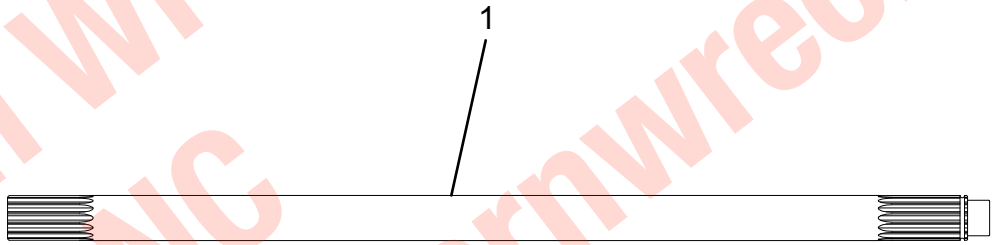


Eastern Wrecker Sales, Inc.
919-553-4038
Clayton, NC
www.easternwrecker.com

## DP WINCH 50K - BASE MOUNT INSTALLATION

| ITEM | PART NO. | DESCRIPTION | QTY |
|---|---|---|---|
| 1 | 9073960002 | Base, Mount | 2 |
| 2 | 7115222450 | Capscrew, 0.75”-10NC x 3.00” | 4 |
| 3 | 7660220001 | Nut, 0.75”-10NC | 12 |
| 4 | 7950220000 | Lockwasher, 0.75” ID | 8 |
| 5 | 9120960020 | Bolt, 0.50” x 2.00” | 4 |
| 6 | 9661960033 | Nut, 0.38”-16NC | 4 |
| 7 | 9949960051 | Flatwasher, 0.38” ID | 4 |
| 8 | 70050384 | Plate, Winch Information | 1 |
| 9 | 70050147 | Rivet | 4 |
| 10 | 7115222650 | Capscrew, 0.75”-10NC x 3.25” | 8 |
| 11 | 7950220151 | Flatwasher, 0.75” ID | 4 |
| 12 | 9831960007 | Spacer | 4 |
| 13 | 9577960113 | Kit, Cable Hold Down | 1 |

Eastern Wrecker Sales, Inc.
919-553-4038
Clayton, NC
www.easternwrecker.com

## DP WINCH 50K - BASE MOUNT INSTALLATION

**Items #8, #9, and #13, not shown**

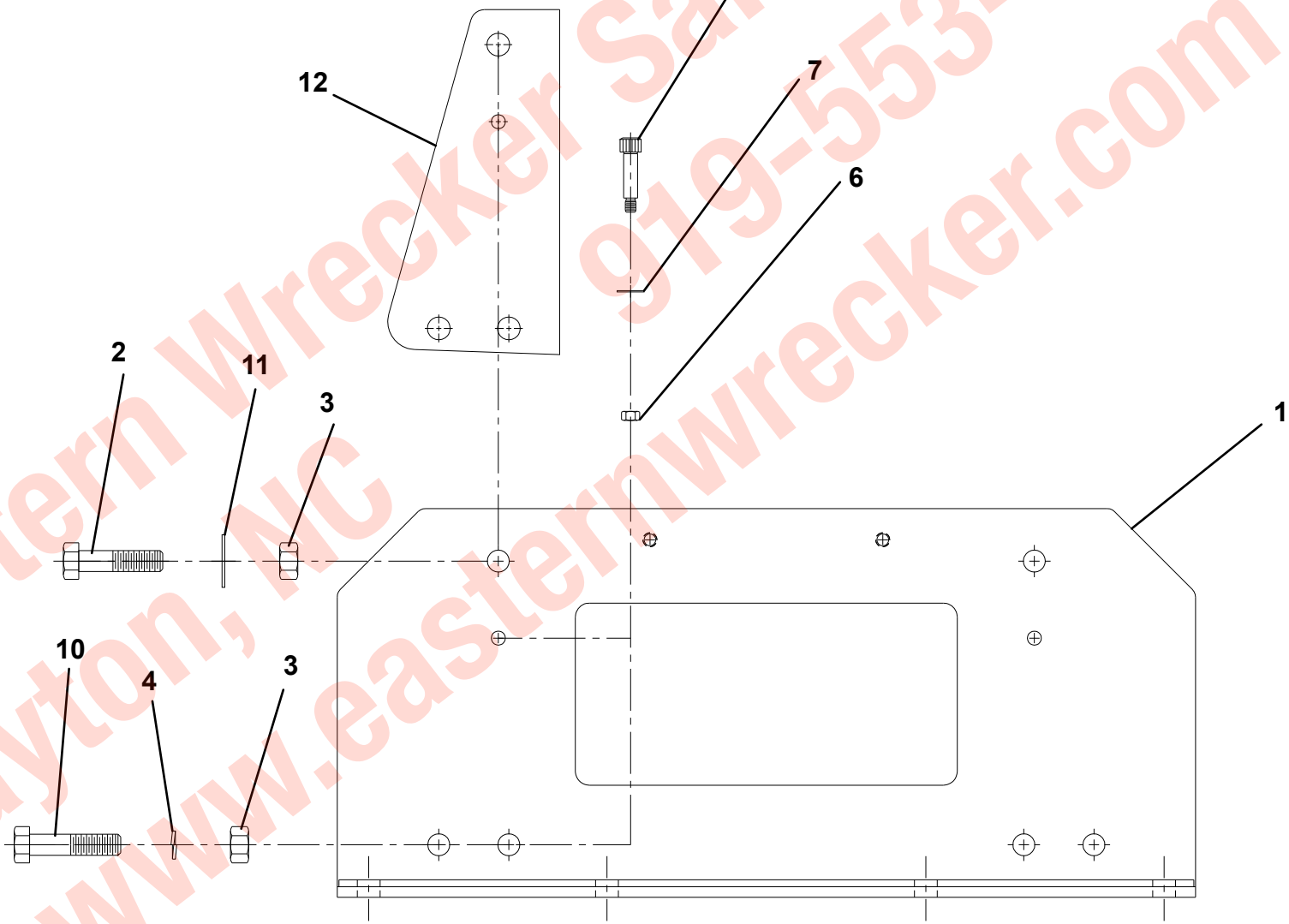


Eastern Wrecker Sales, Inc.
Clayton, NC 919-553-4038
www.easternwrecker.com

## DP WINCH 50K - GEAR END COVER INSTALLATION

| ITEM | PART NO. | DESCRIPTION | QTY |
|---|---|---|---|
| 1 | 70050375 | Cover | 1 |
| 2 | 70050376 | Gear, Sun Primary 29 Teeth | 1 |
| 3 | 9949960013 | Washer, Thrust - Nylon 4.25” OD x .25” | 1 |
| 4 | 9082960015 | Bearing | 1 |
| 5 | 9754960030 | Retaining Ring | 1 |
| 6 | 9796960085 | O-Ring, 10.50” ID | 1 |
| 7 | 70050377 | Capscrew, 0.50”-13NC x 7.50” | 10 |
| 8 | 7950180000 | Lockwasher, 0.50” ID | 10 |
| 9 | 9183960001 | Vent | 1 |
| 10 | 9701960012 | Plug | 1 |
| 11 | 9701960011 | Plug | 1 |
| 12 | 70050378 | Carrier Assembly | 1 |
| 13 | 70050379 | Capscrew, 0.50”-13NC x 7.00” | 2 |

Eastern Wrecker Sales, Inc.
Clayton, NC
919-553-4038
www.easternwrecker.com

## DP WINCH 50K - GEAR END COVER INSTALLATION

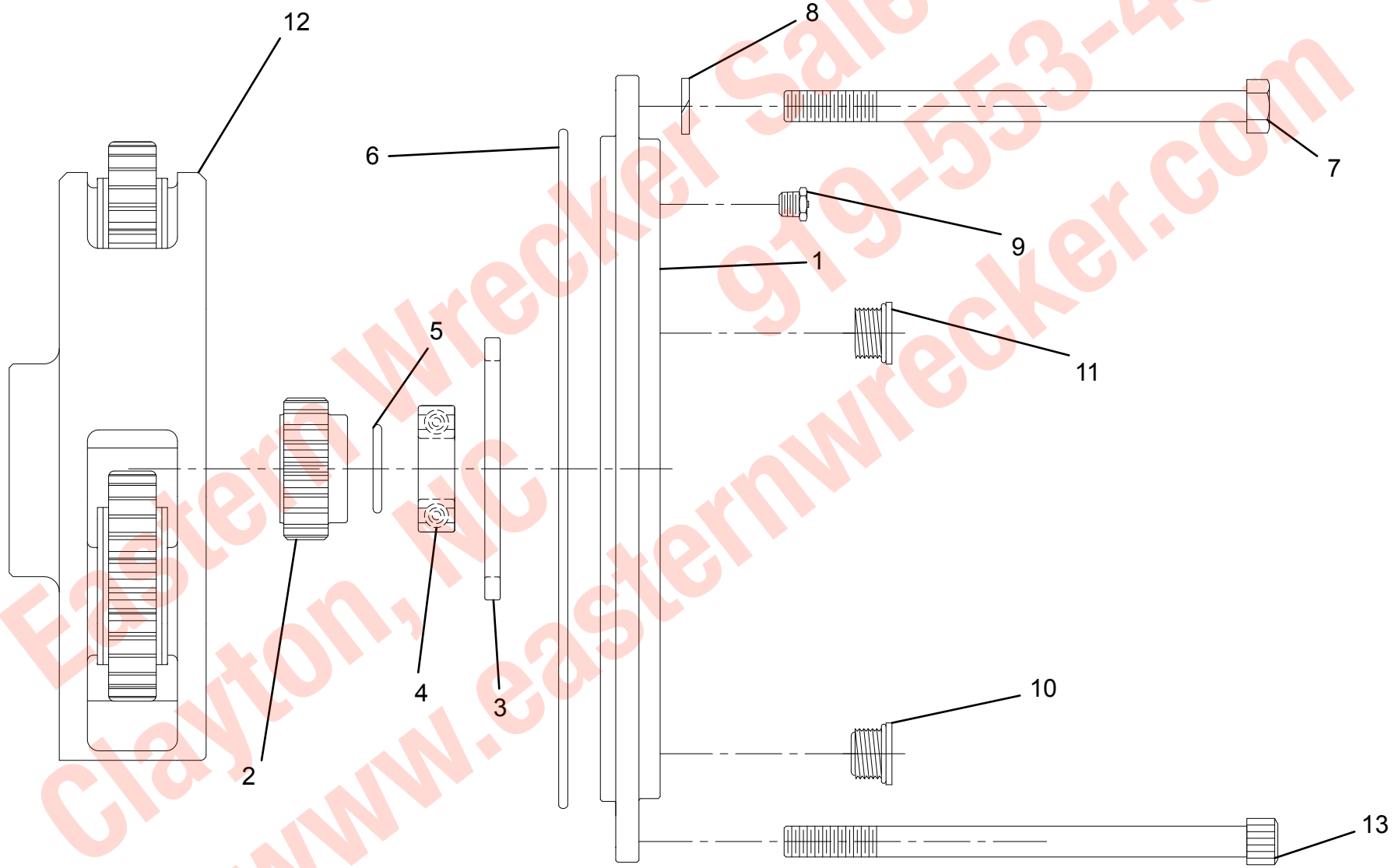


Eastern Wrecker Sales, Inc.
Clayton, NC 919-553-4038
www.easternwrecker.com

## DP WINCH 50K - CABLE HOLD DOWN KIT

| ITEM | PART NO. | DESCRIPTION | QTY |
|---|---|---|---|
| 1 | 9178960011 | Bracket | 1 |
| 2 | 9064960001 | Bar | 1 |
| 3 | 9691960019 | Pin | 1 |
| 4 | 9020960002 | Arm, Pivot | 1 |
| 5 | 9690960039 | Cotter Pin | 2 |
| 6 | 9843960023 | Spring, Air Cushion | 2 |
| 7 | 9831960009 | Spacer | 1 |
| 8 | 7660200200 | Nut, 0.63”-11NC | 4 |
| 9 | 9912960010 | Tubing | 1 |
| 10 | 7443000205 | Adapter | 1 |
| 11 | 7443000204 | Adapter | 1 |
| 12 | 9949960050 | Lockwasher, 0.63” ID | 3 |
| 13 | 9120960063 | Capscrew, 0.63”-18NC x 1.00” | 3 |
| 14 | 9949960012 | Washer | 2 |
| 15 | 7115181650 | Capscrew, 0.50”-13NC x 1.00” | 2 |
| 16 | 7950180000 | Lockwasher, 0.50” ID | 2 |
| 17 | 9120960019 | Bolt, 0.63” x 6.50” 90 Degree | 1 |
| 18 | 7950200151 | Flatwasher, 0.63” ID | 2 |
| 19 | 7660200001 | Nut, 0.63”-11NC | 1 |
| 20 | 70050385 | Flatwasher, 0.50” ID | 2 |

All items can be purchased as Assembly 9577960113

Eastern Wrecker Sales, Inc.
Clayton, NC 919-553-4038
www.easternwrecker.com

## DP WINCH 50K - CABLE HOLD DOWN KIT

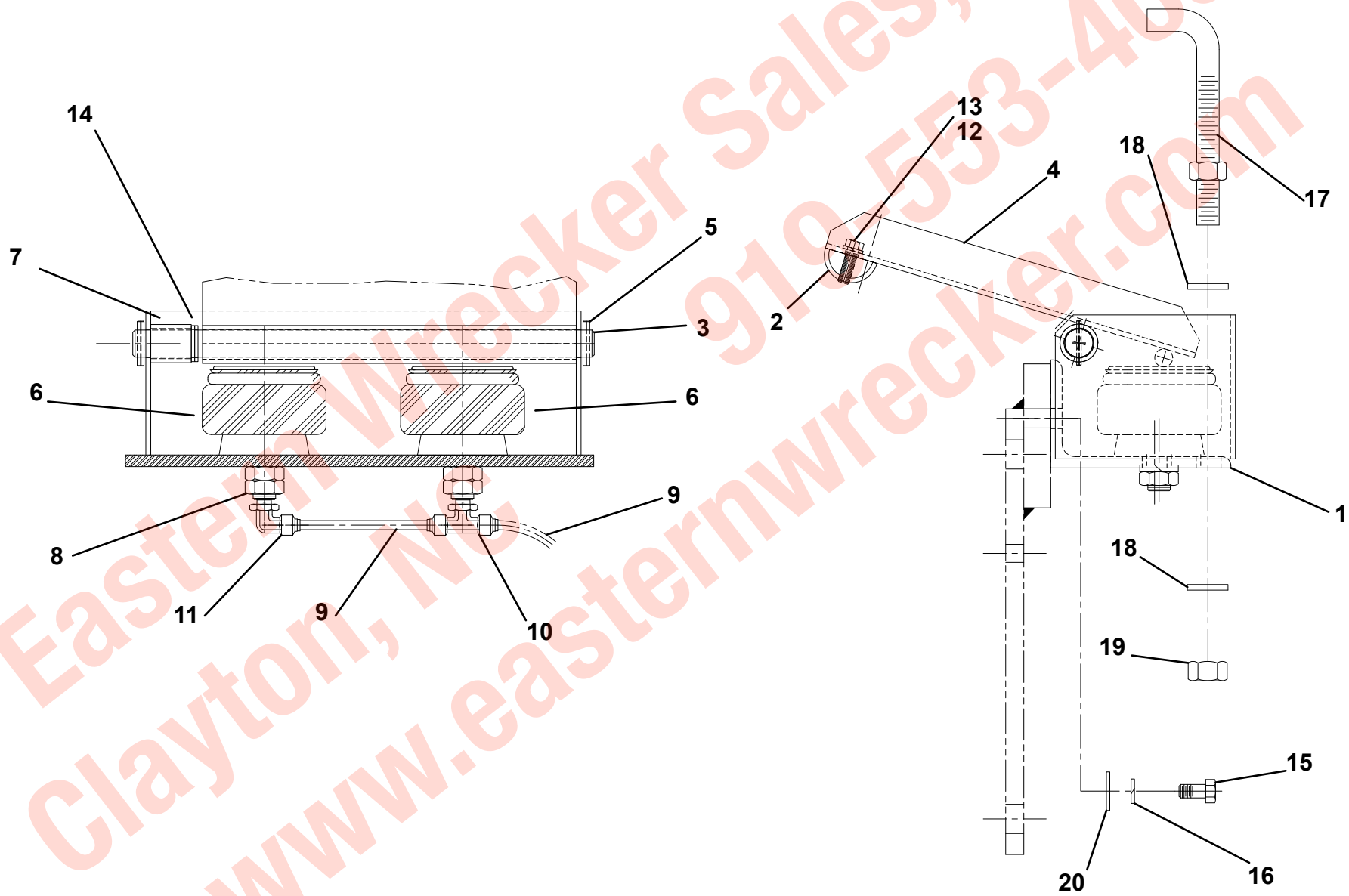


Eastern Wrecker Sales, Inc.
Clayton, NC 919-553-4038
www.easternwrecker.com

## UNDERLIFT BOOM INSTALLATION - 30,000/35,000 LB

| ITEM | PART NO. | DESCRIPTION | QTY |
|---|---|---|---|
| 1 | 1001128440 | Underlift Knee Boom | 1 |
| 2 | 1001128450 | Bracket, Lift Cylinder Support | 1 |
| 3 | 7320000040 | Underlift Lift Cylinder Assembly | 1 |
| 4 | 3691000171 | Pin | 2 |
| 5 | 7950180161 | Flatwasher, 0.50” ID | 2 |
| 6 | 7950180000 | Lockwasher, 0.59” ID | 2 |
| 7 | 7115181250 | Capscrew, 0.50”-13NC x 1.50” | 1 |
| 8 | 7115180850 | Capscrew, 0.50”-13NC x 1.00” | 1 |
| 9 | 1001128697 | Pin | 1 |
| 10 | 7950220141 | Flatwasher, 0.75” ID | 18 |
| 11 | 0682212 | Capscrew, 0.75”-10NC x 1.50” | 16 |
| 12 | 7660222601 | Locknut, 0.75”-10NC | 1 |
| 13 | 0682248 | Capscrew, 0.75”-10NC x 6.00” | 1 |
| 14 | 7440030000 | Grease Fitting | 5 |
| 15 | 7253000002 | Cap, Grease Fitting | 5 |
| 16 | 7262000025 | Chain | 2 |
| 17 | 7660202601 | Locknut, 0.63”-11NC | 2 |
| 18 | 7115201250 | Capscrew, 0.63”-11NC x 1.50” | 2 |
| 19 | 3561000017 | Hook, Weldment | 2 |
| 20 | 7950160141 | Flatwasher, 0.38” ID | 4 |
| 21 | 7115161450 | Capscrew, 0.38”-16NC x 1.75” | 4 |
| 22 | 1001129534 | Pad, Top | 2 |
| 23 | 1001129535 | Pad, Bottom | 2 |
| 24 | 7115161223 | Capscrew, 0.38”-16NC x 1.50” | 8 |
| 25 | 1001151184 | Decal, Wear - LH | 1 |
| 26 | 1001151185 | Decal, Wear - RH | 1 |
| 27 | 1001151049 | Decal, Wear | 1 |
| 28 | 1001128160 | Bushing | 2 |

Eastern Wrecker Sales, Inc.
Clayton, NC 919-553-4038
www.easternwrecker.com

## UNDERLIFT BOOM INSTALLATION - 30,000/35,000 LB

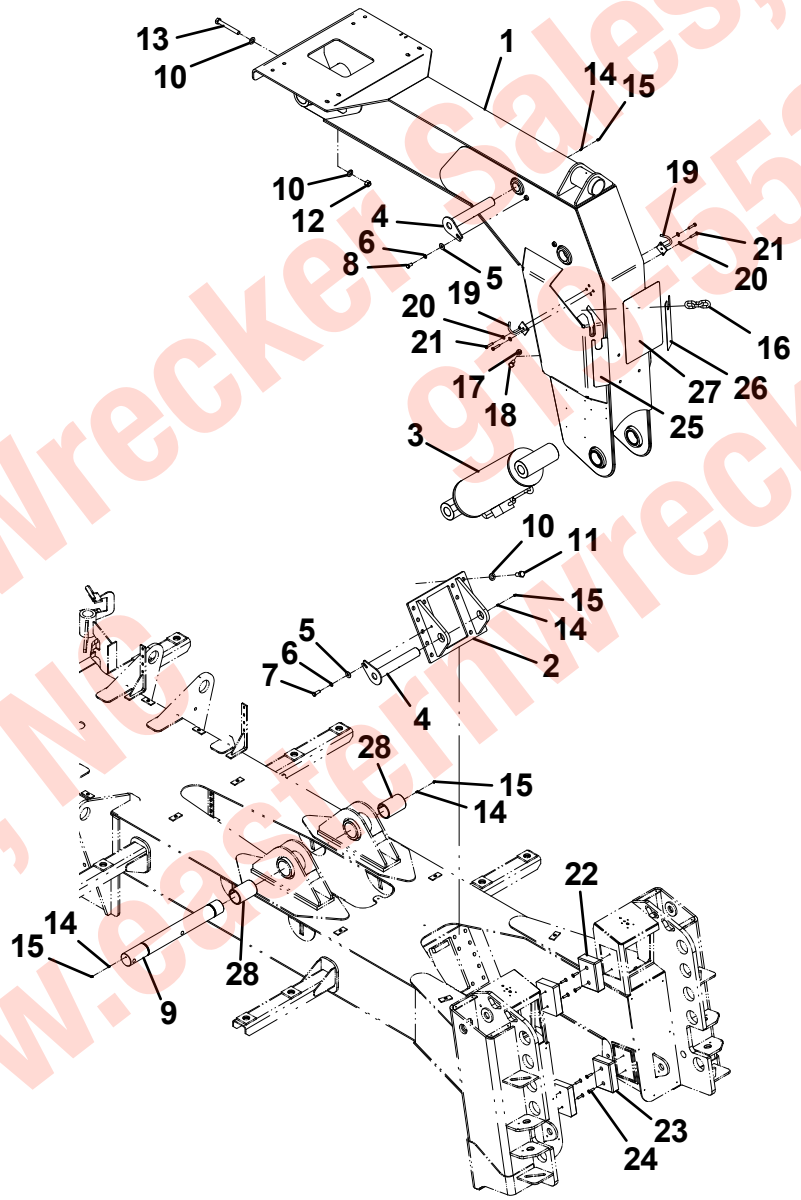


Eastern Wrecker Sales, Inc.
Clayton, NC 919-553-4038
www.easternwrecker.com

## UNDERLIFT LIFT CYLINDER ASSEMBLY - 7320000040

| ITEM | PART NO. | DESCRIPTION | QTY |
|---|---|---|---|
| 1 | 9796250071 | Seal | 1 |
| 2 | 9754250043 | Ring, Back-up | 1 |
| 3 | 9796250062 | Seal, “O” Ring | 1 |
| 4 | 9796250113 | Seal | 1 |
| 5 | 9796250124 | Seal, “O” Ring | 1 |
| 6 | 9796250125 | Seal, Wiper | 1 |
| 7 | 9796250117 | Seal, “O” Ring | 1 |
| 8 | 83304140 | Ring, Wear | 3 |
| 9 | 9754250045 | Ring, Wear | 4 |
| 10 | 7019892 | Head | 1 |
| 11 | 7005314 | Locknut | 1 |
| 12 | 7005348 | Grease Fitting | 1 |
| 13 | 7005365 | Plug, Port | 1 |
| 14 | 70021648 | Plug, Port | 2 |
| 15 | 70050216 | Valve, Counterbalance | 1 |
| 16 | 9912250018 | Assembly, Tube | 1 |
| 17 | 9763250022 | Assembly, Rod | 1 |
| 18 | 9698250017 | Piston | 1 |
| 19 | 7577250255 | Kit, Seal | 1 |

Eastern Wrecker Sales, Inc.
Clayton, NC
919-553-4038
www.easternwrecker.com

## UNDERLIFT LIFT CYLINDER ASSEMBLY - 7320000040

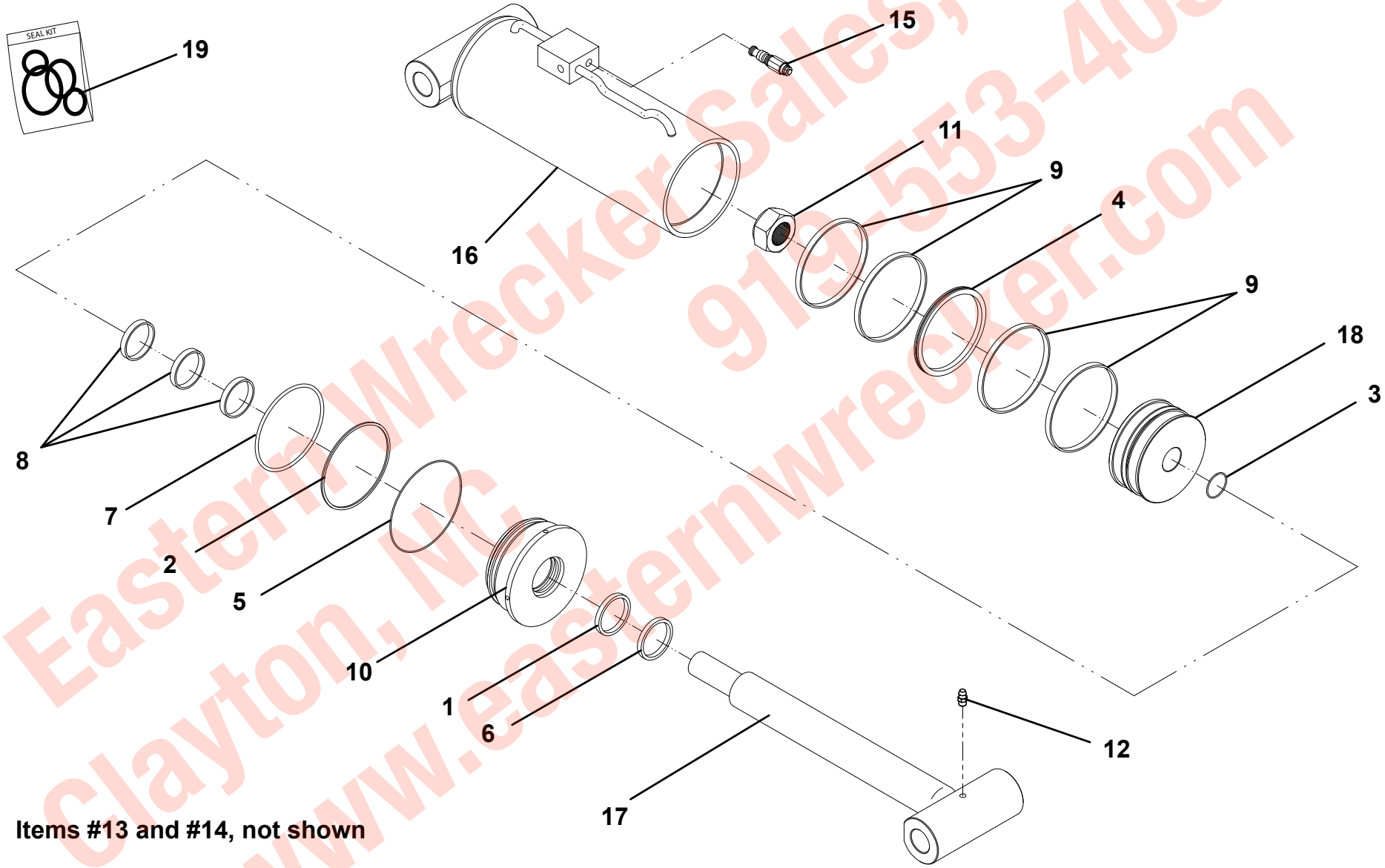


Items #13 and #14, not shown

Eastern Wrecker Sales, Inc.
919-553-4038
Clayton, NC
www.easternwrecker.com

## UNDERLIFT BOOM INSTALLATION - 53,000/56,500 LB

| ITEM | PART NO. | DESCRIPTION | QTY |
|---|---|---|---|
| 1 | 1001133242 | Underlift Knee Boom | 1 |
| 2 | 1001133286 | Bracket, Lift Cylinder Support | 1 |
| 3 | 7320000063 | Underlift Lift Cylinder Assembly | 1 |
| 4 | 3691000231 | Pin | 1 |
| 5 | 7950180161 | Flatwasher, 0.50” ID | 1 |
| 6 | 7950180000 | Lockwasher, 0.59” ID | 1 |
| 7 | 7115181250 | Capscrew, 0.50”-13NC x 1.50” | 1 |
| 8 | 7950220141 | Flatwasher, 0.75” ID | 2 |
| 9 | 7950220000 | Lockwasher, 0.75” ID | 20 |
| 10 | 7115220850 | Capscrew, 0.75”-10NC x 1.00” | 2 |
| 11 | 7440030000 | Grease Fitting | 4 |
| 12 | 7253000002 | Cap, Grease Fitting | 4 |
| 13 | 0682248 | Capscrew, 0.75”-10NC x 6.00” | 1 |
| 14 | 7660222601 | Locknut, 0.75”-10NC | 1 |
| 15 | 7950160141 | Flatwasher, 0.38” ID | 4 |
| 16 | 7115161450 | Capscrew, 0.38”-16NC x 1.75” | 4 |
| 17 | 0682212 | Capscrew, 0.75”-10NC x 1.50” | 10 |
| 18 | 7189000017 | Rubber Bumper | 2 |
| 19 | 4679000127 | Pad, Top | 2 |
| 20 | 4679000245 | Pad, Bottom | 2 |
| 21 | 7115160623 | Capscrew, 0.38”-16NC x 7.00” | 8 |
| 22 | 7115201250 | Capscrew, 0.63”-11NC x 1.50” | 2 |
| 23 | 7660202601 | Locknut, 0.63”-11NC | 2 |
| 24 | 7262000025 | Chain | 2 |
| 25 | 1001151184 | Decal, Wear - LH | 1 |
| 26 | 1001151185 | Decal, Wear - RH | 1 |
| 27 | 1001151049 | Decal, Wear | 1 |
| 28 | 1001133289 | Pin | 1 |
| 29 | 1001128160 | Bushing | 2 |

Eastern Wrecker Sales, Inc.
Clayton, NC 919-553-4038
www.easternwrecker.com

## UNDERLIFT BOOM INSTALLATION - 53,000/56,500 LB

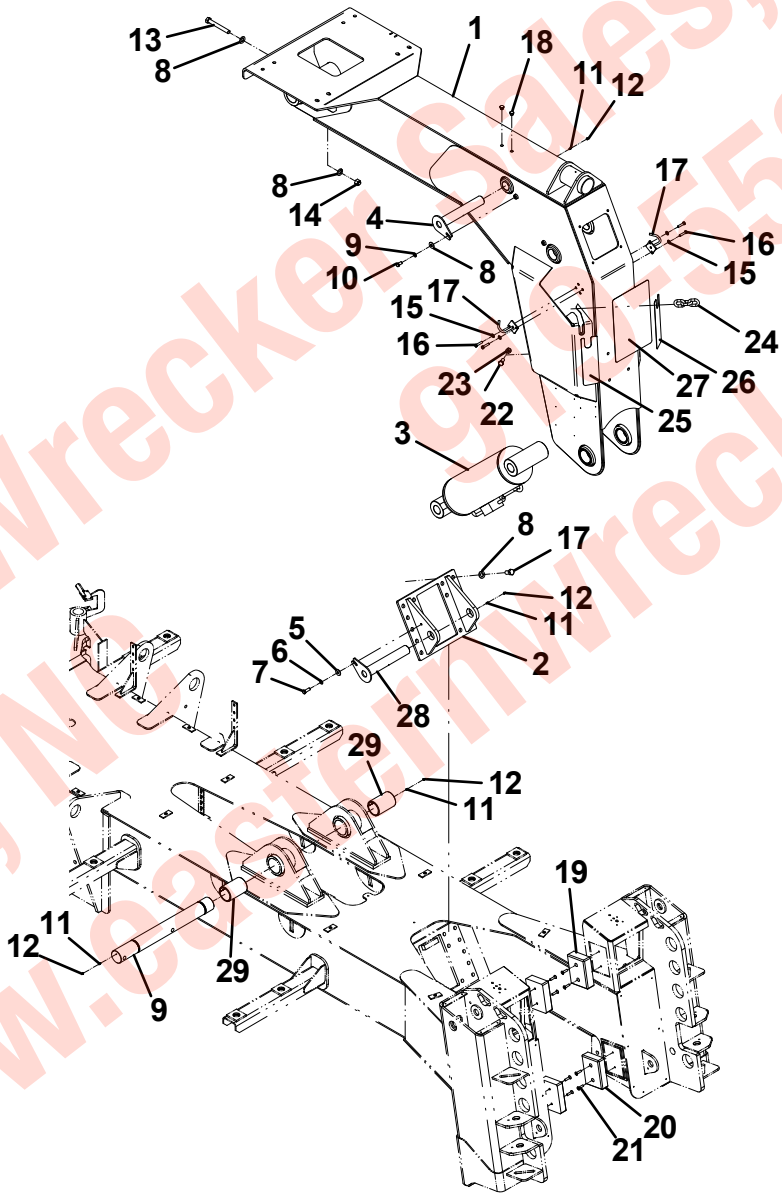


Eastern Wrecker Sales, Inc.
Clayton, NC 919-553-4038
www.easternwrecker.com

## UNDERLIFT LIFT CYLINDER ASSEMBLY - 7320000063

| ITEM | PART NO. | DESCRIPTION | QTY |
|---|---|---|---|
| 1 | 9796250083 | Seal, Wiper | 1 |
| 2 | 9754250011 | Ring, Back-up | 1 |
| 3 | 9796250062 | Seal, “O” Ring | 1 |
| 4 | 70050544 | Seal | 1 |
| 5 | 7796250068 | Seal, “O” Ring | 1 |
| 6 | 70050545 | Seal | 1 |
| 7 | 9754250017 | Ring, Wear | 4 |
| 8 | 80004049 | Ring, Wear | 4 |
| 9 | 70050549 | Head | 1 |
| 10 | 7005314 | Locknut | 1 |
| 11 | 70021757 | Setscrew | 1 |
| 12 | 7005348 | Grease Fitting | 2 |
| 13 | 7005365 | Plug, Port | 1 |
| 14 | 70021648 | Plug, Port | 2 |
| 15 | 70050215 | Valve, Counterbalance | 1 |
| 16 | 70050232 | Bushing | 4 |
| 17 | 70050546 | Assembly, Tube | 1 |
| 18 | 70050547 | Assembly, Rod | 1 |
| 19 | 9254250007 | Headcap | 1 |
| 20 | 70050548 | Piston | 1 |
| 21 | 7577000063 | Kit, Seal | 1 |

Eastern Wrecker Sales, Inc.
Clayton, NC 919-553-4038
www.easternwrecker.com

## UNDERLIFT LIFT CYLINDER ASSEMBLY - 7320000063

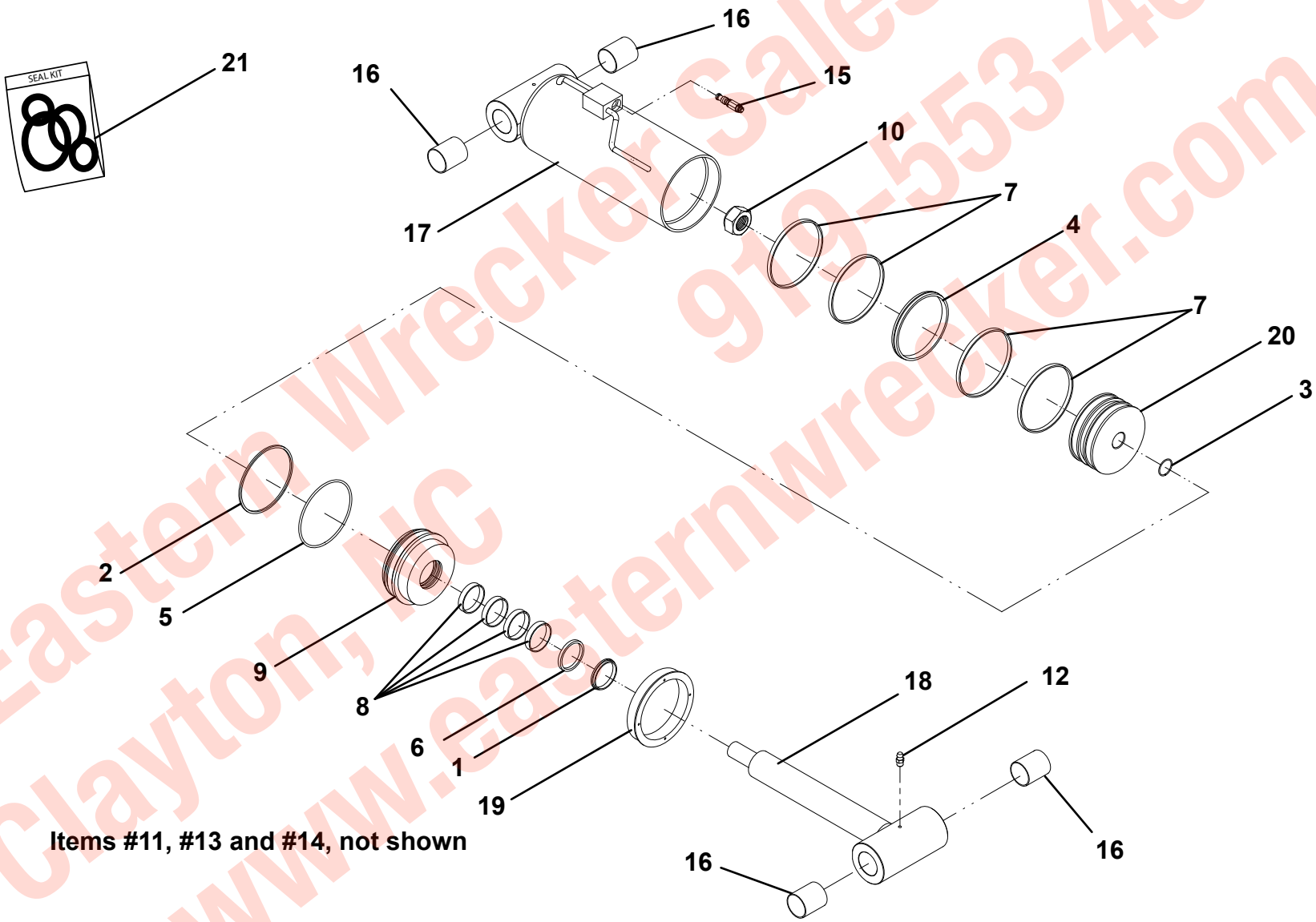


Items #11, #13 and #14, not shown

Eastern Wrecker Sales, Inc.
Clayton, NC
919-553-4038
www.easternwrecker.com

## UNDERLIFT INSTALLATION - 30,000/35,000 LB

| ITEM | PART NO. | DESCRIPTION | QTY |
|---|---|---|---|
| 1 | 3170000433 | Underlift Boom Assembly - 30,000 LB | 1 |
| | 3170000220 | Underlift Boom Assembly - 35,000 LB | |
| 2 | 7320000039 | Underlift Tilt Cylinder Assembly | 1 |
| 3 | 3691000160 | Pin | 1 |
| 4 | 4691000317 | Pin | 1 |
| 5 | 4691000311 | Pin | 1 |
| 6 | 7754000051 | Retaining Ring | 2 |
| 7 | 7754000018 | Retaining Ring | 2 |
| 8 | 7950180161 | Flatwasher, 0.50” ID | 1 |
| 9 | 7950180000 | Lockwasher, 0.50” ID | 1 |
| 10 | 7115180850 | Capscrew, 0.50”-13NC x 1.00” | 1 |
| 11 | 7440030000 | Grease Fitting | 2 |
| 12 | 7253000002 | Cap, Grease Fitting | 2 |
| 13 | 7209000029 | Bushing | 2 |

Eastern Wrecker Sales, Inc.
919-553-4038
Clayton, NC
www.easternwrecker.com

## UNDERLIFT INSTALLATION - 30,000/35,000 LB

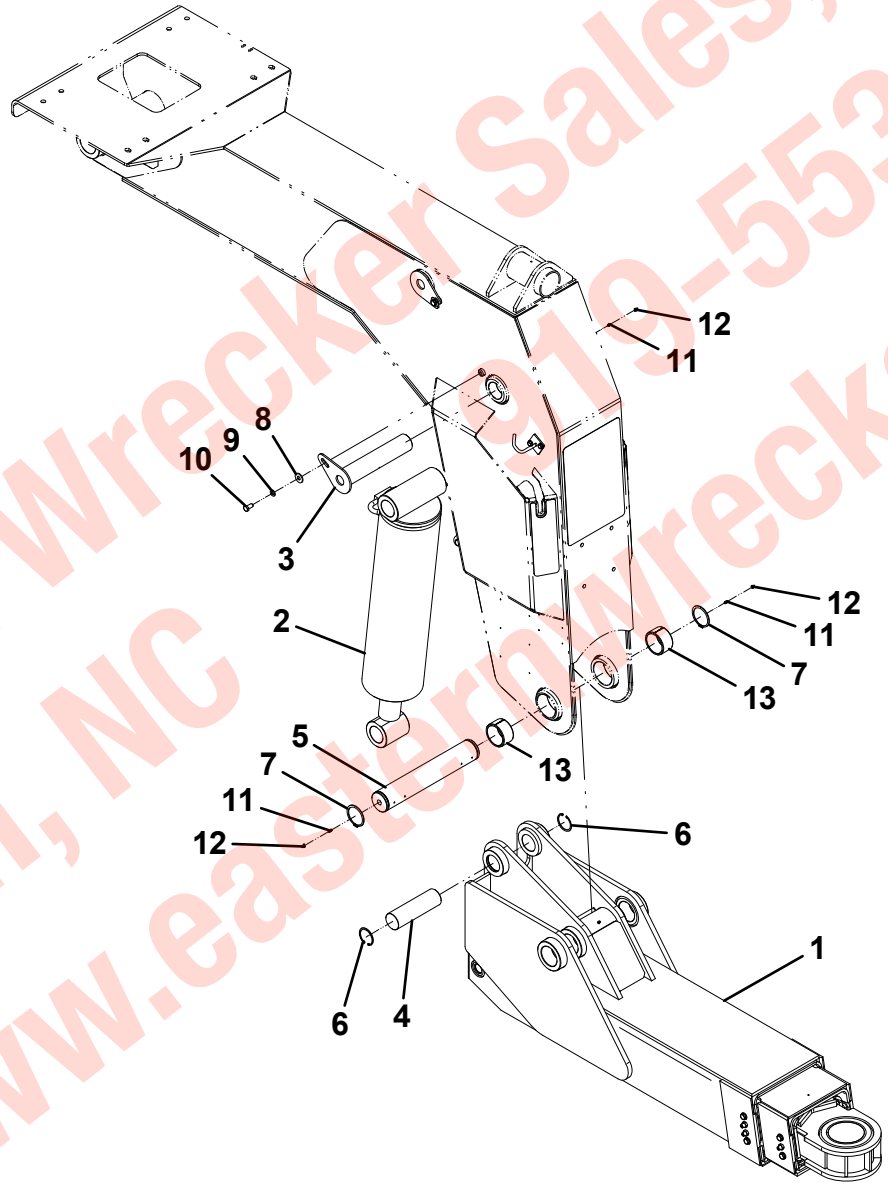


Eastern Wrecker Sales, Inc.
Clayton, NC 919-553-4038
www.easternwrecker.com

## UNDERLIFT TILT CYLINDER ASSEMBLY - 7320000039

| ITEM | PART NO. | DESCRIPTION | QTY |
|---|---|---|---|
| 1 | 83304143 | Seal, Wiper | 1 |
| 2 | 9796250071 | Seal | 1 |
| 3 | 9754250043 | Ring, Back-up | 1 |
| 4 | 9796250062 | Seal, “O” Ring | 1 |
| 5 | 9796250113 | Seal | 1 |
| 6 | 9796250124 | Seal, “O” Ring | 1 |
| 7 | 9796250117 | Seal, “O” Ring | 1 |
| 8 | 83304140 | Ring, Wear | 3 |
| 9 | 9754250045 | Ring, Wear | 2 |
| 10 | 7019892 | Head | 1 |
| 11 | 7005314 | Locknut | 1 |
| 12 | 7005348 | Grease Fitting | 1 |
| 13 | 7005365 | Plug, Port | 3 |
| 14 | 70021648 | Plug, Port | 2 |
| 15 | 70050216 | Valve, Counterbalance | 1 |
| 16 | 70050542 | Assembly, Tube | 1 |
| 17 | 70050543 | Assembly, Rod | 1 |
| 18 | 9698250014 | Piston | 1 |
| 19 | 7577250204 | Kit, Seal | 1 |

Eastern Wrecker Sales, Inc.
Clayton, NC
919-553-4038
www.easternwrecker.com

## UNDERLIFT TILT CYLINDER ASSEMBLY - 7320000039

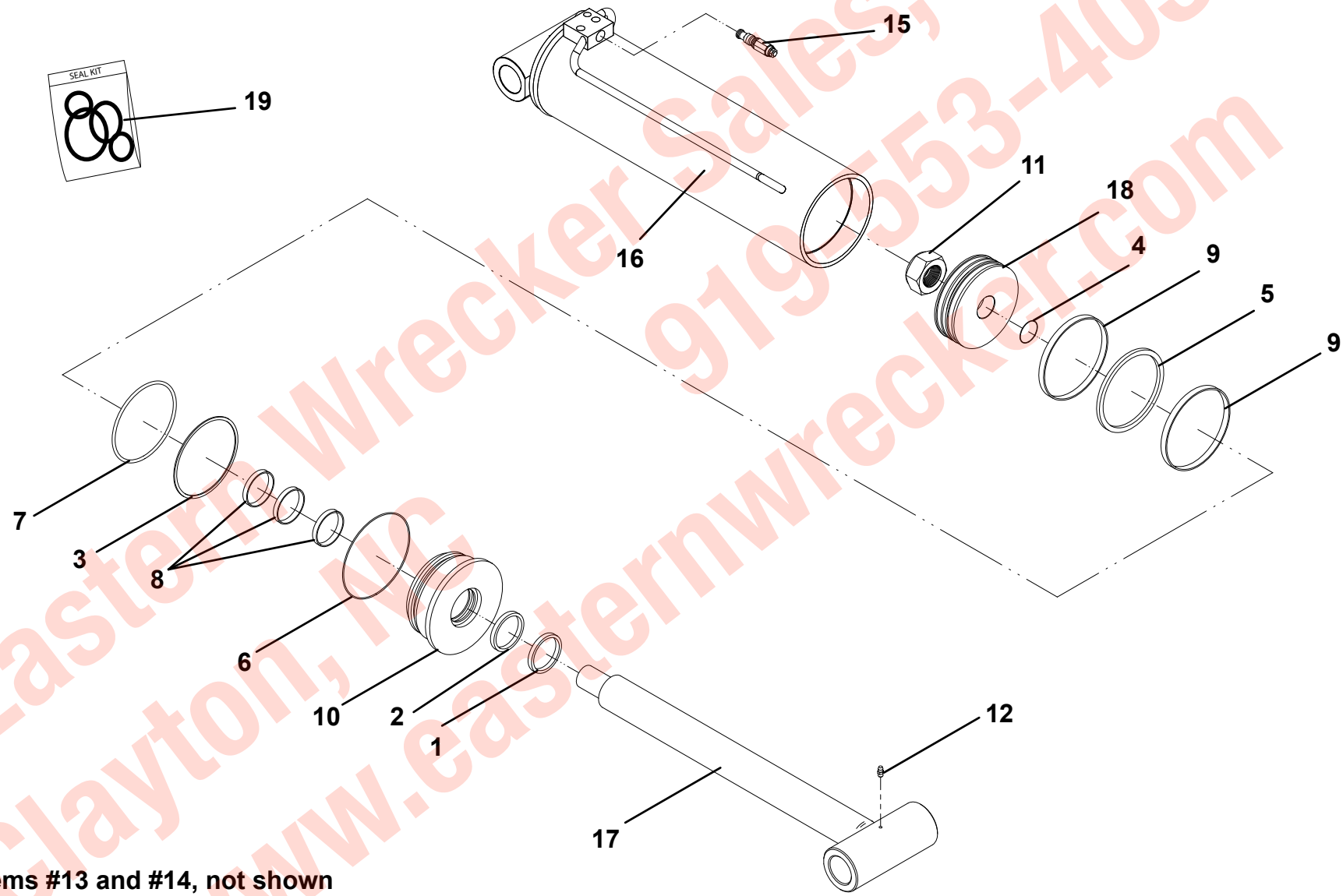


Items #13 and #14, not shown

Eastern Wrecker Sales, Inc.
Clayton, NC
919-553-4038
www.easternwrecker.com

## UNDERLIFT ASSEMBLY - 3170000433 - 30,000 LB

| ITEM | PART NO. | DESCRIPTION | QTY |
|---|---|---|---|
| 1 | 3170000432 | Base Section Boom Weldment | 1 |
| 2 | 3170000431 | Mid Section Boom Weldment | 1 |
| 3 | 3170000430 | Fly Section Boom Weldment | 1 |
| 4 | 7320000076 | Underlift Extension Cylinder Assembly | 1 |
| 5 | 4691000318 | Pin | 1 |
| 6 | 4691000316 | Pin | 1 |
| 7 | 7754000043 | Retaining Ring | 4 |
| 8 | 7661000019 | U-Nut, 0.25”-20NC | 4 |
| 9 | 4679000159 | Pad | 2 |
| 10 | 4706003708 | Plate | 2 |
| 11 | 4679000161 | Pad | 4 |
| 12 | 4679000158 | Pad | 4 |
| 13 | 3706000177 | Plate | 1 |
| 14 | 3706000178 | Plate | 1 |
| 15 | 4679000206 | Pad | 2 |
| 16 | 4706003144 | Plate | 2 |
| 17 | 7114140418 | Capscrew, 0.25”-20NC x 0.50” | 8 |
| 18 | 3706000179 | Plate - LH | 1 |
| 19 | 3706000180 | Plate - RH | 1 |
| 20 | 4679000205 | Pad | 2 |
| 21 | 4706003719 | Plate | 2 |
| 22 | 7105180850 | Capscrew, 0.50”-20NF x 1.00” | 8 |
| 23 | 7950180153 | Flatwasher, 0.50” ID | 8 |
| 24 | 4706002467 | Plate | 1 |
| 25 | 7115140650 | Capscrew, 0.25”-20NC x 0.75” | 4 |
| 26 | 7950140000 | Lockwasher, 0.25” ID | 4 |
| 27 | 7440030000 | Grease Fitting | 1 |
| 28 | 7786000008 | Screw, 0.50”-20NF x 1.25” | 6 |
| 29 | 7660180230 | Nut, 0.50”-20NF | 6 |
| 30 | 4706003709 | Plate | 4 |
| 31 | 4706003721 | Plate | 4 |
| 32 | 4706003722 | Plate | 4 |
| 33 | 4706003723 | Plate | 4 |
| 34 | 4706003724 | Plate | 4 |
| 35 | 4706003725 | Plate | 2 |
| 36 | 4706003720 | Plate | 2 |

Eastern Wrecker Sales, Inc.
919-553-4038
Clayton, NC
www.easternwrecker.com

## UNDERLIFT ASSEMBLY - 3170000433 - 30,000 LB

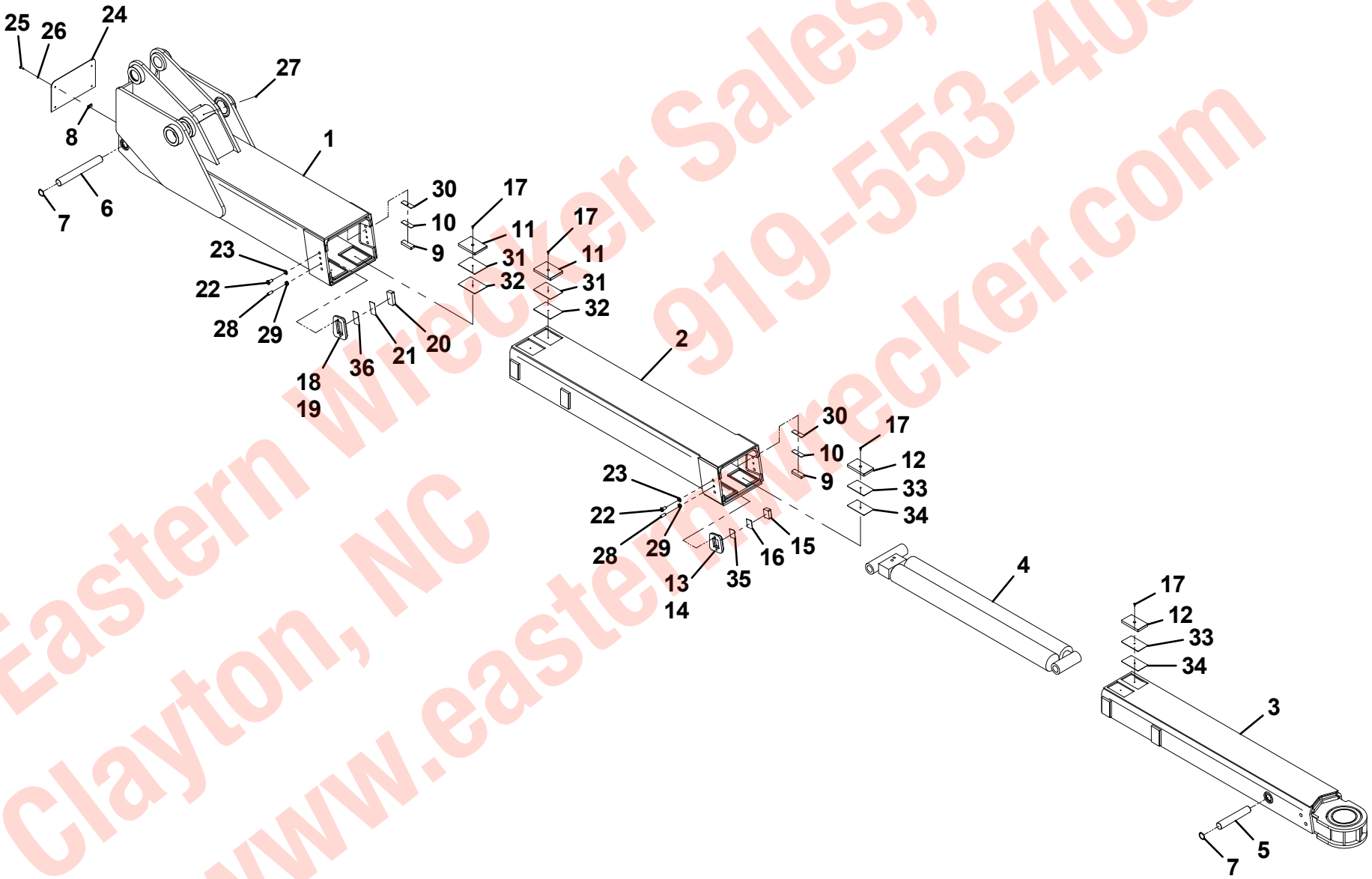


Eastern Wrecker Sales, Inc.
Clayton, NC 919-553-4038
www.easternwrecker.com

## UNDERLIFT EXTENSION CYLINDER ASSEMBLY - 7320000076

| ITEM | PART NO. | DESCRIPTION | QTY |
|---|---|---|---|
| 1 | 9796250080 | Seal, Wiper | 2 |
| 2 | 7019828 | Seal | 2 |
| 3 | 9796250133 | Seal, “O” Ring | 1 |
| 4 | 7019846 | Seal, “O” Ring | 2 |
| 5 | 7019845 | Ring, Back-up | 2 |
| 6 | 9796250135 | Seal, “O” Ring | 1 |
| 7 | 7019844 | Seal, “O” Ring | 2 |
| 8 | 9796250137 | Seal, “O” Ring | 2 |
| 9 | 9796250138 | Seal | 2 |
| 10 | 9754250015 | Ring, Wear | 4 |
| 11 | 9754250049 | Ring, Wear | 4 |
| 12 | 7577250271 | Kit, Seal | 1 |
| 13 | 7003212 | Locknut | 1 |
| 14 | 7003281 | Setscrew | 4 |
| 15 | 7005348 | Grease Fitting | 1 |
| 16 | 7005365 | Plug, Port | 5 |
| 17 | 70021648 | Plug, Port | 2 |
| 18 | 7440030400 | Grease Fitting | 1 |
| 19 | 70050218 | Valve, Cartridge | 1 |
| 20 | 70050217 | Valve, Counterbalance | 1 |
| 21 | 70050553 | Assembly, Tube | 1 |
| 22 | 70050554 | Assembly, Rod | 1 |
| 23 | 70050555 | Assembly, Rod-Tube | 1 |
| 24 | 9553250015 | Head | 1 |
| 25 | 9254250009 | Head | 1 |
| 26 | 9698250018 | Piston | 1 |
| 27 | 9698250019 | Piston | 1 |
| 28 | 9007250005 | Adapter, RT Tube | 1 |

Eastern Wrecker Sales, Inc.
Clayton, NC 919-553-4038
www.easternwrecker.com

## UNDERLIFT EXTENSION CYLINDER ASSEMBLY - 7320000076

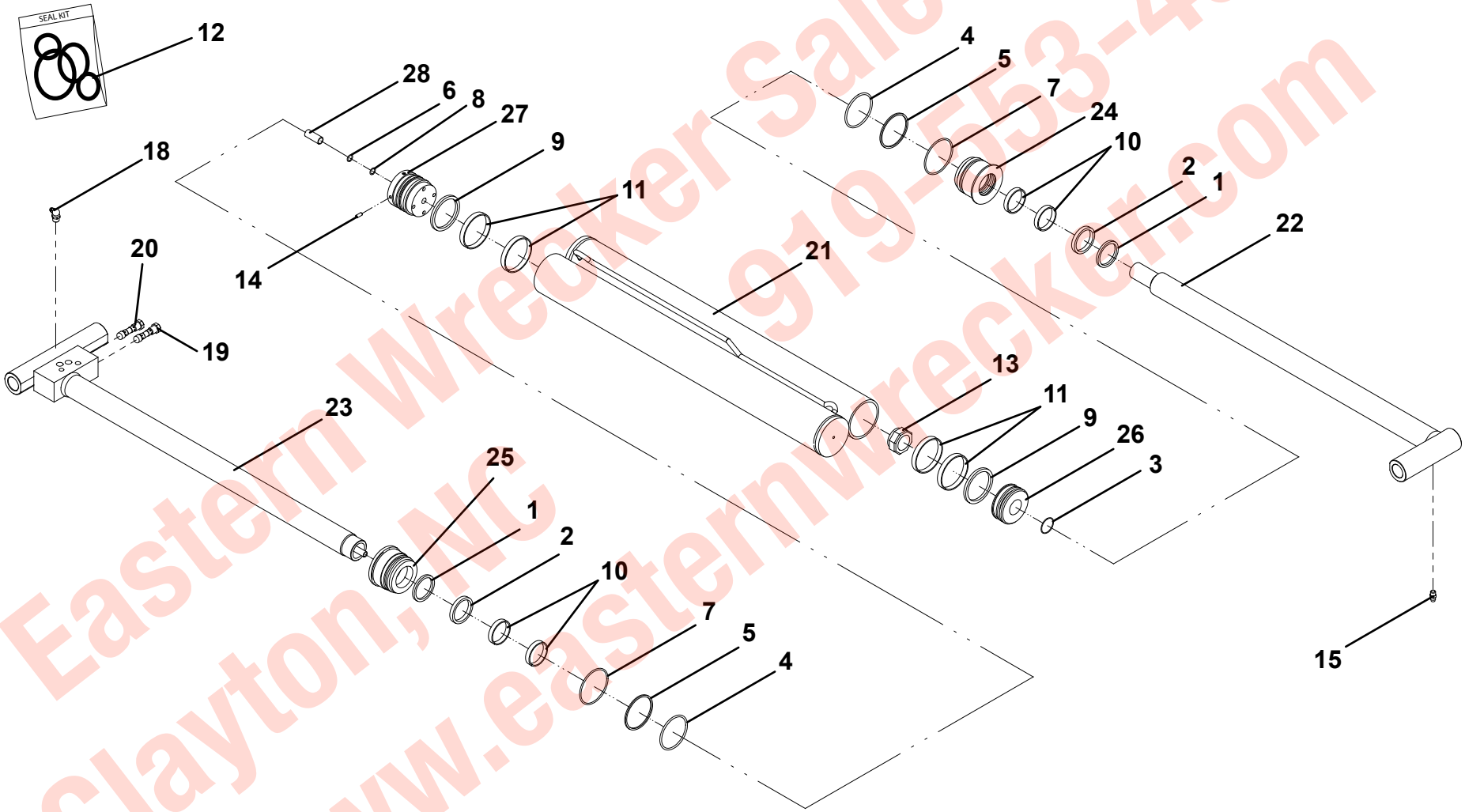


Items #16 and #17, not shown

Eastern Wrecker Sales, Inc.
Clayton, NC
919-553-4038
www.easternwrecker.com

## UNDERLIFT ASSEMBLY - 3170000220 - 35,000 LB

| ITEM | PART NO. | DESCRIPTION | QTY |
|---|---|---|---|
| 1 | 3170000224 | Base Section Boom Weldment | 1 |
| 2 | 3170000223 | Mid Section Boom Weldment | 1 |
| 3 | 3170000221 | Fly Section Boom Weldment | 1 |
| 4 | 7320000042 | Underlift Extension Cylinder Assembly | 1 |
| 5 | 4691000318 | Pin | 1 |
| 6 | 4691000316 | Pin | 1 |
| 7 | 7754000043 | Retaining Ring | 4 |
| 8 | 4679000159 | Pad | 2 |
| 9 | 4706003708 | Plate | 2 |
| 10 | 4679000161 | Pad | 4 |
| 11 | 4679000158 | Pad | 4 |
| 12 | 3706000177 | Plate | 1 |
| 13 | 3706000178 | Plate | 1 |
| 14 | 4679000206 | Pad | 2 |
| 15 | 4706003144 | Plate | 2 |
| 16 | 7114140418 | Capscrew, 0.25”-20NC x 0.50” | 8 |
| 17 | 3706000179 | Plate - LH | 1 |
| 18 | 3706000180 | Plate - RH | 1 |
| 19 | 4679000205 | Pad | 2 |
| 20 | 4706003719 | Plate | 2 |
| 21 | 7105180850 | Capscrew, 0.50”-20NF x 1.00” | 8 |
| 22 | 7950170153 | Flatwasher, 0.50” ID | 8 |
| 23 | 4706002467 | Plate | 1 |
| 24 | 7115140650 | Capscrew, 0.25”-20NC x 0.75” | 4 |
| 25 | 7950140000 | Lockwasher, 0.25” ID | 4 |
| 26 | 7440030000 | Grease Fitting | 1 |
| 27 | 7786000008 | Screw, 0.50”-20NF x 1.25” | 6 |
| 28 | 7660180230 | Nut, 0.50”-20NF | 6 |
| 29 | 4706003709 | Plate | 4 |
| 30 | 4706003721 | Plate | 4 |
| 31 | 4706003722 | Plate | 4 |
| 32 | 4706003723 | Plate | 4 |
| 33 | 4706003724 | Plate | 4 |
| 34 | 4706003725 | Plate | 2 |
| 35 | 4706003720 | Plate | 2 |
| 36 | 7661000019 | U-Nut, 0.25”-20NC | 4 |

Eastern Wrecker Sales, Inc.
919-553-4038
Clayton, NC
www.easternwrecker.com

## UNDERLIFT ASSEMBLY - 3170000220 - 35,000 LB

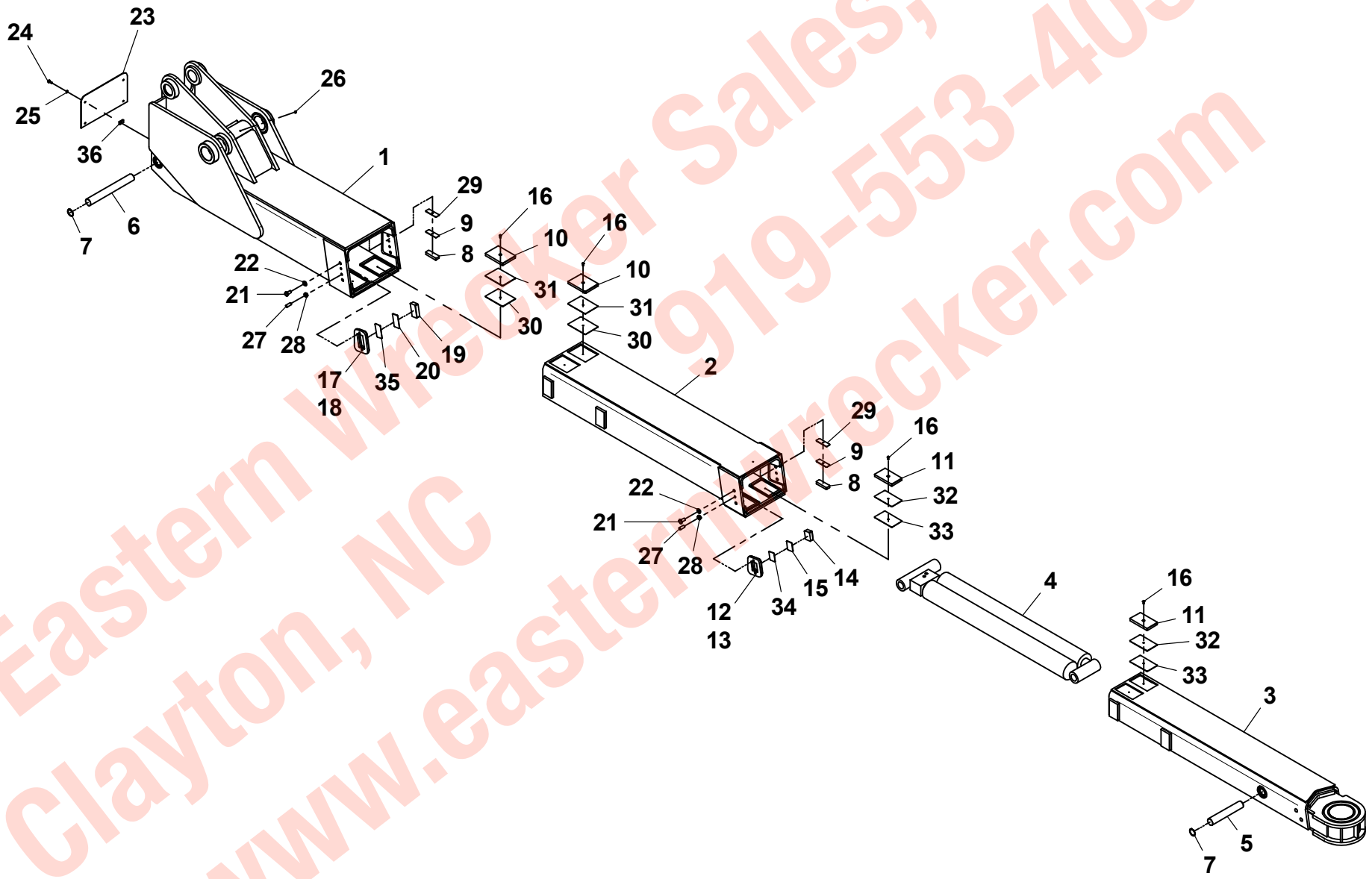


Eastern Wrecker Sales, Inc.
Clayton, NC 919-553-4038
www.easternwrecker.com

## UNDERLIFT EXTENSION CYLINDER ASSEMBLY - 7320000042

| ITEM | PART NO. | DESCRIPTION | QTY |
|---|---|---|---|
| 1 | 9796250080 | Seal, Wiper | 2 |
| 2 | 7019828 | Seal | 2 |
| 3 | 9796250133 | Seal, “O” Ring | 1 |
| 4 | 7019846 | Seal, “O” Ring | 2 |
| 5 | 7019845 | Ring, Back-up | 2 |
| 6 | 9796250135 | Seal, “O” Ring | 2 |
| 7 | 7019844 | Seal, “O” Ring | 2 |
| 8 | 9796250137 | Seal, “O” Ring | 2 |
| 9 | 9796250138 | Seal | 2 |
| 10 | 9754250015 | Ring, Wear | 4 |
| 11 | 9754250049 | Ring, Wear | 4 |
| 12 | 7577250271 | Kit, Seal | 1 |
| 13 | 7003212 | Locknut | 1 |
| 14 | 7003281 | Setscrew | 4 |
| 15 | 7005348 | Grease Fitting | 1 |
| 16 | 70050365 | Plug, Port | 2 |
| 17 | 70021648 | Plug, Port | 2 |
| 18 | 7440030400 | Grease Fitting | 1 |
| 19 | 9935250025 | Kit, Check Cartridge | 1 |
| 20 | 9912250021 | Assembly, Tube | 1 |
| 21 | 9763250025 | Assembly, Rod | 1 |
| 22 | 9763250026 | Assembly, Rod-Tube | 1 |
| 23 | 9553250015 | Head | 1 |
| 24 | 9553250016 | Head | 1 |
| 25 | 9698250018 | Piston | 1 |
| 26 | 9698250019 | Piston | 1 |
| 27 | 9007250005 | Adapter, RT Tube | 1 |

Eastern Wrecker Sales, Inc.
Clayton, NC
919-553-4038
www.easternwrecker.com

## UNDERLIFT EXTENSION CYLINDER ASSEMBLY - 7320000042

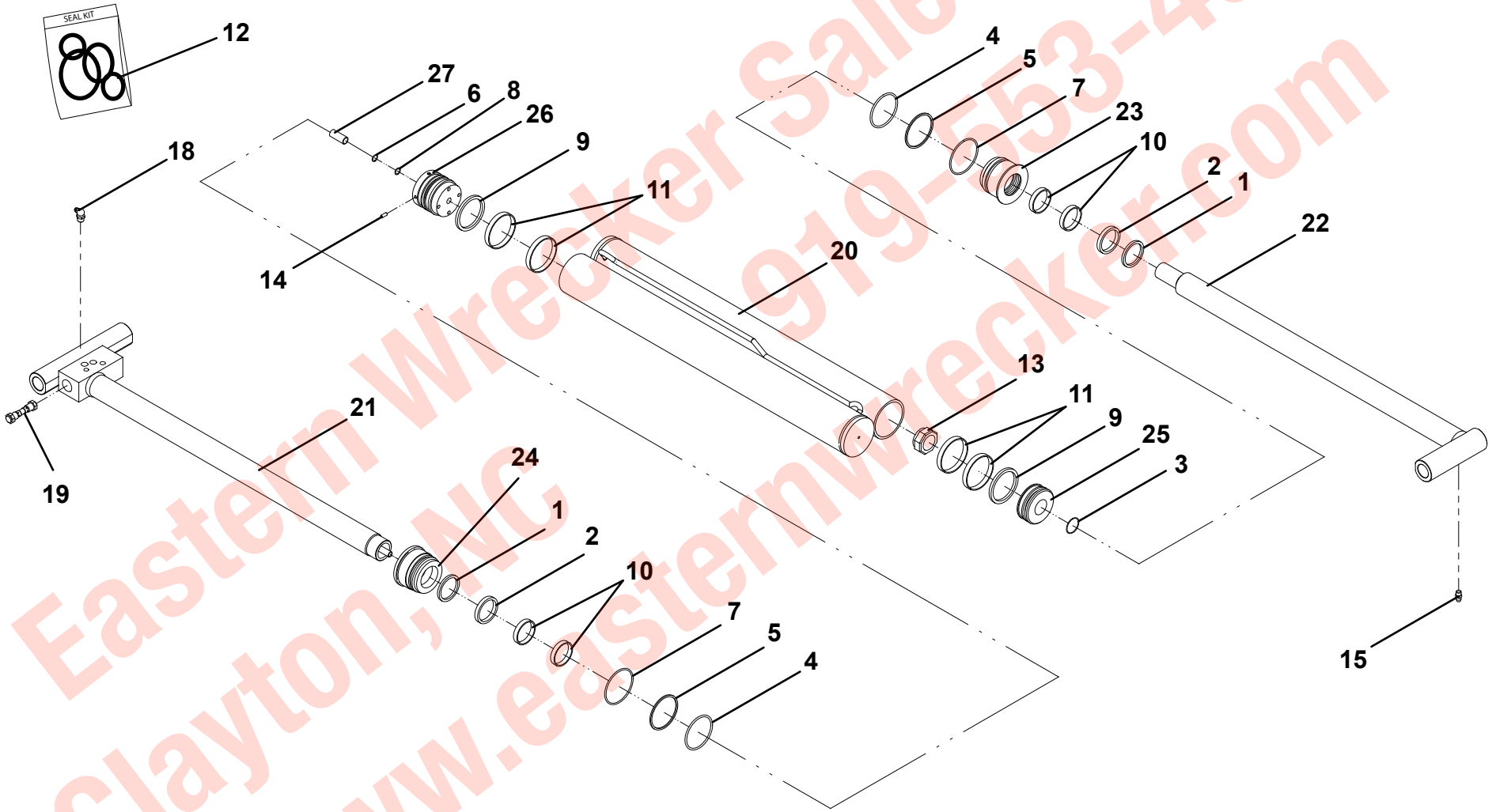


Items #16 and #17, not shown

Eastern Wrecker Sales, Inc.
Clayton, NC 919-553-4038
www.easternwrecker.com

## UNDERLIFT INSTALLATION - 53,000/56,500 LB

| ITEM | PART NO. | DESCRIPTION | QTY |
|---|---|---|---|
| 1 | 3507100001 | Underlift Boom Assembly - 53,000 LB | 1 |
| | 3170000407 | Underlift Boom Assembly - 56,500 LB | |
| 2 | 7320000096 | Underlift Tilt Cylinder Assembly | 1 |
| 3 | 3691000232 | Pin | 1 |
| 4 | 4691000290 | Pin | 1 |
| 5 | 4691000291 | Pin | 1 |
| 6 | 7754000051 | Retaining Ring | 2 |
| 7 | 7754000018 | Retaining Ring | 2 |
| 8 | 7950220141 | Flatwasher, 0.75” ID | 1 |
| 9 | 7950000000 | Lockwasher, 0.75” ID | 1 |
| 10 | 7115220850 | Capscrew, 0.75”-10NC x 1.00” | 1 |
| 11 | 7440030000 | Grease Fitting | 2 |
| 12 | 7253000002 | Cap, Grease Fitting | 2 |
| 13 | 7209000029 | Bushing | 2 |

Eastern Wrecker Sales, Inc.
Clayton, NC
919-553-4038
www.easternwrecker.com

## UNDERLIFT INSTALLATION - 53,000/56,500 LB

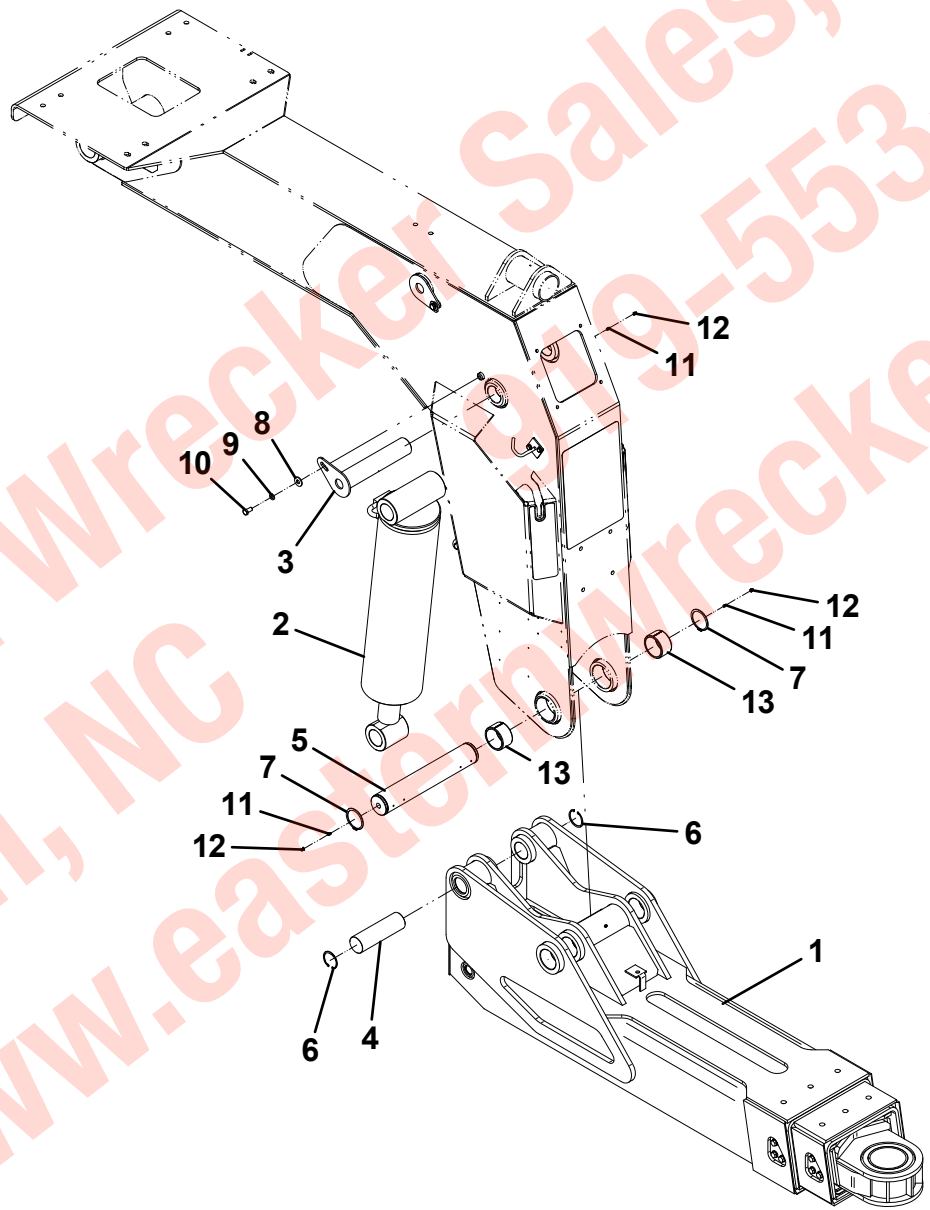


Eastern Wrecker Sales, Inc.
Clayton, NC 919-553-4038
www.easternwrecker.com

## UNDERLIFT TILT CYLINDER ASSEMBLY - 7320000096

| ITEM | PART NO. | DESCRIPTION | QTY |
|---|---|---|---|
| 1 | 9796250083 | Seal, Wiper | 1 |
| 2 | 9754250011 | Ring, Back-up | 1 |
| 3 | 9796250062 | Seal, “O” Ring | 1 |
| 4 | 70050544 | Seal | 1 |
| 5 | 9796250068 | Seal, “O” Ring | 1 |
| 6 | 70050545 | Seal | 1 |
| 7 | 9754250017 | Ring, Wear | 4 |
| 8 | 80004049 | Ring, Wear | 4 |
| 9 | 7577000063 | Kit, Seal | 1 |
| 10 | 7005314 | Locknut | 1 |
| 11 | 70021757 | Setscrew | 1 |
| 12 | 7005348 | Grease Fitting | 2 |
| 13 | 70021648 | Plug, Port | 2 |
| 14 | 7005365 | Plug, Port | 1 |
| 15 | 70050215 | Valve, Counterbalance | 1 |
| 16 | 70050594 | Assembly, Tube | 1 |
| 17 | 70050595 | Assembly, Rod | 1 |
| 18 | 9254250007 | Headcap | 1 |
| 19 | 70050548 | Piston | 1 |
| 20 | 70050549 | Head | 1 |

Eastern Wrecker Sales, Inc.
Clayton, NC
919-553-4038
www.easternwrecker.com

## UNDERLIFT TILT CYLINDER ASSEMBLY - 7320000096

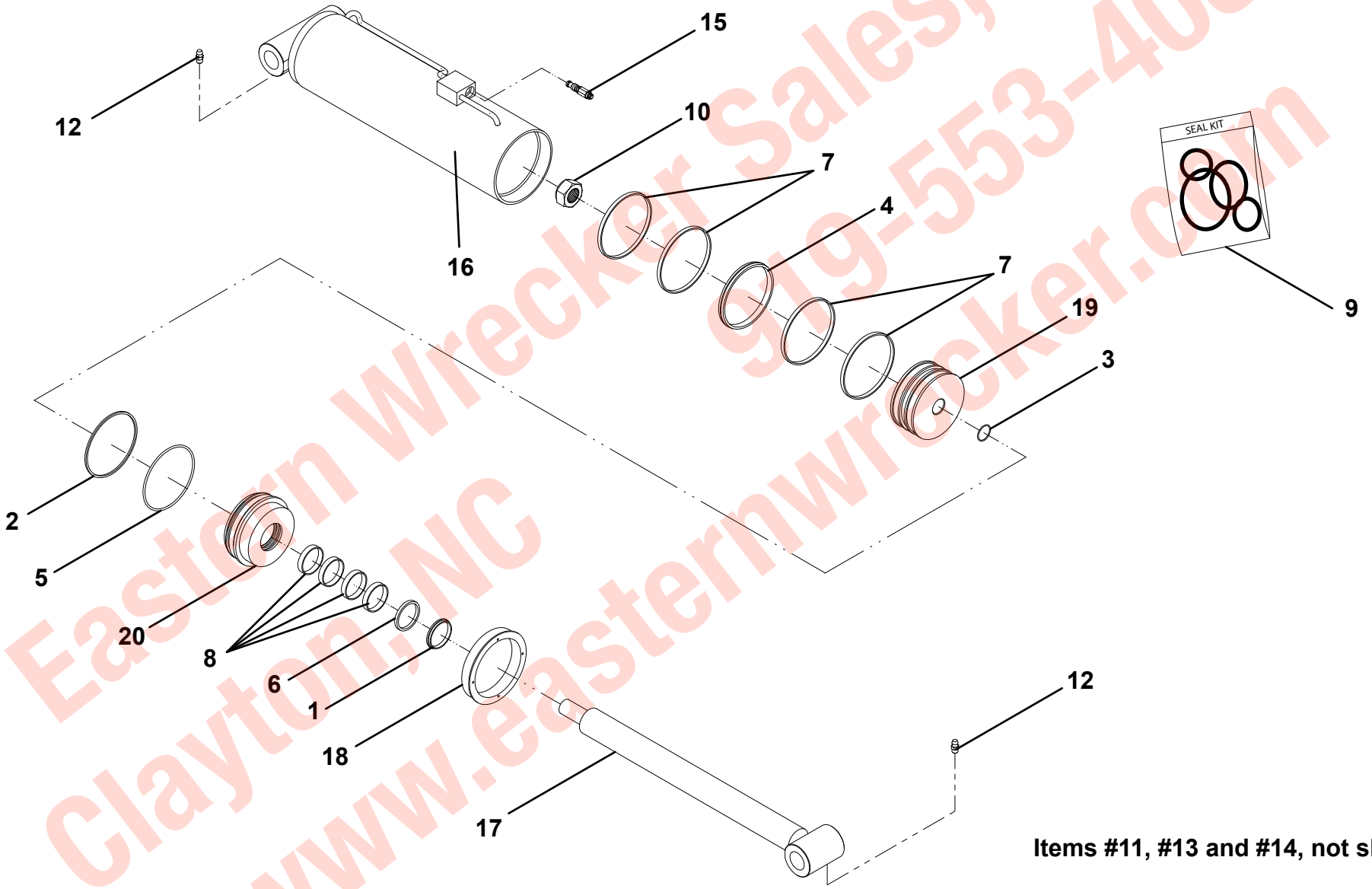


Items #11, #13 and #14, not shown

Eastern Wrecker Sales, Inc.
Clayton, NC
919-553-4038
www.easternwrecker.com

## UNDERLIFT ASSEMBLY - 3507100001 - 53,000 LB

| ITEM | PART NO. | DESCRIPTION | QTY |
|---|---|---|---|
| 1 | 3170000125 | Base Section Boom Weldment | 1 |
| 2 | 3170000124 | Mid Section Boom Weldment | 1 |
| 3 | 3170000123 | Fly Section Boom Weldment | 1 |
| 4 | 7320000026 | Underlift Extension Cylinder Assembly | 1 |
| 5 | 4691000292 | Pin | 1 |
| 6 | 4691000293 | Pin | 1 |
| 7 | 7754000043 | Retaining Ring | 4 |
| 8 | 4679000146 | Pad | 8 |
| 9 | 4679000147 | Pad | 2 |
| 10 | 7114140518 | Capscrew, 0.25”-20NC x 0.63” | 10 |
| 11 | 4706002209 | Plate | 1 |
| 12 | 7108181050 | Capscrew, 0.50”-20NF x 1.25” | 6 |
| 13 | 4706002208 | Plate | 1 |
| 14 | 7108180850 | Capscrew, 0.50”-20NF x 1.00” | 6 |
| 15 | 7950180153 | Flatwasher, 0.50” ID | 12 |
| 16 | 7440030000 | Grease Fitting | 1 |
| 17 | 4706002207 | Plate | 1 |
| 18 | 7115140650 | Plate | 4 |
| 19 | 7950140000 | Lockwasher, 0.25” ID | 4 |
| 20 | 4706002211 | Plate | 1 |
| 21 | 4706002210 | Plate | 1 |
| 22 | 4812000057 | Shim, 14GA | 2 |
| 23 | 4706003708 | Plate | 2 |
| 24 | 4706003709 | Plate | 2 |
| 25 | 4706003710 | Plate | 4 |
| 26 | 4706003717 | Plate | 8 |
| 27 | 4706003718 | Plate | 8 |

Eastern Wrecker Sales, Inc.
Clayton, NC
919-553-4038
www.easternwrecker.com

## UNDERLIFT ASSEMBLY - 3507100001 - 53,000 LB

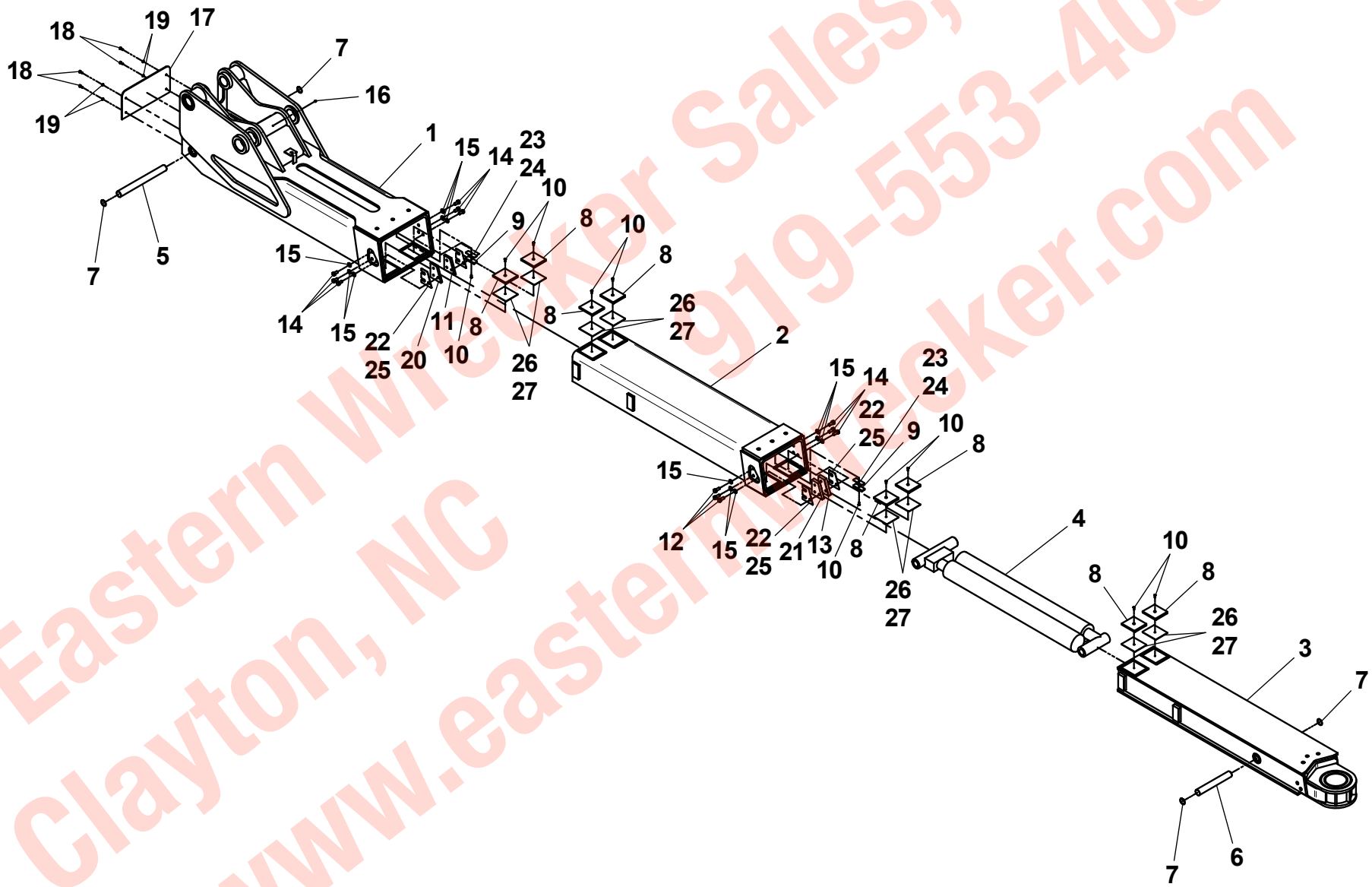


Eastern Wrecker Sales, Inc.
Clayton, NC 919-553-4038
www.easternwrecker.com

## UNDERLIFT EXTENSION CYLINDER ASSEMBLY - 7320000026

| ITEM | PART NO. | DESCRIPTION | QTY |
|---|---|---|---|
| 1 | 9796250081 | Seal, Wiper | 2 |
| 2 | 7019829 | Seal | 2 |
| 3 | 7023518 | Seal, “O” Ring | 1 |
| 4 | 9754250009 | Ring, Back-up | 2 |
| 5 | 9796250057 | Seal, “O” Ring | 2 |
| 6 | 9796250058 | Seal, “O” Ring | 2 |
| 7 | 70050534 | Seal, “O” Ring | 2 |
| 8 | 9796250073 | Seal | 2 |
| 9 | 9754250014 | Ring, Wear | 3 |
| 10 | 70050568 | Ring, Wear | 4 |
| 11 | 7577250334 | Kit, Seal | 1 |
| 12 | 7003116 | Locknut | 1 |
| 13 | 70050535 | Setscrew | 4 |
| 14 | 7005348 | Grease Fitting | 2 |
| 15 | 7005365 | Plug, Port | 2 |
| 16 | 70021648 | Plug, Port | 2 |
| 17 | 9935250025 | Kit, Check Cartridge | 1 |
| 18 | 70050536 | Assembly, Tube | 1 |
| 19 | 70050537 | Assembly, Rod | 1 |
| 20 | 70050538 | Assembly, Rod-Tube | 1 |
| 21 | 9553250010 | Head | 1 |
| 22 | 7024101 | Piston | 1 |
| 23 | 70050540 | Piston | 1 |
| 24 | 70050541 | Head | 1 |

Eastern Wrecker Sales, Inc.
Clayton, NC
919-553-4038
www.easternwrecker.com

## UNDERLIFT EXTENSION CYLINDER ASSEMBLY - 7320000026

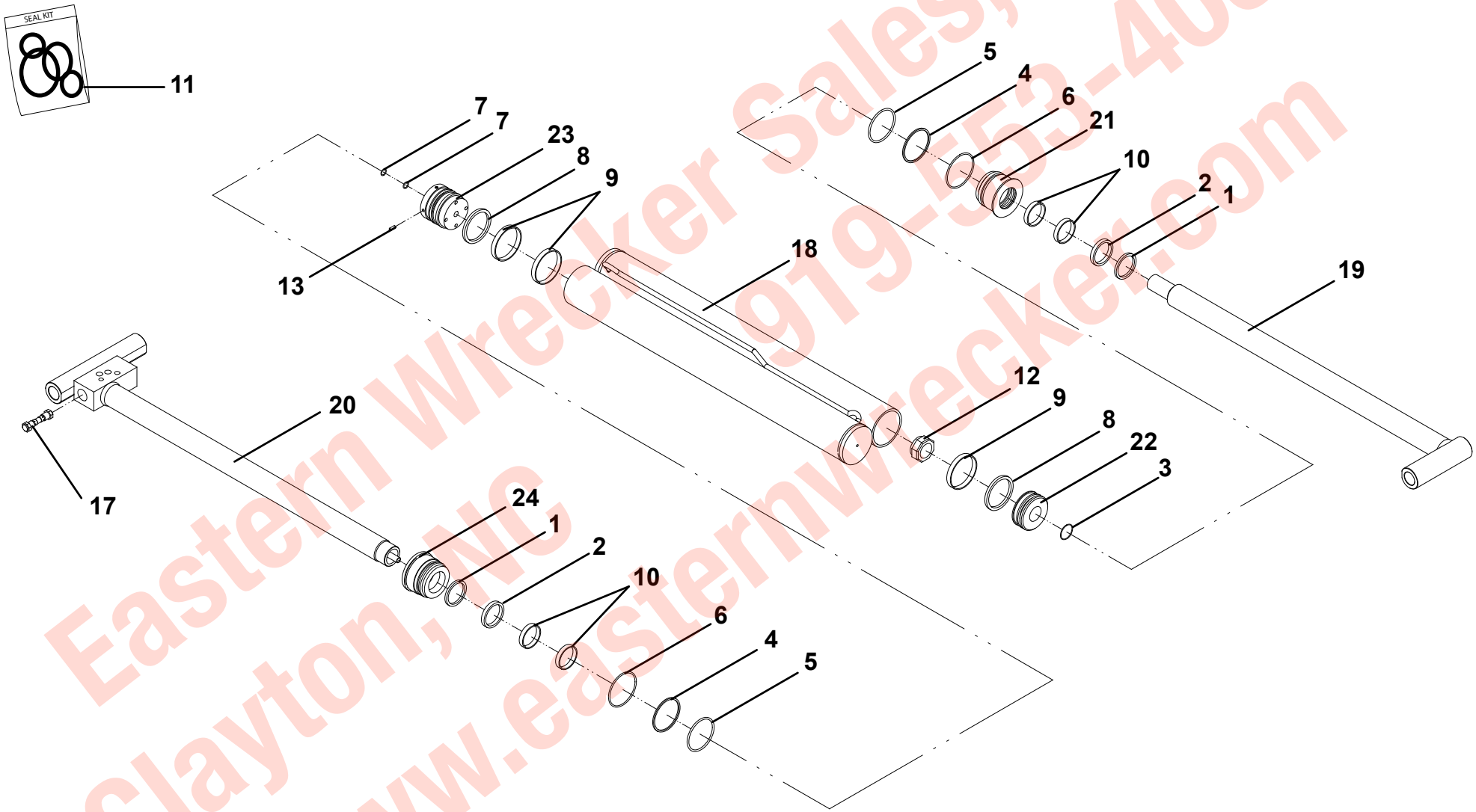


**Items #14, #15 and #16, not shown**

Eastern Wrecker Sales, Inc.
Clayton, NC
919-553-4038
www.easternwrecker.com

## UNDERLIFT ASSEMBLY - 3170000407 - 56,500 LB

| ITEM | PART NO. | DESCRIPTION | QTY |
|---|---|---|---|
| 1 | 3170000400 | Base Section Boom Weldment | 1 |
| 2 | 3170000401 | Mid Section Boom Weldment | 1 |
| 3 | 3170000406 | Fly Section Boom Weldment | 1 |
| 4 | 7320000068 | Underlift Extension Cylinder Assembly | 1 |
| 5 | 4691000293 | Pin | 1 |
| 6 | 4691000321 | Pin | 1 |
| 7 | 7754000043 | Retaining Ring | 4 |
| 8 | 4706005262 | Plate | 2 |
| 9 | 4706005263 | Plate | 2 |
| 10 | 7108180850 | Capscrew, 0.50”-20NF x 1.00” | 12 |
| 11 | 7950180000 | Lockwasher, 0.50” ID | 12 |
| 12 | 4679000277 | Pad, 0.38” Thk | 8 |
| | 4679000293 | Pad, 0.25” Thk | |
| 13 | 7114140518 | Capscrew, 0.25”-20NC x 0.63” | 8 |
| 14 | 4706005281 | Plate | 1 |
| 15 | 7661000019 | U-Nut, 0.25”-20NC | 4 |
| 16 | 7115140650 | Capscrew, 0.25”-20NC x 0.75” | 4 |
| 17 | 7950140000 | Lockwasher, 0.25” ID | 4 |
| 18 | 7440030000 | Grease Fitting | 1 |

Eastern Wrecker Sales, Inc.
Clayton, NC
919-553-4038
www.easternwrecker.com

## UNDERLIFT ASSEMBLY - 3170000407 - 56,500 LB

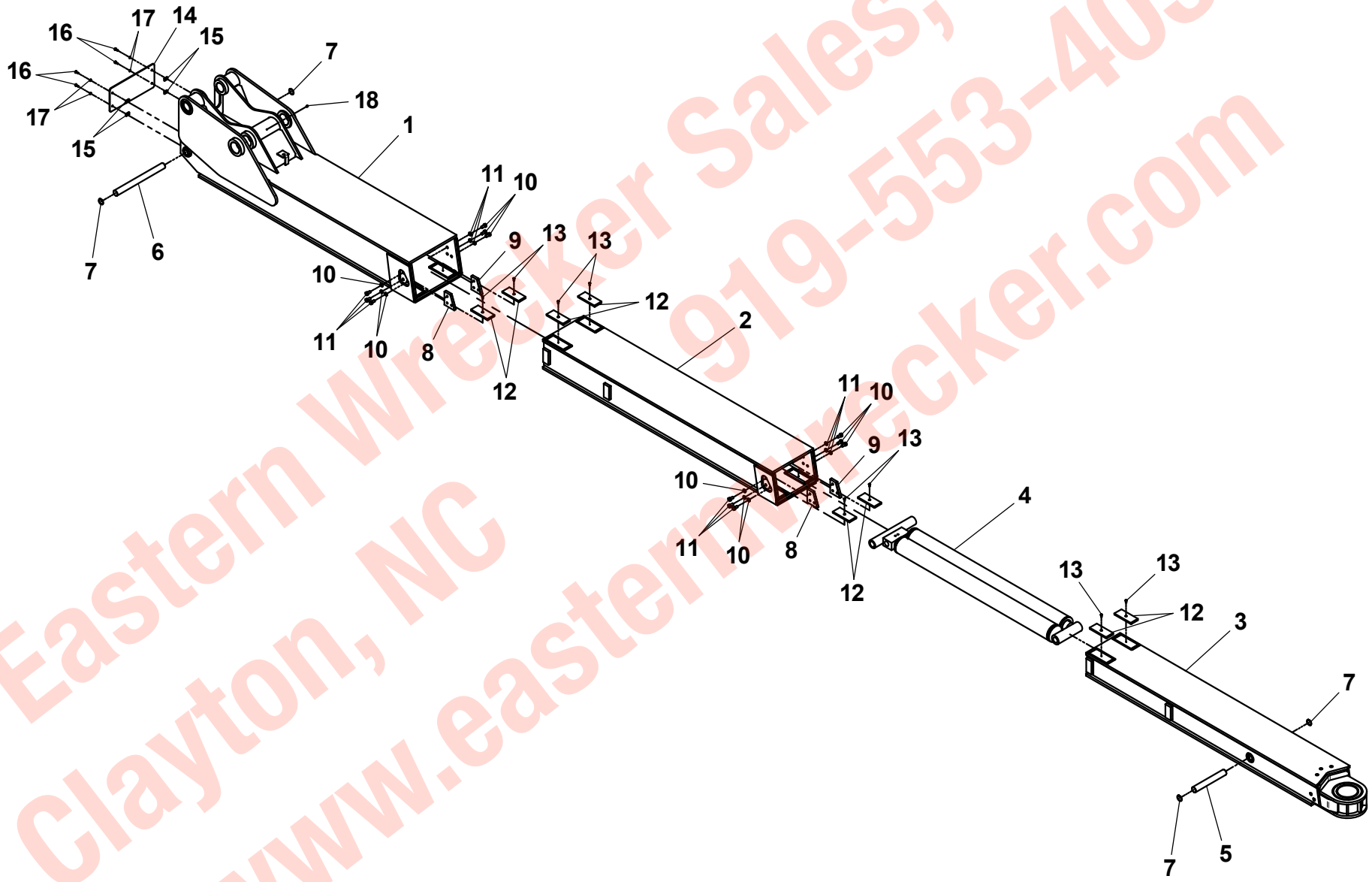


Eastern Wrecker Sales, Inc.
Clayton, NC
919-553-4038
www.easternwrecker.com

## UNDERLIFT EXTENSION CYLINDER ASSEMBLY - 7320000068

| ITEM | PART NO. | DESCRIPTION | QTY |
|---|---|---|---|
| 1 | 9796250081 | Seal, Wiper | 2 |
| 2 | 7019829 | Seal | 2 |
| 3 | 7023518 | Seal, “O” Ring | 1 |
| 4 | 9754250009 | Ring, Back-up | 2 |
| 5 | 9796250057 | Seal, “O” Ring | 2 |
| 6 | 9796250058 | Seal, “O” Ring | 2 |
| 7 | 70050534 | Seal, “O” Ring | 2 |
| 8 | 9796250073 | Seal | 2 |
| 9 | 9754250014 | Ring, Wear | 3 |
| 10 | 80004056 | Ring, Wear | 4 |
| 11 | 7577250334 | Kit, Seal | 1 |
| 12 | 7003116 | Locknut | 1 |
| 13 | 70050535 | Setscrew | 4 |
| 14 | 7005348 | Grease Fitting | 2 |
| 15 | 7005365 | Plug, Port | 2 |
| 16 | 70021648 | Plug, Port | 2 |
| 17 | 9935250025 | Kit, Check Cartridge | 1 |
| 18 | 70050550 | Assembly, Tube | 1 |
| 19 | 70050551 | Assembly, Rod | 1 |
| 20 | 70050552 | Assembly, Rod-Tube | 1 |
| 21 | 9553250010 | Head | 1 |
| 22 | 7024101 | Piston | 1 |
| 23 | 70050540 | Piston | 1 |
| 24 | 70050541 | Head | 1 |

Eastern Wrecker Sales, Inc.
Clayton, NC
919-553-4038
www.easternwrecker.com

## UNDERLIFT EXTENSION CYLINDER ASSEMBLY - 7320000068

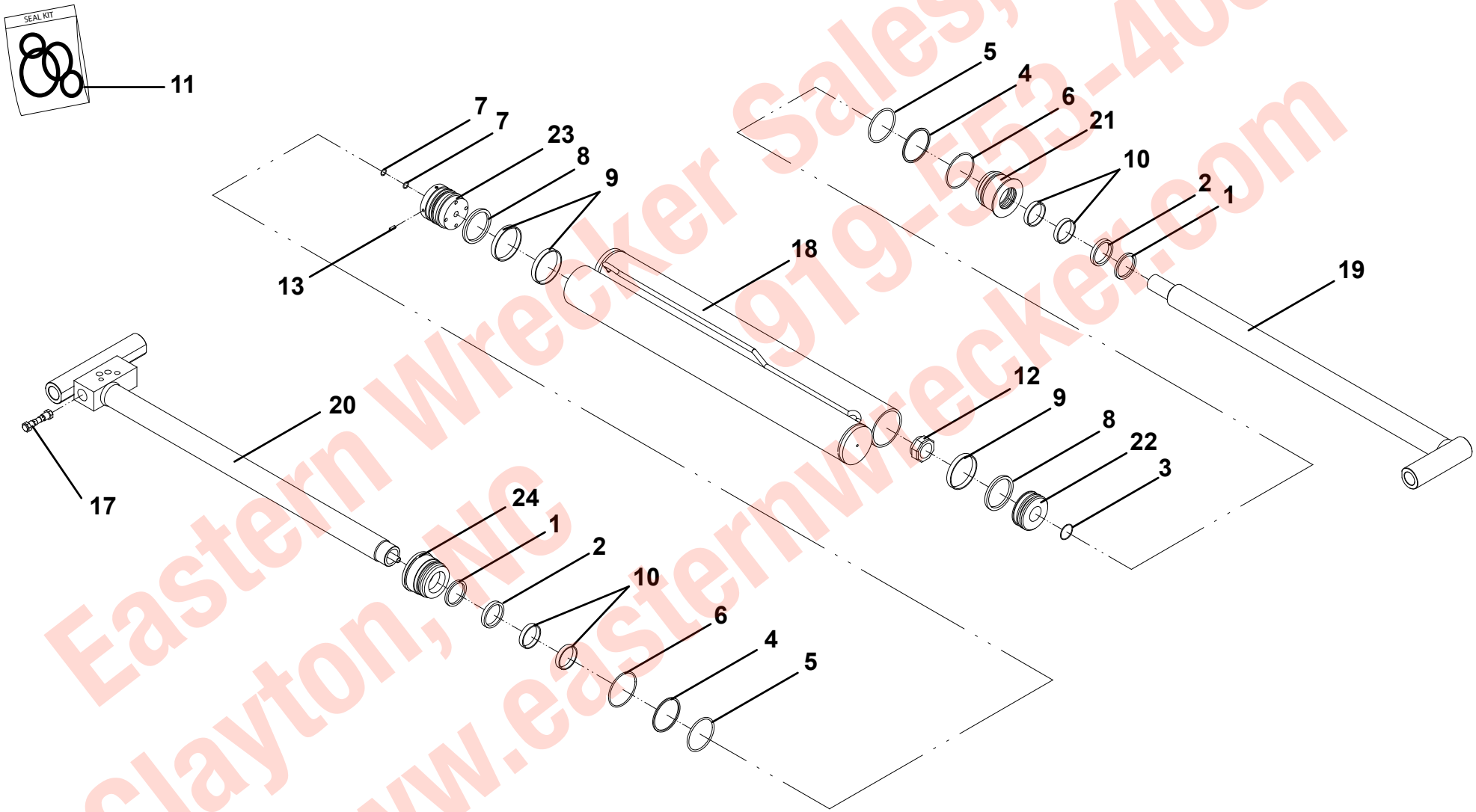


**Items #14, #15 and #16, not shown**

Eastern Wrecker Sales, Inc.
Clayton, NC 919-553-4038
www.easternwrecker.com

## DRAG WINCH INSTALLATION

| ITEM | PART NO. | DESCRIPTION | QTY |
|---|---|---|---|
| 1 | 7970000069 | Winch - DP35 | 1 |
| 2 | 7118201616 | Capscrew, 0.63”-11NC x 2.00” | 8 |
| 3 | 7661000018 | Nut, 0.63”-11NC | 8 |
| 4 | 3249000015 | Sheave Support | 1 |
| 5 | 7754000049 | Retaining Ring | 1 |
| 6 | 3249000012 | Cable Guide Weldment | 1 |
| 7 | 3691000169 | Pin | 1 |
| 8 | 7754000058 | Retaining Ring | 1 |
| 9 | 4949000045 | Washer, 5.00” OD x 1.53” ID | 2 |
| 10 | 7809000006 | Sheave | 1 |
| 11 | 4249000002 | Cable Guide | 2 |
| 12 | 7115142050 | Capscrew, 0.25”-20NC x 2.50” | 2 |
| 13 | 7660142604 | Locknut, 0.25”-20NC | 2 |
| 14 | 7440030000 | Grease Fitting | 2 |
| 15 | 7253000002 | Grease Fitting Cap | 2 |
| 16 | 3912000034* | Tie Back Tube | 1 |
| 17 | 7189000014* | Spring | 2 |
| 18 | 4831000115* | Spacer | 2 |
| 19 | 7120000053* | Ring Bolt, 0.50”-13NC x 10.00” | 1 |
| 20 | 7115181250* | Capscrew, 0.50”-13NC x 1.50” | 4 |
| 21 | 7950180150* | Flatwasher, 0.50” ID | 4 |
| 22 | 7660182601* | Locknut, 0.50”-13NC | 5 |

* Item Sold as Complete Assembly - 3249000038

Eastern Wrecker Sales, Inc.
Clayton, NC 919-553-4038
www.easternwrecker.com

## DRAG WINCH INSTALLATION

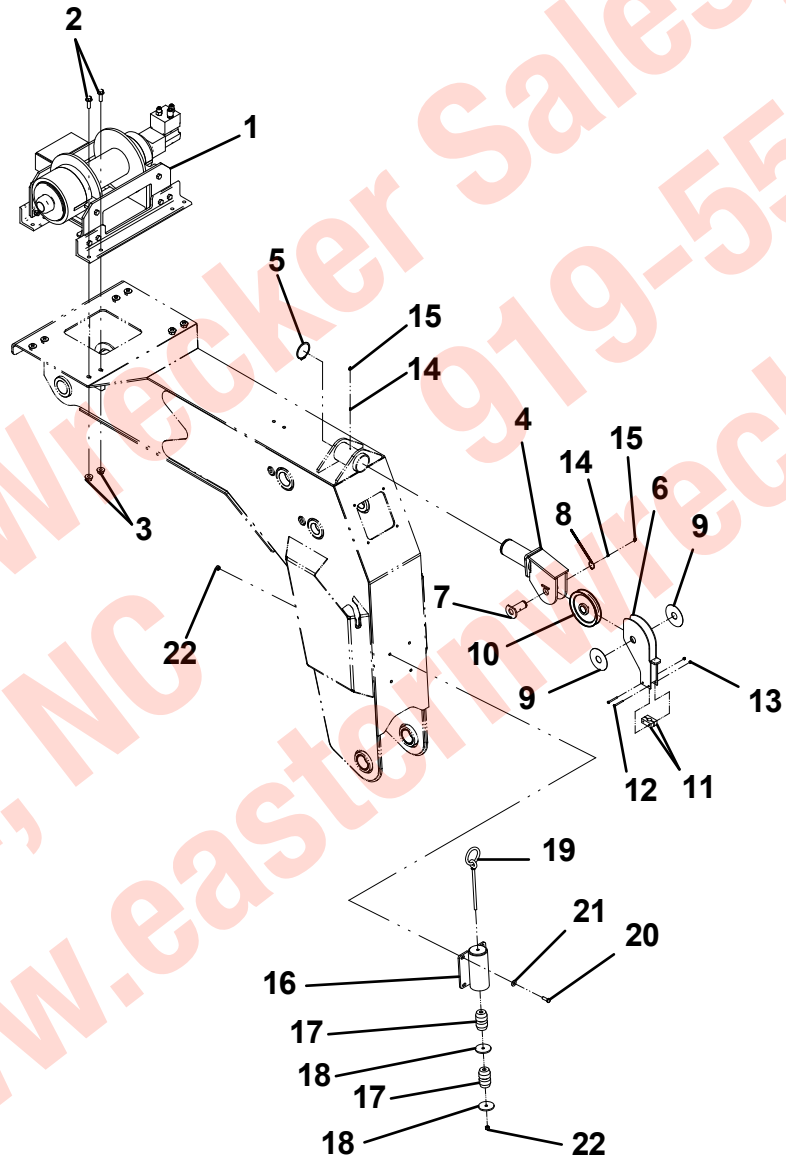


Eastern Wrecker Sales, Inc.
Clayton, NC 919-553-4038
www.easternwrecker.com

## DP WINCH 35K - CABLE WINCH DRUM INSTALLATION

| ITEM | PART NO. | DESCRIPTION | QTY |
|---|---|---|---|
| 1 | 9970960020 | Drum | 1 |
| 2 | 9575960012 | Key, Drum | 2 |
| 3 | 9280960002 | Clip | 1 |
| 4 | 9796960089 | O-Ring, 2.50” ID | 1 |
| 5 | 9831960018 | Spacer | 1 |
| 6 | 7110201423 | Capscrew, 0.63”-11NC x 1.75” | 2 |

Eastern Wrecker Sales, Inc.
919-553-4038
Clayton, NC
www.easternwrecker.com

## DP WINCH 35K - CABLE DRUM INSTALLATION

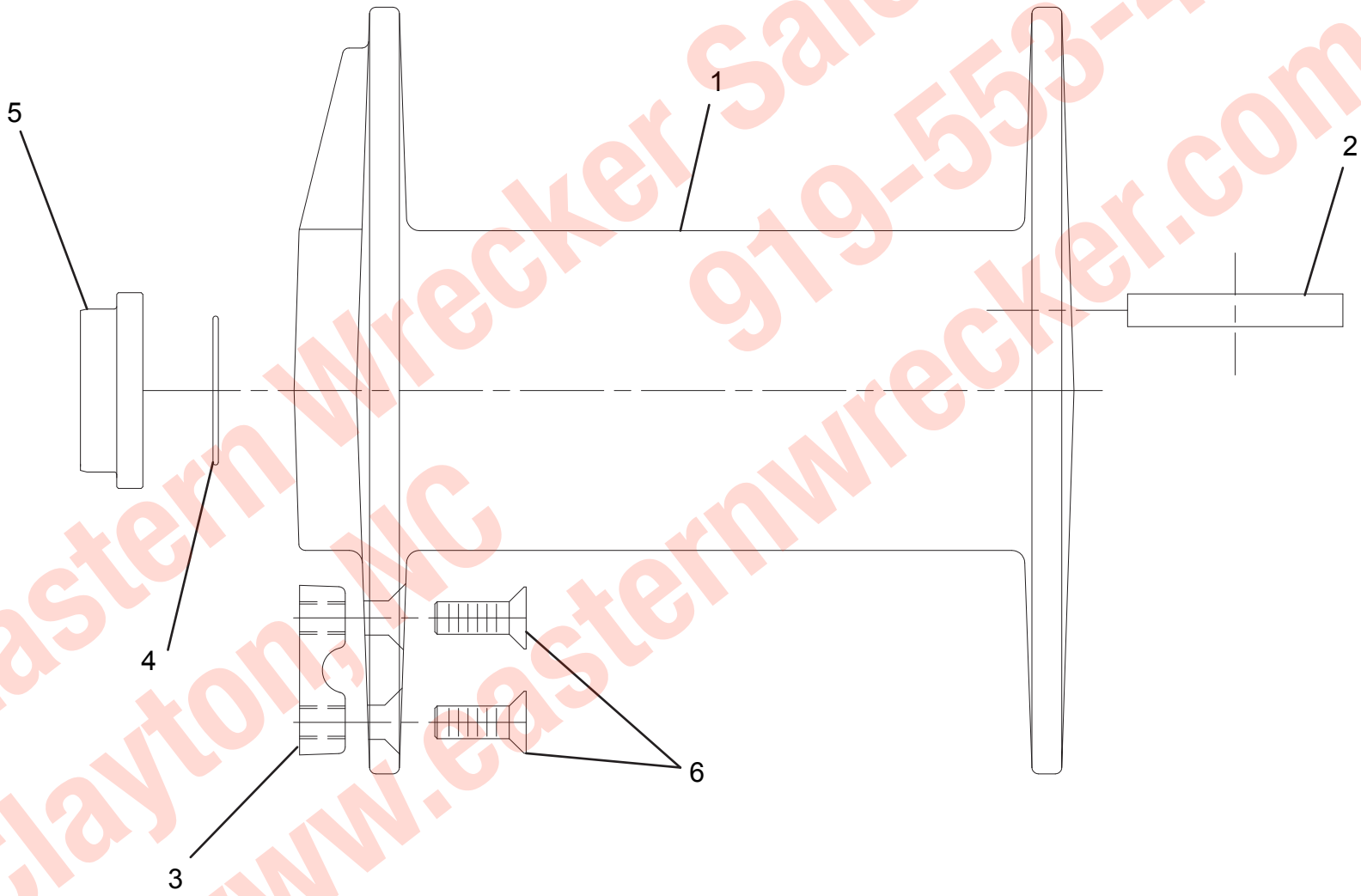


Eastern Wrecker Sales, Inc.
919-553-4038
Clayton, NC
www.easternwrecker.com

## DP WINCH 35K - GEAR END INSTALLATION

| ITEM | PART NO. | DESCRIPTION | QTY |
|---|---|---|---|
| 1 | 9472960056 | Gear | 1 |
| 2 | 9177960003 | Support, Gear End | 1 |
| 3 | 9949960028 | Thrust Washer, 3.82” OD x 0.046” | 1 |
| 4 | 9806960021 | Shaft, Output | 1 |
| 5 | 9949960027 | Thrust Washer, 3.50” OD x 0.19” | 2 |
| 6 | 9472960052 | Carrier Assembly, Primary | 1 |
| 7 | 9472960053 | Carrier Assembly, Secondary | 1 |
| 8 | 9330960006 | Label, Warning | 1 |
| 9 | 9796960120 | O-Ring, 8.75” ID | 1 |
| 10 | 9082960018 | Bearing | 1 |
| 11 | 9796960121 | Seal, 3.13” ID x 0.38” | 1 |
| 12 | 9472960055 | Gear, Sun Secondary | 1 |
| 13 | 9209960025 | Bushing | 1 |

Eastern Wrecker Sales, Inc.
919-553-4038
Clayton, NC
www.easternwrecker.com

## DP WINCH 35K - GEAR END INSTALLATION

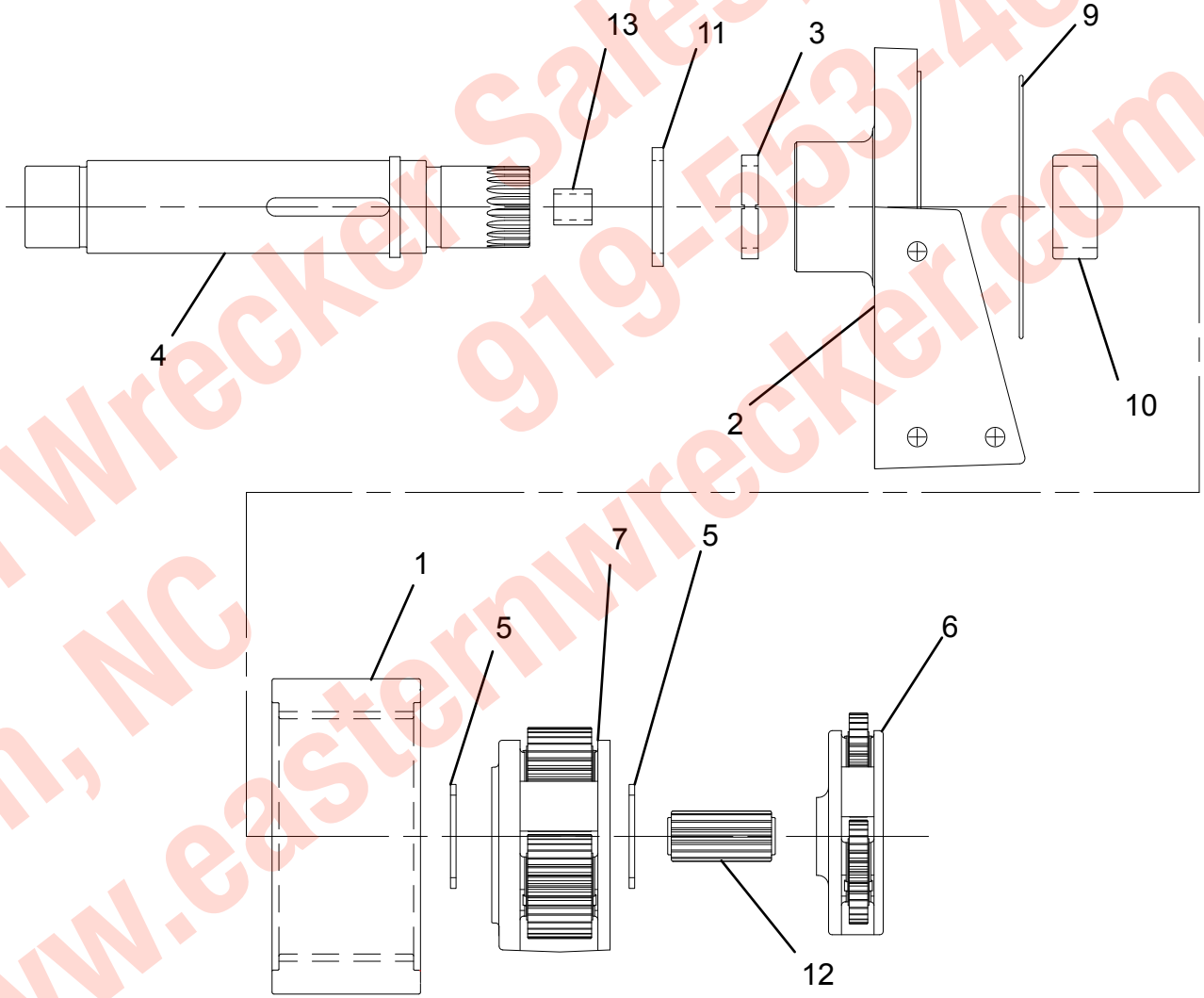


**Items #8 not shown**

Eastern Wrecker Sales, Inc.
919-553-4038
Clayton, NC
www.easternwrecker.com

## DP WINCH 35K - INPUT SHAFT INSTALLATION

| ITEM | PART NO. | DESCRIPTION | QTY |
|---|---|---|---|
| 1 | 9806960020 | Input Shaft | 1 |

Eastern Wrecker Sales, Inc.
919-553-4038
Clayton, NC
www.easternwrecker.com

## DP WINCH 35K - INPUT SHAFT INSTALLATION

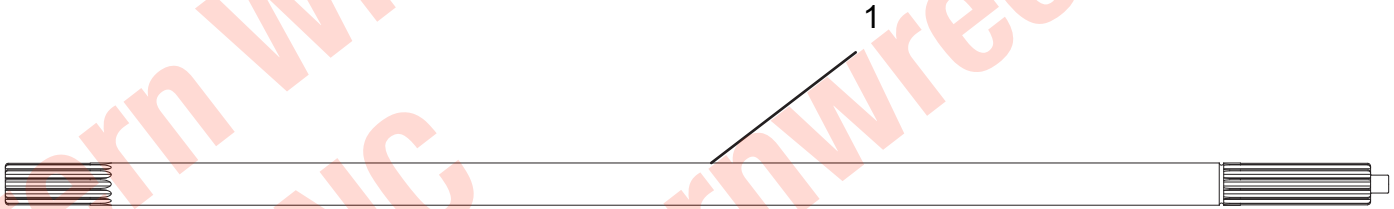


Eastern Wrecker Sales, Inc.
919-553-4038
Clayton, NC
www.easternwrecker.com

## DP WINCH 35K - BASE MOUNT INSTALLATION

| ITEM | PART NO. | DESCRIPTION | QTY |
|---|---|---|---|
| 1 | 9073960003 | Base Mount | 2 |
| 2 | 7115201850 | Capscrew, 0.63”-11NC x 2.25” | 4 |
| 3 | 7660200001 | Nut, 0.63”-11NC | 12 |
| 4 | 7950200000 | Lockwasher, 0.63” ID | 12 |
| 5 | 70050147 | Rivet | 4 |
| 6 | 70050384 | Plate, Winch ID | 1 |
| 7 | 9073960004 | Base Mount | 2 |
| 8 | 7115202250 | Capscrew, 0.63”-11NC x 2.75” | 8 |

Eastern Wrecker Sales, Inc.
919-553-4038
Clayton, NC
www.easternwrecker.com

## DP WINCH 35K - BASE MOUNT INSTALLATION

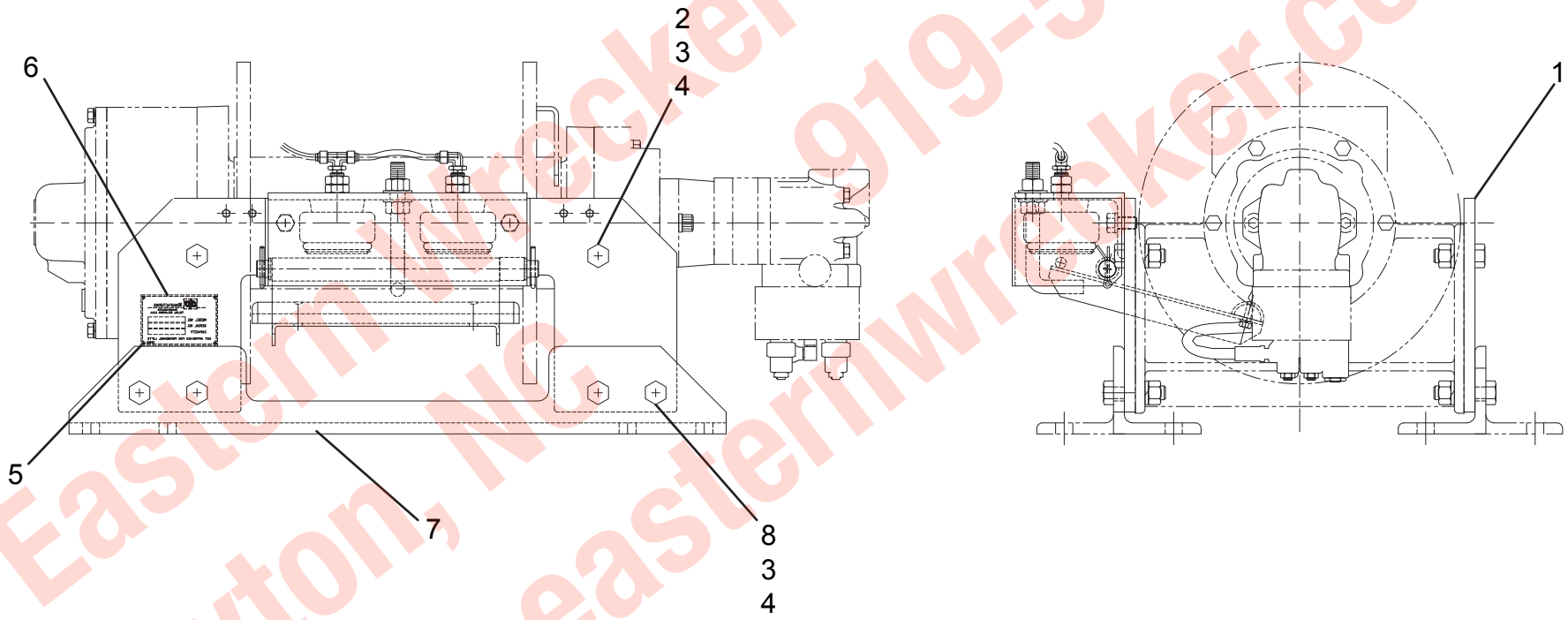


Eastern Wrecker Sales, Inc.
Clayton, NC 919-553-4038
www.easternwrecker.com

## DP WINCH 35K - GEAR END COVER INSTALLATION

| ITEM | PART NO. | DESCRIPTION | QTY |
|---|---|---|---|
| 1 | 9314960022 | Cover, Gear End | 1 |
| 2 | 9698960016 | Piston | 1 |
| 3 | 9698960015 | Cylinder, Piston | 1 |
| 4 | 9309960011 | Coupling | 1 |
| 5 | 9754960026 | Retainer Ring | 1 |
| 6 | 9796960120 | O-Ring, 8.75” ID | 1 |
| 7 | 9209960026 | Bushing | 1 |
| 8 | 9754960046 | Retainer Ring | 1 |
| 9 | 9754960047 | Retainer Ring | 1 |
| 10 | 9843960032 | Spring | 1 |
| 11 | 9949960028 | Thrust Washer | 1 |
| 12 | 9796960119 | O-Ring, 2.63” ID | 2 |
| 13 | 9796960118 | O-Ring, 2.13” ID | 1 |
| 14 | 9701960011 | Plug | 1 |
| 15 | 9701960012 | Plug | 1 |
| 16 | 9701960018 | Plug | 1 |
| 17 | 9183960001 | Vent | 1 |
| 18 | 7118165250 | Capscrew, 0.38”-16NC x 6.50” | 12 |
| 19 | 7950160000 | Lockwasher, 0.38” ID | 12 |
| 20 | 9472960054 | Gear, 15 Teeth | 1 |

Eastern Wrecker Sales, Inc.
Clayton, NC
919-553-4038
www.easternwrecker.com

## DP WINCH 35K - GEAR END COVER INSTALLATION

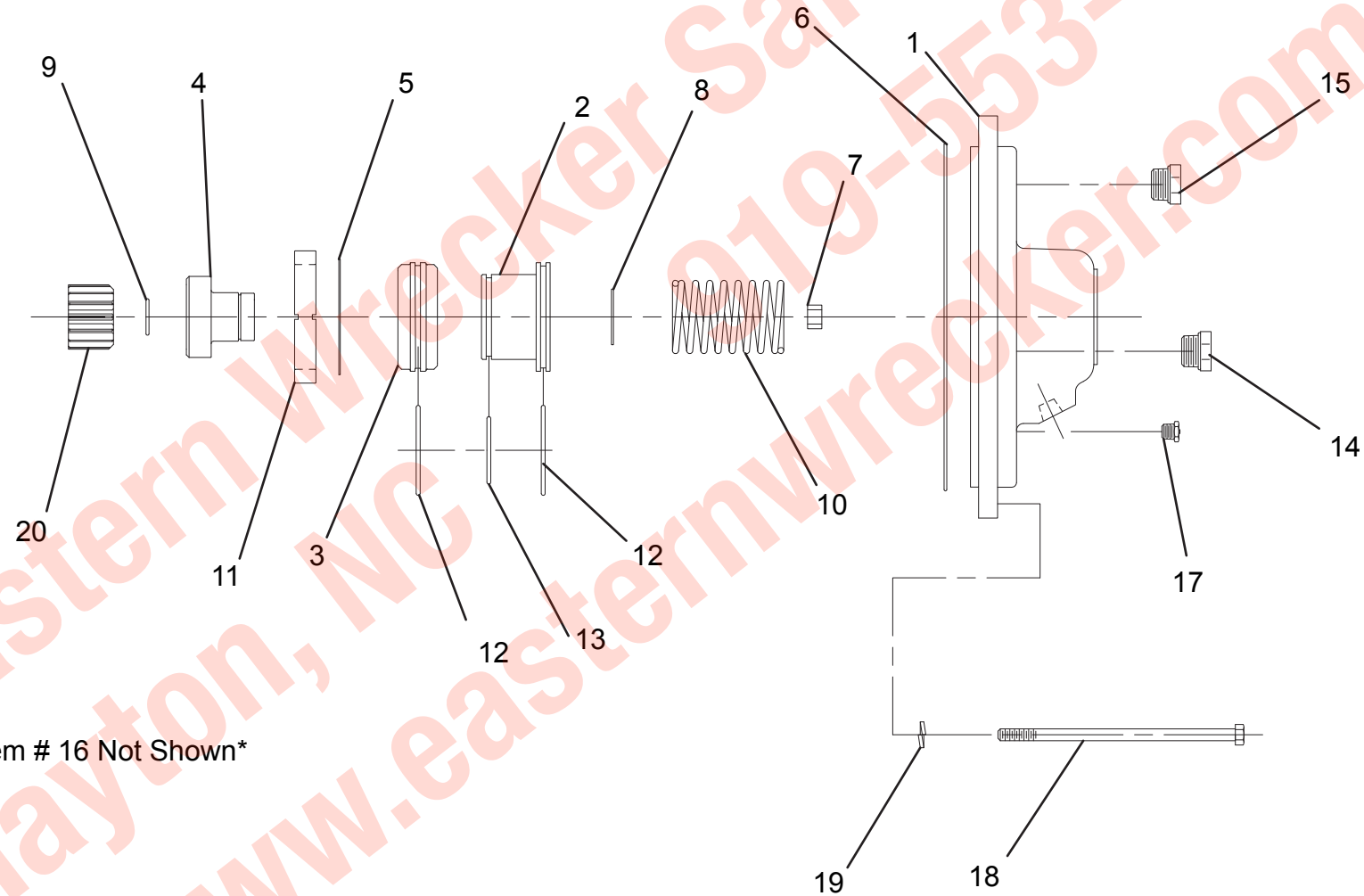


*Item # 16 Not Shown*

Eastern Wrecker Sales, Inc.
Clayton, NC 919-553-4038
www.easternwrecker.com

## DP WINCH - MOTOR END INSTALLATION

| ITEM | PART NO. | DESCRIPTION | QTY |
|---|---|---|---|
| 1 | 70050399 | Motor, Hydraulic | 1 |
| 2 | 70050368 | Valve, Counterbalance | 1 |
| 3 | 9571960006 | Brake Housing | 1 |
| 4 | 9177960004 | Support, Motor End | 1 |
| 5 | 6906960019 | Shaft Brake | 1 |
| 6 | 9698960008 | Piston, Brake | 1 |
| 7 | # | Plate, Friction Disc | 10 |
| 8 | # | Plate, Drive Brake | 9 |
| 9 | 9691960021 | Pin | 2 |
| 10 | ## | O-Ring, 6.75” ID | 1 |
| 11 | ## | O-Ring, 6.50” ID | 1 |
| 12 | ## | O-Ring, 5.38” ID | 2 |
| 13 | ## | Ring, Back-Up 6.50” ID | 1 |
| 14 | ## | Ring, Back-Up 5.278” ID | 1 |
| 15 | 70050371 | Cartridge | 1 |
| 16 | 9082960013 | Bearing, 1.75” ID | 2 |
| 17 | # | Compression Spring | 12 |
| 18 | 7118181205 | Capscrew, 0.50”-13NC x 1.50” | 2 |
| 19 | 7950180800 | Lockwasher, 0.50” ID | 2 |
| 20 | 7118172050 | Capscrew, 0.44”-14NC x 2.50” | 6 |
| 21 | 7950170000 | Lockwasher, 0.44” ID | 6 |
| 22 | 70050370 | Capscrew, 0.38”-24NF x 2.50” | 4 |
| 23 | 7445040445 | Adapter | 3 |
| 24 | 70050400 | Hose | 1 |
| 25 | 70050401* | Tag, Warning | 1 |
| 26 | 9082960018 | Bearing | 1 |
| 27 | < | Seal, 3.13” ID | 1 |
| 28 | 9935960026 | Cartridge | 2 |
| 29 | 9949960028 | Thrust Washer | 1 |
| 30 | < | O-Ring, 3.00” ID | 1 |
| 31 | 70050372 | Hose | 1 |
| 32 | 9443960006 | Adapter | 1 |
| 33 | 70050369< | O-Ring, 1.13” ID | 2 |
| 34 | 9796960088< | O-Ring, 0.82” ID | 2 |

< Part Sold With Winch Service Kit - 70050402
# Part Sold With Disk & Spring Kit - 9577960139
## Part Sold With Brake Seal Kit - 9577960120

Eastern Wrecker Sales, Inc.
Clayton, NC 919-553-4038
www.easternwrecker.com

## DP WINCH - MOTOR END INSTALLATION

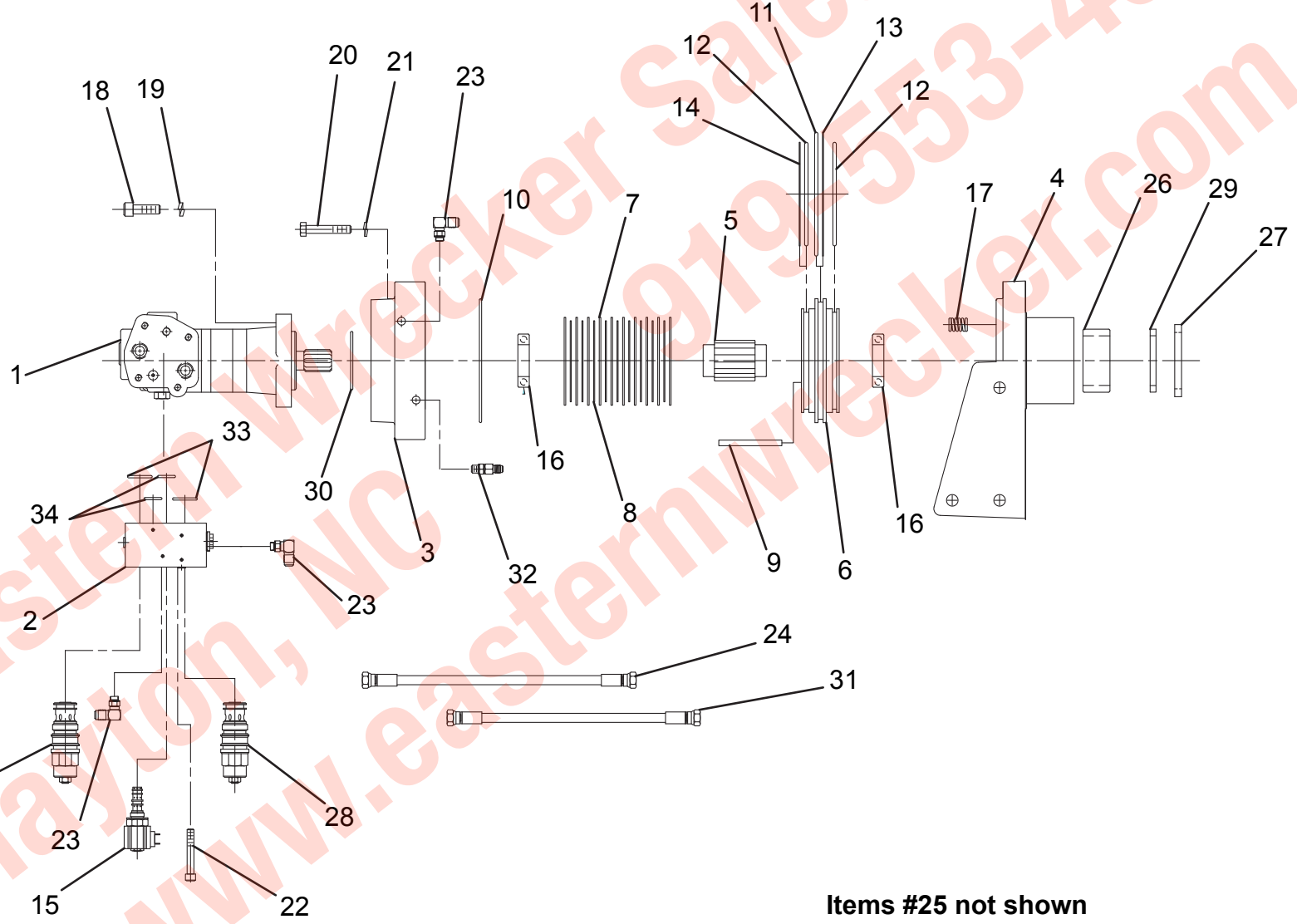


**Items #25 not shown**

Eastern Wrecker Sales, Inc.
Clayton, NC 919-553-4038
www.easternwrecker.com

## DP WINCH - CABLE HOLD DOWN KIT

| ITEM | PART NO. | DESCRIPTION | QTY |
|---|---|---|---|
| 1 | 9178960011 | Mounting Bracket | 1 |
| 2 | 9020960002 | Pivot Arm | 1 |
| 3 | 9064960007 | Rub Bar | 1 |
| 4 | 9691960019 | Pin | 1 |
| 5 | 9843960023 | Air Spring | 2 |
| 6 | 9690960039 | Cotter Pin | 2 |
| 7 | 7950180000 | Lockwasher, 0.50” ID | 2 |
| 8 | 7115181650 | Capscrew, 0.50”-13NC x 1.00” | 2 |
| 9 | 9949960012 | Thrust Washer | 2 |
| 10 | 7660200200 | Nut, 0.63”-11NC | 4 |
| 11 | 9120960063 | Capscrew, 0.32”-18NC x 1.00” | 2 |
| 12 | 9912960010 | Tubing | 3 |
| 13 | 7443000205 | Adapter | 3 |
| 14 | 7443000204 | Adapter | 1 |
| 15 | 9949960050 | Lockwasher, 0.32” ID | 2 |
| 16 | 9831960009 | Spacer | 1 |
| 17 | 9120960019 | Anchor Bolt | 1 |
| 18 | 7950200151 | Flatwasher, 0.63” ID | 2 |
| 19 | 7660200001 | Nut, 0.63”-11NC | 1 |

Eastern Wrecker Sales, Inc.
Clayton, NC
919-553-4038
www.easternwrecker.com

## DP WINCH - CABLE HOLD DOWN KIT

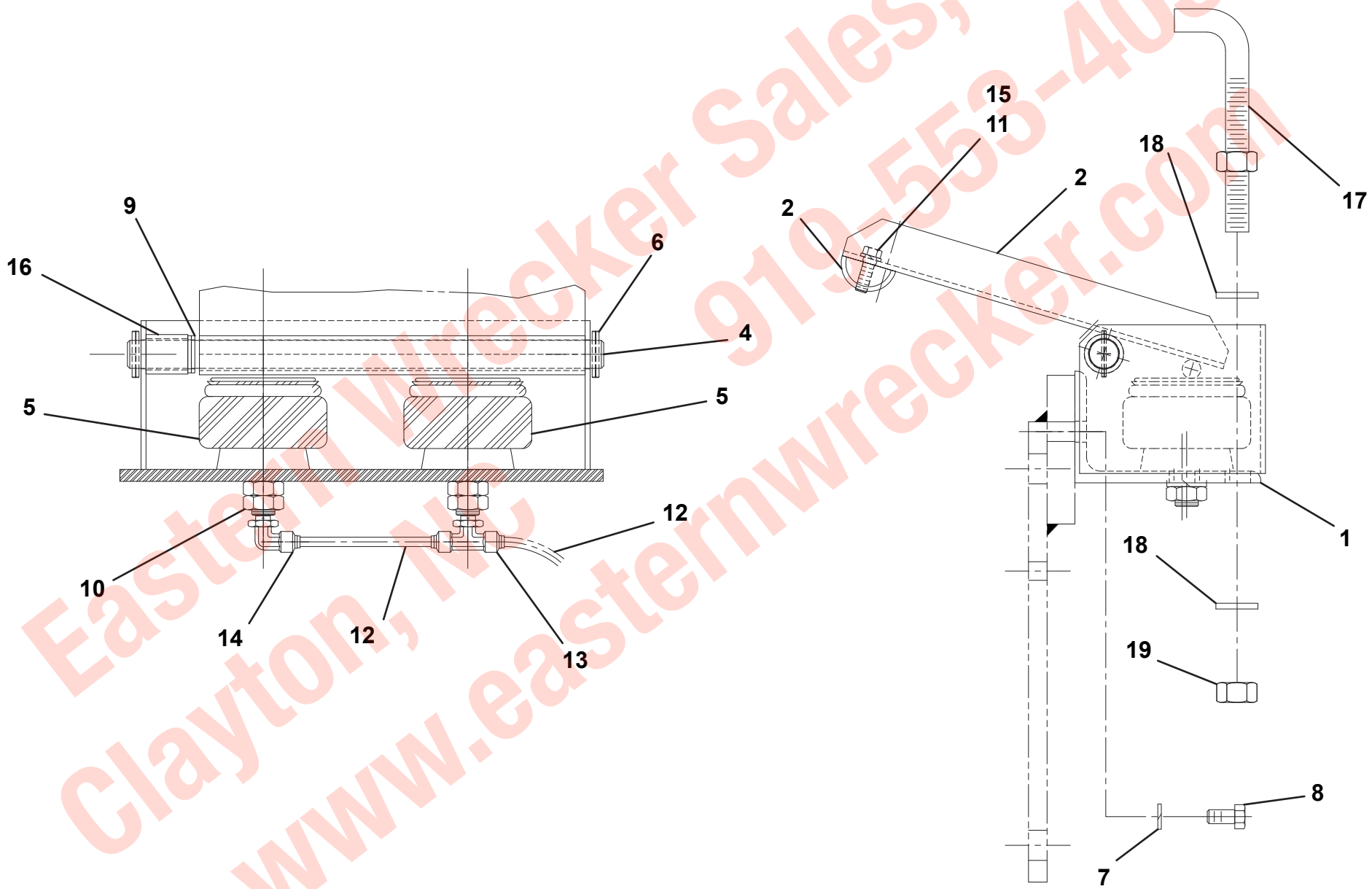


Eastern Wrecker Sales, Inc.
Clayton, NC 919-553-4038
www.easternwrecker.com

## TRAILER AUXILIARY INSTALLATION

| ITEM | PART NO. | DESCRIPTION | QTY |
|---|---|---|---|
| 1 | 7346000055 | Electrical Receptacle | 1 |
| 2 | 7346000078 | Electrical Boot | 1 |
| 3 | 7115150864 | Bolt, 0.31”-18NC x 1.00” | 2 |
| 4 | 7950150161 | Flatwasher, 0.31” ID | 2 |
| 5 | 7660152601 | Locknut, 0.31”-18NC | 2 |
| 6 | 7312000015 | Gladhand, Blue | 1 |
| 7 | 7312000016 | Gladhand, Red | 1 |
| 8 | 7446502518 | Fitting | 2 |
| 9 | 7445060435 | Fitting | 4 |
| 10 | 7565000014 | Airline, 0.38” OD | 50ft |
| 11 | 7443000148 | Bushing | 2 |
| 12 | 7443000146 | Elbow | 2 |
| 13 | 7443000145 | Bushing | 2 |
| 14 | 7577000145 | Seal Kit | 1 |

Eastern Wrecker Sales, Inc.
919-553-4038
Clayton, NC
www.easternwrecker.com

## TRAILER AUXILIARY INSTALLATION

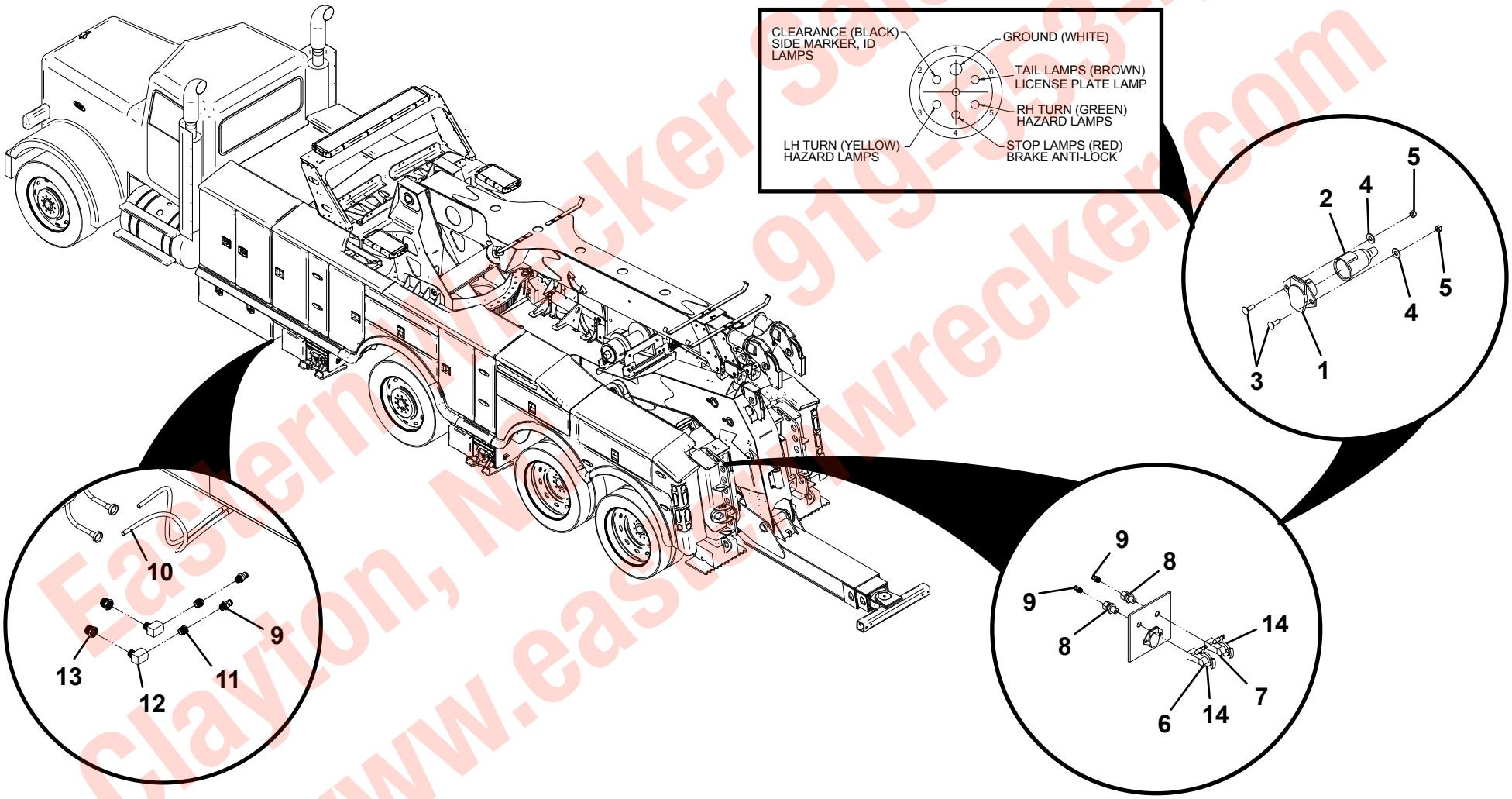


Eastern Wrecker Sales, Inc.
Clayton, NC 919-553-4038
www.easternwrecker.com

## UNDERLIFT TOOLS - FRAME FORKS

| ITEM | PART NO. | DESCRIPTION | QTY |
|---|---|---|---|
| 1 | 3007000004 | Adapter, Chain Hook | 2 |
| 2 | 7007000056 | Adapter, Frame Fork - RH | 1 |
| 3 | 7007000055 | Adapter, Frame Fork - LH | 1 |
| 4 | 3178000226 | Spring Lift Bracket | 2 |
| 5 | 7454000006 | Fork, 3.00” Short | 2 |
| 6 | 7454000005 | Fork, 3.00” Medium | 2 |
| 7 | 7454000003 | Fork, 4.50” Medium | 2 |
| 8 | 7454000004 | Fork, 4.50” Long | 2 |
| 9 | 3551000036 | T-Handle | 2 |
| 10 | 7691000022 | Pin | 2 |
| 11 | 7691000020 | Hairpin | 2 |
| 12 | 7691000021 | Hitch Pin | 2 |
| 13 | 7262000026 | Chain, Tie-Down | 2 |

Eastern Wrecker Sales, Inc.
919-553-4038
Clayton, NC
www.easternwrecker.com

## UNDERLIFT TOOLS - FRAME FORKS

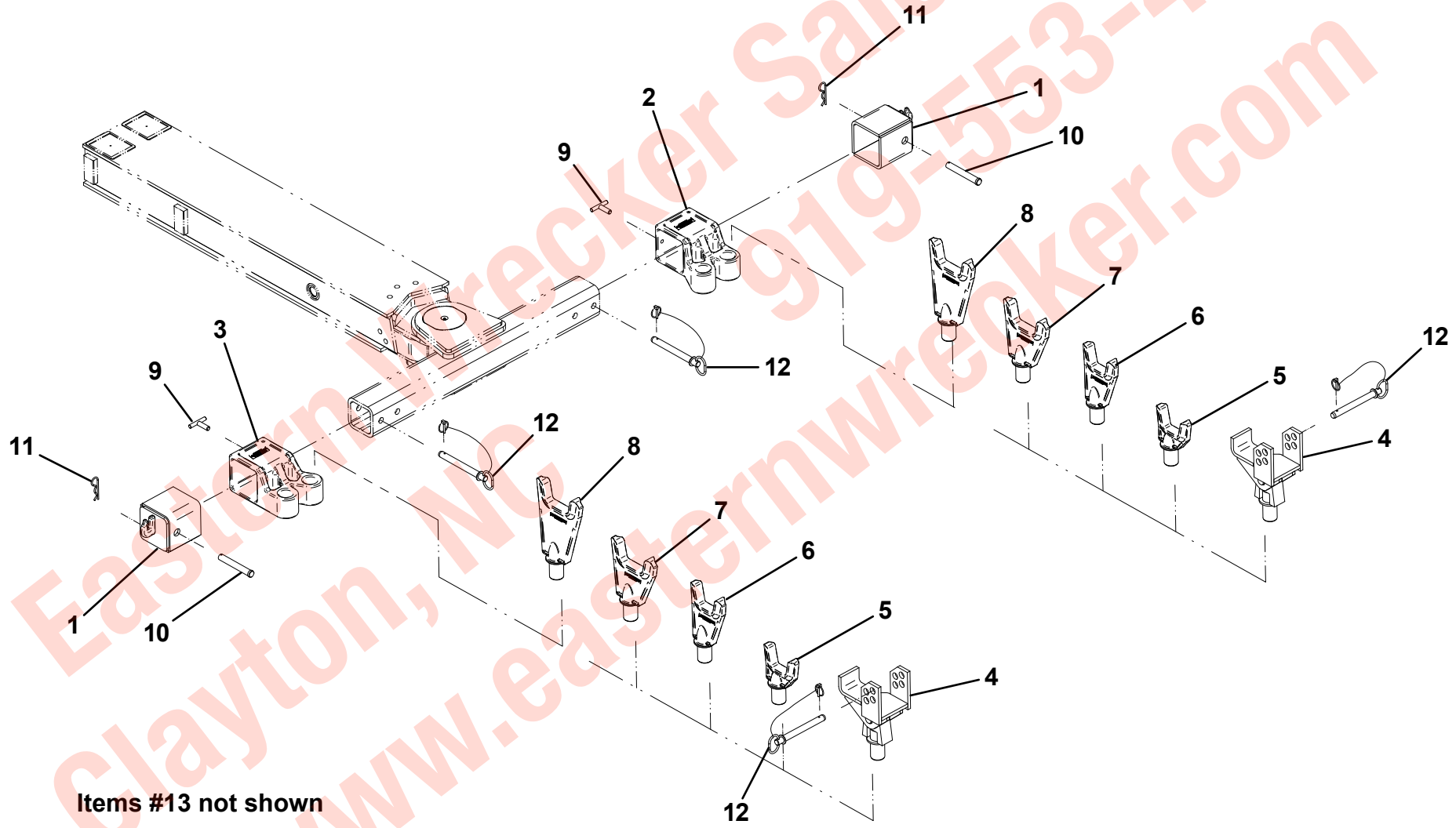


Items #13 not shown

Eastern Wrecker Sales, Inc.
Clayton, NC 919-553-4038
www.easternwrecker.com

## UNDERLIFT TOOLS - 14,000 LB TIRE LIFT

| ITEM | PART NO. | DESCRIPTION | QTY |
|---|---|---|---|
| 1 | 3484000048 | Tire Lift Grid - RH | 1 |
| 2 | 3484000049 | Tire Lift Grid - LH | 1 |
| 3 | 3020000120 | Tire Lift Arm Weldment - RH | 1 |
| 4 | 3020000119 | Tire Lift Arm Weldment - LH | 1 |
| 5 | 3912000038 | Tire Lift Tube Weldment - 23” Long | 2 |
| | 3912000033 | Tire Lift Tube Weldment - 27.5” Long | 2 |
| 6 | 7691000026 | Hitch Pin | 2 |
| 7 | 4691000274 | Pin | 2 |
| 8 | 7691000020 | Hairpin | 2 |
| 9 | 7691000021 | Hitch Pin | 2 |
| 10 | 4561000012 | Hook, Pull | 1 |
| 11 | 7894000037 | Strap, 2” Wide (Standard - Yellow) | 2 |
| | 7894000041 | Strap, 2” Wide (Optional - Orange) | |
| 12 | 7894000028 | Ratchet, 2” Wide Strap | 4 |
| 13 | 3561000008 | Hook, 2” Wide Strap | 4 |
| 14 | 7330000550 | Decal | 2 |
| 15 | 7759000004 | Rivet | 8 |
| 16 | 7330000278 | Decal | 2 |

Eastern Wrecker Sales, Inc.
919-553-4038
Clayton, NC
www.easternwrecker.com

## UNDERLIFT TOOLS - 14,000 LB TIRE LIFT

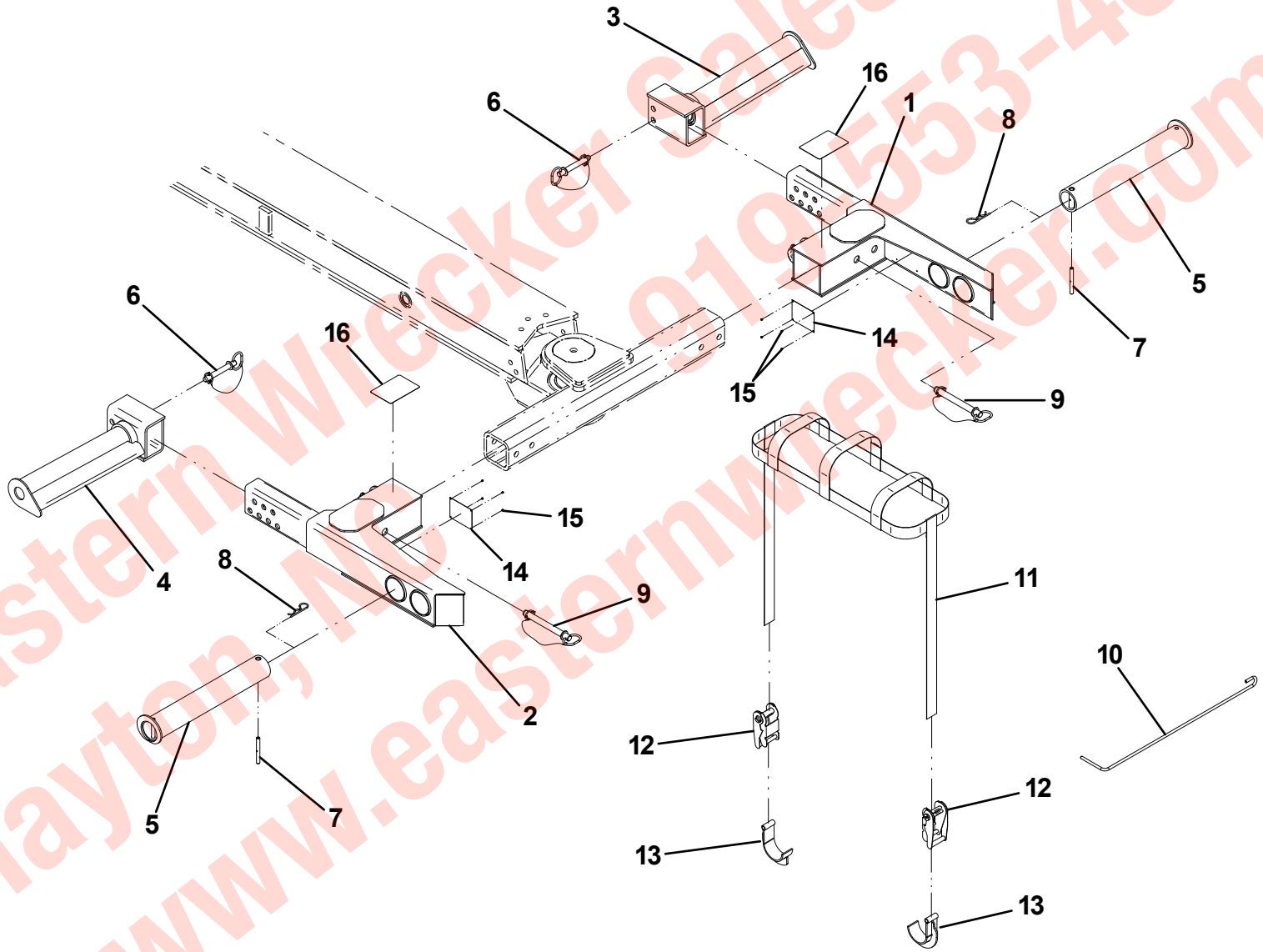


Eastern Wrecker Sales, Inc.
Clayton, NC 919-553-4038
www.easternwrecker.com

## UNDERLIFT TOOLS - 25,000 LB TIRE LIFT

| ITEM | PART NO. | DESCRIPTION | QTY |
|---|---|---|---|
| 1 | 3484000072^ | Tire Lift Grid - LH | 1 |
| 2 | 3484000073^ | Tire Lift Grid - RH | 1 |
| 3 | 3020000119^ | Tire Lift Arm Weldment - LH | 1 |
| 4 | 3020000120^ | Tire Lift Arm Weldment - RH | 1 |
| 5 | 3912000038^ | Tire Lift Tube Weldment - 23” Long | 2 |
| 6 | 3912000033^ | Tire Lift Tube Weldment - 27.5” Long | 2 |
| 7 | 4691000274^ | Pin | 2 |
| 8 | 7691000020^ | Hairpin | 2 |
| 9 | 7330000278^ | Decal | 2 |
| 10 | 7330000550^ | Decal | 2 |
| 11 | 7759000004^ | Rivet | 8 |
| 12 | 4561000012^ | Hook, Pull | 1 |
| 13 | 3561000015* | Hook, 3” Wide Strap | 4 |
| 14 | 7894000060* | Ratchet, 3” Wide Strap | 4 |
| 15 | 7894000057* | Strap, 3” Wide | 2 |
| 16 | 3561000008^ | Hook, 2” Wide Strap | 4 |
| 17 | 7894000028^ | Ratchet, 2” Wide Strap | 4 |
| 18 | 7894000037^ | Strap, 2” Wide | 2 |
| 19 | 7691000021 | Hitch Pin | 2 |
| 20 | 7691000026^ | Hitch Pin | 2 |

^ Also available as - 2502880300
* Available in Strap Kit - 7577000368

Eastern Wrecker Sales, Inc.
Clayton, NC 919-553-4038
www.easternwrecker.com

## UNDERLIFT TOOLS - 25,000 LB TIRE LIFT

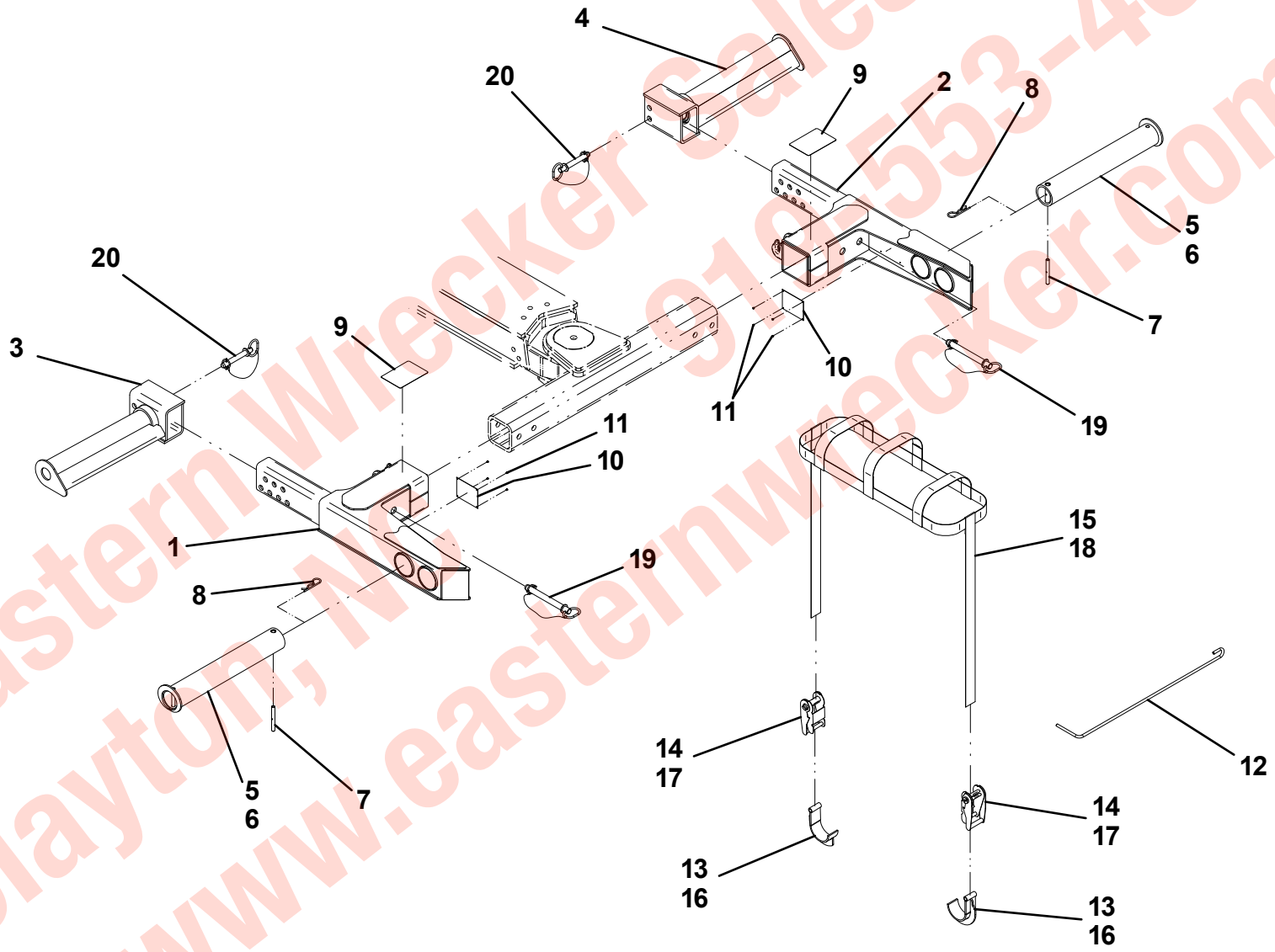


Eastern Wrecker Sales, Inc.
Clayton, NC 919-553-4038
www.easternwrecker.com

## UNDERLIFT TOOLS - FIFTH WHEEL ATTACHMENT

| ITEM | PART NO. | DESCRIPTION | QTY |
|---|---|---|---|
| 1 | 3178000240* | Bracket Weldment | 1 |
| 2 | 3178000499* | Bracket, Fifth Wheel Weldment | 1 |
| 3 | 3706000080* | Plate Weldment | 1 |
| 4 | 3691000144* | Pin | 1 |
| 5 | 3691000145* | Pin | 1 |
| 6 | 7118267250* | Capscrew, 1.00”-8NC x 9.00” | 2 |
| 7 | 7120000036* | Capscrew, 0.75”-10NC x 3.25” | 2 |
| 8 | 7691000025* | Pin | 2 |

* Also available as - 2503880033

Eastern Wrecker Sales, Inc.
919-553-4038
Clayton, NC
www.easternwrecker.com

## UNDERLIFT TOOLS - FIFTH WHEEL ATTACHMENT

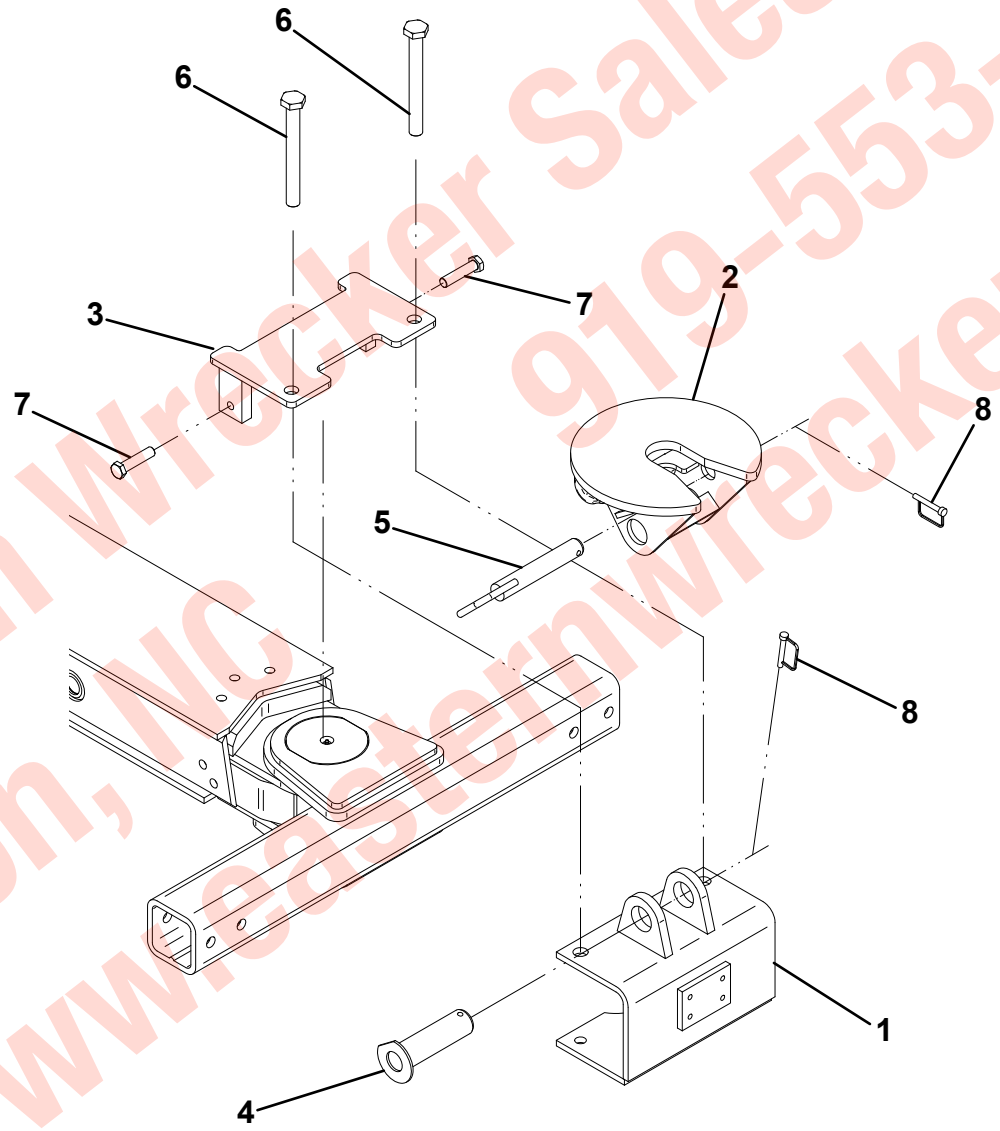


Eastern Wrecker Sales, Inc.
Clayton, NC 919-553-4038
www.easternwrecker.com

## UNDERLIFT TOOLS - PINTLE HOOK

| ITEM | PART NO. | DESCRIPTION | QTY |
|---|---|---|---|
| 1 | 7561000020 | Hitch, Pintle Hook with 2” Dia. Ball | 1 |
| 2 | 7118181250 | Capscrew, 0.50”-13NC x 1.50” | 4 |
| 3 | 7950180000 | Lockwasher, 0.50” ID | 4 |
| 4 | 7056000003 | Ball, 1.88” Dia | 1 |
| | 7056000004 | Ball, 2.00” Dia | |
| | 7056000005 | Ball, 2.31” Dia | |
| | 7056000006 | Ball, 50mm Dia | |

Eastern Wrecker Sales, Inc.
919-553-4038
Clayton, NC
www.easternwrecker.com

## UNDERLIFT TOOLS - PINTLE HOOK

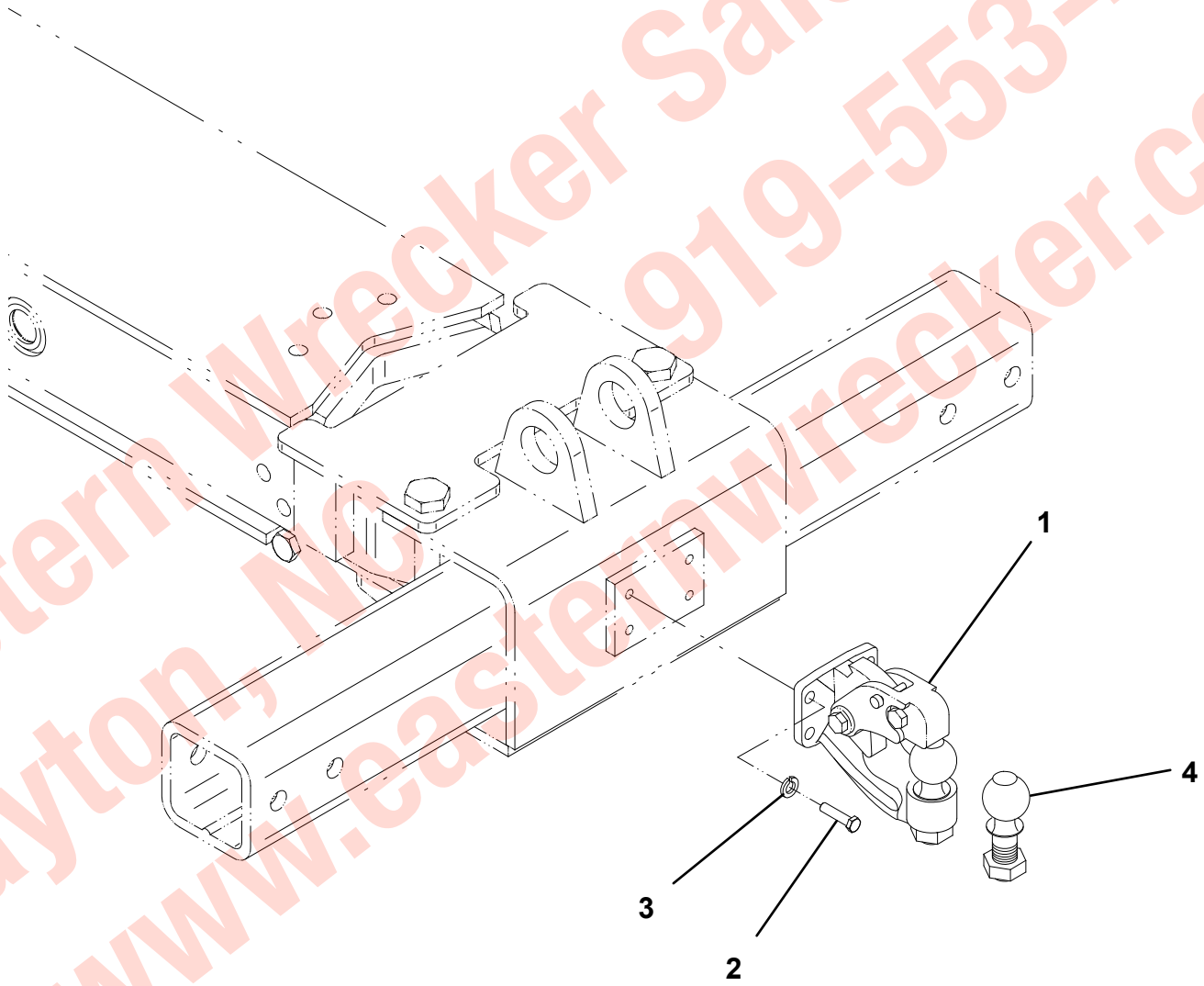


Eastern Wrecker Sales, Inc.
Clayton, NC 919-553-4038
www.easternwrecker.com

## CROSSTUBE INSTALLATION

| ITEM | PART NO. | DESCRIPTION | QTY |
|---|---|---|---|
| 1 | 3913000094 | Crosstube Weldment | 1 |
| 2 | 4691000242 | Pin | 1 |
| 3 | 7754000042 | Retaining Ring | 1 |
| 4 | 7440300000 | Grease Fitting | 1 |
| 5 | 7209000022 | Bushing | 1 |
| 6 | 4949000041* | Washer, 0.125” Thk | 1 |
| 7 | 4949000042* | Washer, 0.63” Thk | 2 |

* Available in Shim Kit - 3577000018

Eastern Wrecker Sales, Inc.
919-553-4038
Clayton, NC
www.easternwrecker.com

## CROSSTUBE INSTALLATION

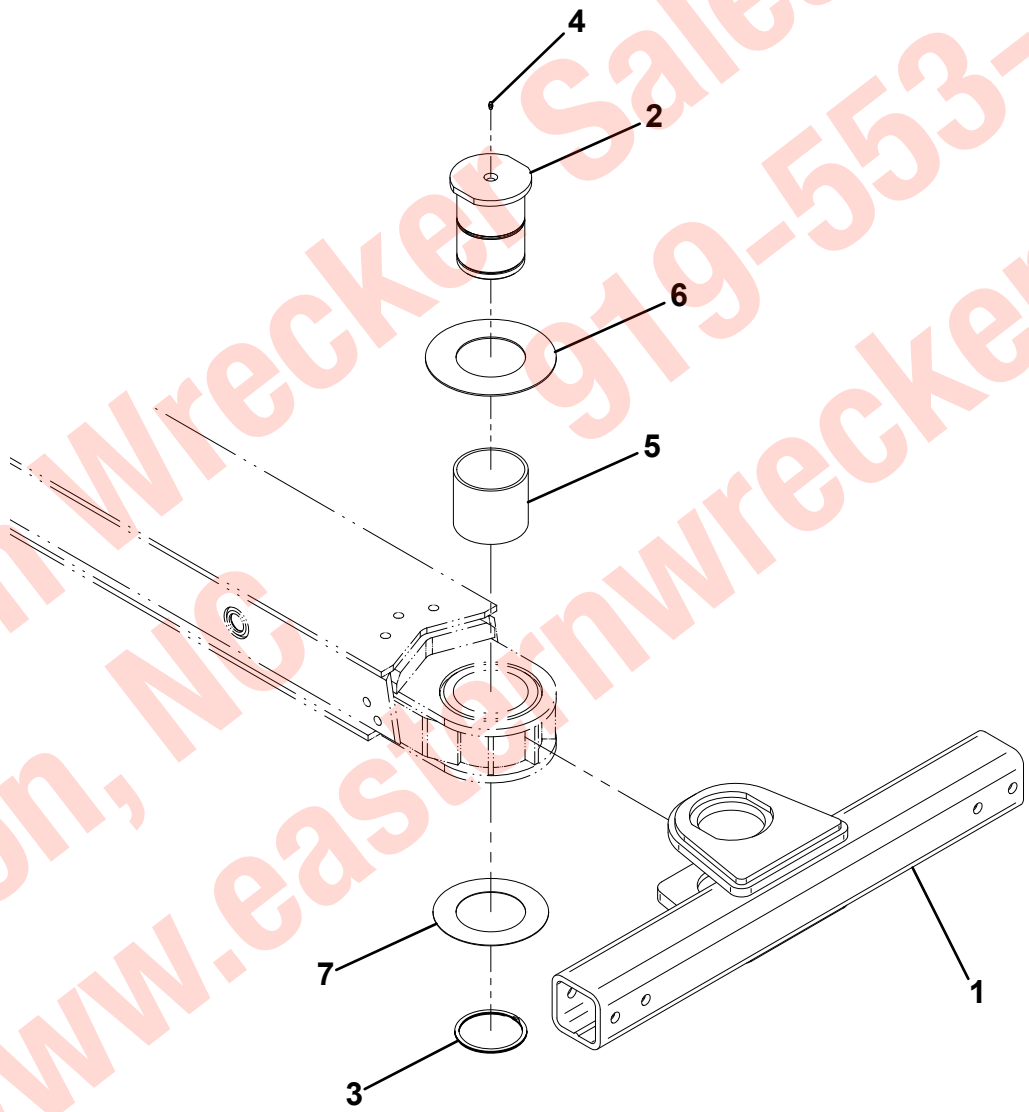


Eastern Wrecker Sales, Inc.
Clayton, NC 919-553-4038
www.easternwrecker.com

## REAR BODY INSTALLATION

| ITEM | PART NO. | DESCRIPTION | QTY |
|---|---|---|---|
| 1 | 1001137019 | Body Assembly - Rear RH | 1 |
| 2 | 1001137018 | Body Assembly - Rear LH | 1 |
| 3 | 7115202850 | Capscrew, 0.63”-11NC x 3.50” | 8 |
| 4 | 7636000008 | Rubber Mount | 8 |
| 5 | 7660200001 | Nut, 0.63”-11NC | 8 |
| 6 | 7494000019 | Washer, Snub Head | 8 |
| 7 | 7949000020 | Washer, Snub Tail | 8 |
| 8 | 7950200161 | Flatwasher, 0.63” ID | 8 |

Eastern Wrecker Sales, Inc.
919-553-4038
Clayton, NC
www.easternwrecker.com

## REAR BODY INSTALLATION

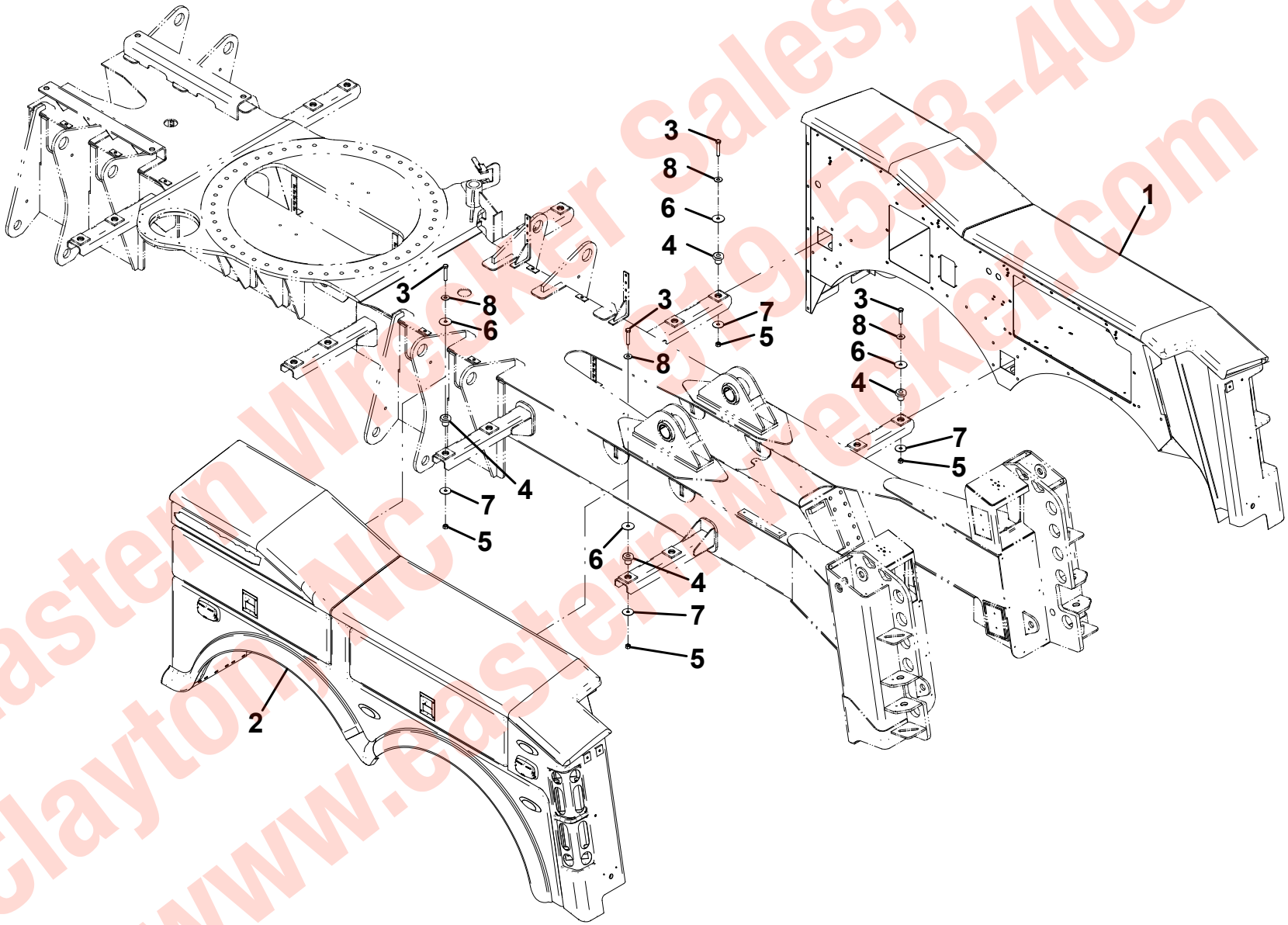


Eastern Wrecker Sales, Inc.
Clayton, NC 919-553-4038
www.easternwrecker.com

## MID BODY INSTALLATION

| ITEM | PART NO. | DESCRIPTION | QTY |
|---|---|---|---|
| 1 | 1001135897 | Body Assembly - Mid RH | 1 |
| 2 | 1001135896 | Body Assembly - Mid LH | 1 |
| 3 | 7115202850 | Capscrew, 0.63”-11NC x 3.50” | 8 |
| 4 | 7636000008 | Rubber Mount | 8 |
| 5 | 7660200001 | Nut, 0.63”-11NC | 8 |
| 6 | 7494000019 | Washer, Snub Head | 8 |
| 7 | 7949000020 | Washer, Snub Tail | 8 |
| 8 | 7950200161 | Flatwasher, 0.63” ID | 8 |
| 9 | 1001143119 | Plug, Hole | 2 |
| 10 | 8632000011 | Seal, Rubber “D” | 12ft |

Eastern Wrecker Sales, Inc.
919-553-4038
Clayton, NC
www.easternwrecker.com

## MID BODY INSTALLATION

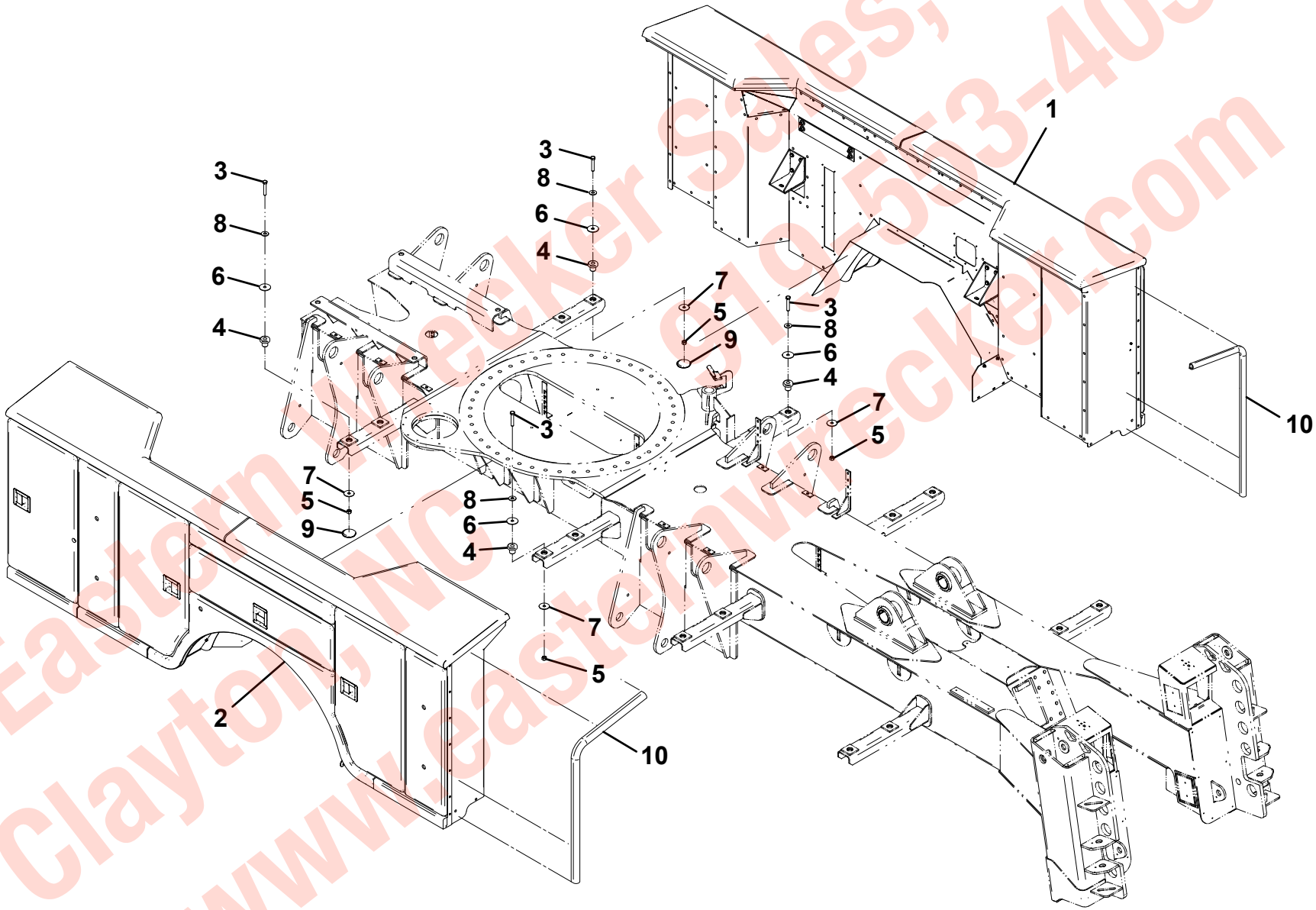


Eastern Wrecker Sales, Inc.
Clayton, NC 919-553-4038
www.easternwrecker.com

## BODY PANEL ASSEMBLY - REAR LH

| ITEM | PART NO. | DESCRIPTION | QTY |
|---|---|---|---|
| 1 | 1001136932 | Body Bonding Assembly - Rear LH | 1 |
| 2 | 4636000031 | Rubber Mount, 1.06 Dia. x 0.36” Thk | 18 |
| 3 | 4636000032 | Rubber Mount, 1.06 Dia. x 0.54” Thk | 10 |
| 4 | 4679000120 | Pad, Rubber - 0.12” Thk | 19 |
| 5 | 4679000122 | Pad, Rubber - 0.38” Thk | 5 |
| 6 | 4686000077 | Tandem Wheel Well Panel - LH | 1 |
| 7 | 4811000944 | Panel | 2 |
| 8 | 7189000015 | Bumper, 0.81” Dia x 0.13” Thk | 5 |
| 9 | 7686000016 | Logo Panel - LH | 1 |
| 10 | 7790141251 | Screw, Self Tapping - 0.25” Dia x 0.75” | 23 |
| 11 | 7790141651 | Screw, Self Tapping - 0.25” Dia x 1.00” | 23 |
| 12 | 7790142051 | Screw, Self Tapping - 0.25” Dia x 1.25” | 10 |
| 13 | 7949000022 | Washer, Fender - 1.00” OD x 0.25” ID | 31 |
| 14 | 7950140003 | Lockwasher, 0.25” ID | 8 |
| 15 | 7114140818 | Capscrew, 0.25”-20NC x 1.00” | 8 |
| 16 | 7413000002 | Nutsert, 0.25”-20NC | 8 |
| 17 | 7686000014 | Tail Light Panel - LH | 1 |
| 18 | 7686000018 | Rear Cap Panel - LH | 1 |
| 19 | 7686000041 | Front Cap Panel - LH | 1 |
| 20 | 7950140143 | Flatwasher, 0.25” ID | 8 |
| 21 | 7796000078 | Gasket | 1.9ft |

Eastern Wrecker Sales, Inc.
Clayton, NC
919-553-4038
www.easternwrecker.com

## BODY PANEL ASSEMBLY - REAR LH

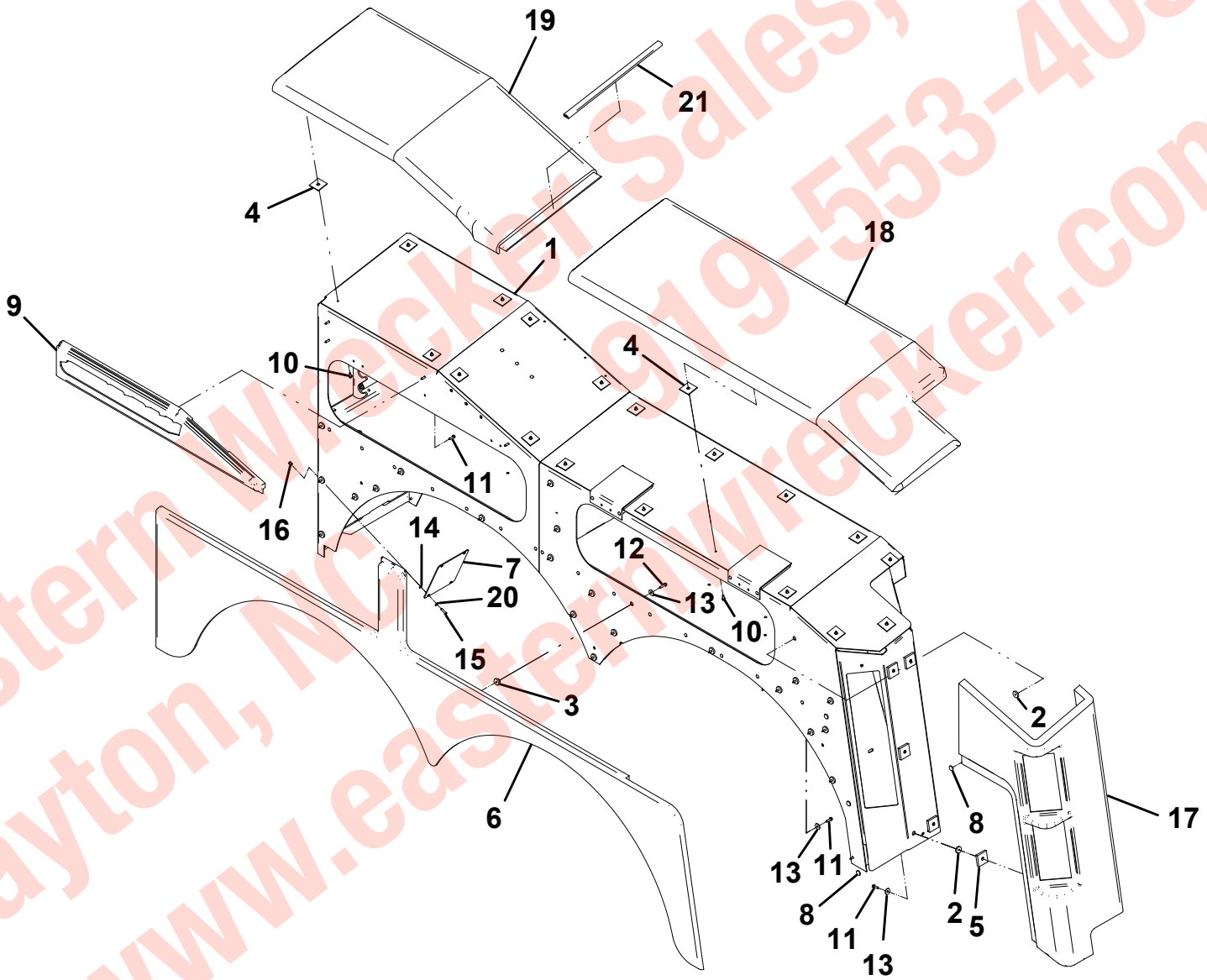


Eastern Wrecker Sales, Inc.
Clayton, NC 919-553-4038
www.easternwrecker.com

## BODY PANEL ASSEMBLY - REAR RH

| ITEM | PART NO. | DESCRIPTION | QTY |
|---|---|---|---|
| 1 | 1001136931 | Body Bonding Assembly - Rear RH | 1 |
| 2 | 1001137273 | Plate | 1 |
| 3 | 4636000031 | Rubber Mount, 1.06 Dia. x 0.36” Thk | 18 |
| 4 | 4636000032 | Rubber Mount, 1.06 Dia. x 0.54” Thk | 10 |
| 5 | 4679000120 | Pad, Rubber - 0.12” Thk | 19 |
| 6 | 4679000122 | Pad, Rubber - 0.38” Thk | 5 |
| 7 | 4811000944 | Panel | 2 |
| 8 | 4686000078 | Tandem Wheel Well Panel - RH | 1 |
| 9 | 7189000015 | Bumper, 0.81” Dia x 0.13” Thk | 5 |
| 10 | 7686000015 | Logo Panel - RH | 1 |
| 11 | 7790141251 | Screw, Self Tapping - 0.25” Dia x 0.75” | 23 |
| 12 | 7790141651 | Screw, Self Tapping - 0.25” Dia x 1.00” | 23 |
| 13 | 7790142051 | Screw, Self Tapping - 0.25” Dia x 1.25” | 10 |
| 14 | 7949000022 | Washer, Fender - 1.00” OD x 0.25” ID | 31 |
| 15 | 7950140003 | Lockwasher, 0.25” ID | 8 |
| 16 | 7114140818 | Capscrew, 0.25”-20NC x 1.00” | 8 |
| 17 | 7413000002 | Nutsert, 0.25”-20NC | 8 |
| 18 | 7686000013 | Tail Light Panel - RH | 1 |
| 19 | 7686000017 | Rear Cap Panel - RH | 1 |
| 20 | 7686000042 | Front Cap Panel - RH | 1 |
| 21 | 7790100856 | Screw, Self Tapping - #10 Dia x 0.50” | 4 |
| 22 | 7950140143 | Flatwasher, 0.25” ID | 8 |
| 23 | 7796000078 | Gasket | 1.9ft |

Eastern Wrecker Sales, Inc.
Clayton, NC 919-553-4038
www.easternwrecker.com

## BODY PANEL ASSEMBLY - REAR RH

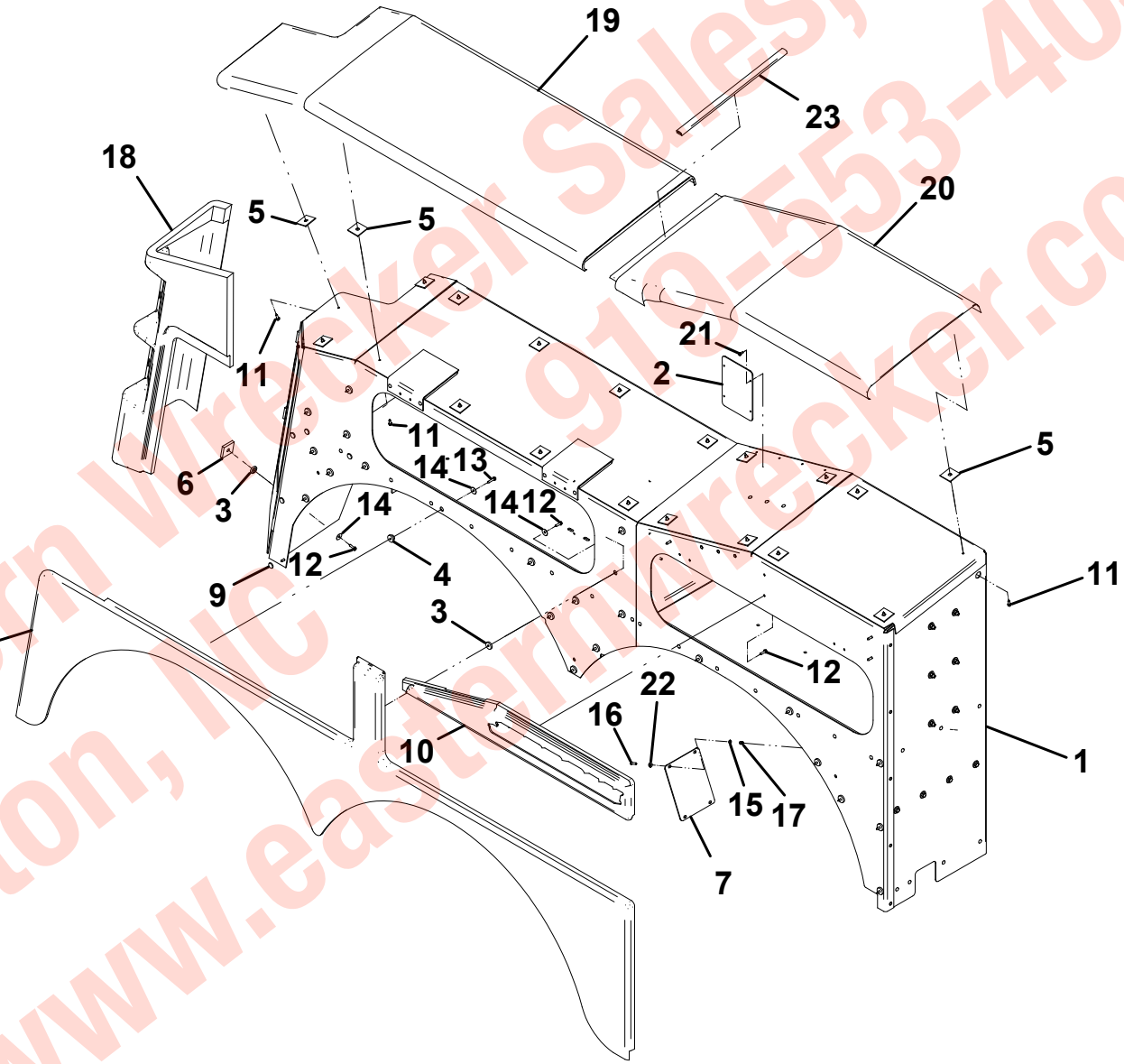


Eastern Wrecker Sales, Inc.
Clayton, NC 919-553-4038
www.easternwrecker.com

## BODY PANEL ASSEMBLY - MID LH

| ITEM | PART NO. | DESCRIPTION | QTY |
|---|---|---|---|
| 1 | 1001135971 | Panel | 1 |
| 2 | 1001133875 | Body Bonding Assembly - Mid LH | 1 |
| 3 | 4636000031 | Rubber Mount, 1.06 Dia. x 0.36” Thk | 12 |
| 4 | 4679000120 | Pad, Rubber - 0.12” Thk | 16 |
| | 4679000121 | Pad, Rubber - 0.25” Thk | |
| 5 | 7632046009 | Gasket | 9in |
| 6 | 4811000408 | Sheet | 2 |
| 7 | 7114140850 | Capscrew, 0.25”-20NC x 1.00” | 10 |
| 8 | 7660142604 | Locknut, 0.25”-20NC | 6 |
| 9 | 7686000019 | Filler Strip Panel | 3 |
| 10 | 7686000081 | Cap Panel | 1 |
| 11 | 7686000082 | Cap Panel | 1 |
| 12 | 7686000083 | Side Panel | 2 |
| 13 | 7686000084 | Fill Panel | 1 |
| 14 | 7686000086 | Lower Trim Panel | 1 |
| 15 | 7790141251 | Screw, Self Tapping - 0.25” Dia x 0.75” | 34 |
| 16 | 7790141651 | Screw, Self Tapping - 0.25” Dia x 1.00” | 21 |
| 17 | 7949000022 | Washer, Fender - 1.00” OD x 0.25” ID | 56 |
| 18 | 7950140003 | Lockwasher, 0.25” ID | 4 |
| 19 | 7413000002 | Nutsert, 0.25”-20NC | 4 |
| 20 | 7790100856 | Screw, Self Tapping - #10 Dia x 0.50” | 24 |
| 21 | 1001134078 | Bracket, Mid Body Mud Flap - LH | 1 |
| 22 | 1001134039 | Panel, Drive Motor Guard | 1 |
| 23 | 7950140163 | Flatwasher, 0.25” ID | 16 |

Eastern Wrecker Sales, Inc.
Clayton, NC 919-553-4038
www.easternwrecker.com

## BODY PANEL ASSEMBLY - MID LH

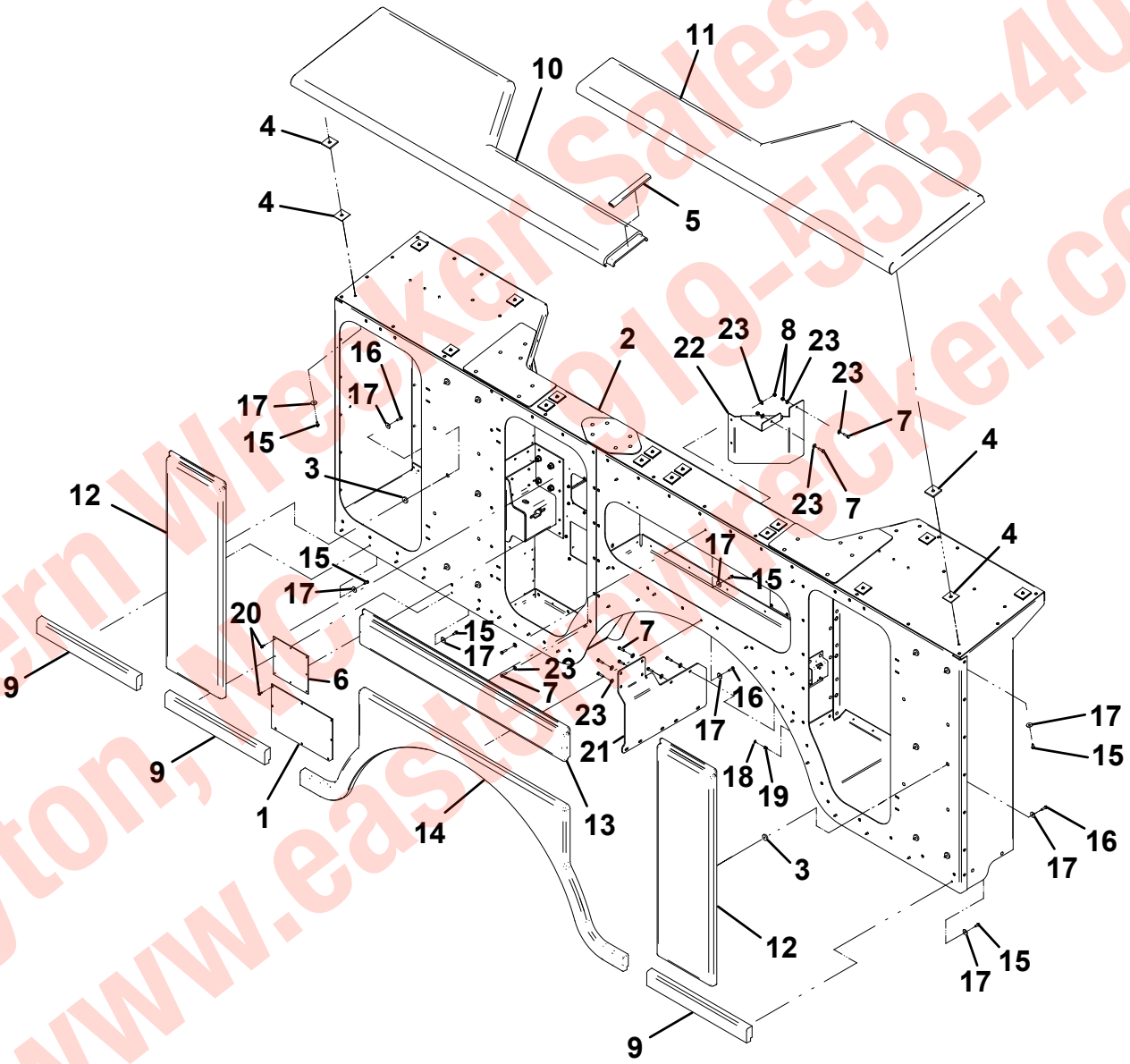


Eastern Wrecker Sales, Inc.
Clayton, NC 919-553-4038
www.easternwrecker.com

## BODY PANEL ASSEMBLY - MID RH

| ITEM | PART NO. | DESCRIPTION | QTY |
|---|---|---|---|
| 1 | 1001133876 | Body Bonding Assembly - Mid RH | 1 |
| 2 | 7686000081 | Cap Panel | 1 |
| 3 | 7686000085 | Side Panel - RH | 1 |
| 4 | 7686000082 | Cap Panel | 1 |
| 5 | 7686000083 | Side Panel | 1 |
| 6 | 7686000084 | Fill Panel | 1 |
| 7 | 7686000086 | Lower Trim Panel | 1 |
| 8 | 7686000019 | Filler Strip Panel | 3 |
| 9 | 7636000031 | Rubber Mount, 1.06 Dia. x 0.36” Thk | 11 |
| 10 | 4679000120 | Pad, Rubber - 0.12” Thk | 16 |
| | 4679000121 | Pad, Rubber - 0.25” Thk | |
| 11 | 7632046009 | Gasket | 9in |
| 12 | 7949000022 | Washer, Fender - 1.00” OD x 0.25” ID | 53 |
| 13 | 7790141251 | Screw, Self Tapping - 0.25” Dia x 0.75” | 33 |
| 14 | 7790141651 | Screw, Self Tapping - 0.25” Dia x 1.00” | 20 |
| 15 | 4811000408 | Sheet | 1 |
| 16 | 7790100856 | Screw, Self Tapping - #10 Dia x 0.50” | 18 |
| 17 | 4314000141 | Coverplate | 1 |
| 18 | 7950140003 | Bracket | 1 |
| 19 | 4706005490 | Plate | 1 |
| 20 | 7115181250 | Capscrew, 0.50”-13NC x 1.50” | 4 |
| 21 | 7950180161 | Flatwasher, 0.50” ID | 4 |
| 22 | 7660182601 | Locknut, 0.50”-13NC | 4 |
| 23 | 1001134095 | Bracket, Mid Body Mud Flap - RH | 1 |
| 24 | 7413000002 | Nutsert, 0.25”-20NC | 4 |
| 25 | 7950140163 | Flatwasher, 0.25” ID | 8 |
| 26 | 7950140003 | Lockwasher, 0.25” ID | 4 |
| 27 | 7114140850 | Capscrew, 0.25”-20NC x 1.00” | 6 |
| 28 | 7660142604 | Locknut, 0.25”-20NC | 2 |

Eastern Wrecker Sales, Inc.
Clayton, NC 919-553-4038
www.easternwrecker.com

## BODY PANEL ASSEMBLY - MID RH

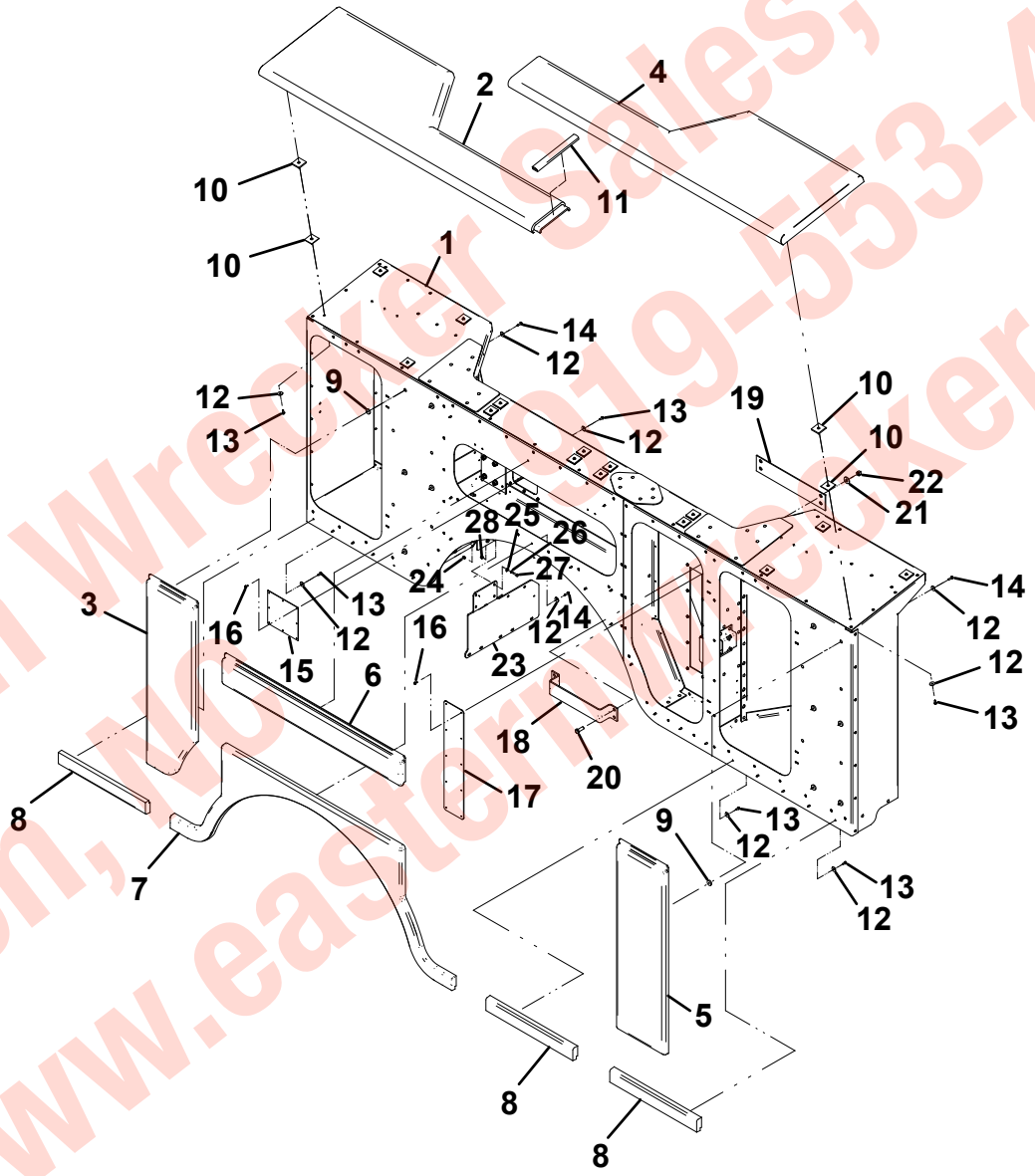


Eastern Wrecker Sales, Inc.
Clayton, NC 919-553-4038
www.easternwrecker.com

## BODY DOOR AND HARDWARE ASSEMBLY - REAR LH

| ITEM | PART NO. | DESCRIPTION | QTY |
|---|---|---|---|
| 1 | 1001136932 | Body Bonding Assembly - Rear LH | 1 |
| 2 | 3555000007 | Rear Hinge | 2 |
| 3 | 3555000008 | Front Hinge | 2 |
| 4 | 4062000174 | Bar | 2 |
| 5 | 4178000225 | Bracket | 2 |
| 6 | 4679000309 | Pad, Rubber | 1 |
| 7 | 4686000074 | Door Panel | 2 |
| 8 | 4632000013 | Seal, Horizontal Door | 2 |
| 9 | 7114100818 | Capscrew, #10-24NC x 1.00” | 8 |
| 10 | 7114100618 | Capscrew, #10-24NC x 0.75” | 12 |
| 11 | 7114140518 | Capscrew, 0.25”-24NC x 0.63” | 12 |
| 12 | 7114161050 | Capscrew, 0.38”-16NC x 1.00” | 4 |
| 13 | 7178000023 | Bracket, Ball Stud | 4 |
| 14 | 7585000009 | Latch Striker | 2 |
| 15 | 7595000005 | Latch, 2 Stage Rotary | 2 |
| 16 | 7660142604 | Locknut, 0.25”-20NC | 8 |
| 17 | 7660152604 | Locknut, 0.31”-18NC | 4 |
| 18 | 7660162604 | Locknut, 0.38”-16NC | 6 |
| 19 | 7796000038 | Gasket | 2 |
| 20 | 7865000001 | Ball Stud | 4 |
| 21 | 7949000074 | Lockwasher, Serrated - 11mm ID | 12 |
| 22 | 7114140650 | Capscrew, 0.25”-20NC x 0.75” | 8 |
| 23 | 7660102604 | Locknut, #10-24NC | 20 |
| 24 | 7950100153 | Flatwasher, 0.19” ID | 12 |
| 25 | 7950160163 | Flatwasher, 0.38” ID | 10 |
| 26 | 7843000022 | Gas Spring - 7.25” Stroke | 4 |
| 27 | 7950140163 | Flatwasher, 0.25” ID | 8 |

Eastern Wrecker Sales, Inc.
Clayton, NC 919-553-4038
www.easternwrecker.com

## BODY DOOR AND HARDWARE ASSEMBLY - REAR LH

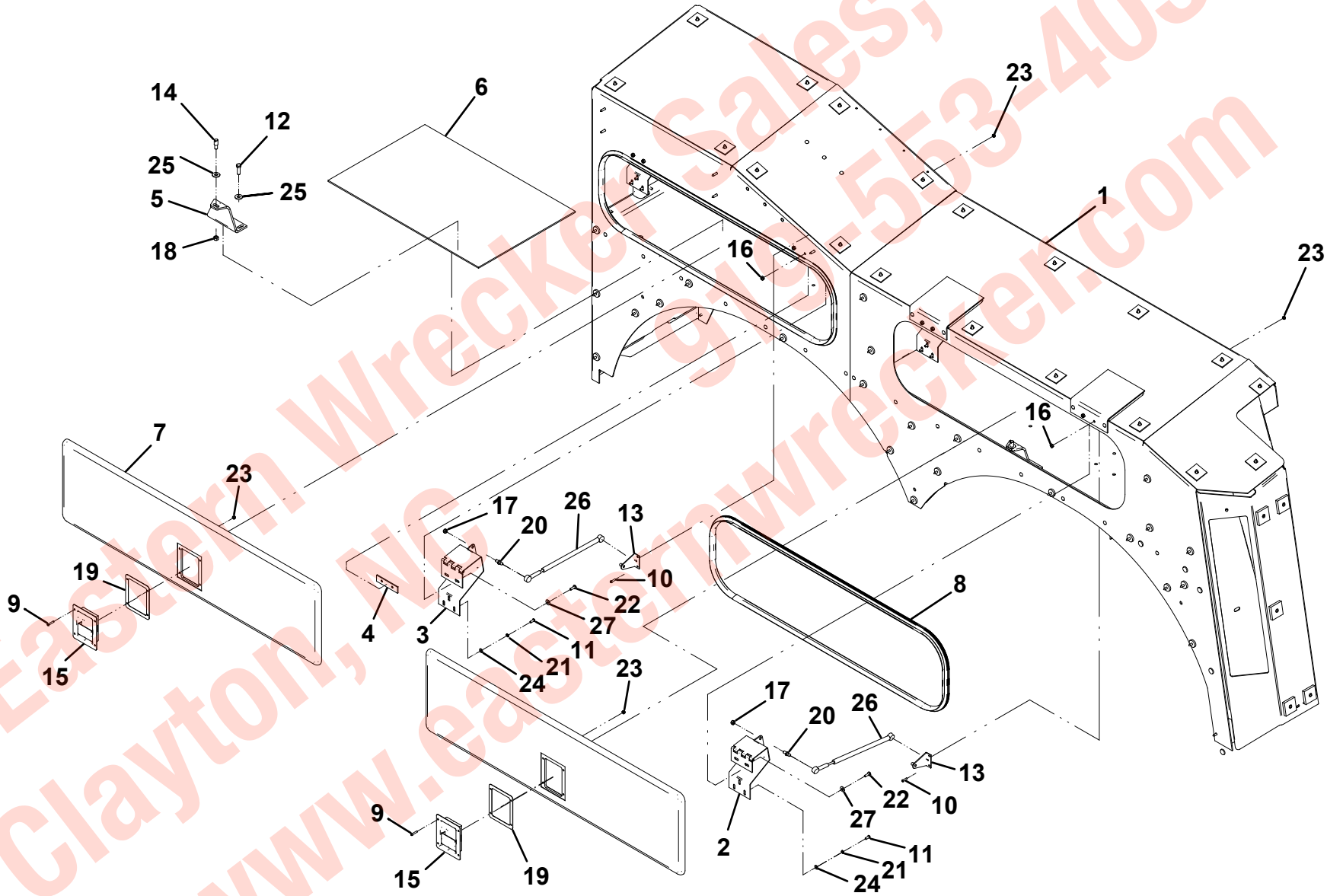


Eastern Wrecker Sales, Inc.
Clayton, NC 919-553-4038
www.easternwrecker.com

## BODY DOOR AND HARDWARE ASSEMBLY - REAR RH

| ITEM | PART NO. | DESCRIPTION | QTY |
|---|---|---|---|
| 1 | 1001136931 | Body Bonding Assembly - Rear RH | 1 |
| 2 | 3555000008 | Front Hinge | 2 |
| 3 | 4686000074 | Door Panel | 2 |
| 4 | 4062000174 | Bar | 2 |
| 5 | 3555000007 | Rear Hinge | 2 |
| 6 | 7950140163 | Flatwasher, 0.25” ID | 8 |
| 7 | 7114140650 | Capscrew, 0.25”-20NC x 0.75” | 8 |
| 8 | 7660142604 | Locknut, 0.25”-20NC | 8 |
| 9 | 7950100153 | Flatwasher, 0.19” ID | 12 |
| 10 | 7949000074 | Lockwasher, Serrated - 11mm ID | 12 |
| 11 | 7114140518 | Capscrew, 0.25”-24NC x 0.63” | 12 |
| 12 | 7796000038 | Gasket | 2 |
| 13 | 7595000005 | Latch, 2 Stage Rotary | 2 |
| 14 | 7114100818 | Capscrew, #10-24NC x 1.00” | 8 |
| 15 | 7660102604 | Locknut, #10-24NC | 20 |
| 16 | 4178000225 | Bracket | 2 |
| 17 | 7950160163 | Flatwasher, 0.38” ID | 10 |
| 18 | 7114161050 | Capscrew, 0.38”-16NC x 1.00” | 4 |
| 19 | 7660162604 | Locknut, 0.38”-16NC | 6 |
| 20 | 7585000009 | Latch Striker | 2 |
| 21 | 7865000001 | Ball Stud | 4 |
| 22 | 7660152604 | Locknut, 0.31”-18NC | 4 |
| 23 | 7178000023 | Bracket, Ball Stud | 4 |
| 24 | 7114100618 | Capscrew, #10-24NC x 0.75” | 12 |
| 25 | 4632000013 | Seal, Horizontal Door | 2 |
| 26 | 4679000310 | Pad, Rubber | 1 |
| 27 | 4679000311 | Pad, Rubber | 1 |
| 28 | 7843000022 | Gas Spring - 7.25” Stroke | 4 |

Eastern Wrecker Sales, Inc.
Clayton, NC
919-553-4038
www.easternwrecker.com

## BODY DOOR AND HARDWARE ASSEMBLY - REAR RH

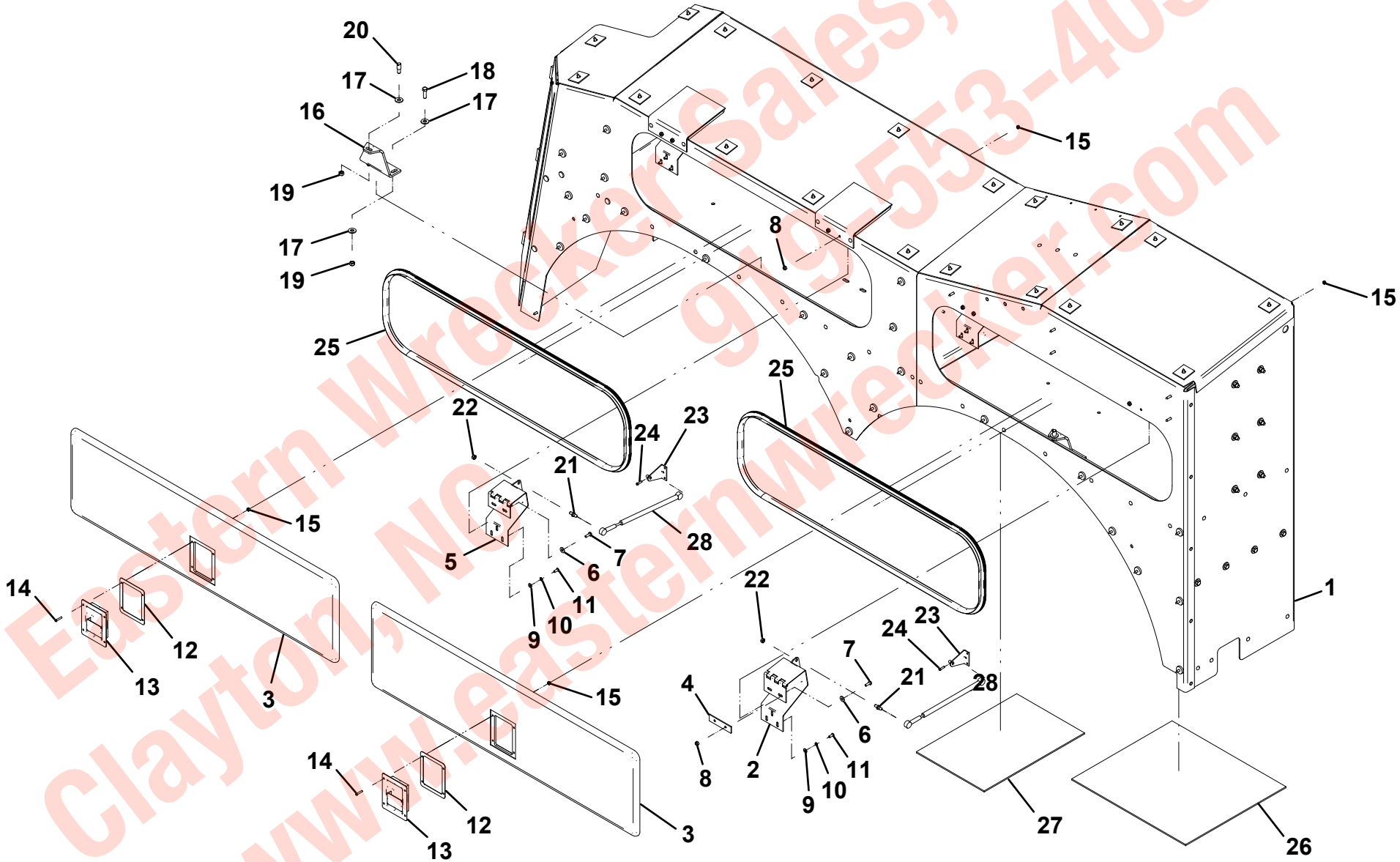


Eastern Wrecker Sales, Inc.
Clayton, NC 919-553-4038
www.easternwrecker.com

## BODY DOOR AND HARDWARE ASSEMBLY - MID LH

| ITEM | PART NO. | DESCRIPTION | QTY |
|---|---|---|---|
| 1 | 1001133875 | Body Bonding Assembly - Mid LH | 1 |
| 2 | 1001136908 | Pad, Rubber | 2 |
| 3 | 1001136909 | Pad, Rubber | 2 |
| 4 | 1001136910 | Pad, Rubber | 1 |
| 5 | 1001166916 | Pad, Rubber | 1 |
| 6 | 7950160163 | Flatwasher, 0.38” ID | 8 |
| 7 | 3555000008 | Front Hinge | 2 |
| 8 | 4062000173 | Bar | 4 |
| 9 | 4062000174 | Bar | 2 |
| 10 | 4062000624 | Bar | 2 |
| 11 | 4178000222 | Bracket | 2 |
| 12 | 4178000225 | Bracket | 1 |
| 13 | 4178000553 | Bracket | 3 |
| 14 | 4178000555 | Bracket - LH | 2 |
| 15 | 4178000556 | Bracket - RH | 2 |
| 16 | 4178000583 | Bracket - LH | 1 |
| 17 | 4178000854 | Bracket - RH | 1 |
| 18 | 4178000594 | Bracket | 1 |
| 19 | 4679000260 | Pad, Rubber | 1 |
| 20 | 4679000261 | Pad, Rubber | 1 |
| 21 | 4686000210 | Door Panel | 1 |
| 22 | 4686000212 | Door Panel - Mid LH | 1 |
| 23 | 4686000215 | Door Panel - Mid RH | 1 |
| 24 | 4706005393 | Plate | 1 |
| 25 | 4812000052 | Shim | 6 |
| 26 | 7114100618 | Capscrew, #10-24NC x 0.75” | 22 |
| 27 | 7114100518 | Capscrew, #10-24NC x 0.62” | 15 |
| 28 | 7114140518 | Capscrew, 0.25”-20NC x 0.62” | 24 |
| 29 | 7178000023 | Bracket, Ball Stud | 1 |
| 30 | 7555000002 | Hinge | 6 |
| 31 | 7950140163 | Flatwasher, 0.38” ID | 4 |
| 32 | 7585000009 | Latch Striker | 4 |
| 33 | 7595000005 | Latch, 2 Stage Rotary | 4 |
| 34 | 7660102604 | Locknut, #10-24NC | 22 |
| 35 | 7660152604 | Locknut, 0.31”-18NC | 14 |
| 36 | 7660162604 | Locknut, 0.38”-16NC | 4 |
| 37 | 7796000038 | Gasket | 4 |
| 38 | 7843000020 | Gas Spring - 6.00” Stroke | 4 |
| 39 | 4686000073 | Door Panel - RH | 1 |
| 40 | 7843000026 | Gas Spring - 5.50” Stroke | 1 |
| 41 | 7865000001 | Ball Stud | 9 |
| 42 | 7949000025 | Lockwasher, Serrated - 11mm ID | 24 |
| 43 | 7950150163 | Flatwasher, 0.31” ID | 40 |
| 44 | 7950100143 | Flatwasher, #10 ID | 21 |
| 45 | 7114140818 | Capscrew, 0.25”-20NC x 1.00” | 12 |
| 46 | 7114140650 | Capscrew, 0.25”-20NC x 0.75” | 4 |
| 47 | 7114140850 | Capscrew, 0.25”-20NC x 1.00” | 4 |
| 48 | 7114150850 | Capscrew, 0.31”-18NC x 1.00” | 6 |
| 49 | 7114161050 | Capscrew, 0.38”-16NC x 1.25” | 4 |
| 50 | 7413000002 | Nutsert, 0.25”-20NC | 4 |
| 51 | 7660142604 | Locknut, 0.25”-20NC | 16 |
| 52 | 7660162604 | Locknut, 0.38”-16NC | 4 |
| 53 | 7950140003 | Lockwasher, 0.25” ID | 4 |
| 54 | 7950140143 | Flatwasher, 0.25” ID | 6 |
| 55 | 7950140163 | Flatwasher, 0.25” ID | 50 |

Eastern Wrecker Sales, Inc.
Clayton, NC 919-553-4038
www.easternwrecker.com

## BODY DOOR AND HARDWARE ASSEMBLY - MID LH

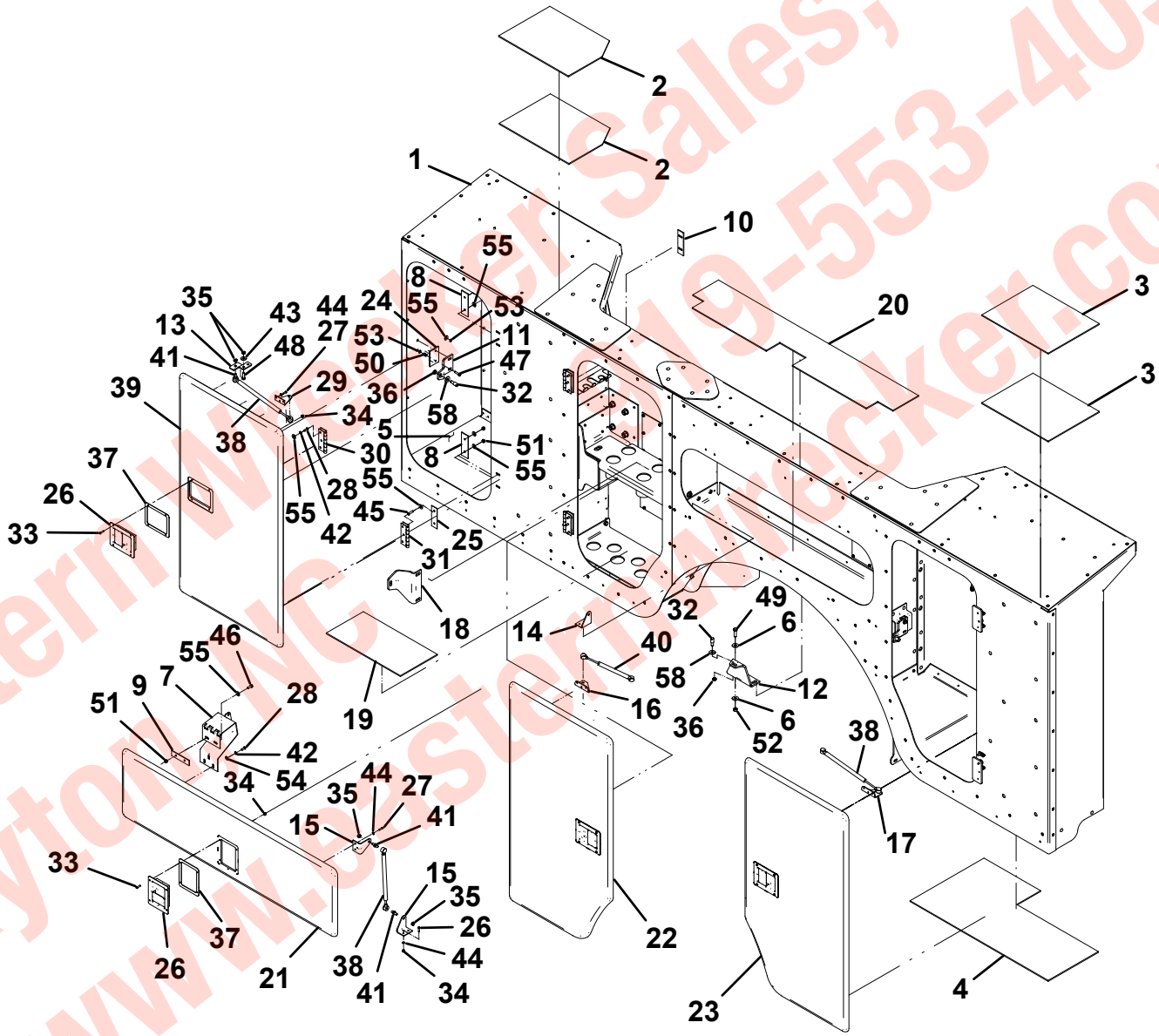


Eastern Wrecker Sales, Inc.
Clayton, NC 919-553-4038
www.easternwrecker.com

## BODY DOOR AND HARDWARE ASSEMBLY - MID RH

| ITEM | PART NO. | DESCRIPTION | QTY |
|---|---|---|---|
| 1 | 1001133876 | Body Bonding Assembly - Mid RH | 1 |
| 2 | 7555000002 | Hinge | 6 |
| 3 | 1001137001 | Pad, Rubber | 1 |
| 4 | 4062000174 | Bar | 2 |
| 5 | 3555000008 | Hinge | 2 |
| 6 | 4686000073 | Door Panel - RH | 2 |
| 7 | 4686000210 | Door Panel | 1 |
| 8 | 4686000215 | Door Panel - Mid RH | 1 |
| 9 | 4178000222 | Bracket | 2 |
| 10 | 7950140163 | Flatwasher, 0.25” ID | 50 |
| 11 | 7950140003 | Lockwasher | 4 |
| 12 | 7114140850 | Capscrew, 0.25”-20NC x 1.00” | 4 |
| 13 | 7413000002 | Nutsert, 0.25”-20NC | 4 |
| 14 | 7950160163 | Flatwasher, 0.38” ID | 4 |
| 15 | 7585000009 | Latch Striker | 4 |
| 16 | 7660162604 | Locknut, 0.38”-16NC | 8 |
| 17 | 4812000052 | Shim | 6 |
| 18 | 4062000173 | Bar | 4 |
| 19 | 7114140818 | Capscrew, 0.25”-20NC x 1.00” | 12 |
| 20 | 7949000074 | Lockwasher, Serrated - 11mm ID | 24 |
| 21 | 7114140518 | Capscrew, 0.25”-20NC x 0.62” | 24 |
| 22 | 7660142604 | Locknut, 0.25”-20NC | 16 |
| 23 | 7114140650 | Capscrew, 0.25”-20NC x 0.75” | 4 |
| 24 | 7950140143 | Flatwasher, 0.25” ID | 6 |
| 25 | 7595000005 | Latch, 2 Stage Rotary | 4 |
| 26 | 7114100618 | Capscrew, #10-24NC x 0.75” | 22 |
| 27 | 7660102604 | Locknut, #10-24NC | 22 |
| 28 | 4178000225 | Bracket | 1 |
| 29 | 7950160163 | Flatwasher, 0.38” ID | 8 |
| 30 | 7114161050 | Capscrew, 0.38”-16NC x 1.25” | 4 |
| 31 | 7660162601 | Locknut, 0.38”-16NC | 4 |
| 32 | 4178000564 | Bracket | 1 |
| 33 | 4706005393 | Plate | 1 |
| 34 | 4178000555 | Bracket - LH | 2 |
| 35 | 4178000556 | Bracket - RH | 2 |
| 36 | 4178000553 | Bracket | 3 |
| 37 | 4178000584 | Bracket - RH | 1 |
| 38 | 7865000001 | Ball Stud | 8 |
| 39 | 7660152604 | Locknut, 0.31”-18NC | 14 |
| 40 | 7950100143 | Flatwasher, #10 ID | 21 |
| 41 | 7114100518 | Capscrew, #10-24NC x 0.62” | 6 |
| 42 | 7114150850 | Capscrew, 0.31”-18NC x 1.00” | 6 |
| 43 | 7950151063 | Flatwasher, 0.31” ID | 6 |
| 44 | 7843000026 | Gas Spring - 5.50” Stroke | 1 |
| 45 | 1001136910 | Pad, Rubber | 1 |
| 46 | 7843000020 | Gas Spring - 6.00” Stroke | 4 |
| 47 | 1001136909 | Pad, Rubber | 2 |
| 48 | 4679000260 | Pad, Rubber | 1 |
| 49 | 4679000261 | Pad, Rubber | 1 |
| 50 | 7796000038 | Gasket | 4 |
| 51 | 7178000023 | Bracket, Ball Stud | 2 |
| 52 | 4062000624 | Bar | 2 |
| 53 | 1001136908 | Pad, Rubber | 2 |

Eastern Wrecker Sales, Inc.
Clayton, NC 919-553-1038
www.easternwrecker.com

## BODY DOOR AND HARDWARE ASSEMBLY - MID RH

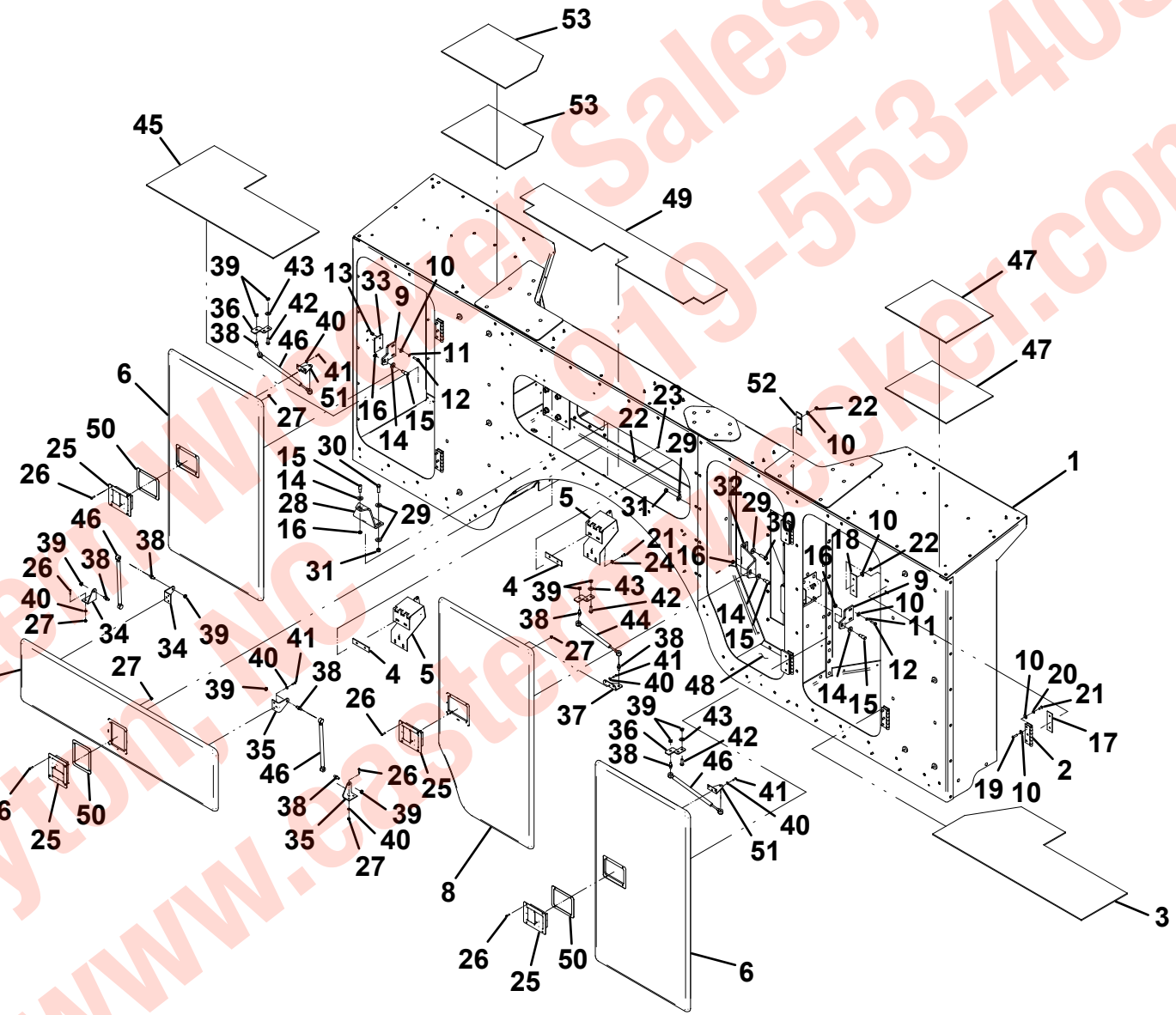


Eastern Wrecker Sales, Inc.
Clayton, NC 919-553-4038
www.easternwrecker.com

## 49” TUNNEL TOOL COMPARTMENT INSTALLATION

| ITEM | PART NO. | DESCRIPTION | QTY |
|---|---|---|---|
| 1 | 3911000068 | Mount, Tube Weldment | 1 |
| 2 | 3274000011 | Clamp Weldment | 8 |
| 3 | 7636000008 | Rubber Mount | 6 |
| 4 | 7949000019 | Washer, Snub Head | 24 |
| 5 | 7949000020 | Washer, Snub Tail | 6 |
| 6 | 7115202850 | Capscrew, 0.63”-11NC x 3.50” | 6 |
| 7 | 7590200161 | Flatwasher, 0.63” ID | 6 |
| 8 | 7660200001 | Nut, 0.63”-11NC | 6 |
| 9 | 7115182050 | Capscrew, 0.50”-13NC x 2.50” | 8 |
| 10 | 7660182301 | Locknut, 0.50”-13NC | 8 |
| 11 | 7950180252 | Flatwasher, 0.50” ID | 8 |
| 12 | 8632000011 | Seal, Rubber “D” | 12ft |
| 13 | 4705000705 | Plate | 8 |

Eastern Wrecker Sales, Inc.
Clayton, NC
919-553-4038
www.easternwrecker.com

## 49” TUNNEL TOOL COMPARTMENT INSTALLATION

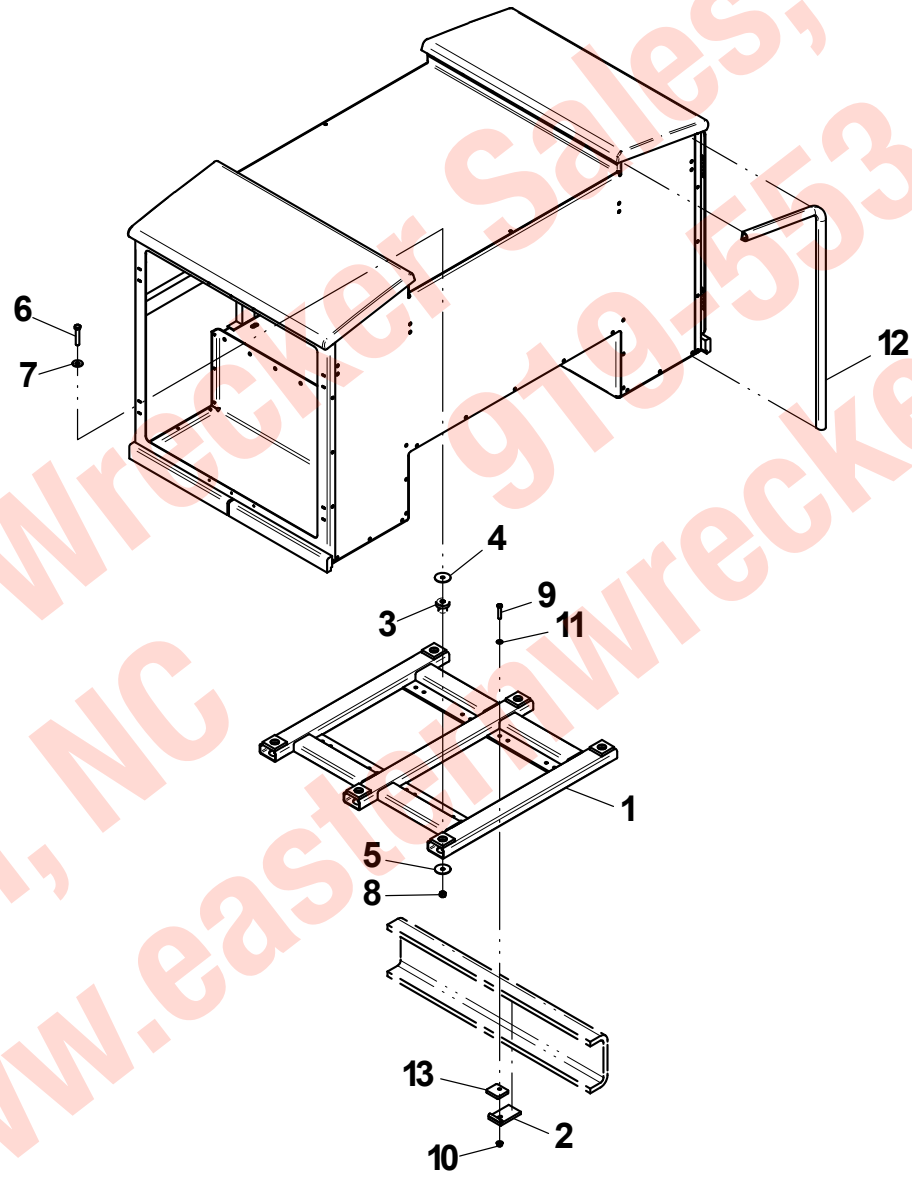


Eastern Wrecker Sales, Inc.
Clayton, NC 919-553-4038
www.easternwrecker.com

## 49” TUNNEL TOOL COMPARTMENT PANEL ASSEMBLY

| ITEM | PART NO. | DESCRIPTION | QTY |
|---|---|---|---|
| 1 | 3502740106 | Bonding Assembly | 1 |
| 2 | 7686000050 | Cap Panel | 2 |
| 3 | 7686000031 | Filler Strip Panel | 4 |
| 4 | 4679000120 | Pad, Rubber - .12” Thk | 12 |
| 5 | 7790141651 | Screw, Self Tapping - 0.25” Dia x 1.00” | 20 |

Eastern Wrecker Sales, Inc.
919-553-4038
Clayton, NC
www.easternwrecker.com

## 49” TUNNEL TOOL COMPARTMENT PANEL ASSEMBLY

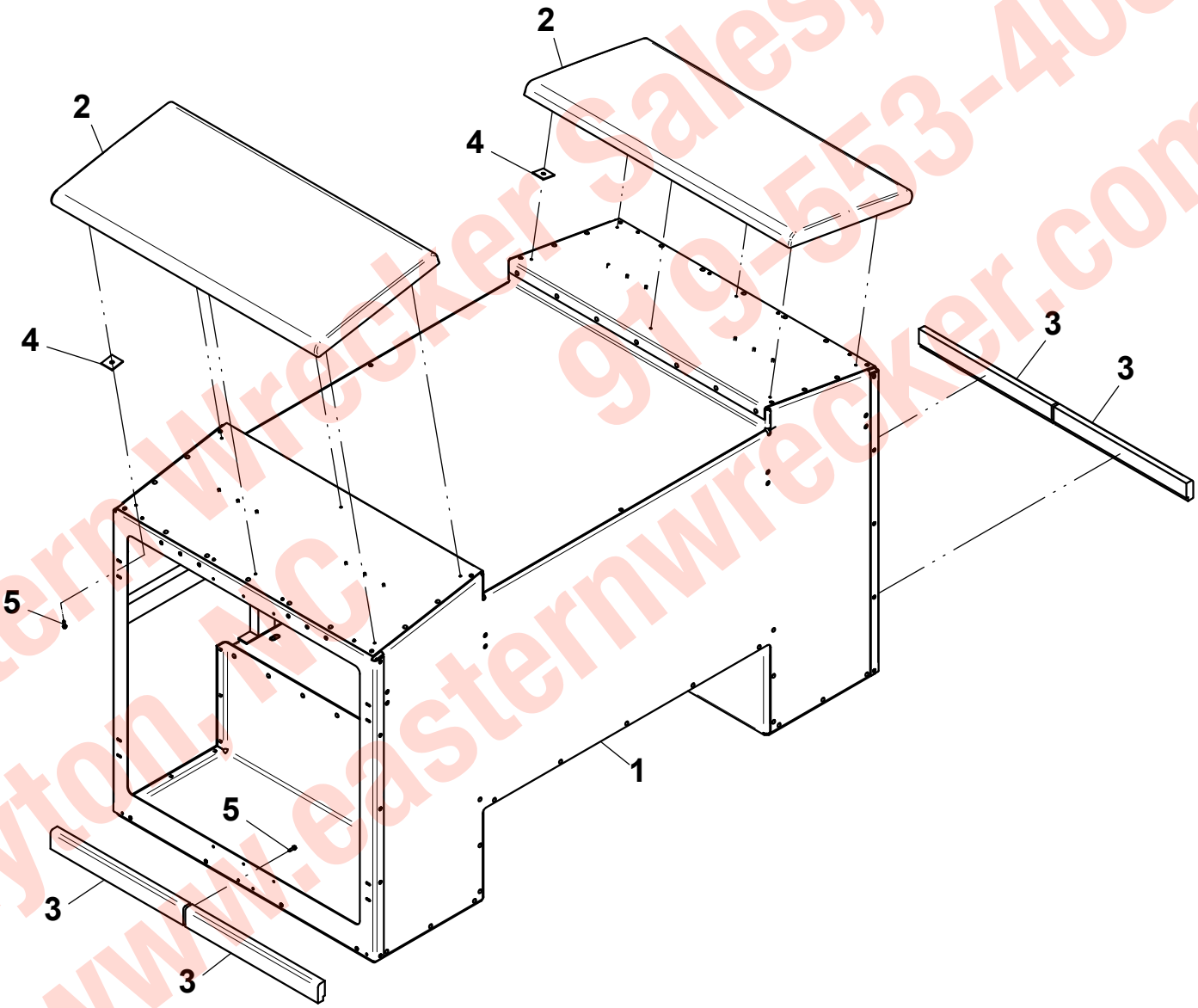


Eastern Wrecker Sales, Inc.
Clayton, NC
919-553-4038
www.easternwrecker.com

## 49” TUNNEL TOOL COMPARTMENT DOOR AND HARDWARE ASSEMBLY

| ITEM | PART NO. | DESCRIPTION | QTY |
|---|---|---|---|
| 1 | 4686000133 | Door Panel | 1 |
| 2 | 4632000025 | Seal, Vertical Door | 2 |
| 3 | 4811000355 | Sheet | 2 |
| 4 | 7555000002 | Hinge | 8 |
| 5 | 4812000052 | Shim | 16 |
| 6 | 7595000011 | Latch, “T” Handle | 4 |
| 7 | 7114100418 | Capscrew, #10-24NC x 0.50” | 28 |
| 8 | 7585000016 | Latch Roller | 8 |
| 9 | 4178000337 | Bracket | 8 |
| 10 | 7796000031 | Gasket | 4 |
| 11 | 7660152604 | Locknut, 0.31”-18NC | 12 |
| 12 | 7843000020 | Gas Spring - 6.00” Stroke | 4 |
| 13 | 7178000023 | Bracket, Ball Stud | 4 |
| 14 | 7865000001 | Ball Stud | 4 |
| 15 | 4178000240 | Bracket | 4 |
| 16 | 4811000335 | Sheet | 4 |
| 17 | 4632000024 | Seal, Vertical Door | 2 |
| 18 | 7114141018 | Capscrew, 0.25”-20NC x 1.25” | 28 |
| 19 | 7660142604 | Locknut, 0.25”-20NC | 16 |
| 20 | 7950140163 | Flatwasher, 0.25” ID | 56 |
| 21 | 4679000181 | Pad, Rubber | 2 |
| 22 | 4679000188 | Pad, Rubber | 2 |
| 23 | 7114100818 | Capscrew, #10-24NC x 1.00” | 16 |
| 24 | 7660102604 | Locknut, #10-24NC | 16 |
| 25 | 7114140418 | Capscrew, 0.25”-20NC x 0.50” | 24 |
| 26 | 7950140503 | Lockwasher, 0.25” ID | 24 |
| 27 | 7831000040 | Spacer | 8 |
| 28 | 4686000134 | Door Panel | 1 |
| 29 | 7114150650 | Capscrew, 0.31”-18NC x 0.75” | 8 |
| 30 | 4062000368 | Bar | 4 |
| 31 | 4811000336 | Sheet | 8 |
| 32 | 4811000337 | Sheet | 8 |
| 33 | 7660140001 | Nut, 0.25”-20NC | 12 |
| 34 | 4178000229 | Bracket | 4 |
| 35 | 7115181050 | Capscrew, 0.50”-13NC x 1.25” | 16 |
| 36 | 7950180153 | Flatwasher, 0.50” ID | 16 |
| 37 | 7660182301 | Locknut, 0.50”-13NC | 16 |
| 38 | 7690000810 | Pin, Cotter | 8 |
| 39 | 7189000015 | Bumper | 8 |

| ITEM | PART NO. | DESCRIPTION | QTY |
|---|---|---|---|
| 40 | 7114100318 | Capscrew, #10-24NC x 0.38” | 8 |
| 41 | 4686000185 | Door Panel | 1 |
| 42 | 4686000186 | Door Panel | 1 |
| 43 | 4811000947 | Sheet | 4 |

Eastern Wrecker Sales, Inc.
Clayton, NC
919-553-4038
www.easternwrecker.com

## 49” TUNNEL TOOL COMPARTMENT DOOR AND HARDWARE ASSEMBLY

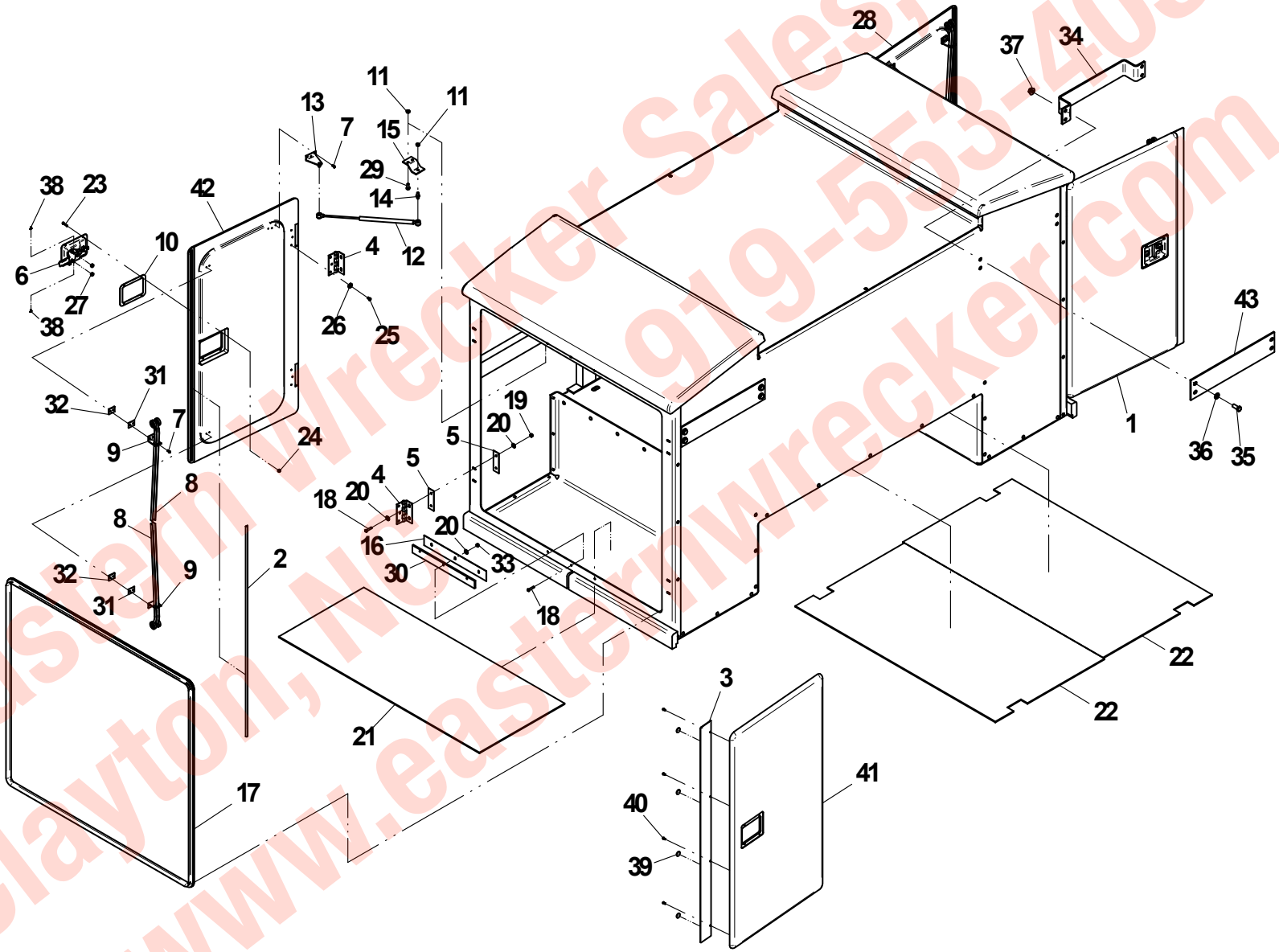


Eastern Wrecker Sales, Inc.
Clayton, NC 919-553-4038
www.easternwrecker.com

## 49” TUNNEL TOOL COMPARTMENT FENDER FLARE ASSEMBLY

| ITEM | PART NO. | DESCRIPTION | QTY |
|---|---|---|---|
| 1 | 4415000046 | Flare, Body | 2 |
| 2 | 7415000014 | Flare, Body Cap - LH | 2 |
| 3 | 7415000013 | Flare, Body Cap - RH | 2 |
| 4 | 7114141850 | Capscrew, 0.25”-20NC x 2.25” | 8 |
| 5 | 7970140151 | Flatwasher, 0.25” ID | 8 |
| 6 | 7660142604 | Locknut, 0.25”-20NC | 8 |

Eastern Wrecker Sales, Inc.
919-553-4038
Clayton, NC
www.easternwrecker.com

## 49” TUNNEL TOOL COMPARTMENT FENDER FLARE ASSEMBLY

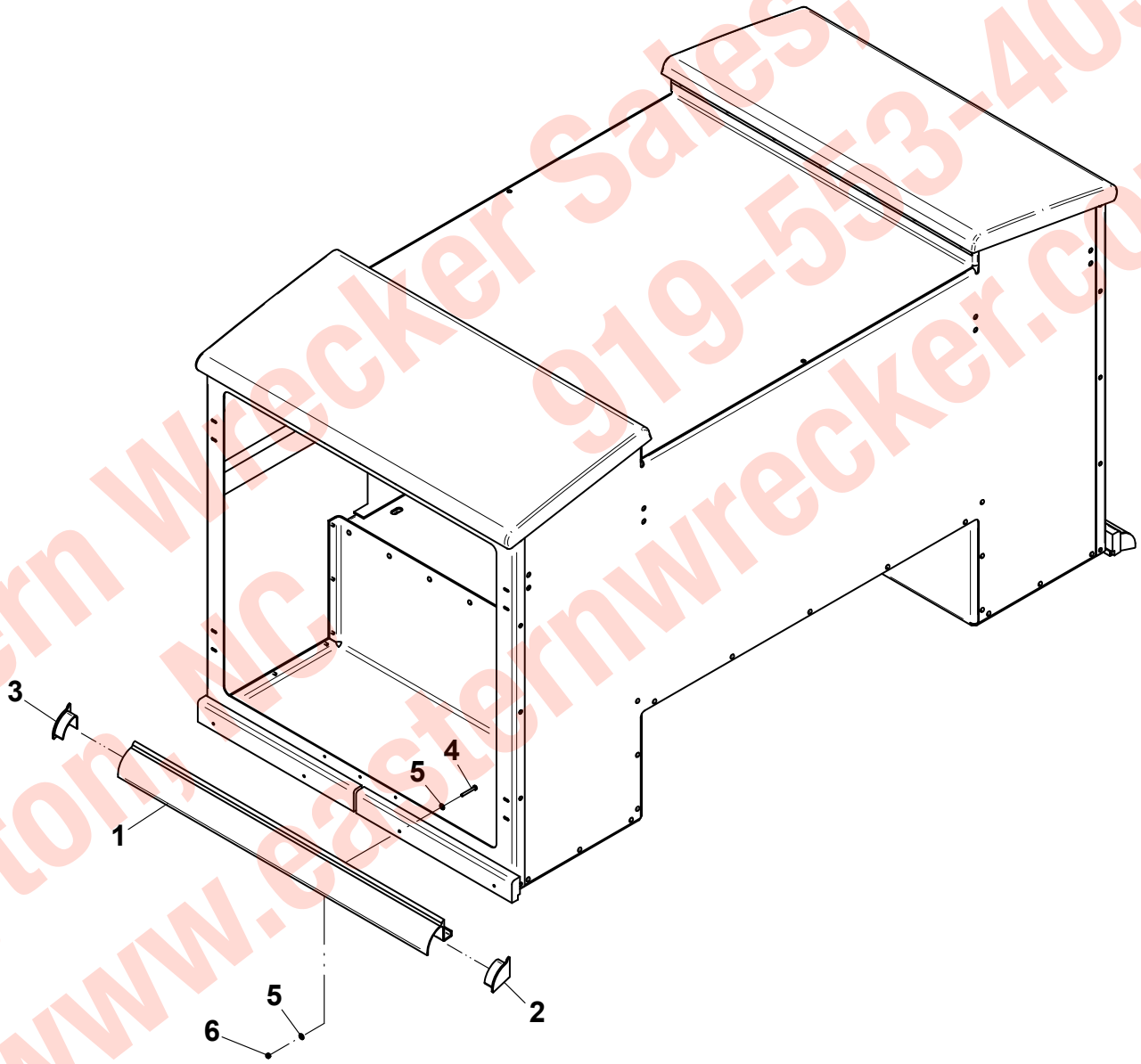


Eastern Wrecker Sales, Inc.
Clayton, NC 919-553-4038
www.easternwrecker.com

## FENDER FLARE INSTALLATION

| ITEM | PART NO. | DESCRIPTION | QTY |
|---|---|---|---|
| 1 | 1001137373 | Fender Flare, Body | 2 |
| 2 | 3415000047 | Wheelwell Flare - Lift Axle | 2 |
| 3 | 4415000053 | Fender Flare, Body | 2 |
| 4 | 4415000054 | Wheelwell Flare, Front - LH | 1 |
| | 4415000055 | Wheelwell Flare, Front - RH | 1 |
| 5 | 7415000010 | Junction, Flare | 2 |
| 6 | 4415000019 | Wheelwell Flare, Rear - LH | 1 |
| | 4415000017 | Wheelwell Flare, Rear - RH | 1 |
| 7 | 7415000013 | Flare, Body Cap - RH | 3 |
| 8 | 7415000014 | Flare, Body Cap - LH | 3 |
| 9 | 7415000032 | Fender, Inner | 24ft |
| 10 | 7790142051 | Screw, Self-Tapping - 0.25” Dia x 1.25” | 2 |
| 11 | 7949000022 | Washer, Fender | 24 |
| 12 | 4679000148 | Pad | 2 |
| 13 | 7111141050 | Capscrew, 0.25”-20NC x 1.25” | 22 |
| 14 | 7950140141 | Flatwasher, 0.25” ID | 96 |
| 15 | 7660142601 | Locknut, 0.25”-20NC | 58 |
| 16 | 7115141850 | Capscrew, 0.25”-20NC x 2.25” | 36 |
| 17 | 7790141056 | Screw, Self-Tapping - 0.25” Dia x 0.63” | 8 |
| 18 | 7280000020 | Wire Clip | 8 |

Eastern Wrecker Sales, Inc.
Clayton, NC
919-553-4038
www.easternwrecker.com

## FENDER FLARE INSTALLATION

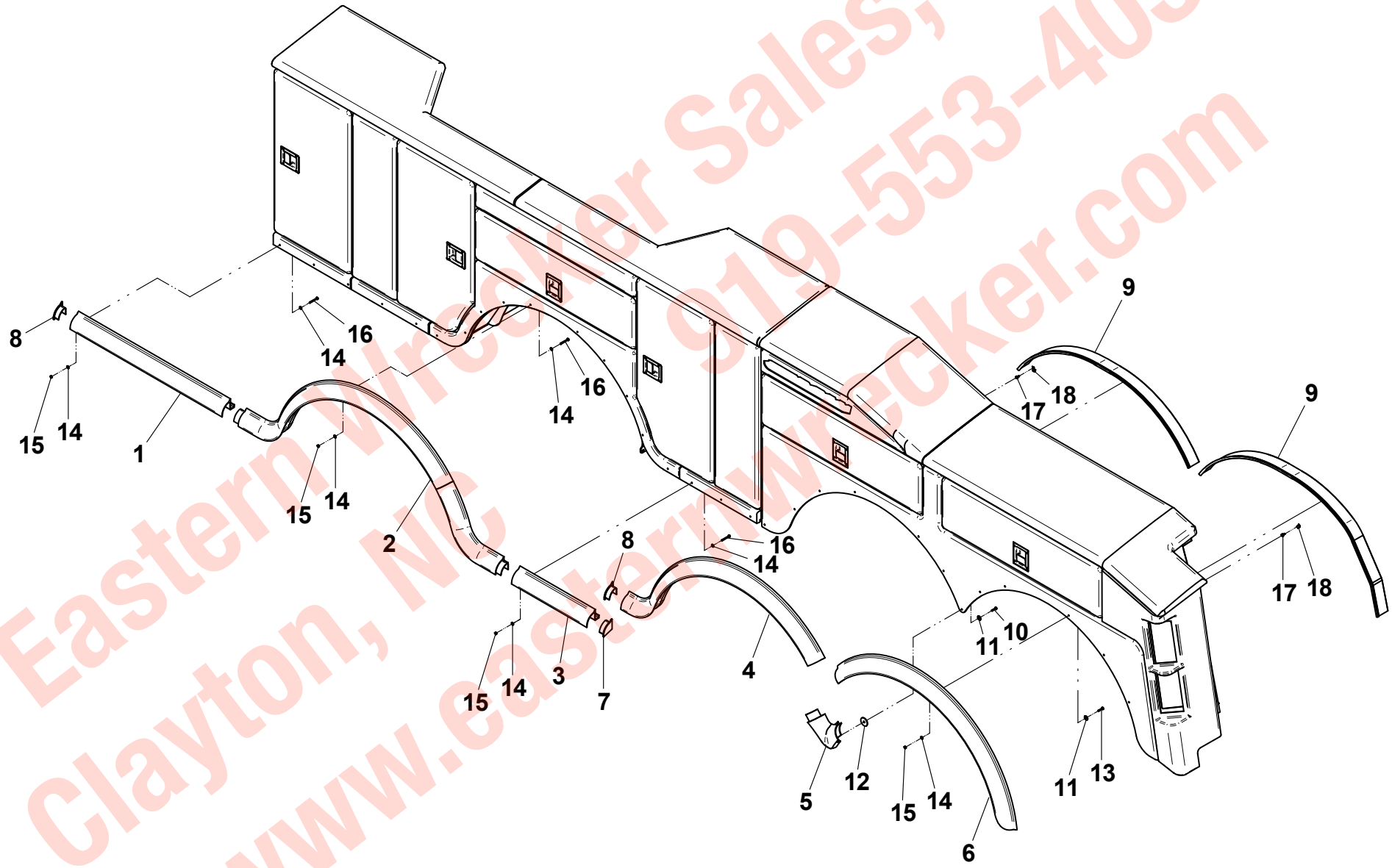


Eastern Wrecker Sales, Inc.
Clayton, NC 919-553-4038
www.easternwrecker.com

## MUDFLAP INSTALLATION

| ITEM | PART NO. | DESCRIPTION | QTY |
|---|---|---|---|
| 1 | 4178000242 | Bracket | 2 |
| 2 | 4178000661 | Bracket | 2 |
| 3 | 7118151250 | Capscrew, 0.31”-18NC x 1.50” | 36 |
| 4 | 7115150850 | Capscrew, 0.31”-18NC x 1.00” | 16 |
| 5 | 7660152601 | Locknut, 0.31”-18NC | 36 |
| 6 | 7950150161 | Flatwasher, 0.31” ID | 104 |
| 7 | 7638000012 | Mudflap | 6 |
| 8 | 4706001815 | Plate | 6 |
| 9 | 4017000719 | Angle | 6 |

Eastern Wrecker Sales, Inc.
919-553-4038
Clayton, NC
www.easternwrecker.com

## MUDFLAP INSTALLATION

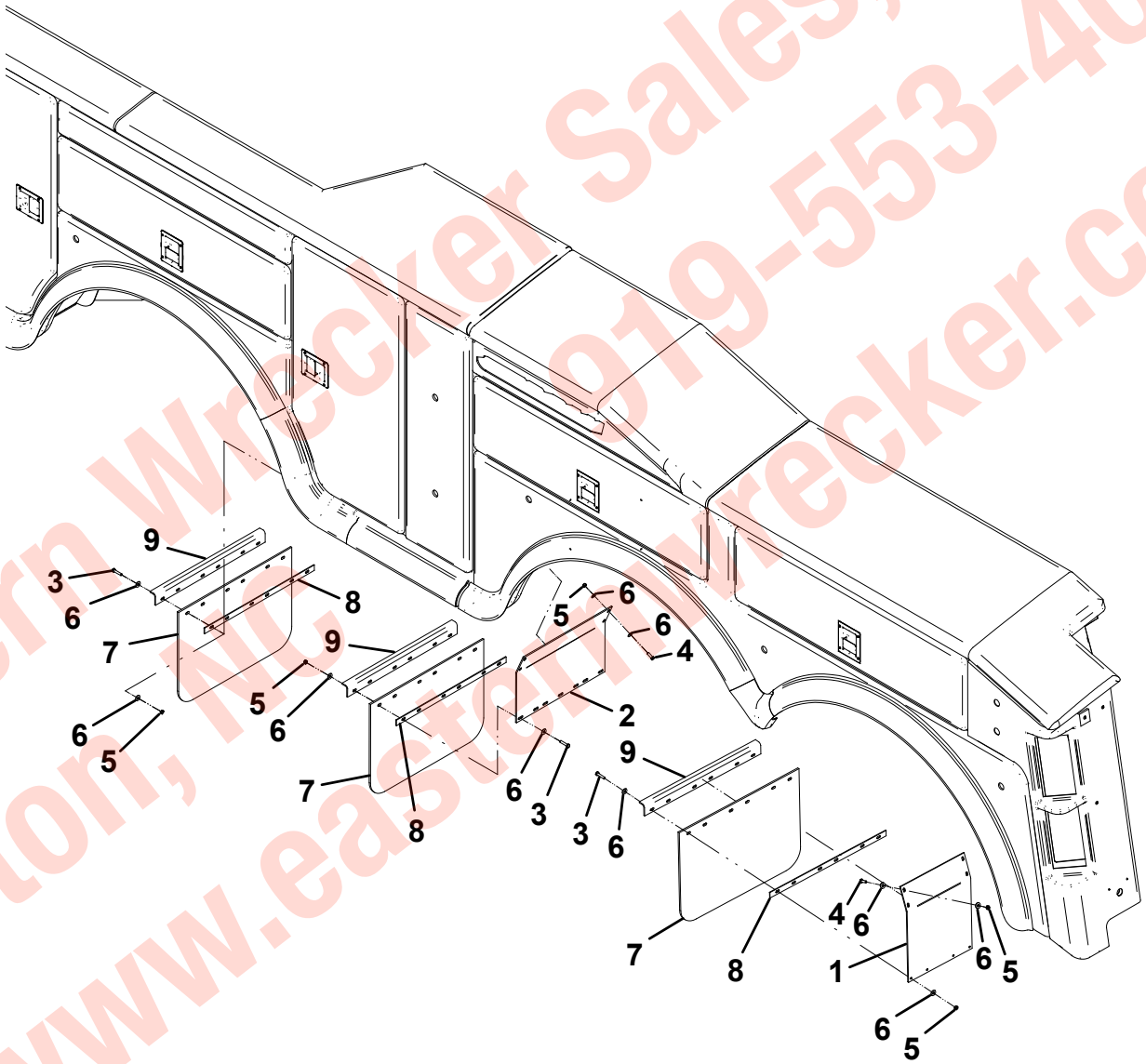


Eastern Wrecker Sales, Inc.
Clayton, NC 919-553-4038
www.easternwrecker.com

## TOOL HOLDER BRACKET INSTALLATION

| ITEM | PART NO. | DESCRIPTION | QTY |
|---|---|---|---|
| 1 | 4178000678 | Bracket | 2 |
| 2 | 4811001026 | Bracket | 1 |
| 3 | 4811001027 | Bracket | 1 |
| 4 | 7115160850 | Capscrew, 0.38”-16NC x 1.00” | 10 |
| 5 | 7413000003 | Nutsert, 0.38”-16NC | 10 |
| 6 | 7950160000 | Lockwasher, 0.38” ID | 10 |

Eastern Wrecker Sales, Inc.
919-553-4038
Clayton, NC
www.easternwrecker.com

## TOOL HOLDER BRACKET INSTALLATION

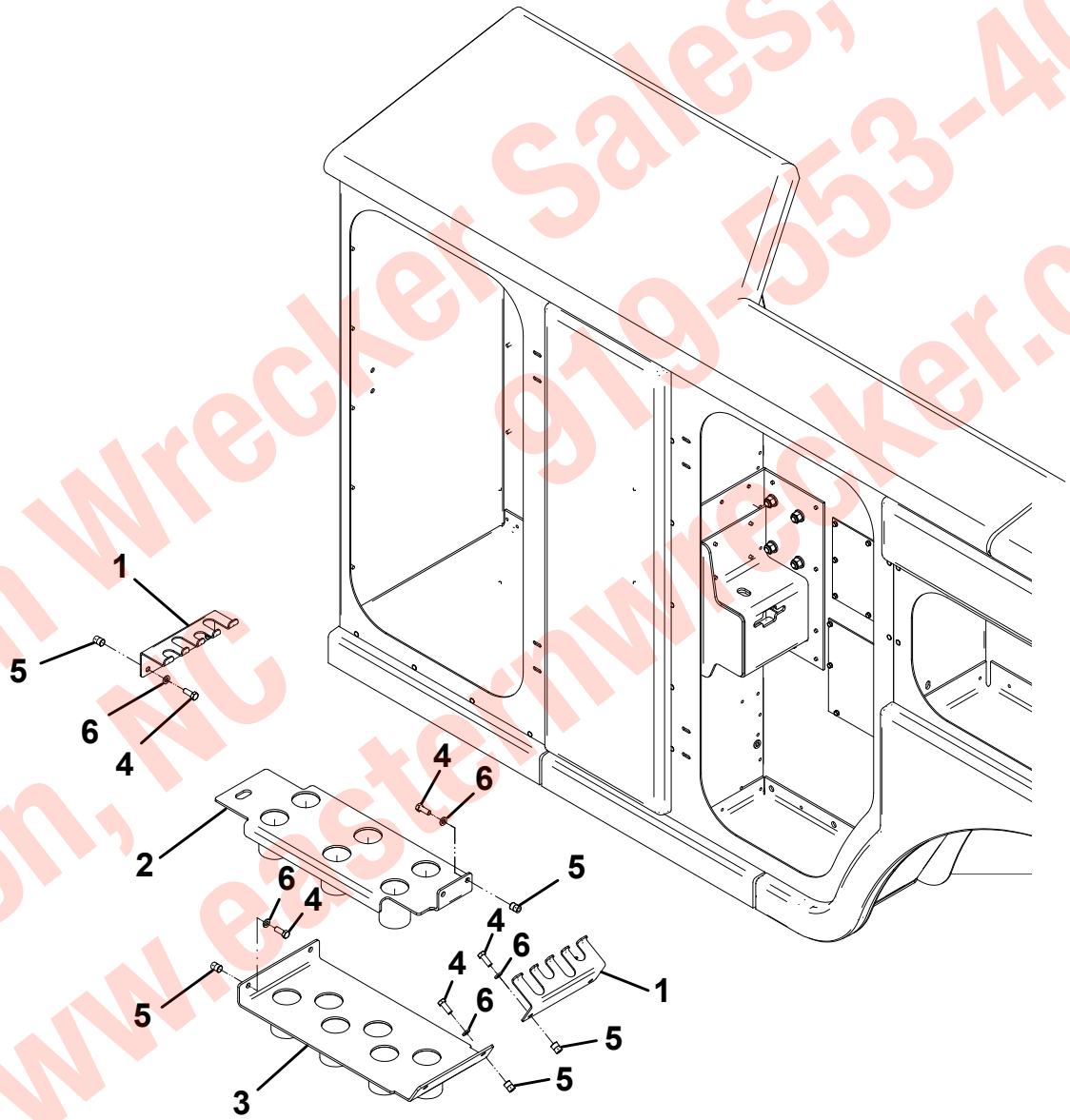


Eastern Wrecker Sales, Inc.
Clayton, NC 919-553-4038
www.easternwrecker.com

## 25K TIRE LIFT STORAGE BRACKETS FOR 49” TUNNEL TOOL COMPARTMENT

| ITEM | PART NO. | DESCRIPTION | QTY |
|---|---|---|---|
| 1 | 3178000460 | Bracket Assembly | 1 |
| 2 | 4178000660 | Bracket | 1 |
| 3 | 4017001493 | Angle | 1 |
| 4 | 7114140850 | Capscrew, 0.25”-20NC x 1.00” | 2 |
| 5 | 7950140163 | Flatwasher, 0.25” ID | 2 |
| 6 | 7413000002 | Nutsert, 0.25”-20NC | 2 |
| 7 | 7114161050 | Capscrew, 0.38”-16NC x 1.25” | 29 |
| 8 | 7950140163 | Flatwasher, 0.38” ID | 45 |
| 9 | 7413000003 | Nutsert, 0.38”-16NC | 25 |
| 10 | 7660162604 | Locknut, 0.38”-16NC | 10 |
| 11 | 7115161250 | Capscrew, 0.38”-16NC x 1.50” | 6 |
| 12 | 4062000615 | Bar | 2 |
| 13 | 4017001549 | Angle | 1 |
| 14 | 4178000715 | Bracket | 2 |
| 15 | 3178000513 | Bracket, Weldment | 1 |
| 16 | 4178000761 | Bracket | 1 |
| 17 | 4178000678 | Bracket | 1 |
| 18 | 4178000720 | Bracket | 1 |
| 19 | 7950160000 | Lockwasher, 0.38” ID | 25 |
| 20 | 7115181050 | Capscrew, 0.50”-13NC x 1.25” | 4 |
| 21 | 7950180153 | Flatwasher, 0.50” ID | 1 |
| 22 | 7660182301 | Locknut, 0.50”-13NC | 4 |

Eastern Wrecker Sales, Inc.
Clayton, NC 919-553-4038
www.easternwrecker.com

## 25K TIRE LIFT STORAGE BRACKETS FOR 49" TUNNEL TOOL COMPARTMENT

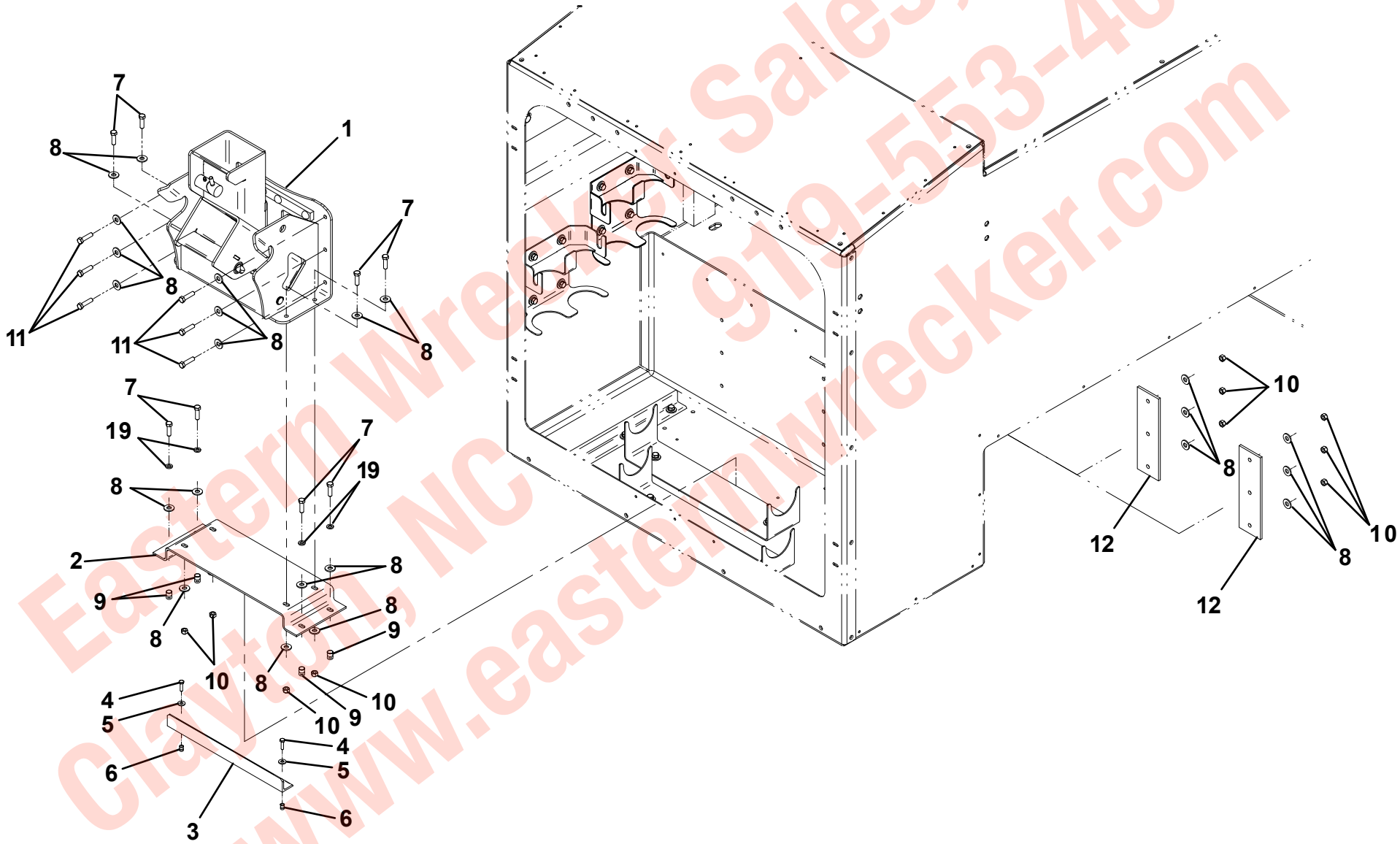


Eastern Wrecker Sales, Inc.
Clayton, NC 919-553-4038
www.easternwrecker.com

## 25K TIRE LIFT STORAGE BRACKETS FOR 49" TUNNEL TOOL COMPARTMENT

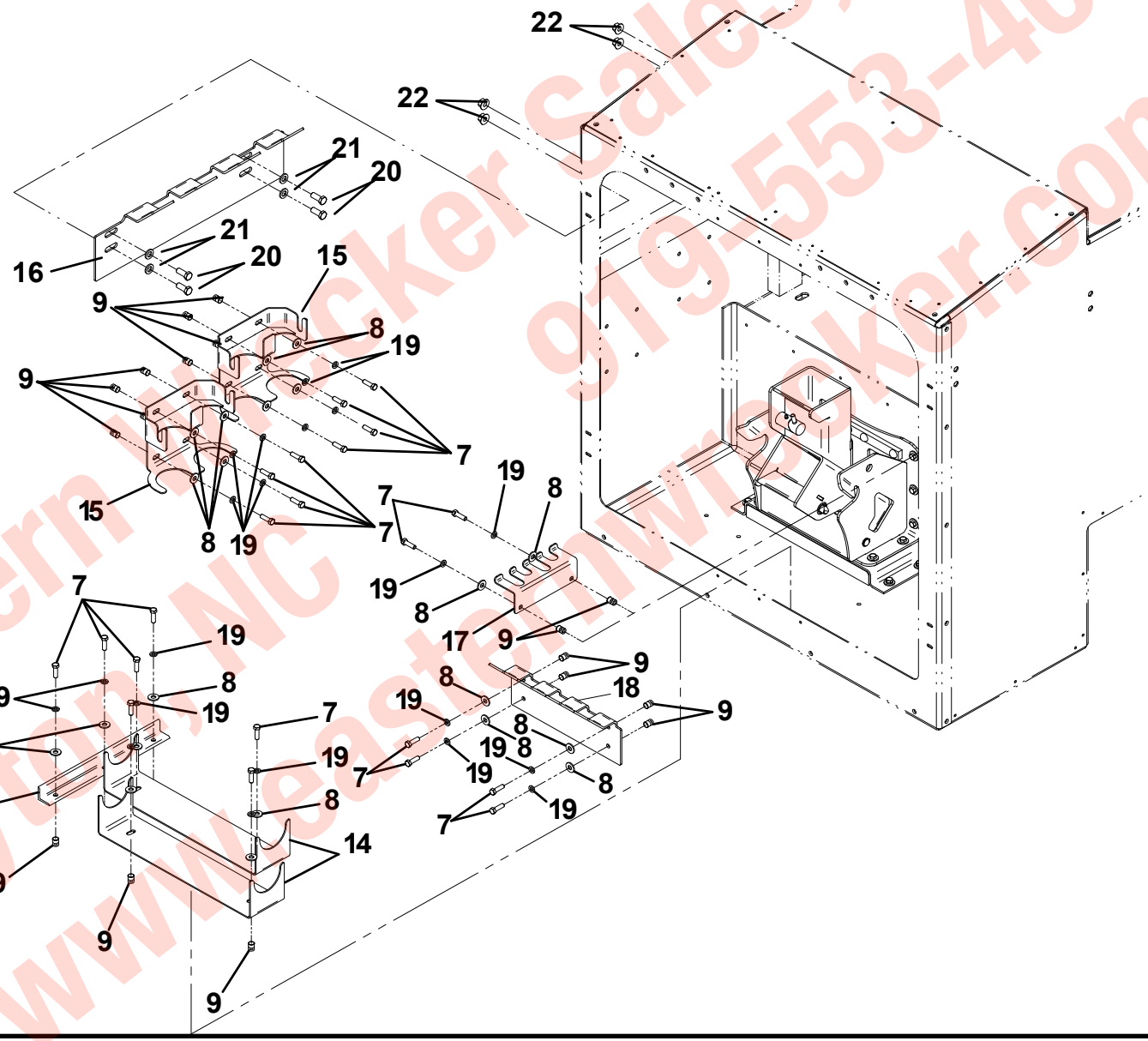


Eastern Wrecker Sales, Inc.
Clayton, NC 919-553-4038
www.easternwrecker.com

## 25K TIRE LIFT STORAGE BRACKETS FOR 49" TUNNEL TOOL COMPARTMENT

THIS PAGE INTENTIONALLY LEFT BLANK

Eastern Wrecker Sales, Inc.
919-553-4038
Clayton, NC
www.easternwrecker.com

## UNDER TOOL COMPARTMENT DRAWER INSTALLATION

| ITEM | PART NO. | DESCRIPTION | QTY |
|---|---|---|---|
| 1 | 7950160163 | Flatwasher, 0.38” ID | 44 |
| 2 | 4812000120 | Shim | 2 |
| 3 | 7114161250 | Capscrew, 0.38”-12NC x 1.00” | 22 |
| 4 | 7660162604 | Locknut, 0.38”-12NC | 22 |

Eastern Wrecker Sales, Inc.
919-553-4038
Clayton, NC
www.easternwrecker.com

## UNDER TOOL COMPARTMENT DRAWER INSTALLATION

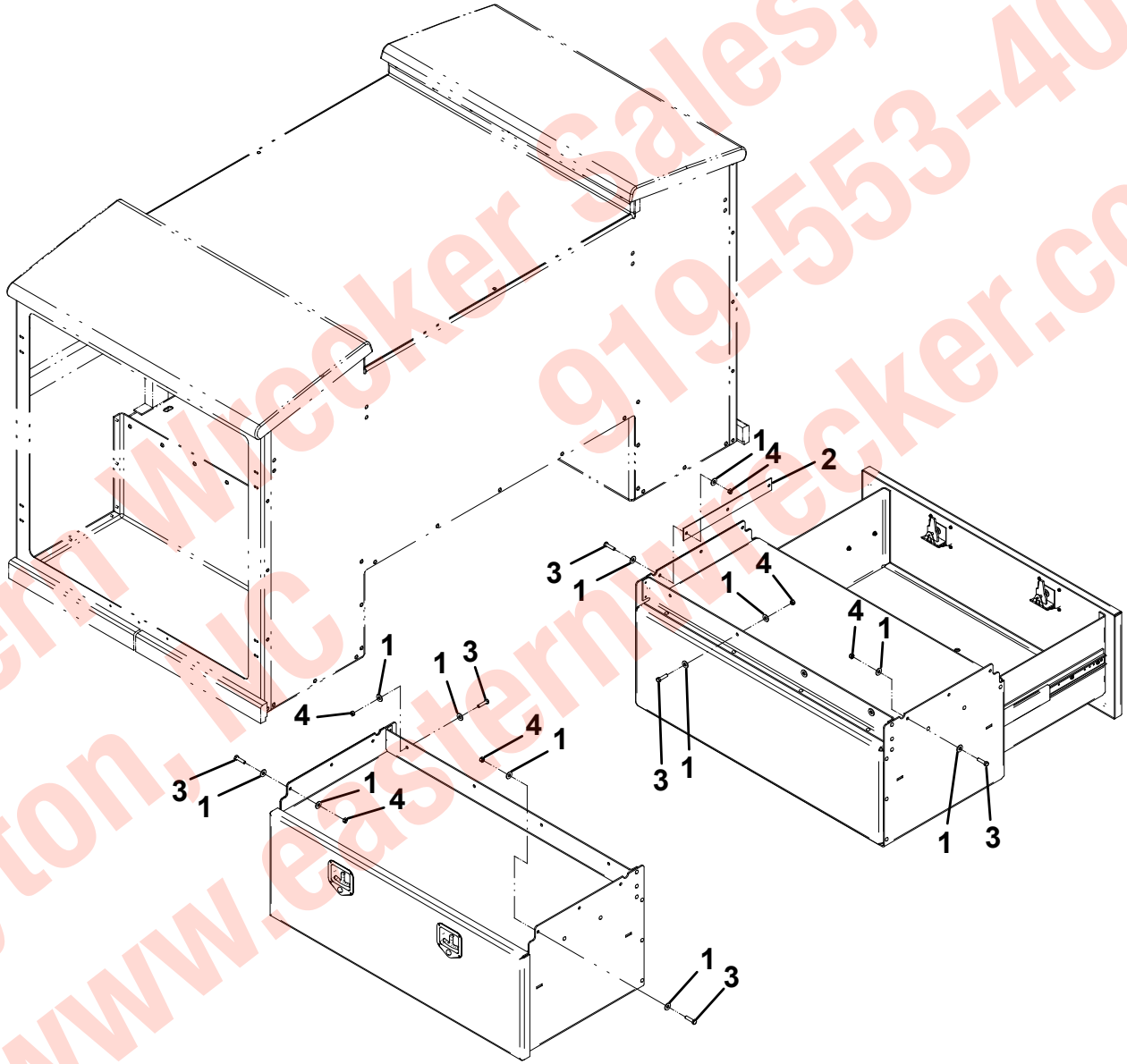


Eastern Wrecker Sales, Inc.
Clayton, NC 919-553-4038
www.easternwrecker.com

## UNDER TOOL COMPARTMENT DRAWER ASSEMBLY

| ITEM | PART NO. | DESCRIPTION | QTY |
|---|---|---|---|
| 1 | 3899000160 | Drawer Enclosure Bondment | 2 |
| 2 | 3899000161 | Drawer Bondment | 2 |
| 3 | 7796000099 | Seal | 20ft |
| 4 | 4679000320 | Pad, Rubber | 2 |
| 5 | 7114080418 | Capscrew, #8-32NC x 0.50” | 16 |
| 6 | 7114100818 | Capscrew, #10-24NC x 1.00” | 16 |
| 7 | 7114100518 | Capscrew, #10-24NC x 0.63” | 16 |
| 8 | 7585000012 | Latch, T-Handle | 4 |
| 9 | 7660082604 | Locknut, #8-32NC | 16 |
| 10 | 7796000084 | Gasket | 4 |
| 11 | 7821000003 | Slide | 4 |
| 12 | 7950100103 | Flatwasher, 0.19” ID | 32 |
| 13 | 7660102604 | Locknut, #10-24NC | 16 |

Eastern Wrecker Sales, Inc.
Clayton, NC
919-553-4038
www.easternwrecker.com

## UNDER TOOL COMPARTMENT DRAWER ASSEMBLY

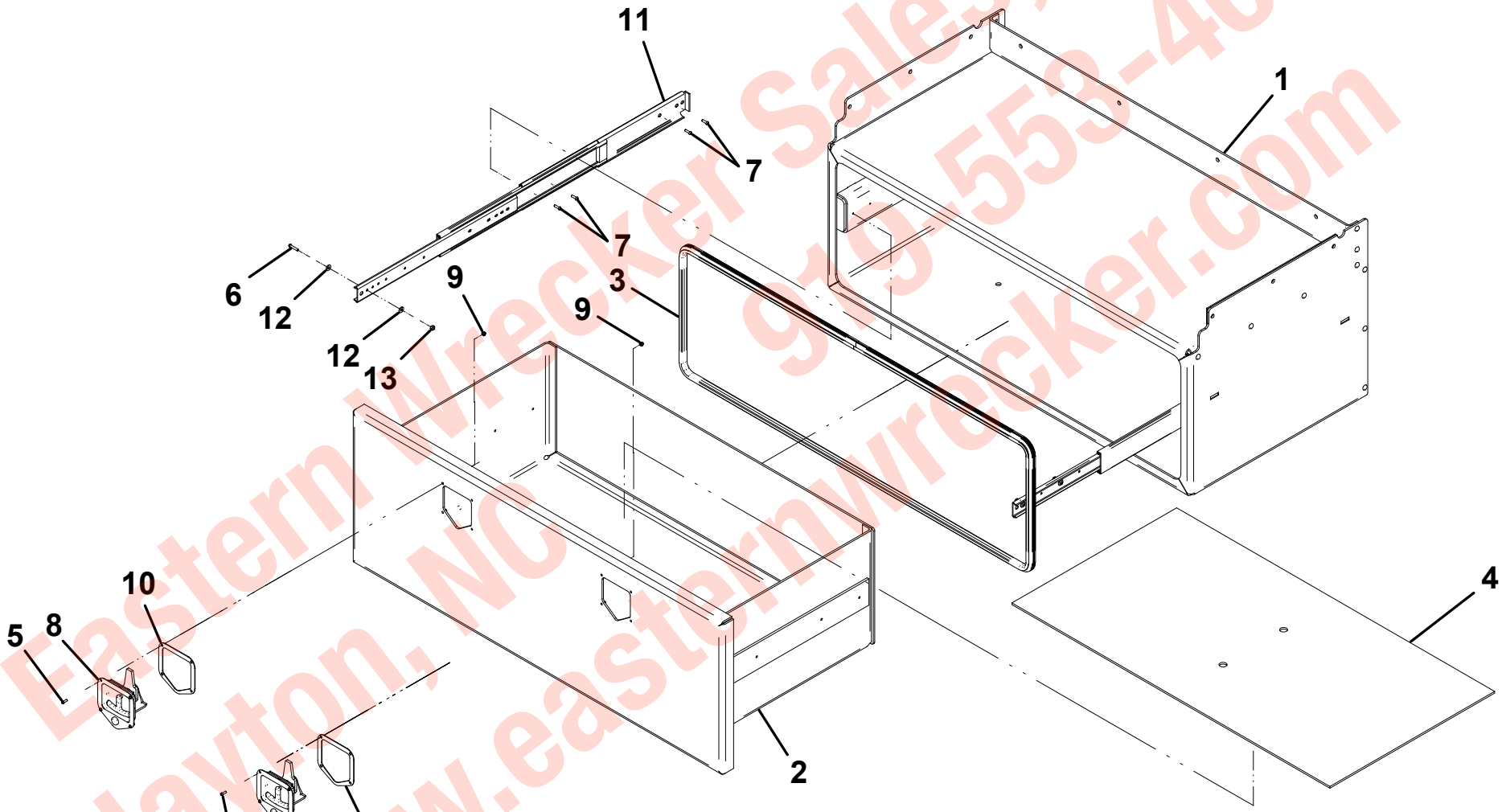


Eastern Wrecker Sales, Inc.
919-553-4038
Clayton, NC
www.easternwrecker.com

## BODY LIGHTING & WIRING INSTALLATION

| ITEM | PART NO. | DESCRIPTION | QTY |
|---|---|---|---|
| 1 | 1001137102 | Harness, LH Body | 1 |
| 2 | 1001142829 | Harness, RH Body | 1 |
| 3 | 7552000354 | Harness, LH Mid Body | 1 |
| 4 | 7552000349 | Harness, RH Mid Body | 1 |
| 5 | 7552000355 | Harness, Tunnel | 2 |
| 6 | 1001144150 | Harness, Swivel to Panel | 1 |
| 7 | 1001150426 | Harness, Headboard | 1 |
| 8 | 1001144017 | Harness, Battery to Dist. Panel | 1 |
| 9 | 7978000011 | Cable | 30ft |
| 10 | 8597650001 | Loom | 30ft |
| 11 | 7870000043 | Switch Breaker, 150 Amp | 1 |
| 12 | 7115140650 | Capscrew, 0.25”-20NC x 0.75” | 6 |
| 13 | 7950140141 | Flatwasher, 0.25” ID | 6 |
| 14 | 7660142601 | Locknut, 0.25”-20NC | 6 |
| 15 | 7345222202 | Terminal | 2 |
| 16 | 7346000045 | Tubing | 0.25ft |
| 17 | 7345242202 | Terminal | 1 |
| 18 | 7345232202 | Terminal | 1 |
| 19 | 7115150650 | Capscrew, 0.31”-18NC x 0.75” | 1 |
| 20 | 7950150000 | Flatwasher, 0.31” ID | 1 |
| 21 | 7950150161 | Flatwasher, 0.31” ID | 1 |
| 22 | 7493000014 | Grommet | 10 |
| 23 | 7493000011 | Grommet | 2 |
| 24 | 1001143543 | Junction Box, Electrical | 1 |
| 25 | 7120000033 | Screw, #10-32NF | 4 |
| 26 | 7115101411 | Screw, #10-24NC x 1.75” | 4 |
| 27 | 7661000002 | Locknut, #10-24NC | 12 |
| 28 | 7870000123 | Power Panel Distribution | 1 |
| 29 | 7590000094 | Light | 18 |
| 30 | 7790100856 | Screw, #10 x 0.50” | 72 |
| 31 | 7590000105 | Light, License Plate | 1 |
| 32 | 7740000001 | Relay, 40 Amp | 13 |
| 33 | 7457000023 | Fuse, 20 Amp | 3 |
| 34 | 7457000019 | Fuse, 5 Amp | 13 |
| 35 | 7457000011 | Fuse, 10 Amp | 4 |
| 36 | 7457000006 | Fuse, 15 Amp | 1 |
| 37 | 7457000012 | Fuse, 20 Amp | 3 |
| 38 | 7120000035 | Capscrew, 0.31”-18NC x 0.50” | 1 |
| 39 | 7949000053 | Washer, 0.31” ID | 1 |
| 40 | 7661000023 | Locknut, #10-32NF | 16 |
| 41 | 7346000039 | Tube | 2 |
| 42 | 7178000025 | Bracket | 1 |
| 43 | 7894000042 | Tie Strap | 50 |
| 44 | 7894000031 | Cable Tie | 25 |
| 45 | 7894000010 | Tie Strap | 25 |
| 46 | 1001143276 | Harness, LH Mid Body Markers | 1 |
| 47 | 1001143289 | Harness, RH Mid Body Markers | 1 |
| 48 | 1001143286 | Harness, Body Flashers Mid Body | 2 |
| 49 | 1001143287 | Harness, RH Rear Body Flashers | 1 |
| 50 | 1001143288 | Harness, LH Rear Body Flashers | 1 |
| 51 | 7870000143 | Switch | 2 |
| 52 | 1001134451 | Decal | 2 |
| 53 | 7590000284 | Light | 6 |
| 54 | 7590000317 | Light | 2 |
| 55 | 7590000304 | Light | 8 |
| 56 | 7493000026 | Grommet | 8 |
| 57 | 7740000008 | Relay | 1 |
| 58 | 1001144012 | Harness, Relay To Power Panel | 2 |
| 59 | 7114100618 | Capscrew, #10-24NC x 0.75” | 1 |
| 60 | 7660102601 | Nut, #10-24NC | 1 |
| 61 | 7590000262 | Light | 14 |
| 62 | 7114080418 | Capscrew, #8-32NC x 0.50” | 8 |
| 63 | 7660082604 | Locknut, #8-32NC | 8 |
| 64 | 1001143284 | Light | 8 |
| 65 | 7590000282 | Light | 4 |
| 66 | 7790100856 | Screw, #10 x 0.50” | 28 |

Eastern Wrecker Sales, Inc.
Clayton, NC 919-553-4038
www.easternwrecker.com

## BODY LIGHTING & WIRING INSTALLATION

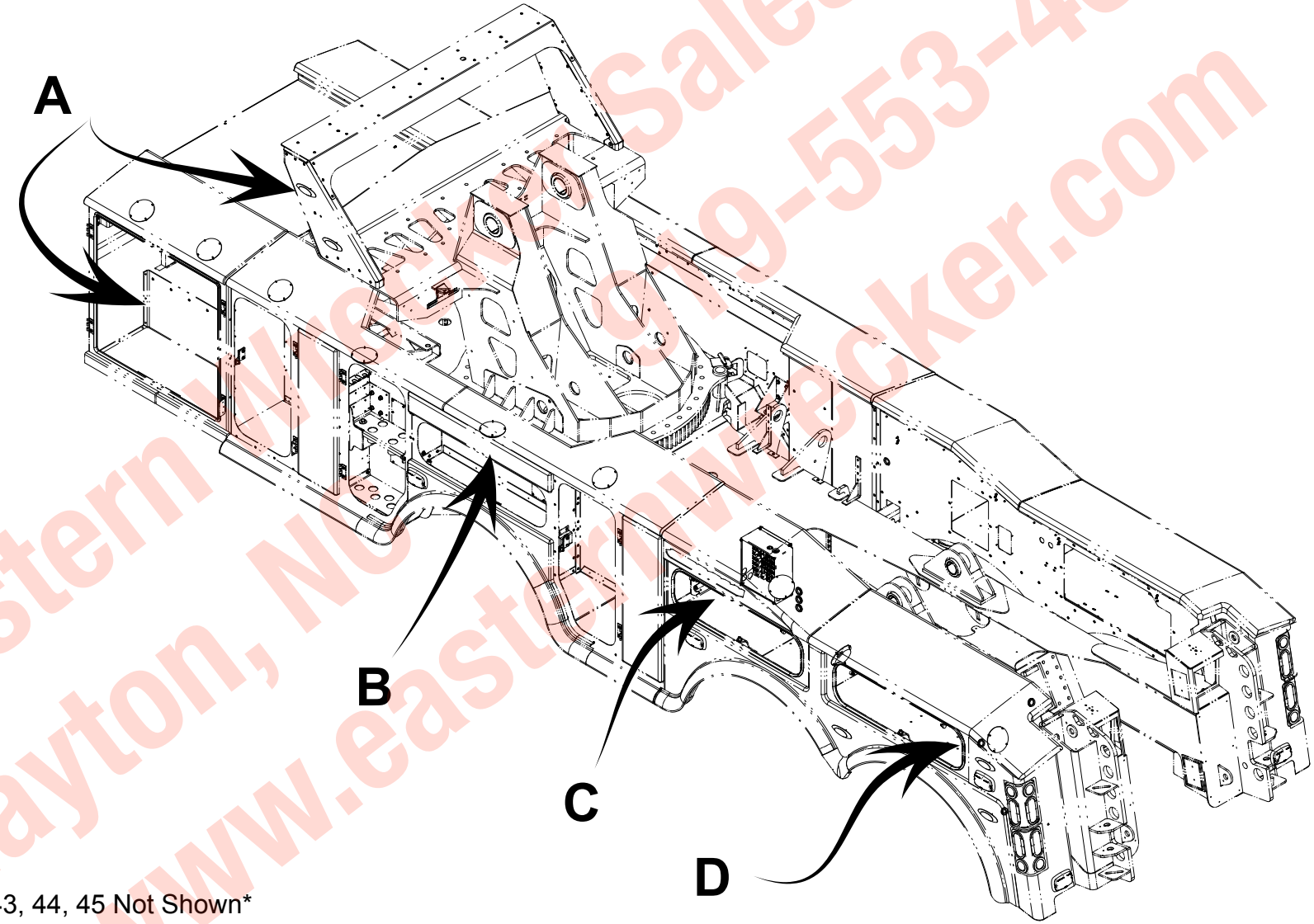


*Items 43, 44, 45 Not Shown*

Eastern Wrecker Sales, Inc.
Clayton, NC 919-553-4038
www.easternwrecker.com

## BODY LIGHTING & WIRING INSTALLATION

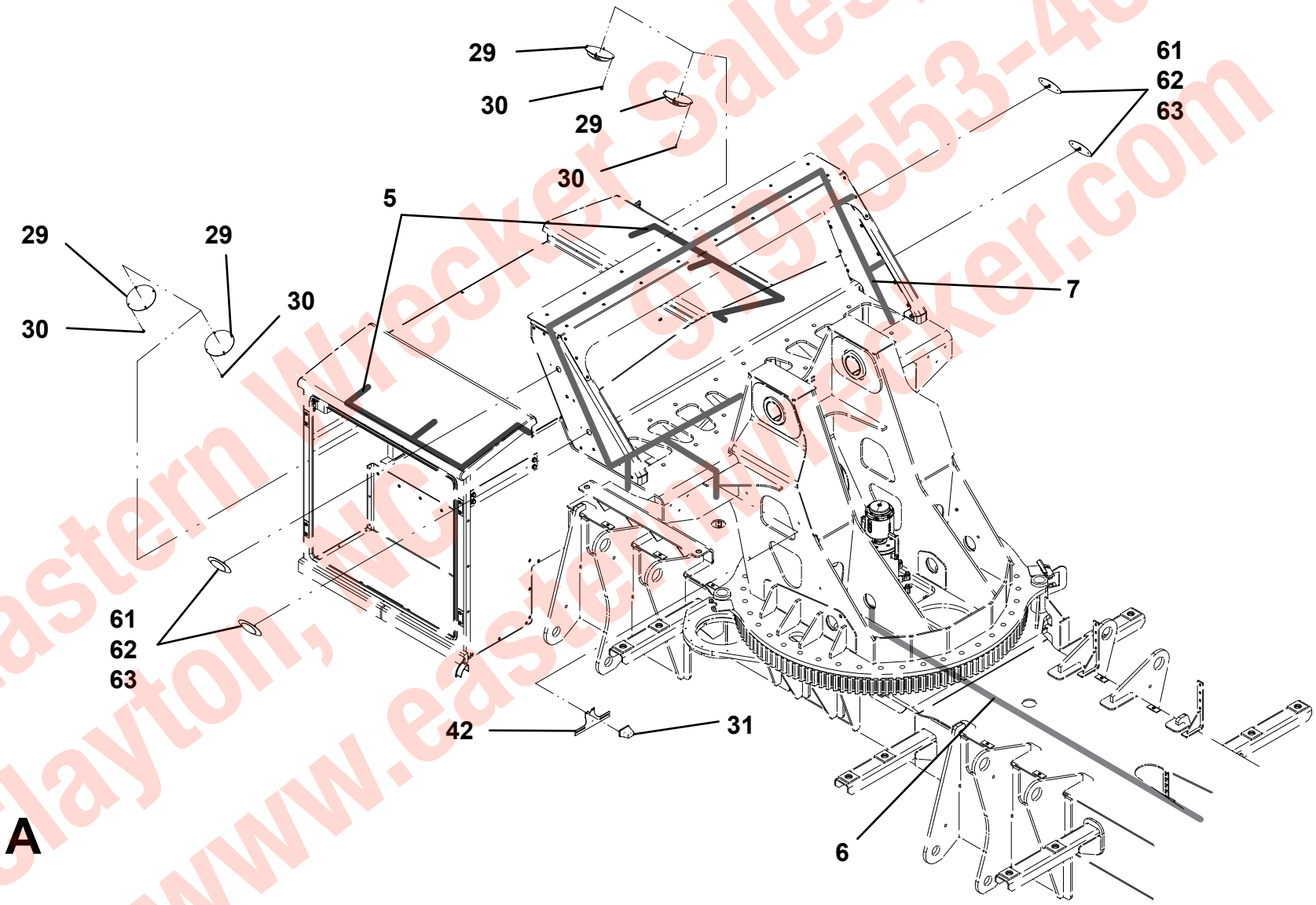


Eastern Wrecker Sales, Inc.
Clayton, NC 919-553-4038
www.easternwrecker.com

# BODY LIGHTING & WIRING INSTALLATION

| CAVITY | CIRCUIT | COLOR | FUNCTION | GA |
|---|---|---|---|---|
| 1 | 1 | ORANGE | BEACON 1 | 12 |
| 2 | 2 | ORANGE/BLACK | BEACON 2 | 12 |
| 3 | 17 | RED | BEACON AUX 1 | 12 |
| 4 | 3 | BLUE | FLOOD 2 | 12 |

| CAVITY | SWIVEL CIRCUIT | SWIVEL COLOR | FUNCTION | GAUGE |
|---|---|---|---|---|
| 1 | 8 | GREEN/BLACK | BEACON 1 | 12 |
| 2 | 9 | VIOLET | BEACON 2 | 12 |
| 3 | 10 | RED/BLACK | BEACON AUX 1 | 12 |
| 4 | 11 | BLUE/BLACK | FLOOD 2 | 12 |

## FROM TOP OF SWIVEL

7

| CAVITY | CIRCUIT | COLOR | GA | FUNCTION |
|---|---|---|---|---|
| 1 | 22 | WHITE | 10 | GROUND LIGHT BAR |
| 2 | 31 | WHITE | 10 | GRND BEACON AUX 1 |

| CAVITY | SWIVEL CIRCUIT | SWIVEL COLOR | GA | FUNCTION |
|---|---|---|---|---|
| 1 | 1 | GREEN | 10 | GROUND LIGHT BAR |
| 2 | 16 | GREEN/BROWN | 12 | GROUND WING LIGHTS |

| CAVITY | CIRCUIT | COLOR | FUNCTION | GA |
|---|---|---|---|---|
| 1 | 30 | WHITE | GRND WORK LIGHTS | 12 |
| 2 | 12 | GREEN | RH S/T | 16 |
| 3 | 13 | YELLOW | LH S/T | 16 |
| 4 | 14 | BROWN | MARKER | 16 |

| CAVITY | SWIVEL CIRCUIT | SWIVEL COLOR | FUNCTION | GAUGE |
|---|---|---|---|---|
| 1 | 17 | BROWN | GRND FLOOD 2 | 12 |
| 2 | 18 | GREEN/WHITE | RH S/T | 14 |
| 3 | 19 | WHITE/GREEN | LH S/T | 14 |
| 4 | 20 | BLACK/WHITE | MARKER | 14 |

A

| CAVITY | SWIVEL CIRCUIT | SWIVEL COLOR | FUNCTION | GAUGE |
|---|---|---|---|---|
| 1 | 8 | GREEN/BLACK | BEACON 1 | 12 |
| 2 | 9 | VIOLET | BEACON 2 | 12 |
| 3 | 10 | RED/BLACK | BEACON AUX 1 | 12 |
| 4 | 11 | BLUE/BLACK | FLOOD 2 | 12 |

## FROM BOTTOM OF SWIVEL

| CAVITY | SWIVEL CIRCUIT | SWIVEL COLOR | FUNCTION | GAUGE |
|---|---|---|---|---|
| 1 | 12 | YELLOW/BLACK | AUX 1 BOOM LIGHT | 12 |
| 2 | 18 | GREEN/WHITE | RH S/T | 14 |
| 3 | 19 | WHITE/GREEN | LH S/T | 14 |
| 4 | 20 | BLACK/WHITE | MARKER | 14 |

| CAVITY | CIRCUIT | COLOR | FUNCTION | GA |
|---|---|---|---|---|
| 1 | 1 | ORANGE | BEACON 1 | 12 |
| 2 | 2 | ORANGE/BLACK | BEACON 2 | 12 |
| 3 | 17 | RED | BEACON AUX 1 | 12 |
| 4 | 3 | BLUE | FLOOD 2 | 12 |

6

| CAVITY | CIRCUIT | COLOR | FUNCTION | GA |
|---|---|---|---|---|
| 1 | 8 | RED/WHITE | AUX 1 BOOM LIGHT | 12 |
| 2 | 12 | GREEN | RH S/T | 16 |
| 3 | 13 | YELLOW | LH S/T | 16 |
| 4 | 14 | BROWN | MARKER | 16 |

Eastern Wrecker Sales, Inc.
Clayton, NC 919-553-4038
www.easternwrecker.com

## BODY LIGHTING & WIRING INSTALLATION

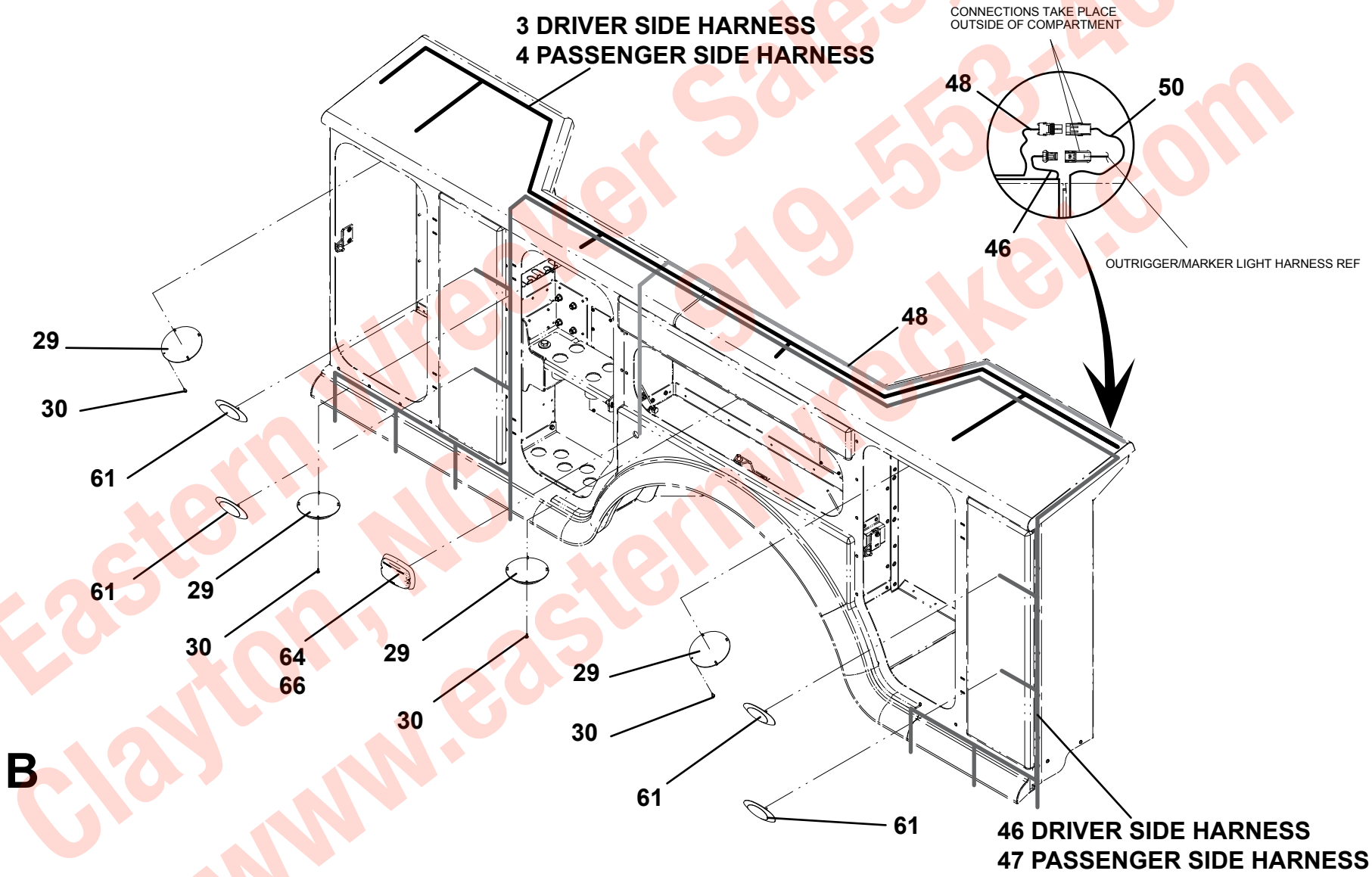


Eastern Wrecker Sales, Inc.
Clayton, NC 919-553-4038
www.easternwrecker.com

## BODY LIGHTING & WIRING INSTALLATION

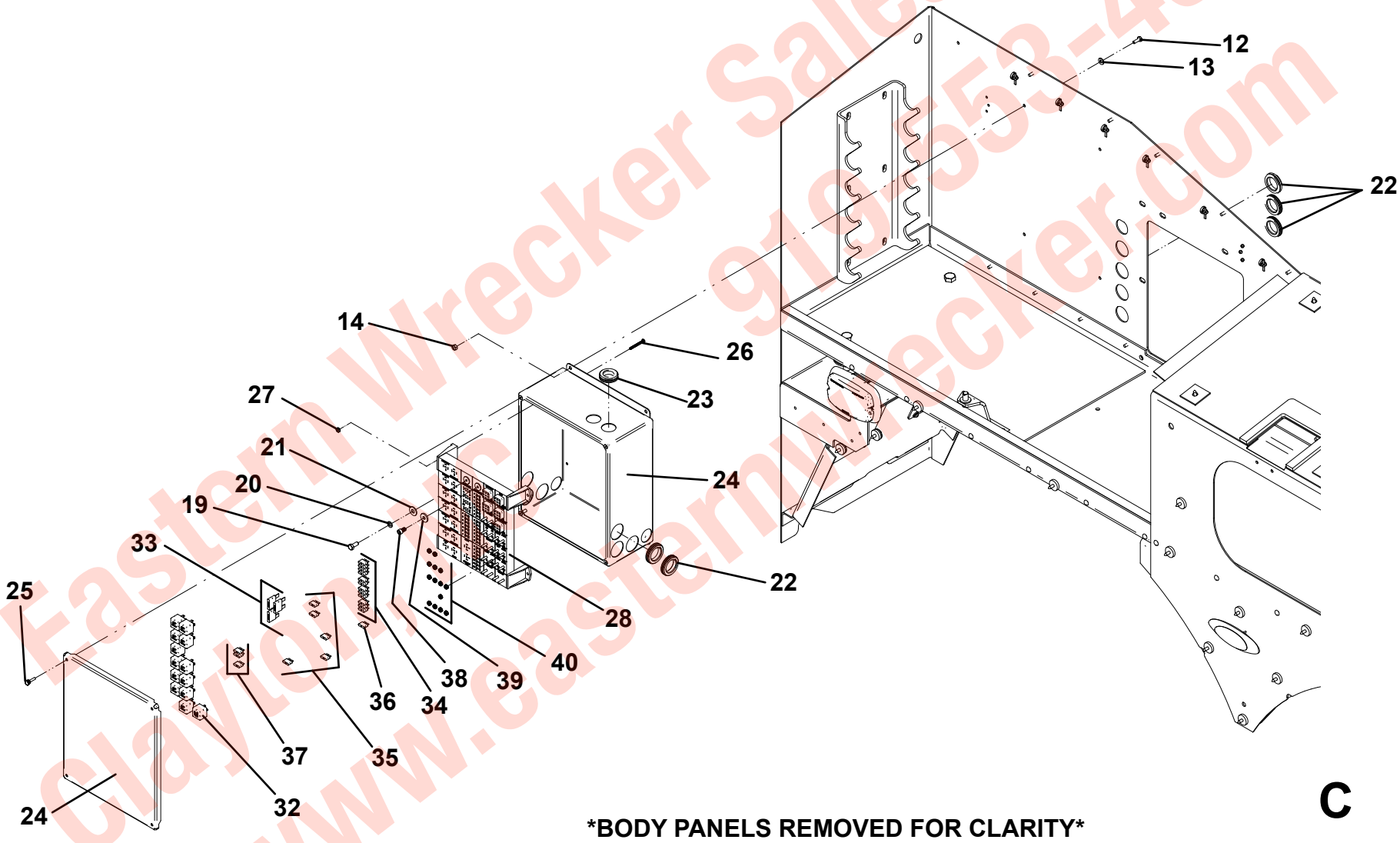


*BODY PANELS REMOVED FOR CLARITY*

Eastern Wrecker Sales, Inc.
919-553-4038
Clayton, NC
www.easternwrecker.com

# BODY LIGHTING & WIRING INSTALLATION

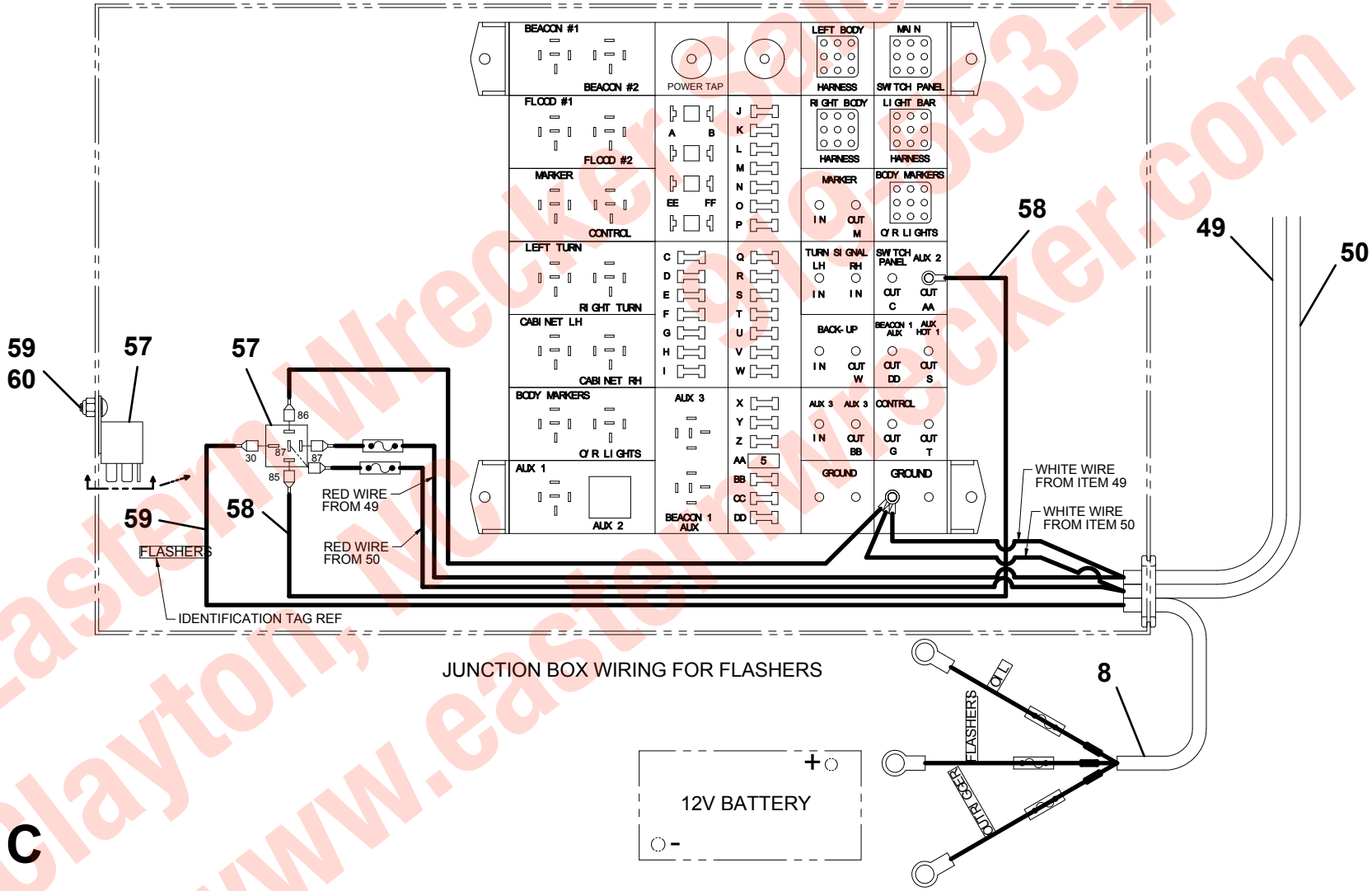


C

Eastern Wrecker Sales, Inc.
Clayton, NC 919-553-4038
www.easternwrecker.com

# BODY LIGHTING & WIRING INSTALLATION

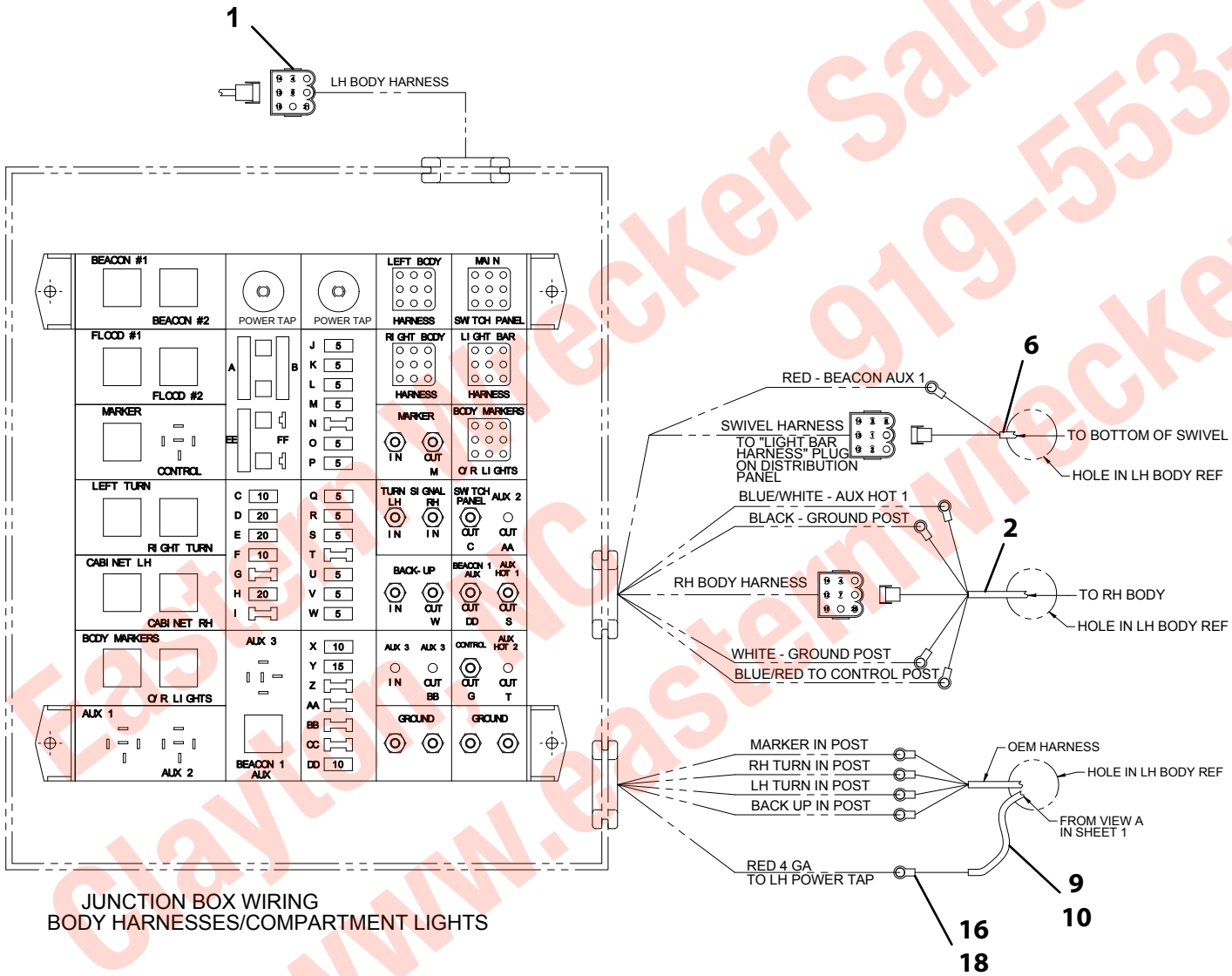


| SWIVEL TO PANEL HARNESS | | |
|---|---|---|
| 17 | RED | BEACON AUX 1 |
| CIRCUIT ID | COLOR | FUNCTION |

| RH BODY HARNESS | | |
|---|---|---|
| 28 | WHITE | GROUND FLOOD 2 |
| 26 | BLUE/RED | WIRELESS FUNCTION |
| 23 | BLACK | GROUND CHASSIS |
| 5 | BLUE/WHITE | CONTROL |
| CIRCUIT ID | COLOR | FUNCTION |

| OEM HARNESS | | |
|---|---|---|
| 14 | BROWN OR BLACK | MARKER |
| 12 | GREEN | RH TURN |
| 13 | YELLOW | LH TURN |
| 15 | BLACK OR BROWN | BACK UP |
| CIRCUIT ID | COLOR | FUNCTION |

C

Eastern Wrecker Sales, Inc.
919-553-4038
Clayton, NC
www.easternwrecker.com

## BODY LIGHTING & WIRING INSTALLATION

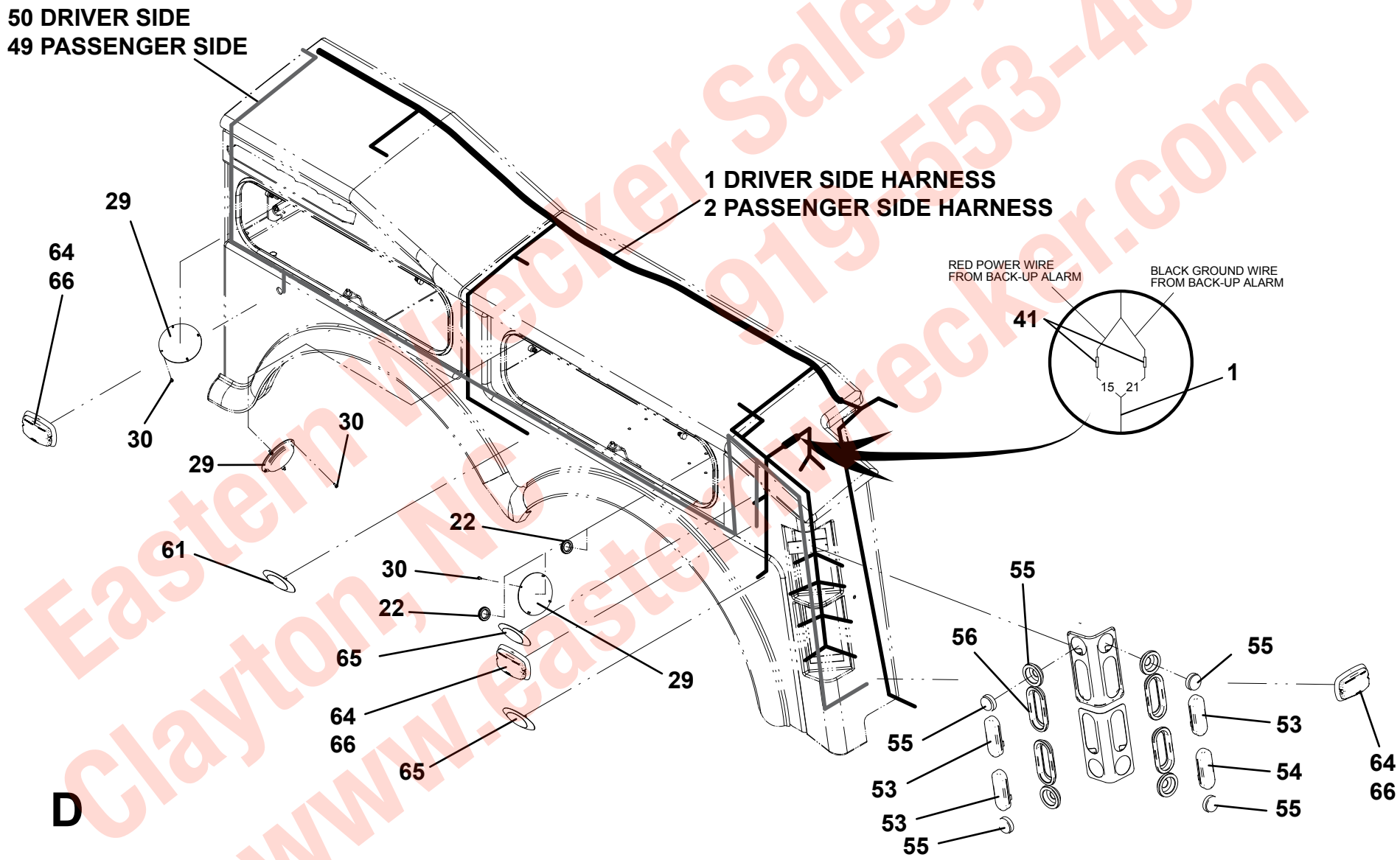


Eastern Wrecker Sales, Inc.
Clayton, NC 919-553-4038
www.easternwrecker.com

## BODY LIGHTING & WIRING INSTALLATION

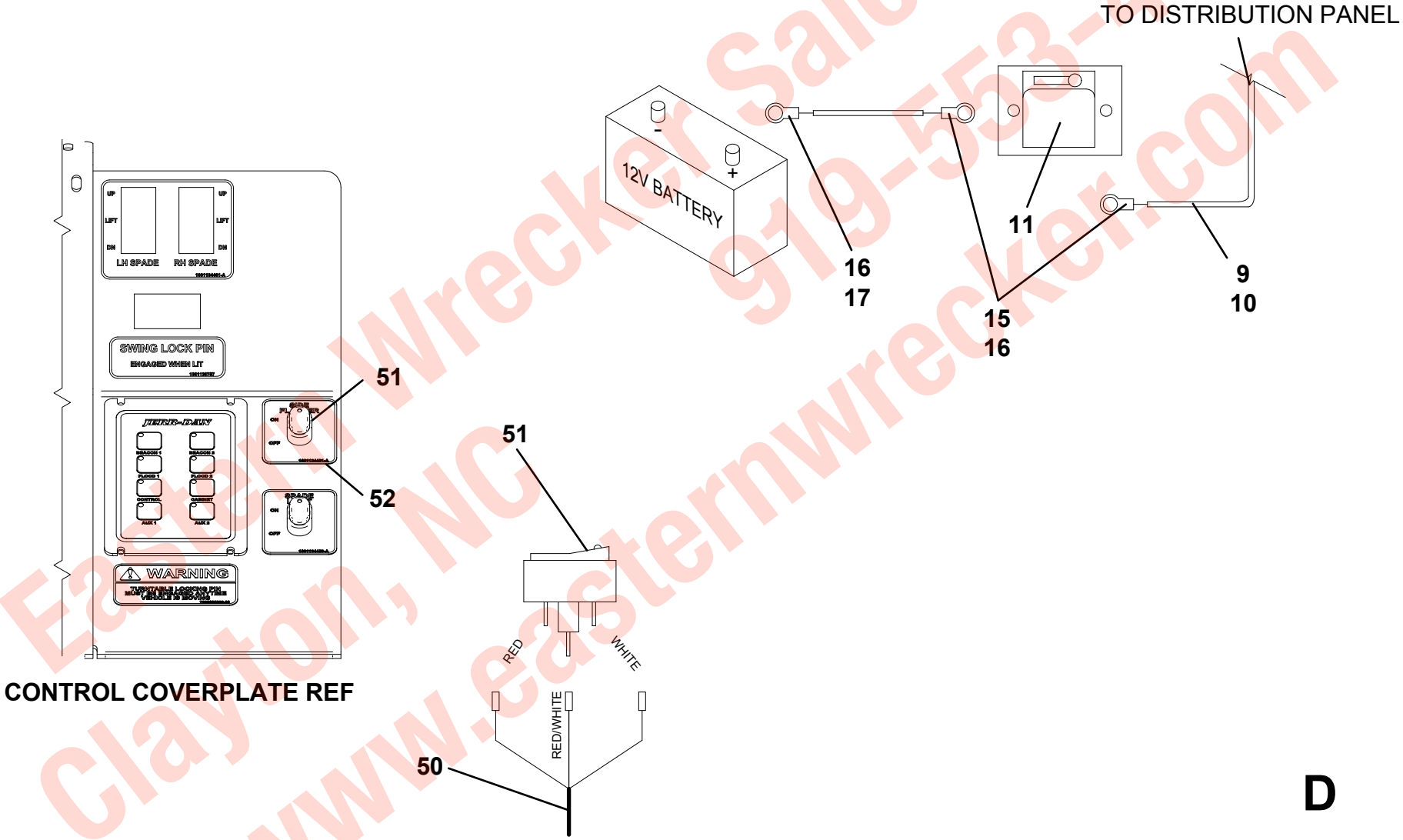


CONTROL COVERPLATE REF

D

Eastern Wrecker Sales, Inc.
919-553-4038
Clayton, NC
www.easternwrecker.com

## BACK-UP ALARM INSTALLATION

| ITEM | PART NO. | DESCRIPTION | QTY |
|---|---|---|---|
| 1 | 7011000007 | Alarm, Backup | 1 |
| 2 | 1001141265 | Screw, #14 x 0.75” | 2 |
| 3 | 7660142600 | Locknut, 0.25” - 20NC | 2 |
| 4 | 7950140141 | Flatwasher, 0.25” ID | 4 |

Eastern Wrecker Sales, Inc.
919-553-4038
Clayton, NC
www.easternwrecker.com

## BACK-UP ALARM INSTALLATION

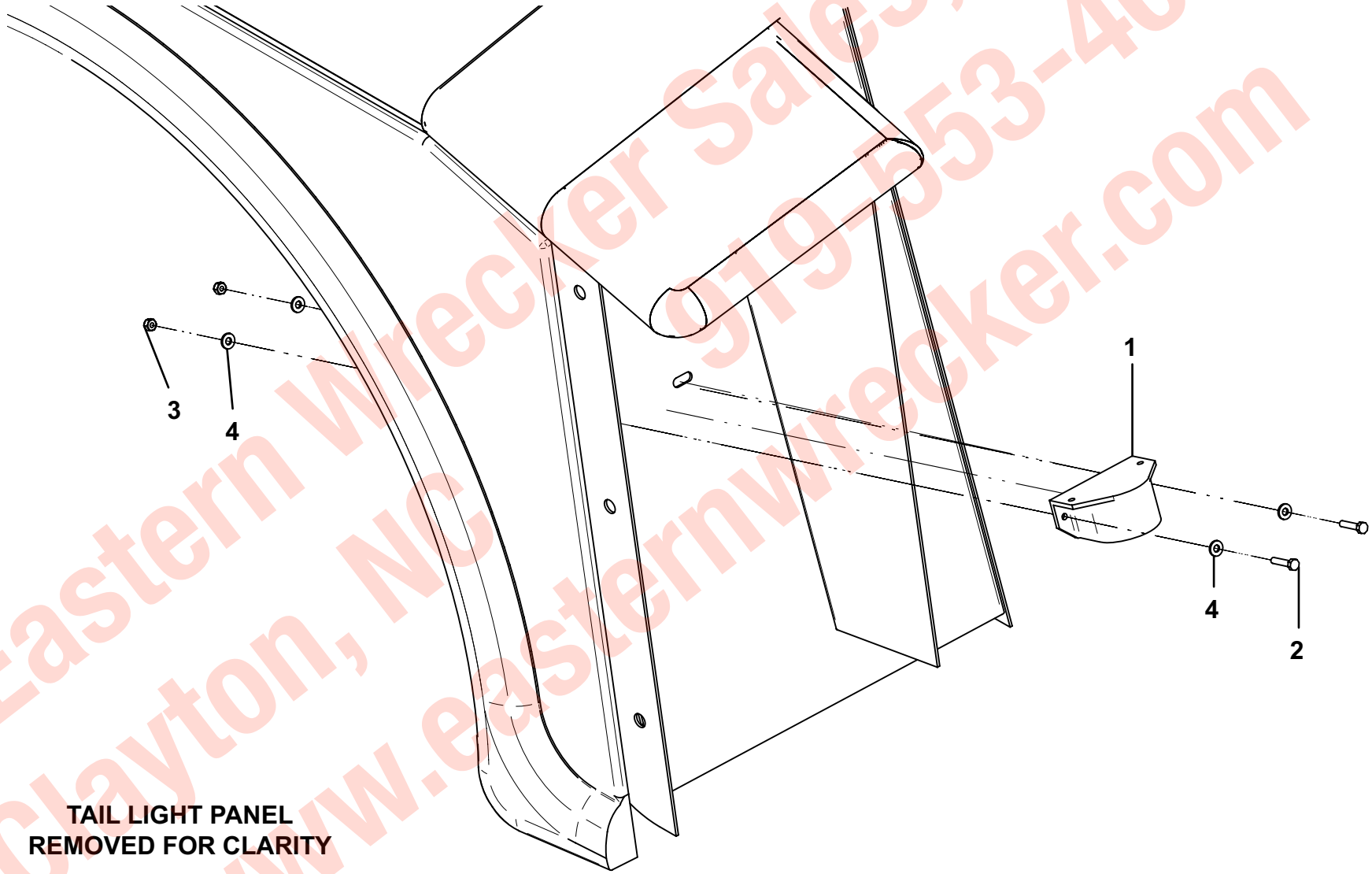


Eastern Wrecker Sales, Inc.
Clayton, NC 919-553-4038
www.easternwrecker.com

## HYDRAULIC INSTALLATION

| ITEM | PART NO. | DESCRIPTION | QTY |
|---|---|---|---|
| 1 | 1001136811* | Hose Kit | 1 |
| 2 | 7445080644 | Fitting | 4 |
| 3 | 7445080843 | Adapter | 32 |
| 4 | 7445080643 | Adapter | 8 |
| 5 | 2220773 | Adapter | 2 |
| 6 | 7445081043 | Adapter | 2 |
| 7 | 2220775 | Adapter | 1 |
| 8 | 7443000108 | Restrictor | 1 |
| 9 | 7445100843 | Adapter | 2 |
| 10 | 7445081039 | Adapter | 2 |
| 11 | 7445080837 | Union | 2 |
| 12 | 1001136881 | Adapter | 2 |
| 13 | 7470000004 | Gauge, Panel Mount Pressure | 2 |
| 14 | 7790060676 | Screw, #6 x 0.38" | 6 |
| 15 | 7445040421 | Fitting | 2 |
| 16 | 7445040425 | Union | 2 |
| 17 | 7443000408 | Fitting | 1 |
| 18 | 1001131302 | Pipe, Tube 1.00” Pressure | 1 |
| 19 | 7445161622 | Union | 1 |
| 20 | 7445161620 | Elbow | 2 |
| 21 | 7430000004 | Filter Assembly | 2 |
| 22 | 7443000158 | Elbow | 2 |
| 23 | 7445161245 | Elbow | 1 |
| 24 | 7445161243 | Fitting | 1 |
| 25 | 1001130611 | Pipe | 1 |
| 26 | 1001130610 | Ball Valve | 1 |
| 27 | 1001130597 | Hose Insert | 1 |
| 28 | 1001130587 | T-bolt Clamp | 2 |
| 29 | 1001130607 | Elbow | 1 |
| 30 | 1001130608 | Flange | 1 |
| 31 | 4178000349 | Bracket | 1 |
| 32 | 7660200200 | Nut, 0.63"-11NC | 2 |
| 33 | 1001130609 | Flange | 1 |
| 34 | 1001130589 | Elbow | 1 |
| 35 | 7445060643 | Adapter | 1 |
| 36 | 7445101043 | Adapter | 2 |
| 37 | 7445060648 | Fitting | 1 |
| 38 | 2221051 | Fitting | 2 |
| 39 | 7445161637 | Fitting | 2 |
| 40 | 7443000258 | Fitting | 2 |
| 41 | 1001130426 | Hydraulic Tank Assembly | 1 |
| 42 | 7445101018 | Fitting | 10 |
| 43 | 7443000173 | Fitting | 1 |
| 44 | 7274000076 | Clamp | 8 |
| 45 | 7785152420 | Set Screw, 0.31”-18NC x 1.50” | 8 |
| 46 | 7660152601 | Locknut, 0.31”-18NC | 22 |
| 47 | 7115151050 | Capscrew 0.31"-18NC X 1.25" | 14 |
| 48 | 7950150161 | Flatwasher 0.31" ID | 14 |
| 49 | 4706003844 | Plate | 6 |
| 50 | 1001137048 | Clamp | 5 |
| 51 | 1001137049 | Clamp | 3 |
| 52 | 7894000004 | Tie Strap | 50 |
| 53 | 1001137052 | Clamp | 19 |
| 54 | 1001143937 | Clamp | 2 |
| 55 | 7470000002 | Gauge | 2 |
| | | ***Hose Kit - 1001136811*** | |
| 101 | 1001136814 | Hose Assembly | 2 |
| 102 | 1001136817 | Hose Assembly | 2 |
| 103 | 4567130135 | Hose Assembly | 2 |
| 104 | 1001136821 | Hose Assembly | 2 |
| 105 | 1001136824 | Hose Assembly | 2 |
| 106 | 4567132085 | Hose Assembly | 2 |
| 107 | 4569140046 | Hose Assembly | 8 |
| 108 | 1001136833 | Hose Assembly | 2 |
| 109 | 1001136836 | Hose Assembly | 1 |
| 110 | 1001136841 | Hose Assembly | 2 |
| 111 | 4567120069 | Hose Assembly | 1 |
| 112 | 4570000361 | Hose Assembly | 1 |
| 113 | 1001136843 | Hose Assembly | 2 |
| 114 | 1001136844 | Hose Assembly | 2 |
| 115 | 1001136845 | Hose Assembly | 2 |
| 116 | 1001136846 | Hose Assembly | 2 |
| 117 | 1001136851 | Hose Assembly | 8 |
| 118 | 4569160030 | Hose Assembly | 8 |
| 119 | 4567150016 | Hose Assembly | 2 |
| 120 | 1001136861 | Hose Assembly | 2 |
| 121 | 1001136876 | Hose Assembly | 4 |
| 122 | 1001136883 | Hose Assembly | 2 |

Eastern Wrecker Sales, Inc.
Clayton, NC 919-553-4038
www.easternwrecker.com

## HYDRAULIC INSTALLATION

| ITEM | PART NO. | DESCRIPTION | QTY |
|---|---|---|---|
| 123 | 1001136884 | Hose Assembly | 4 |
| 124 | 4567112024 | Hose Assembly | 2 |
| 125 | 4567112038 | Hose Assembly | 1 |
| 126 | 4567110065 | Hose Assembly | 1 |
| 127 | 4567122064 | Hose Assembly | 1 |
| 128 | 4567120071 | Hose Assembly | 1 |
| 129 | 1001136891 | Hose Assembly | 4 |
| 130 | 1001136893 | Hose Assembly | 1 |
| 131 | 7565000016 | Tubing, Airline | 1.5ft |
| 132 | 1001136957 | Hose Assembly | 1 |
| 133 | 1001136958 | Hose Assembly | 1 |
| 134 | 1001136960 | Hose Assembly | 1 |
| 135 | 4569180044 | Hose Assembly | 1 |
| 136 | 4567182031 | Hose Assembly | 1 |
| | | **UL530/565 Hydraulic Installation** | |
| 201 | 7445060643 | Adapter | 8 |
| 202 | 4570000167 | Hose Assembly | 4 |
| 203 | 4619000006 | Manifold | 1 |
| 204 | 7115161650 | Capscrew, 0.38" - 16NC x 2.00" | 2 |
| 205 | 7950160000 | Lockwasher, 0.38" ID | 2 |
| 206 | 4567120022 | Hose Assembly | 2 |
| | | **DP 50 Winch Hydraulic Installation** | |
| 301 | 1001136772 | Hose Assembly | 2 |
| 302 | 1001136792 | Hose Assembly | 2 |
| 303 | 7445101045 | Elbow | 2 |
| 304 | 7445101043 | Adapter | 2 |
| | | **DP 35 Winch Hydraulic Installation** | |
| 401 | 7445100845 | Elbow | 1 |
| 402 | 1001136761 | Hose Assembly | 2 |
| 403 | 7445100843 | Adapter | 1 |
| 404 | 2220973 | Adapter | 1 |
| | | **Supply/Pressure Hose Installation** | |
| 501 | 1001136896 | Hose Assembly | 1 |
| 502 | 1001136939 | Hose Assembly | 9.5ft |
| | | **UL300/ 350 Hydraulic Installation** | |
| 601 | 7445060643 | Adapter | 4 |
| 602 | 4570000218 | Hose Assembly | 2 |
| 603 | 1001136807 | Hose Assembly | 2 |

Eastern Wrecker Sales, Inc.
Clayton, NC 919-553-4038
www.easternwrecker.com

# HYDRAULIC INSTALLATION

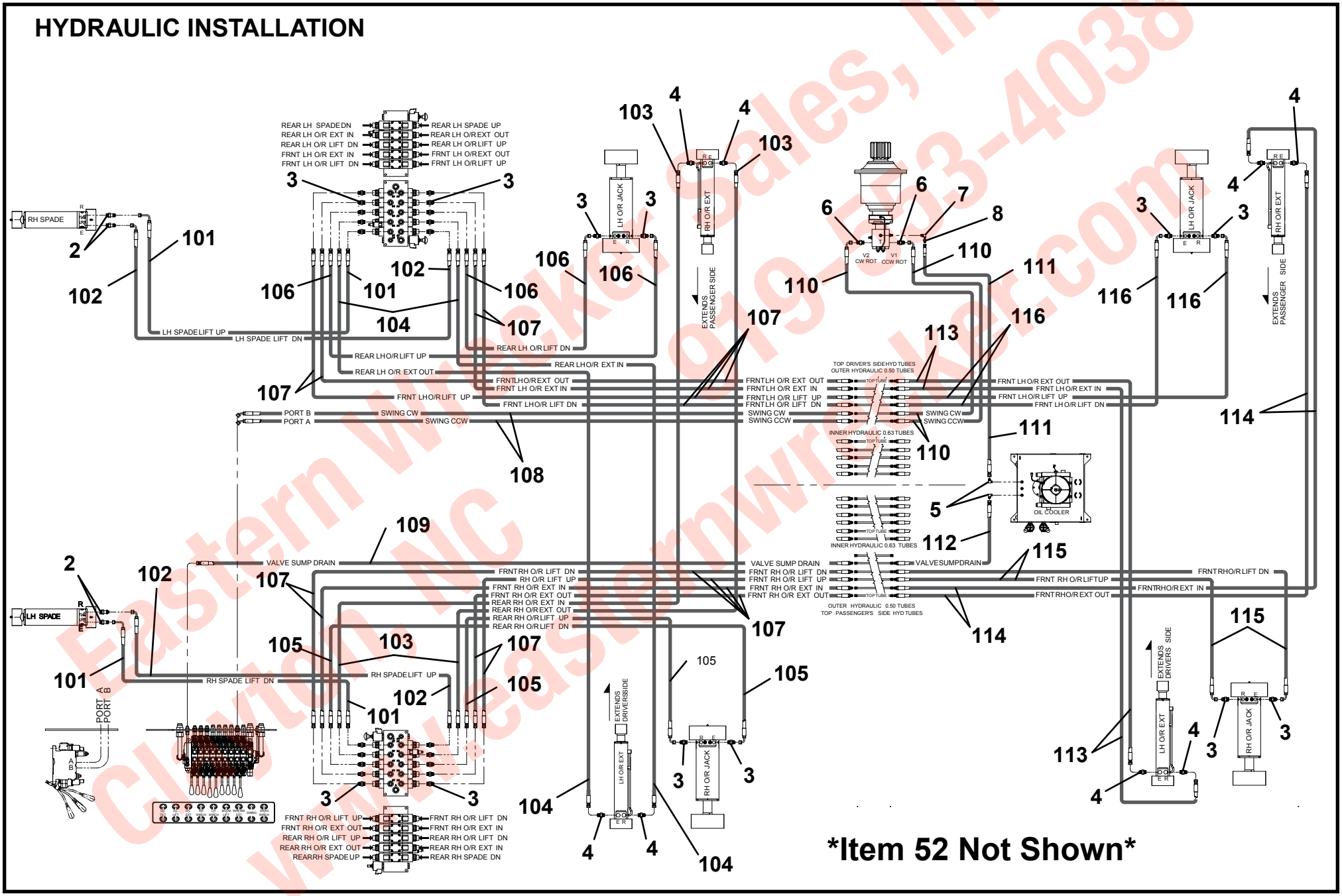


Eastern Wrecker Sales, Inc.
Clayton, NC 919-553-4038
www.easternwrecker.com

# HYDRAULIC INSTALLATION

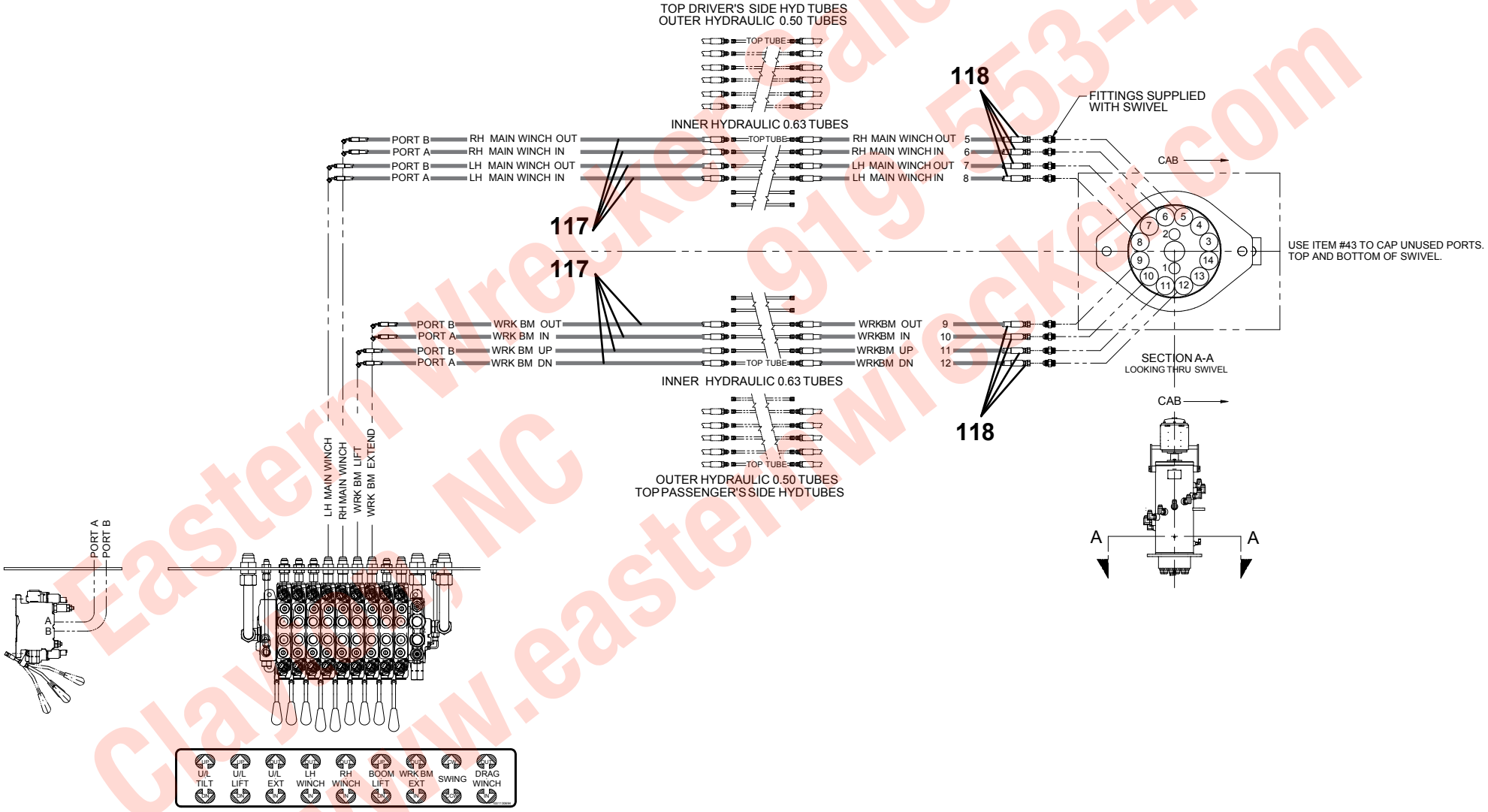


Eastern Wrecker Sales, Inc.
Clayton, NC 919-553-4038
www.easternwrecker.com

## HYDRAULIC INSTALLATION

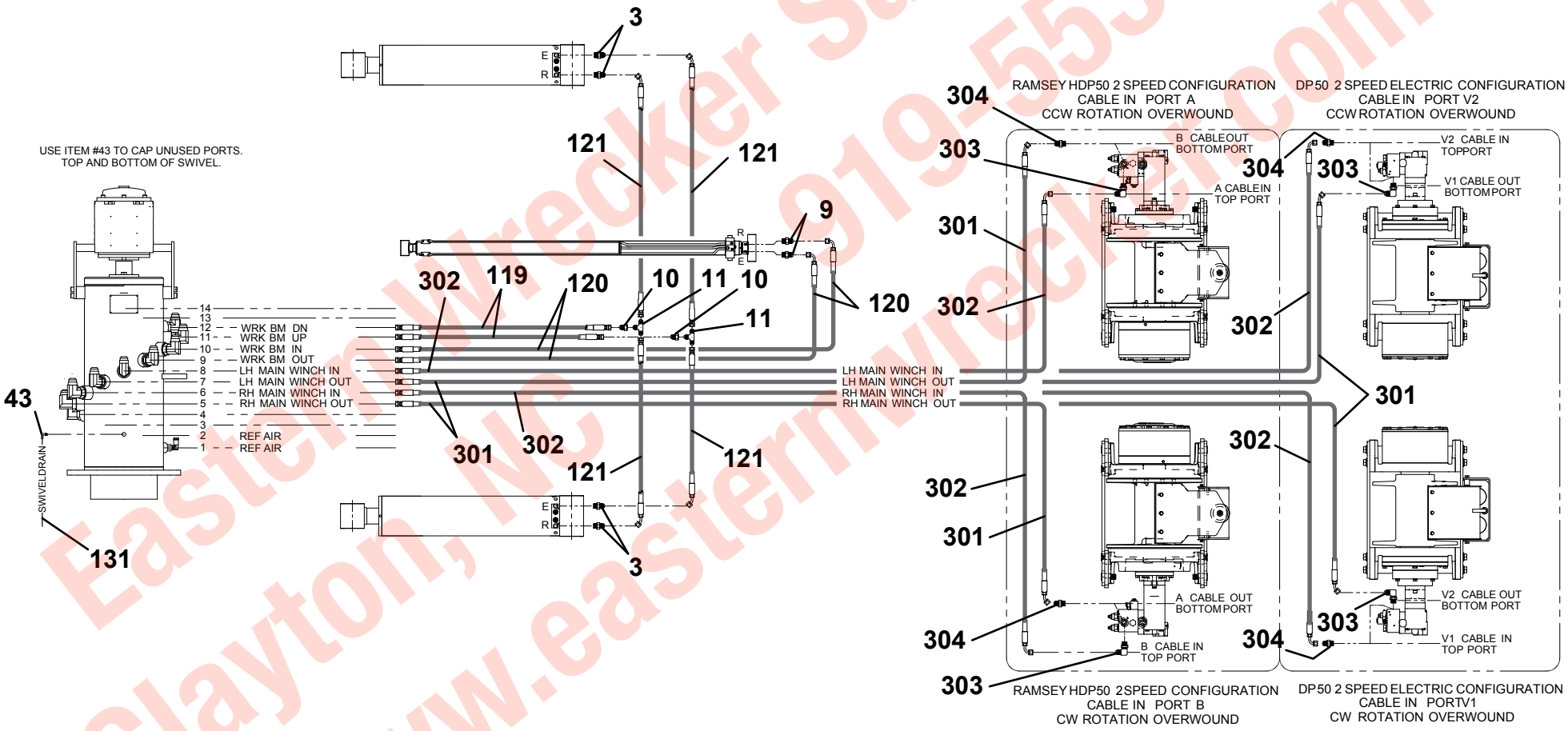


Eastern Wrecker Sales, Inc.
Clayton, NC 919-553-4038
www.easternwrecker.com

## HYDRAULIC INSTALLATION

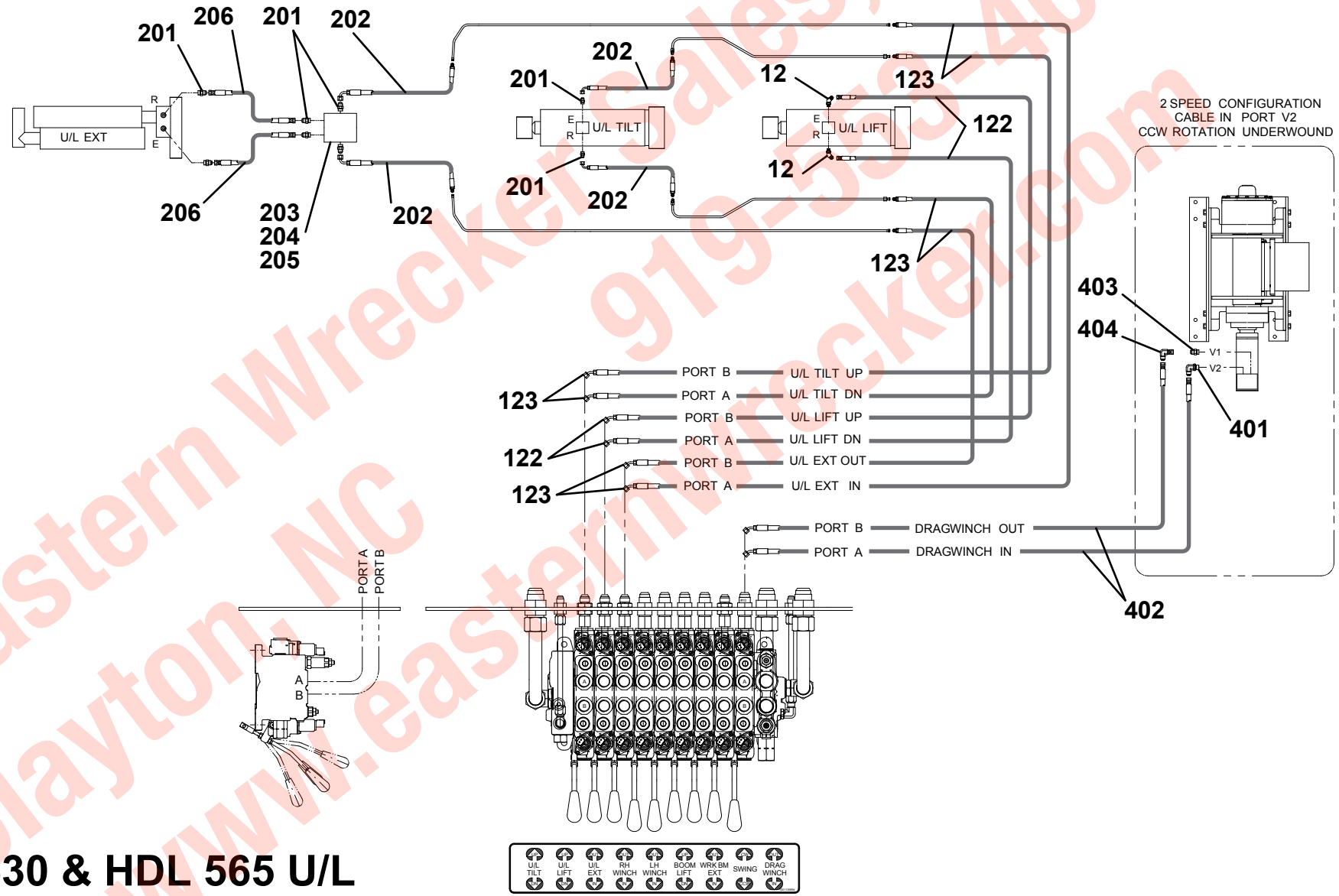


# HDL 530 & HDL 565 U/L

Eastern Wrecker Sales, Inc.
Clayton, NC
919-553-4038
www.easternwrecker.com

## HYDRAULIC INSTALLATION

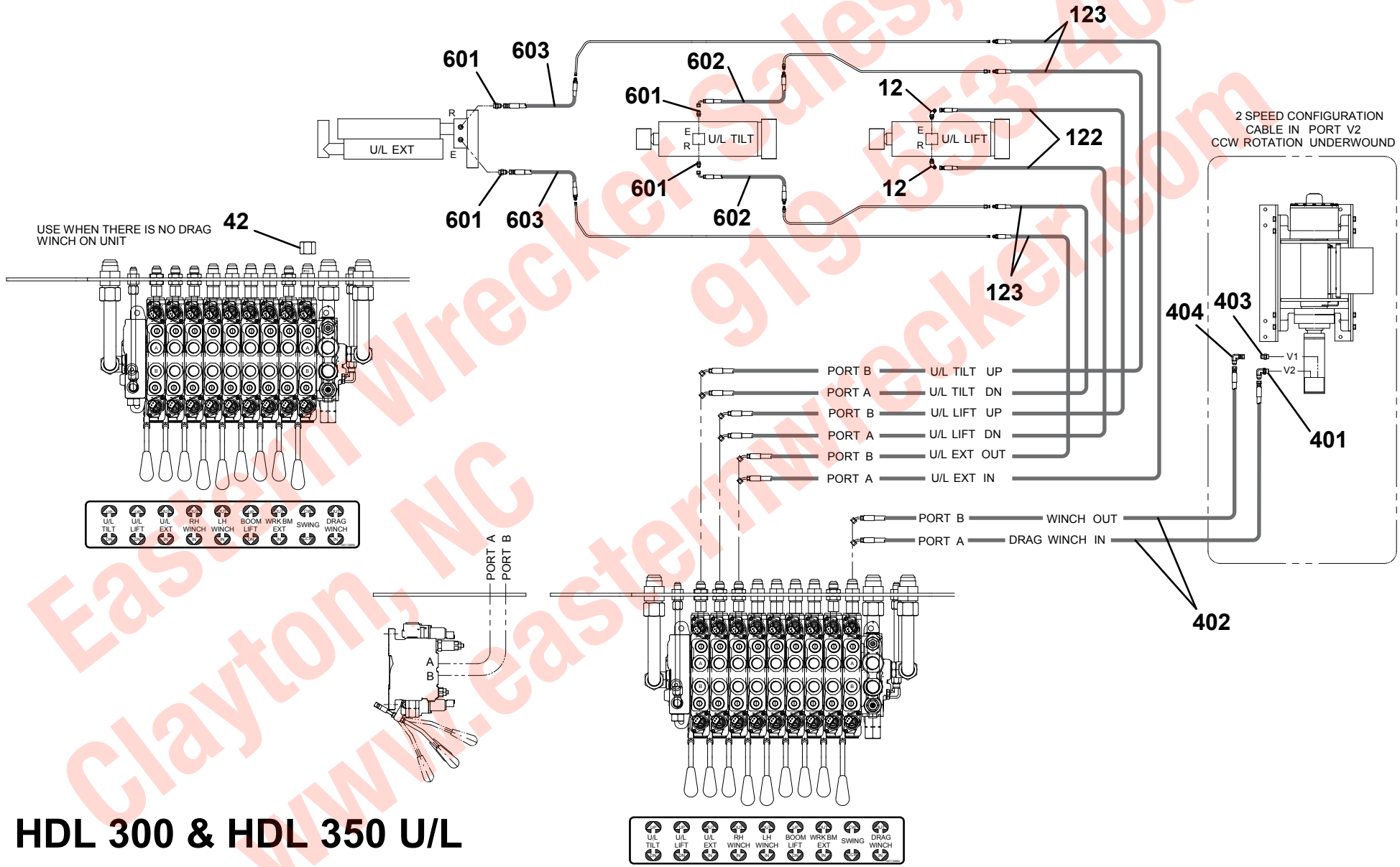


# HDL 300 & HDL 350 U/L

Eastern Wrecker Sales, Inc.
Clayton, NC
919-553-4038
www.easternwrecker.com

# HYDRAULIC INSTALLATION

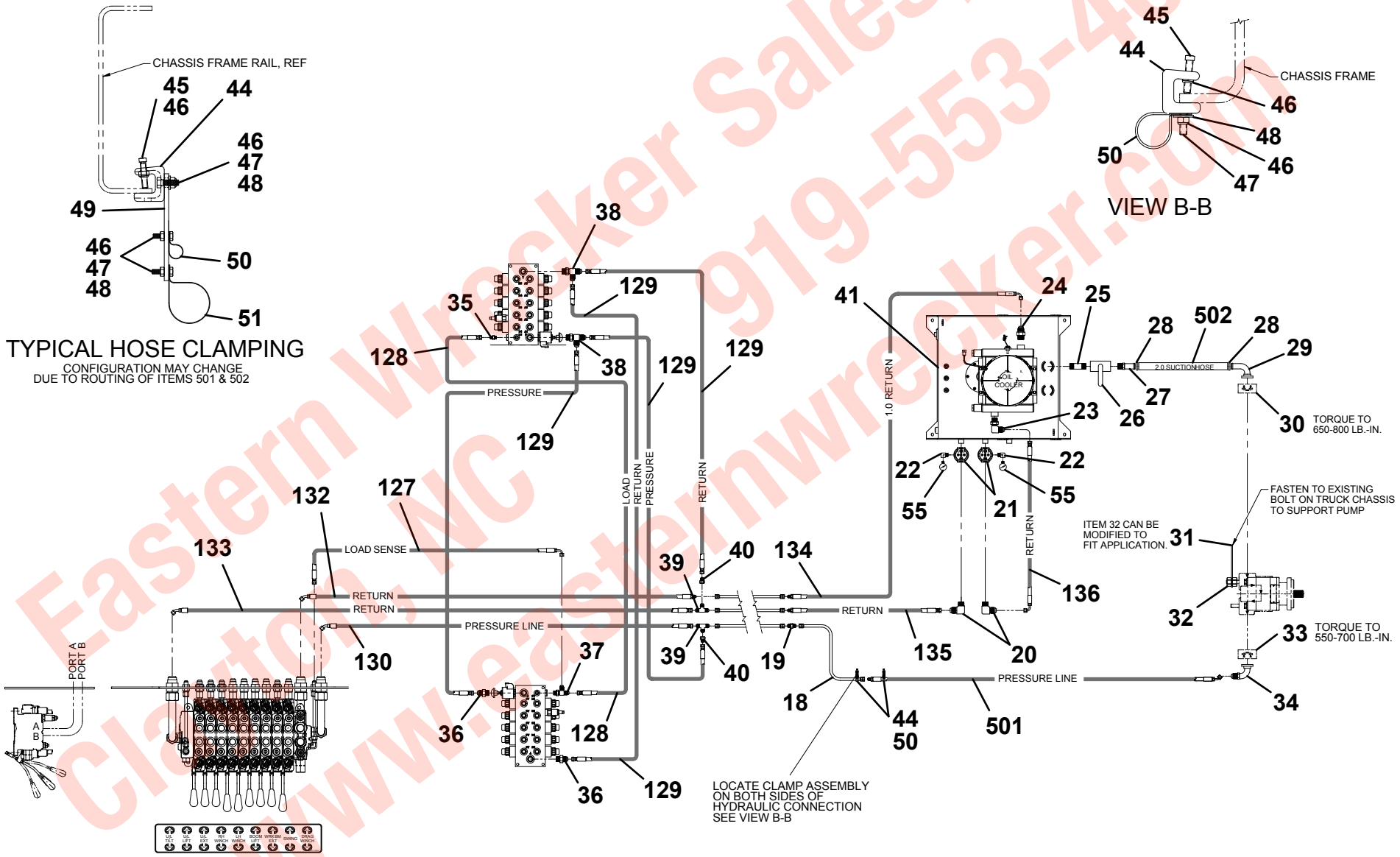


Eastern Wrecker Sales, Inc.
Clayton, NC 919-553-4038
www.easternwrecker.com

## HYDRAULIC INSTALLATION

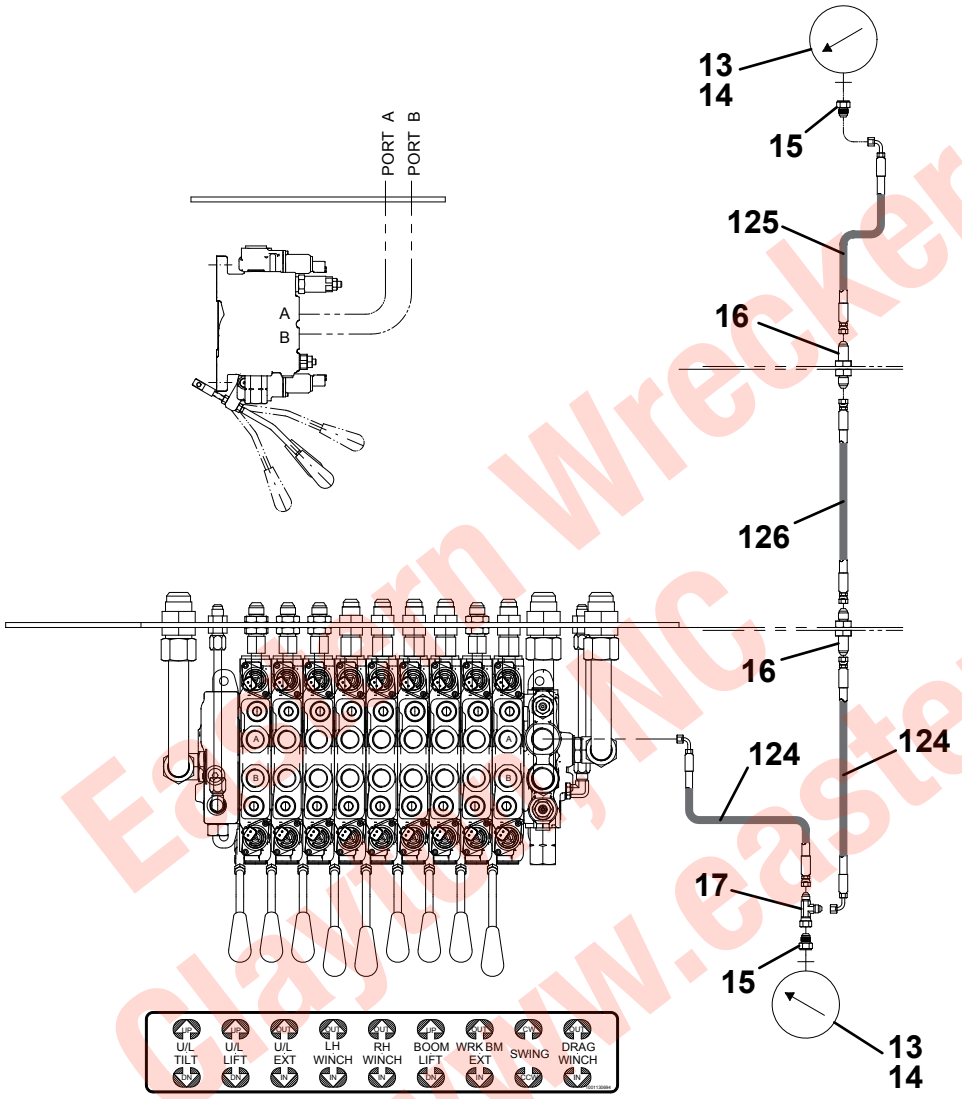


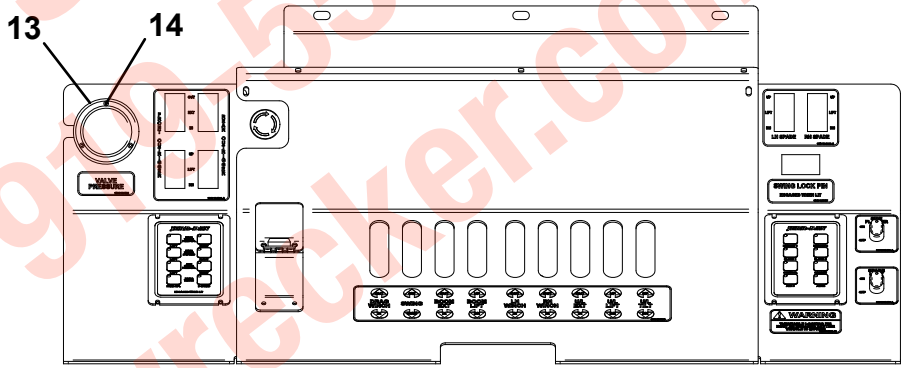


LH CONTROL STATION

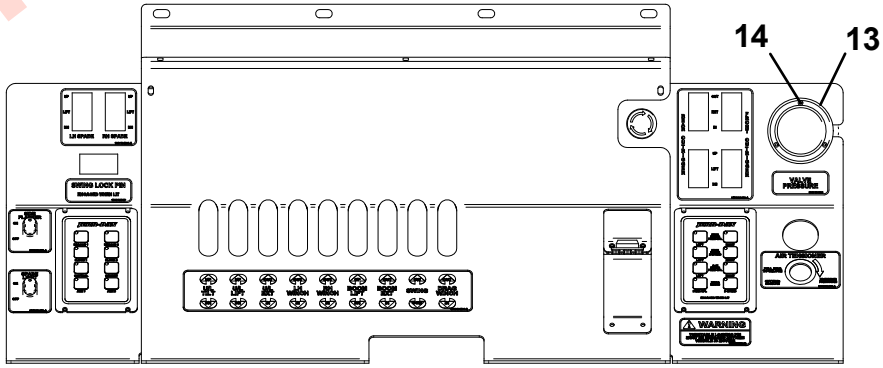


RH CONTROL STATION

Eastern Wrecker Sales, Inc.
Clayton, NC 919-553-4038
www.easternwrecker.com

## HYDRAULIC INSTALLATION

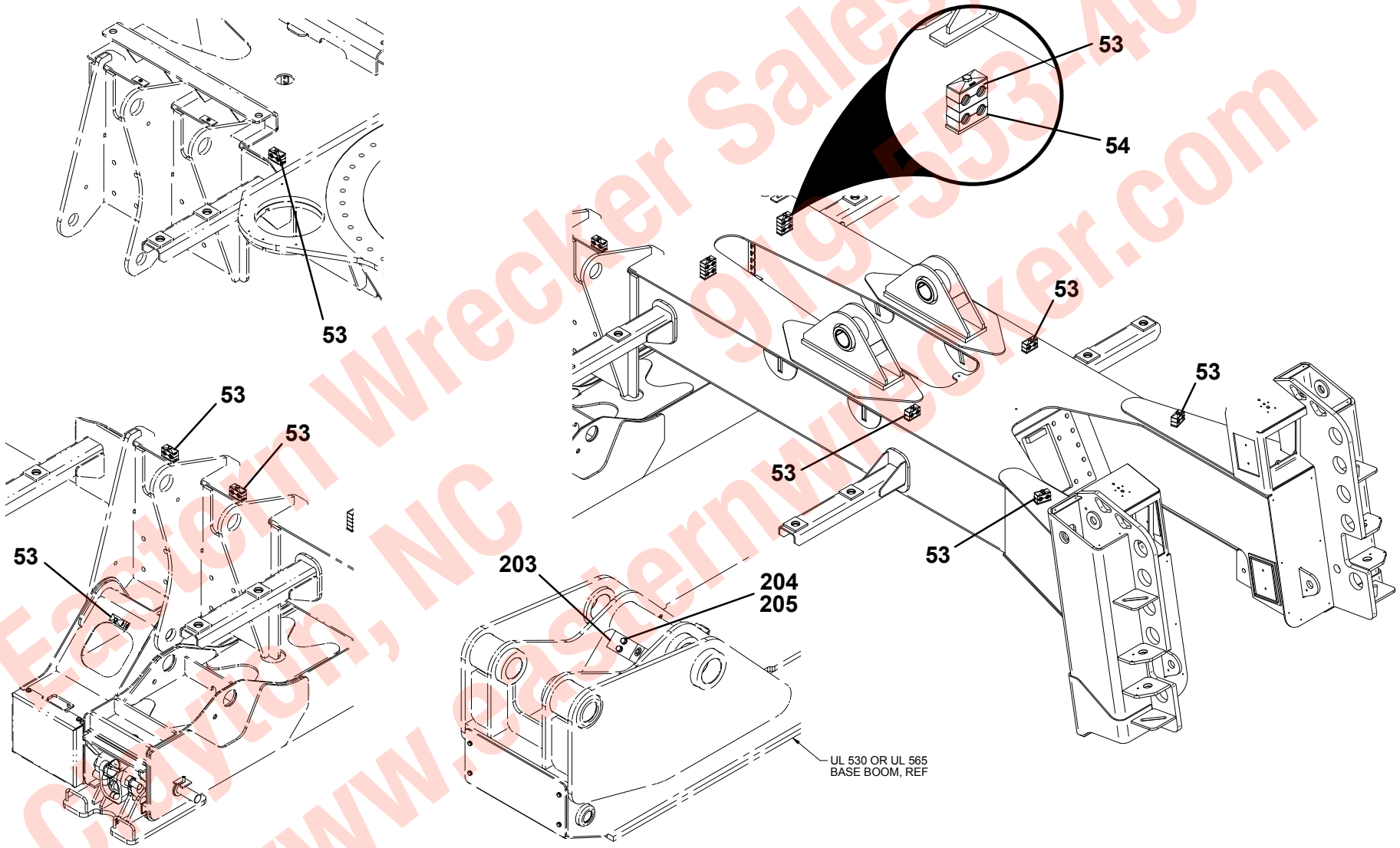


Eastern Wrecker Sales, Inc.
Clayton, NC 919-553-4038
www.easternwrecker.com

## CONTROL VALVE - 1001127671

| ITEM | PART NO. | DESCRIPTION | QTY |
|---|---|---|---|
| 1 | 70050513 | Housing - Inlet | 1 |
| 2 | 70050512 | Housing - Spool | 9 |
| 3 | 70050511 | Housing - Outlet | 1 |
| 4 | 70050510 | Lever Assembly | 8 |
| 5 | 70050481 | Nut | 6 |
| 6 | 8034697 | O-Ring | 10 |
| 7 | 70050508 | O-Ring | 40 |
| 8 | 70050507 | O-Ring | 20 |
| 9 | 10837929 | Poppet | 9 |
| 10 | 10837937 | Spring | 9 |
| 11 | 70050483 | Tie Rod | 3 |
| 12 | 70050482 | Washer - Compression | 6 |
| 13 | 70050491 | Inlet Section Assembly | 1 |
| 14 | 70050490 | Spool Section Assembly | 3 |
| 15 | 70050489 | Spool Section Assembly | 1 |
| 16 | 70050488 | Spool Section Assembly | 1 |
| 17 | 70050487 | Spool Section Assembly | 1 |
| 18 | 70050486 | Spool Section Assembly | 2 |
| 19 | 70050485 | Spool Section Assembly | 1 |
| 20 | 70050484 | Outlet Section Assembly | 1 |
| 21 | 70050480 | Shut Off Plug Assembly | 13 |
| 22 | 70050479 | Relief Valve Assembly | 3 |
| 23 | 70050478 | Relief Valve Assembly | 2 |
| 24 | 70050477 | Relief Valve Assembly | 1 |
| 25 | 70050476 | Drain Regulator Assembly | 1 |
| 26 | 70050475 | Plug Assembly - SAE | 3 |
| 27 | 70050474 | Pressure Regulating Valve Assembly | 1 |
| 28 | 70050473 | Plug Assembly - SAE | 2 |
| 29 | 70050472 | Plug Assembly - SAE | 2 |
| 30 | 70050471 | Nameplate Assembly | 1 |
| 31 | 70050506 | Ball | 1 |
| 32 | 70050505 | Cap Assembly | 1 |
| 33 | 70050504 | Plug Assembly - Metric | 16 |
| 34 | 70050503 | Plug Assembly - Metric | 10 |
| 35 | 70050502 | Plug Assembly - SAE | 9 |
| 36 | 70050501 | Set Screw | 1 |
| 37 | 70050500 | Spool Assembly | 3 |
| 38 | 70050499 | Spool Assembly | 1 |
| 39 | 70050498 | Spool Assembly | 1 |
| 40 | 70050497 | Spool Assembly | 1 |
| 41 | 70050496 | Spool Assembly | 2 |
| 42 | 70050495 | Spool Assembly | 1 |
| 43 | 70050494 | Spool Compensator | 9 |
| 44 | 70050493 | Spool - Unloader | 1 |
| 45 | 70050492 | Spring | 1 |

Eastern Wrecker Sales, Inc.
Clayton, NC 919-553-4038
www.easternwrecker.com

## CONTROL VALVE - 1001127671

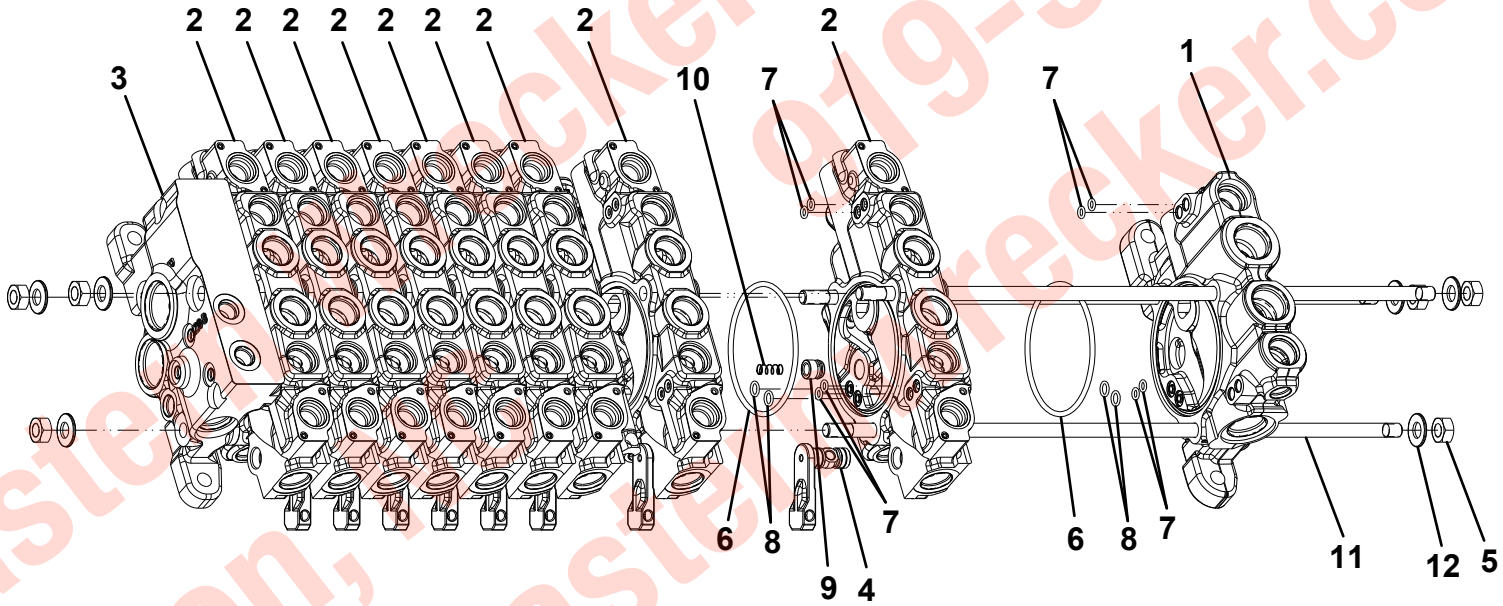


Eastern Wrecker Sales, Inc.
Clayton, NC 919-553-4038
www.easternwrecker.com

## CONTROL VALVE - 1001127671

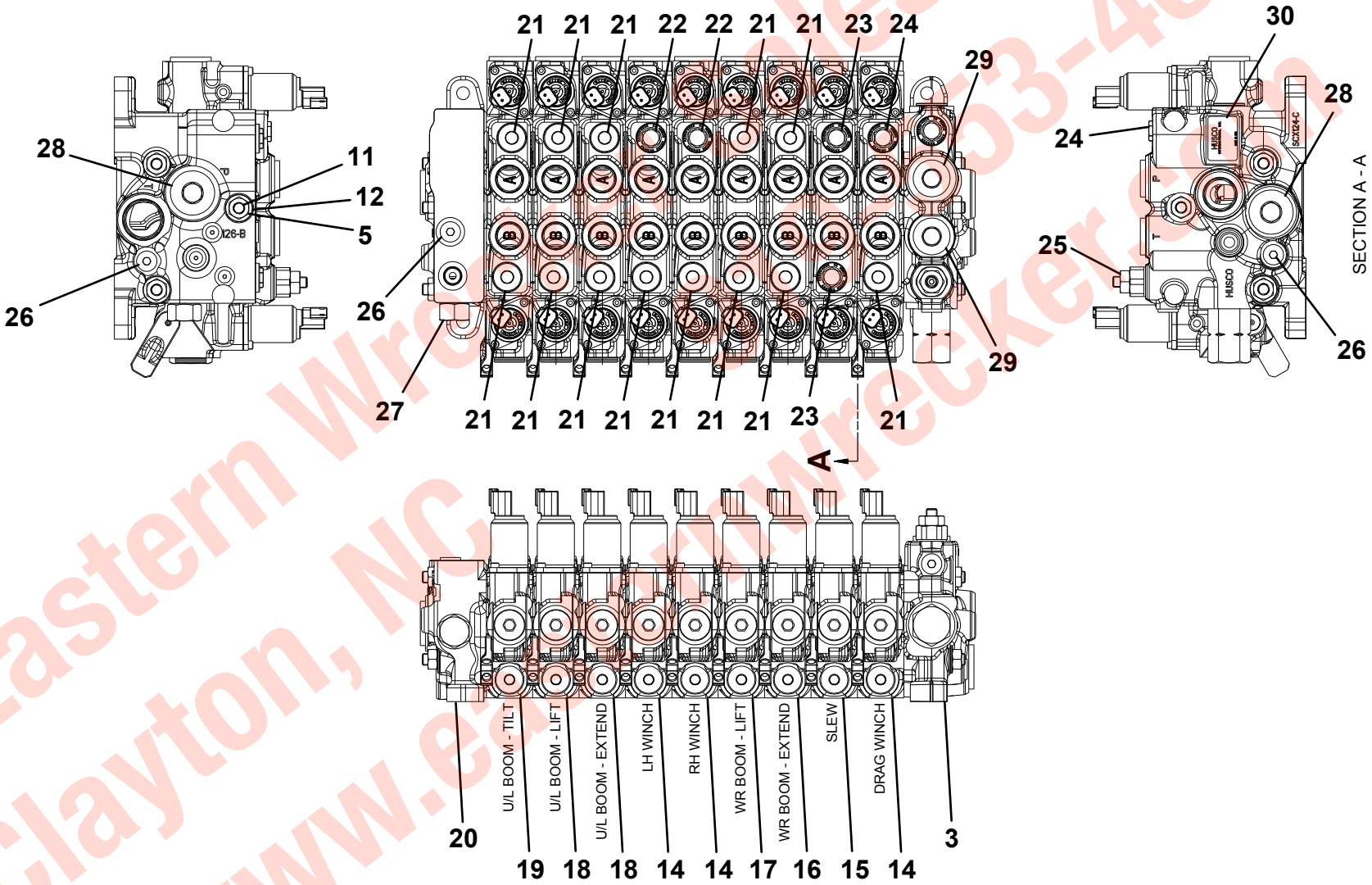


Eastern Wrecker Sales, Inc.
Clayton, NC 919-553-4038
www.easternwrecker.com

## CONTROL VALVE - 1001127671

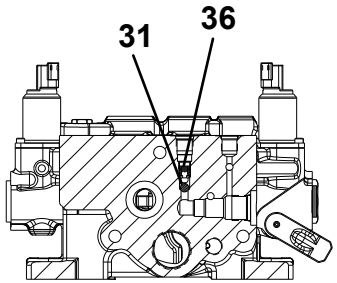


SECTION C- C

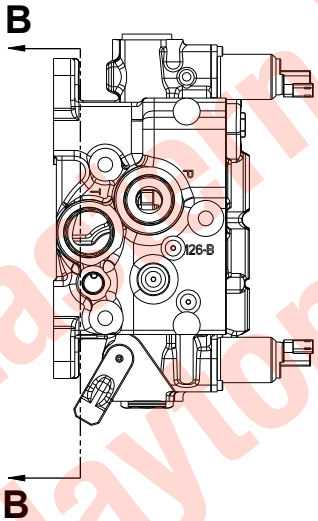


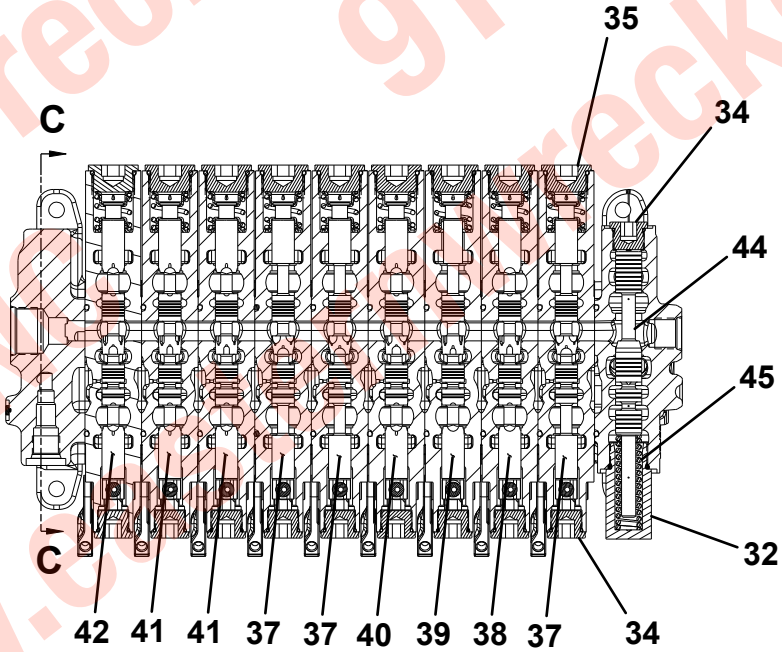


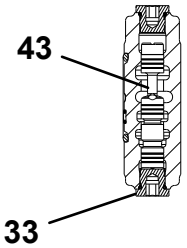


SECTION B - B

COMMON PARTS FOR
EACH SPOOL SECTION

Eastern Wrecker Sales, Inc.
919-553-4038
Clayton, NC
www.easternwrecker.com

## CONTROLS INSTALLATION - 9 SECTION

| ITEM | PART NO. | DESCRIPTION | QTY |
|---|---|---|---|
| 1 | 1001130385 | Hood, Control RH Top | 1 |
| 2 | 1001154273 | Panel, Control Cover Center RH | 1 |
| 3 | 1001154069 | Panel, Control Cover Rear RH | 1 |
| 4 | 1001154274 | Panel, Control Cover Front RH | 1 |
| 5 | 1001130347 | Hood, Control LH Top | 1 |
| 6 | 1001154275 | Panel, Control Cover Center LH | 1 |
| 7 | 1001154276 | Panel, Control Cover Front LH | 1 |
| 8 | 1001154070 | Panel, Control Cover Rear LH | 1 |
| 9 | 1001134412 | Panel, O/R Valve Cover Front | 2 |
| 10 | 1001134411 | Panel, O/R Valve Cover Top | 2 |
| 11 | 4062000717 | Bar | 1 |
| 12 | 7950160161 | Flatwasher, 0.38” ID | 102 |
| 13 | 7950160000 | Lockwasher, 0.38” ID | 2 |
| 14 | 7115160650 | Bolt, 0.38”-16NC x 2.00” | 2 |
| 15 | 1001130485 | Cable, Push - Pull 90” | 7 |
| 16 | 1001130484 | Cable, Push - Pull 75” | 2 |
| 17 | 1001130287 | Valve Assembly, 9 Section | 1 |
| 18 | 1001130450 | Panel, Controls | 1 |
| 19 | 7950140000 | Lockwasher, 0.25” ID | 42 |
| 20 | 7114140618 | Capscrew, 0.25”-20NC x 0.75” | 42 |
| 21 | 7413000002 | Nutsert, 0.25”-20NC | 42 |
| 22 | 7115161050 | Capscrew, 0.38”-16NC x 1.25” | 14 |
| 23 | 7660162601 | Locknut, 0.38”-16NC | 39 |
| 24 | 7115161450 | Capscrew, 0.38”-16NC x 1.75” | 11 |
| 25 | 7660160000 | Nut, 0.38”-16NC | 11 |
| 26 | 7950140161 | Flatwasher, 0.25” ID | 52 |
| 27 | 1001130340 | Bar | 4 |
| 28 | 7115161250 | Capscrew, 0.38”-16NC 1.50” | 8 |
| 29 | 7796000012 | Seal | 28ft |
| 30 | 7660140230 | Nut, 0.25”-28NF | 18 |
| 31 | 7577000273 | Kit, Control Handle Yoke | 18 |
| 32 | 1001130262 | Bracket | 1 |
| 33 | 7082000005 | Bearing, 0.75” ID x 1.00” OD | 2 |
| 34 | 1001130086 | Handle, Long LH | 3 |
| 35 | 1001130087 | Handle, Short LH | 6 |
| 36 | 7806000008 | Shaft, 0.75” x 21.00” | 1 |
| 37 | 7754000009 | Retaining Ring | 2 |
| 38 | 1001130313 | Plate | 1 |
| 39 | 7660142601 | Locknut, 0.25”-20NC | 9 |
| 40 | 7115140850 | Bolt, 0.25”-20NC x 1.00” | 9 |
| 41 | 1001137159 | Plate | 2 |
| 42 | 1001154277 | Decal, Remote | 1 |
| 43 | 1001130491 | Control Knob Ball | 9 |
| 44 | 1001134450 | Decal, Control Valve RH | 1 |
| 45 | 1001136146 | Decal, Control Station Hazard | 2 |
| 46 | 1704260 | Decal, Emergency Hop | 2 |
| 47 | 1001134433 | Decal, Air Tensioner | 1 |
| 48 | 1001131032 | Decal, Valve Pressure | 2 |
| 49 | 7115163250 | Capscrew, 0.38”-16NC x 4.00” | 6 |
| 50 | 1001154075 | Decal, Swing | 2 |
| 51 | 7701000003 | Plug | 1 |
| 52 | 1001134461 | Decal, Spades | 2 |
| 53 | 1001134462 | Decal, Outrigger Control RH | 1 |
| 54 | 1001134376 | Valve, Outrigger Control | 2 |
| 55 | 1001134463 | Decal, Outrigger Control LH | 1 |
| 56 | 1001137160 | Decal, Manual Override | 2 |
| 57 | 1001130696 | Decal, Control Valve LH | 1 |
| 58 | 1001156279 | Indicator, 6 Degree Inclinometer | 4 |
| 59 | 1001156079 | Bar | 2 |
| 60 | 1001156186 | Plug | 16 |
| 61 | 7120000047 | Screw, #4-40NC x 0.62” | 8 |
| 62 | 7660040000 | Nut, #4-40NC | 4 |

Eastern wrecker sales, Inc.
Clayton, NC 919-553-4038
www.easternwrecker.com

## CONTROLS INSTALLATION - 9 SECTION

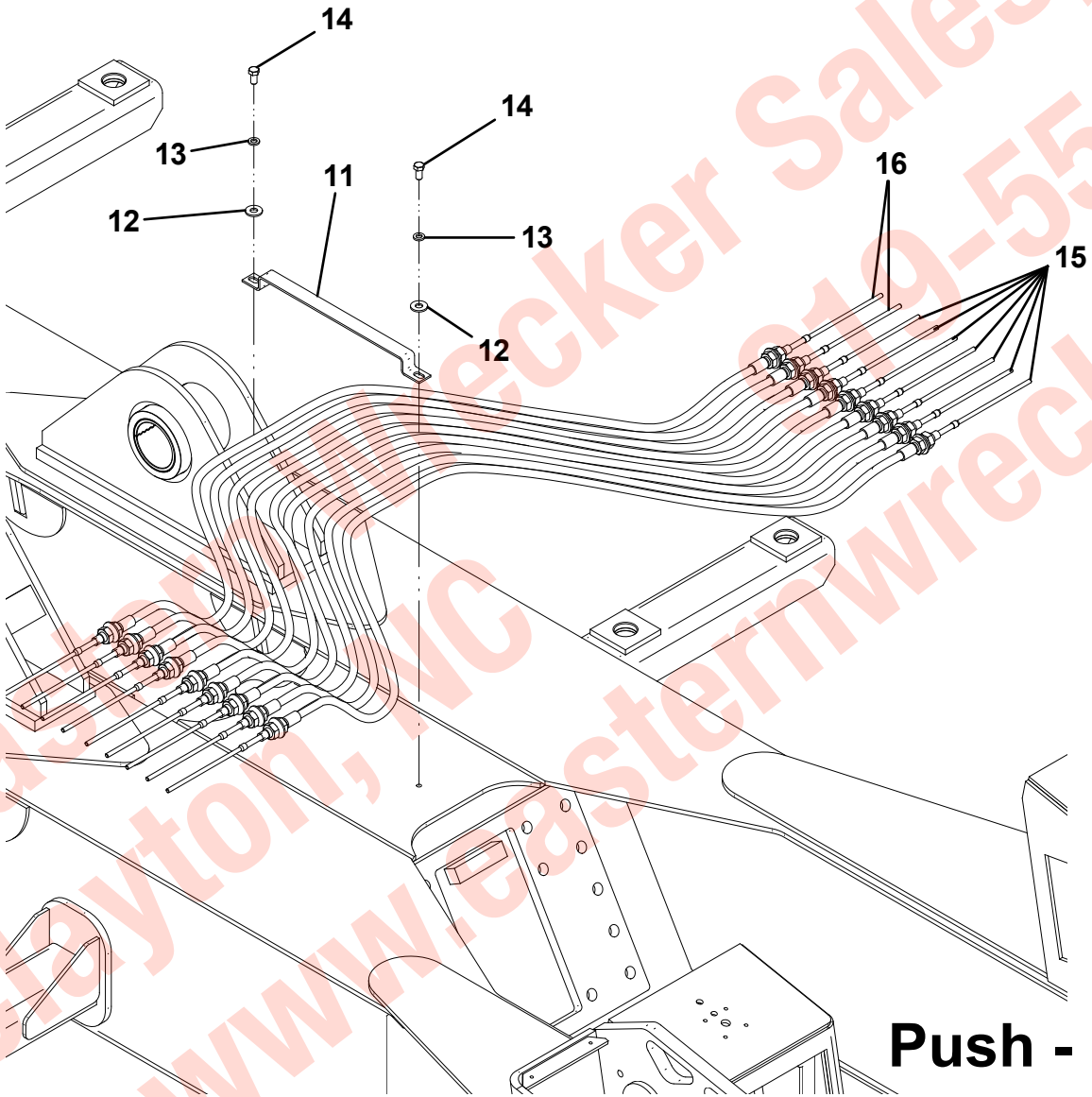


**Push - Pull Cables**

Eastern Wrecker Sales, Inc.
Clayton, NC 919-553-4038
www.easternwrecker.com

## CONTROLS INSTALLATION - 9 SECTION

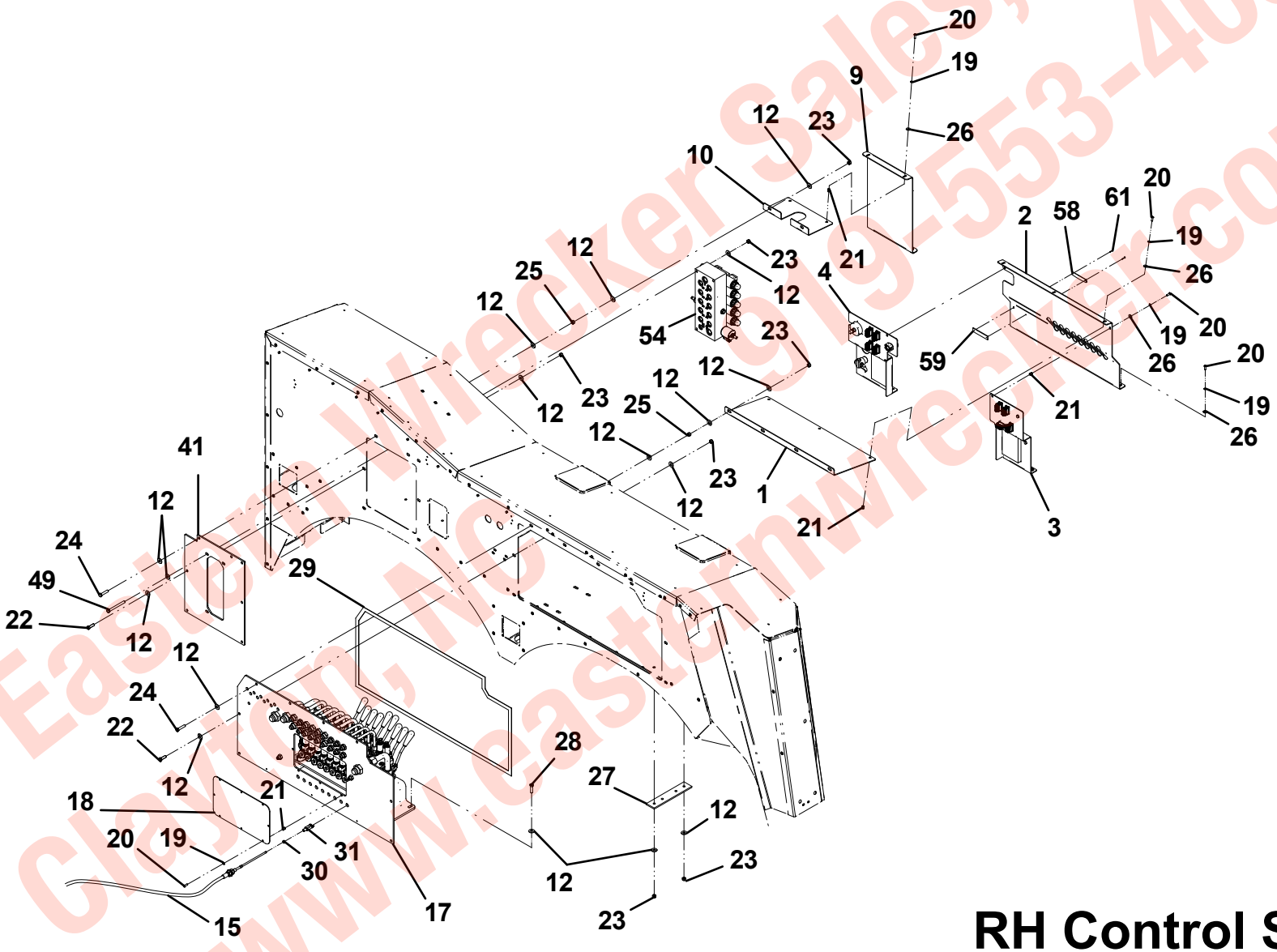


# RH Control Station

Eastern Wrecker Sales, Inc.
Clayton, NC 919-553-4038
www.easternwrecker.com

## CONTROLS INSTALLATION - 9 SECTION

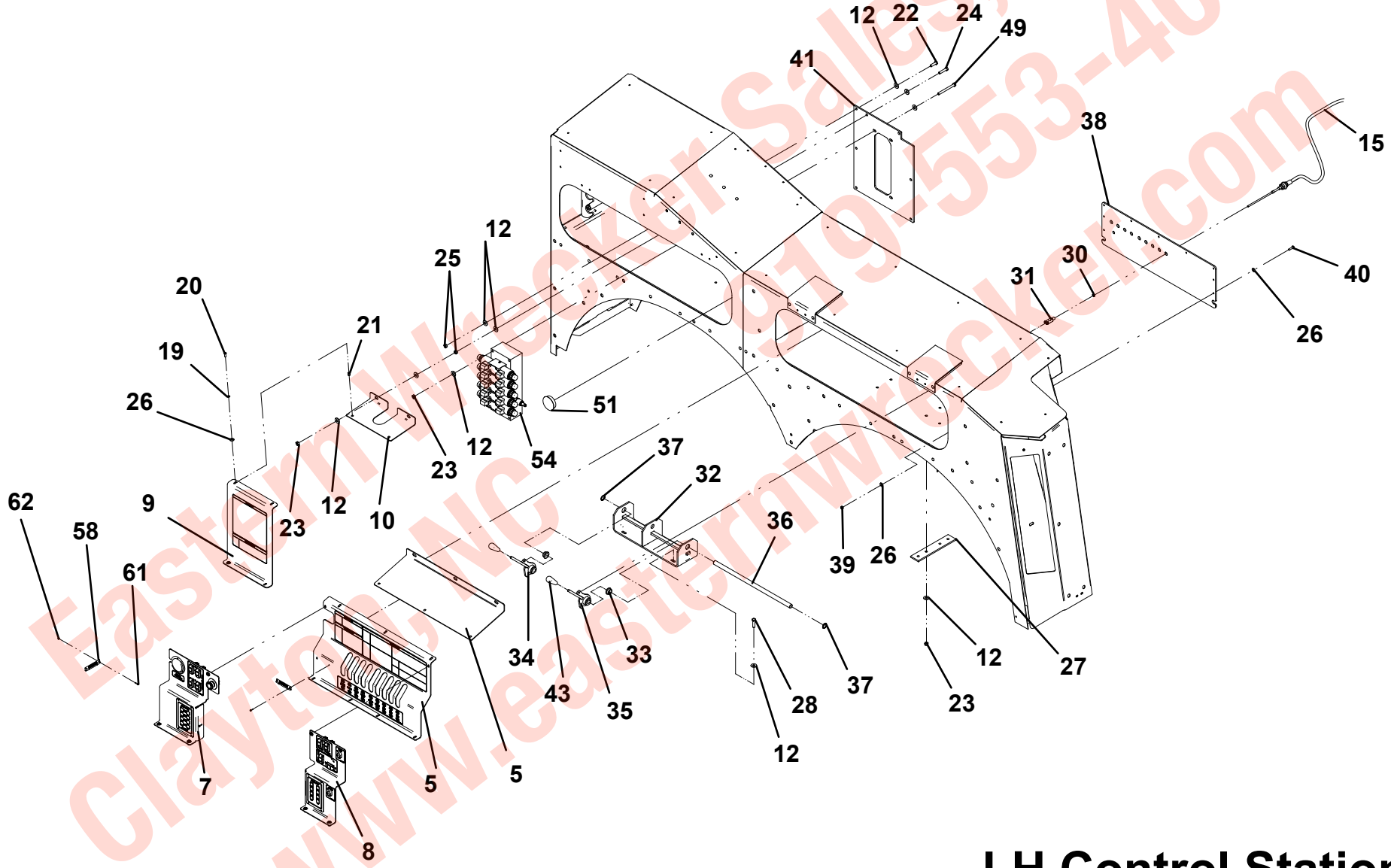


# LH Control Station

Eastern Wrecker Sales, Inc.
Clayton, NC 919-553-4038
www.easternwrecker.com

## CONTROLS INSTALLATION - 9 SECTION

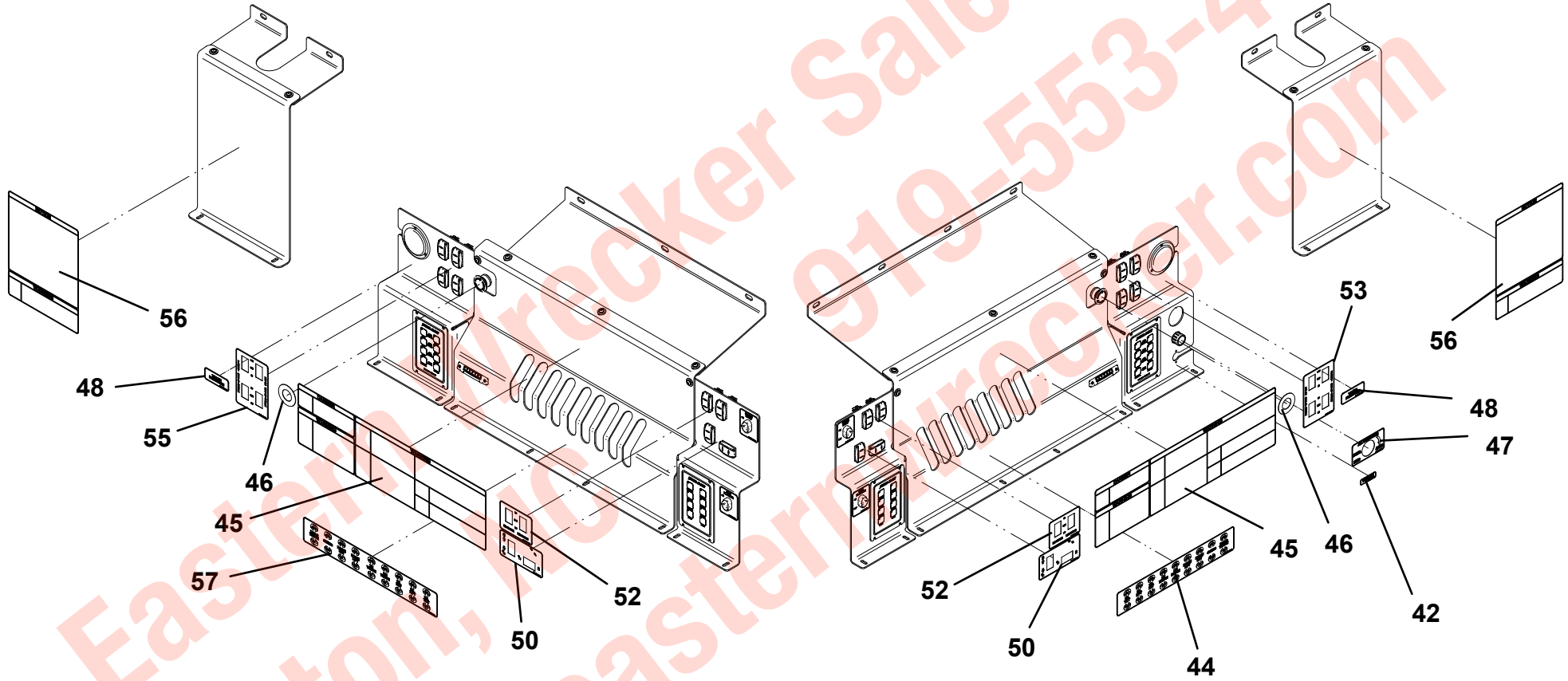


LH Control Station

RH Control Station

Eastern Wrecker Sales, Inc.
Clayton, NC 919-553-4038
www.easternwrecker.com

THIS PAGE INTENTIONALLY LEFT BLANK

Eastern Wrecker Sales, Inc.
919-553-4038
Clayton, NC
www.easternwrecker.com

## OUTRIGGER CONTROLS INSTALLATION

| ITEM | PART NO. | DESCRIPTION | QTY |
|---|---|---|---|
| 1 | 1001134691 | Harness, LH | 1 |
| 2 | 1001134690 | Harness, RH | 1 |
| 3 | 1001134727 | Harness, Cross Over | 1 |
| 4 | 1001136270 | Switch, Rocker Momentary | 12 |
| 5 | 7740000003 | Relay | 1 |
| 6 | 7114100618 | Capscrew, #10-24NC x 0.75” | 1 |
| 7 | 7660102601 | Nut, #10-24NC | 1 |
| 8 | 1001144012 | Harness | 2 |

Eastern Wrecker Sales, Inc.
919-553-4038
Clayton, NC
www.easternwrecker.com

# OUTRIGGER CONTROLS INSTALLATION

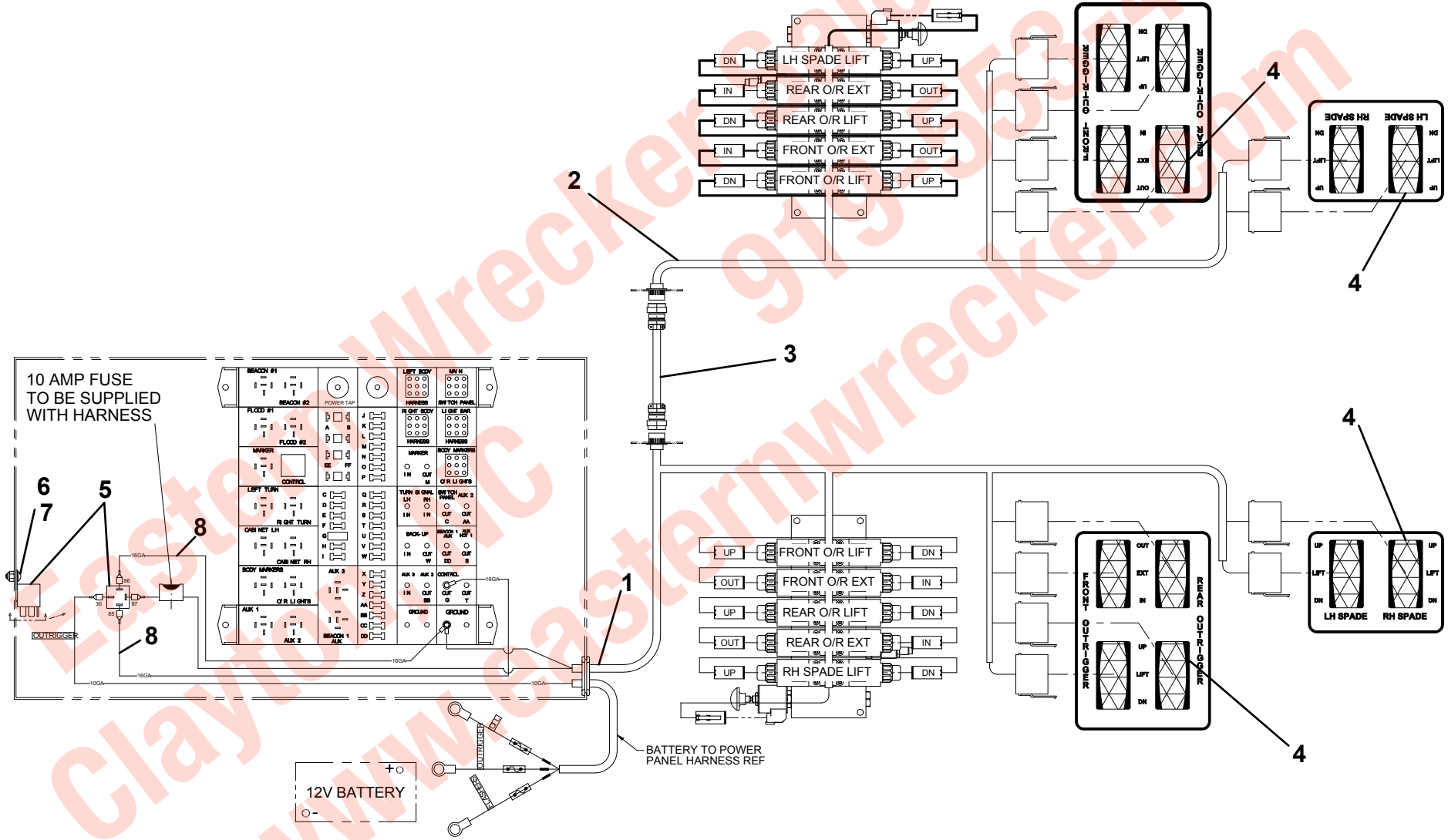


Eastern Wrecker Sales, Inc.
Clayton, NC
919-553-4038
www.easternwrecker.com

## OUTRIGGER CONTROLS INSTALLATION

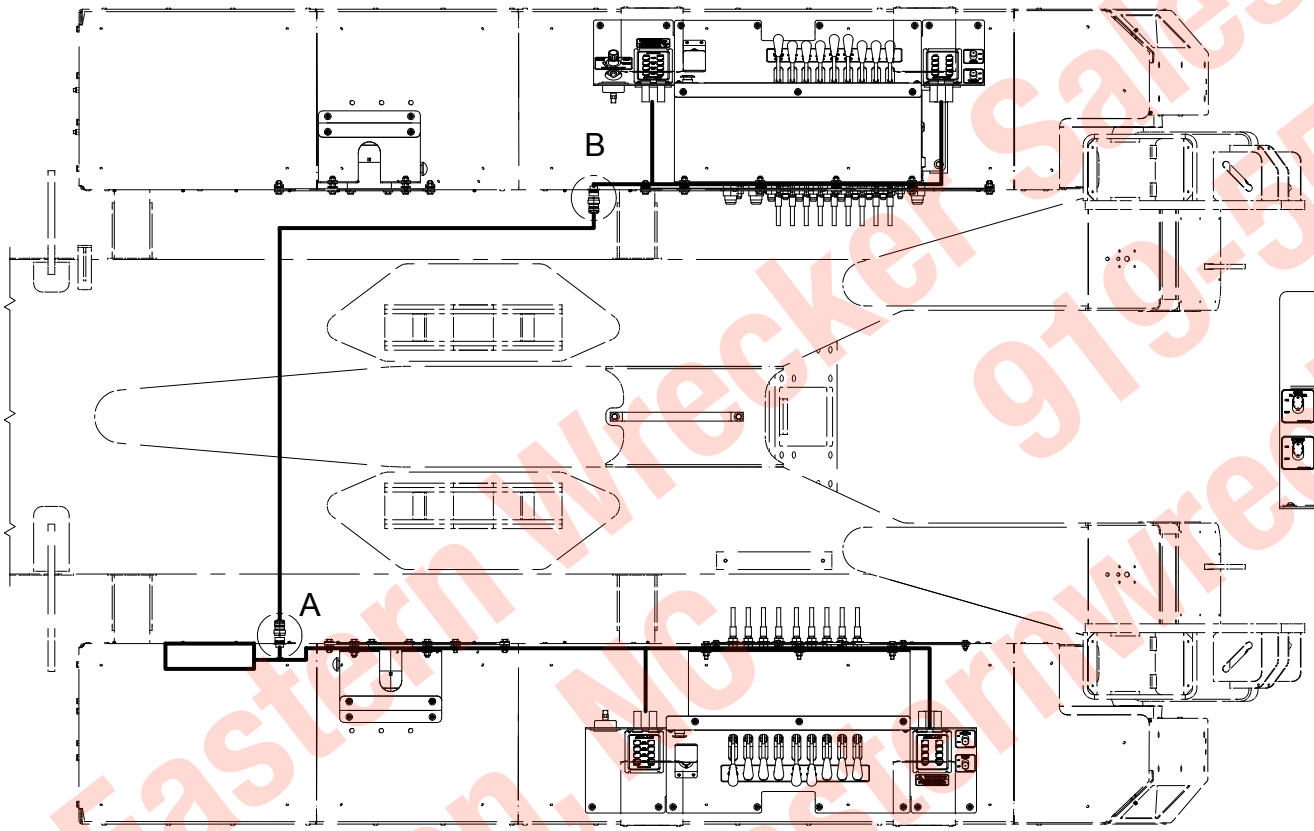


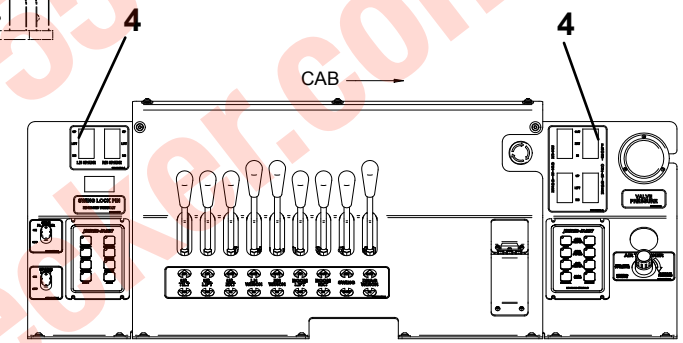


PASSENGER SIDE CONTROL STATION

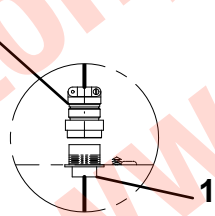


DETAIL A

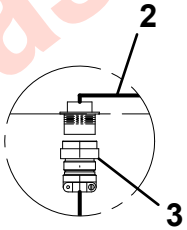


DETAIL B

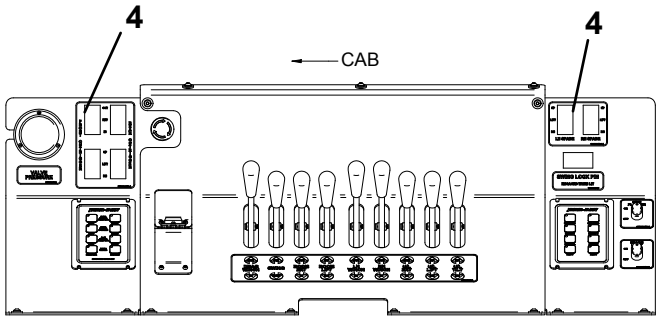


DRIVER SIDE CONTROL STATION

Eastern Wrecker Sales, Inc.
Clayton, NC 919-553-4038
www.easternwrecker.com

THIS PAGE INTENTIONALLY LEFT BLANK

Eastern Wrecker Sales, Inc.
919-553-4038
Clayton, NC
www.easternwrecker.com

## CS24 SERIES PTO INSTALLATION

| ITEM | PART NO. | DESCRIPTION | QTY |
|---|---|---|---|
| 1 | 70050316 | Fuse Assembly | |
| 2 | 70050315 | Butt Splice | |
| 3 | 70050312 | Wire | |
| 4 | 70050314 | Connector | |
| 5 | 70050325 | Grommet | |
| 6 | 70050328 | Wire Harness | |
| 7 | 7870000062 | Pressure Switch | |
| 8 | 70050329 | Elbow | |
| 9 | 70050330 | Nipple | |
| 10 | 70050313 | Terminal | |
| 11 | 70050331 | Connector | |
| 12 | 7706000005 | Switch Bracket | |
| 13 | 7706000001 | Face Plate | |
| 14 | 7870000045 | Switch, 12V | |
| 15 | 70050319 | Bolt Kit | |
| 16 | 7443000431* | Fitting | |
| 17 | 7443000244* | Fitting | |
| 18 | 70050468* | Hose | |

* Also available as Hose Kit - 70050467

Eastern Wrecker Sales, Inc.
919-553-4038
Clayton, NC
www.easternwrecker.com

## CS24 SERIES PTO INSTALLATION

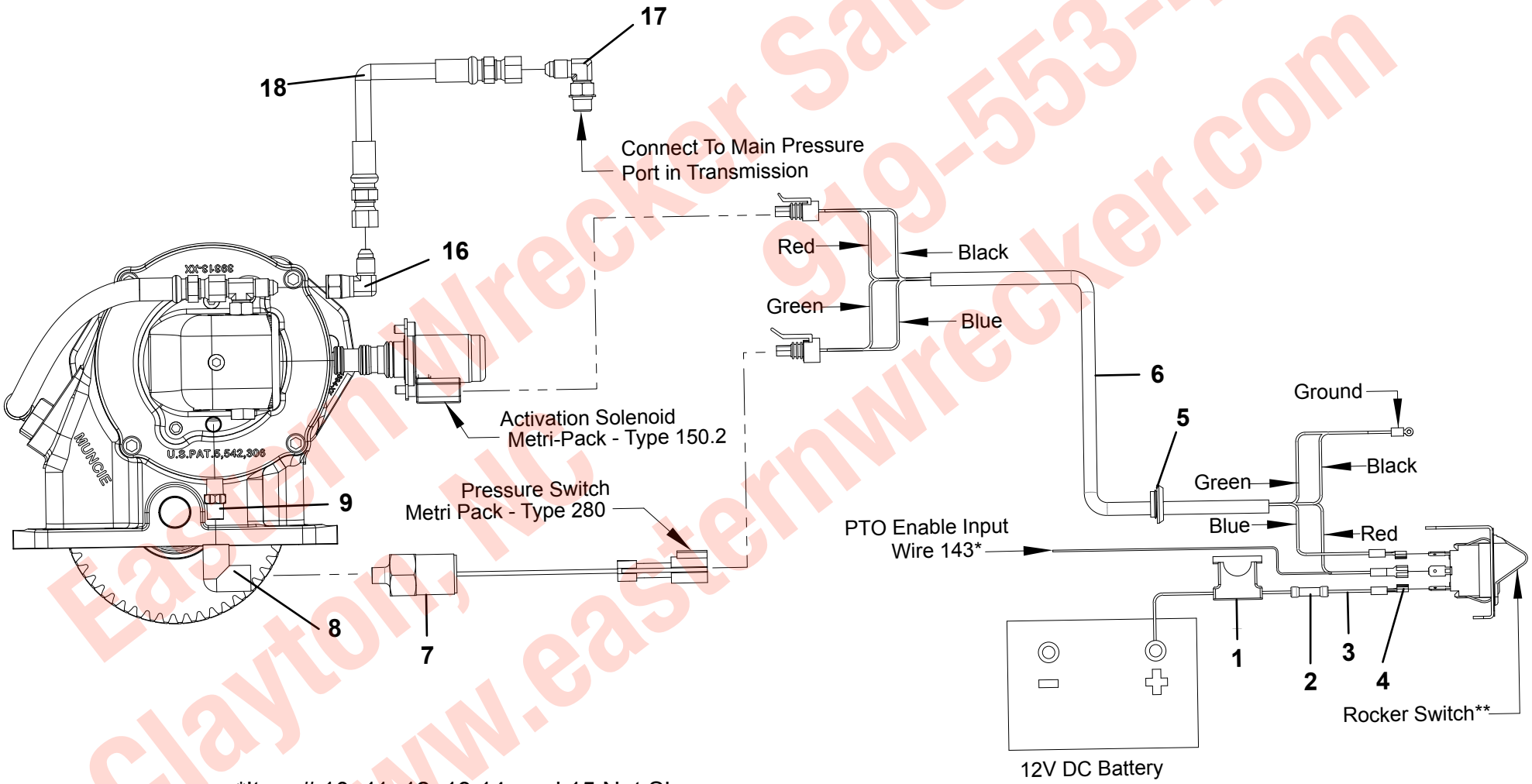


*Item # 10, 11, 12, 13 14, and 15 Not Shown

Eastern Wrecker Sales, Inc.
Clayton, NC 919-553-4038
www.easternwrecker.com

## 82 SERIES PTO INSTALLATION

| ITEM | PART NO. | DESCRIPTION | QTY |
|---|---|---|---|
| 1 | 70050308 | Nipple | 1 |
| 2 | 9935740034 | Valve, Pressure Protection | 1 |
| 3 | 70050309 | Fitting | 1 |
| 4 | 7565000019 | Air Tubing - 30Ft | 1 |
| 5 | 70050310 | Fitting | 2 |
| 6 | 70050320 | Fitting | 1 |
| 7 | 70050567 | Valve, Air | 1 |
| 8 | 7590000049 | 12V Light | 1 |
| | 70050321 | 24V Light | 1 |
| 9 | 70050316 | Fuse Assembly | 1 |
| 10 | 70050315 | Butt Splice | 3 |
| 11 | 70050312 | Wire | 15 |
| 12 | 70050318 | Connector | 1 |
| 13 | 70050571 | Dash Bracket | 1 |
| 14 | 70050573 | Face Plate | 1 |
| 15 | 70050319 | Bolt Kit | 1 |

* Also all available as Installation Kit - 9577760232

Eastern Wrecker Sales, Inc.
Clayton, NC
919-553-4038
www.easternwrecker.com

## 82 SERIES PTO INSTALLATION

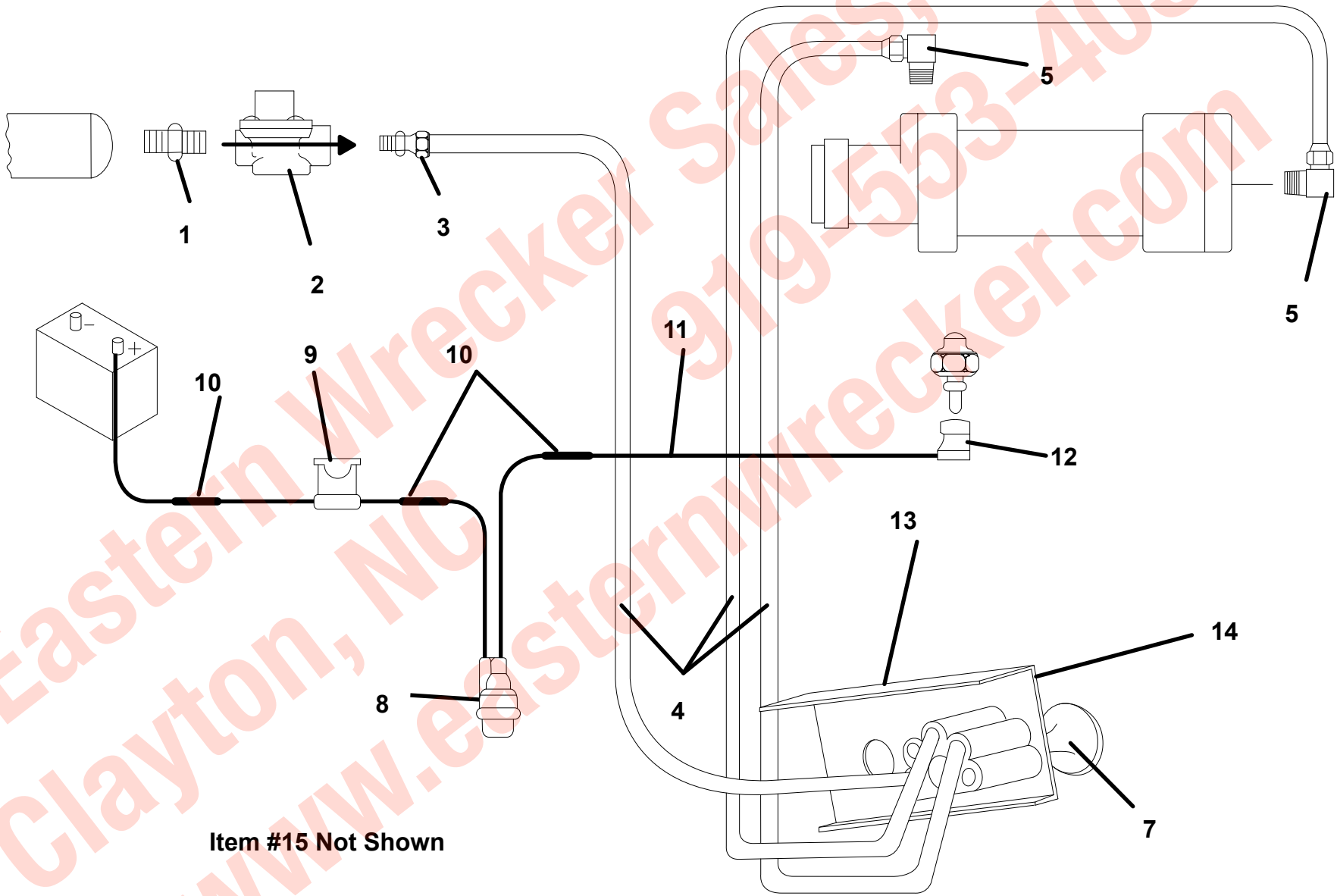


Item #15 Not Shown

Eastern Wrecker Sales, Inc.
Clayton, NC 919-553-4038
www.easternwrecker.com

## WIRELESS REMOTE INSTALLATION

| ITEM | PART NO. | DESCRIPTION | QTY |
|---|---|---|---|
| 1 | 1001143542 | Control, Wireless 16 Function | 1 |
| 2 | 7295000146 | Control, Wireless 6 Function | 1 |
| 3 | 1001130891 | Harness | 1 |
| 4 | 7115141250 | Capscrew, 0.25”-20NC x 1.50” | 2 |
| 5 | 7950140161 | Flatwasher, 0.25” ID | 12 |
| 6 | 7660142601 | Locknut, 0.25”-20NC | 10 |
| 7 | 7790100856 | Screw, #10 x 0.50” | 6 |
| 8 | 7114100518 | Capscrew, #10-24NC x 0.62” | 4 |
| 9 | 7660102604 | Locknut, #10-24NC | 4 |
| 10 | 4178000699 | Bracket | 1 |
| 11 | 7111140813 | Screw, 0.25”-20NC x 1.00” | 4 |
| 12 | 8632000012 | Trim Lock | 2.5ft |
| 13 | 3314000010 | Cover Plate | 2 |
| 14 | 7111140613 | Screw, 0.25”-20NC x 0.75” | 4 |
| 15 | 7493000020 | Grommet | 2 |
| 16 | 7894000004 | Tie Strap | 1 |
| 17 | 5526000553 | Tie Strap | 5 |
| 18 | 7661000023 | Locknut, #10-32NF | 2 |
| 19 | 7740000001 | Relay, 40 Amp | 1 |
| 20 | 7457000006 | Fuse, 15 Amp | 1 |
| 21 | 7075000006 | Battery, D 1.5V | 3 |
| 22 | 7075000003 | Battery, 9V | 1 |
| 23 | 7120000047 | Screw, #4-40NC x 0.62” | 2 |
| 24 | 7660040000 | Nut, #4-40NC | 2 |

| ITEM | PART NO. | DESCRIPTION | QTY |
|---|---|---|---|
| | | **CONTROLLER SERVICE PARTS** | |
| | | | |
| | | 1001143542 - Control, Wireless 16 Function | |
| | 1001143565 | Receiver | 1 |
| | 1001143564 | Transmitter | 1 |
| | 9295310061 | Antenna Kit | 1 |
| | 9552310033 | Tether - 25 Ft | 1 |
| | | | |
| | | 7295000146 - Control, Wireless 6 Function | |
| | 9295310027 | Transmitter | 1 |
| | 9295310029 | Transmitter Rubber Boot | 1 |
| | 9295310030 | Transmitter Belt Clip | 1 |
| | 9295310031 | Transmitter Battery Retainer | 1 |
| | 9295310068 | Receiver | 1 |
| | 9295310069 | Antenna Kit | 1 |

Eastern Wrecker Sales, Inc.
Clayton, NC
919-553-4038
www.easternwrecker.com

# WIRELESS REMOTE INSTALLATION

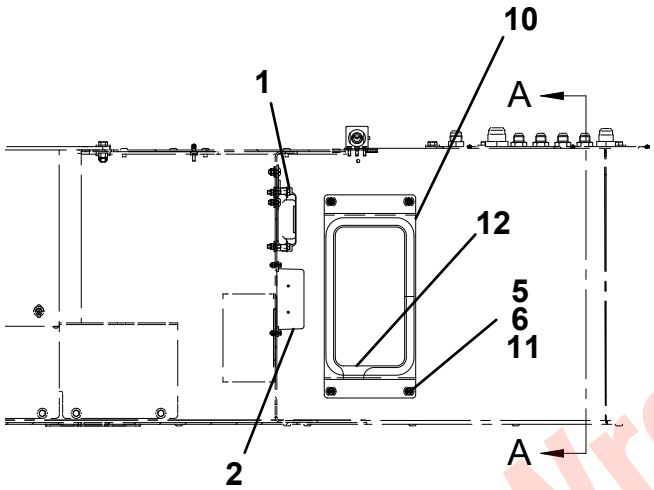


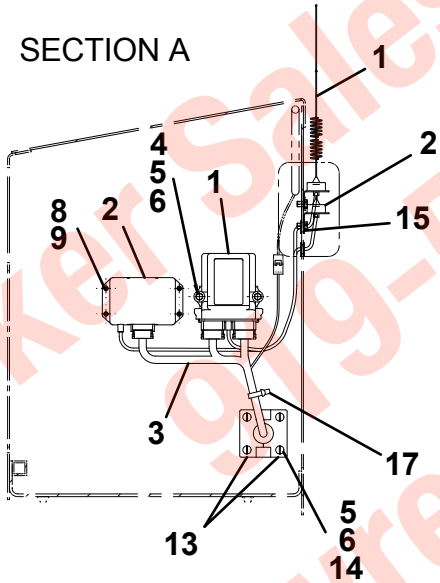


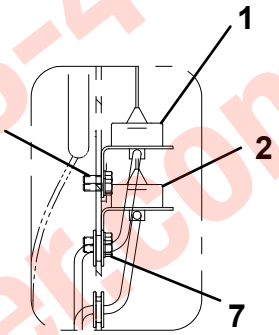


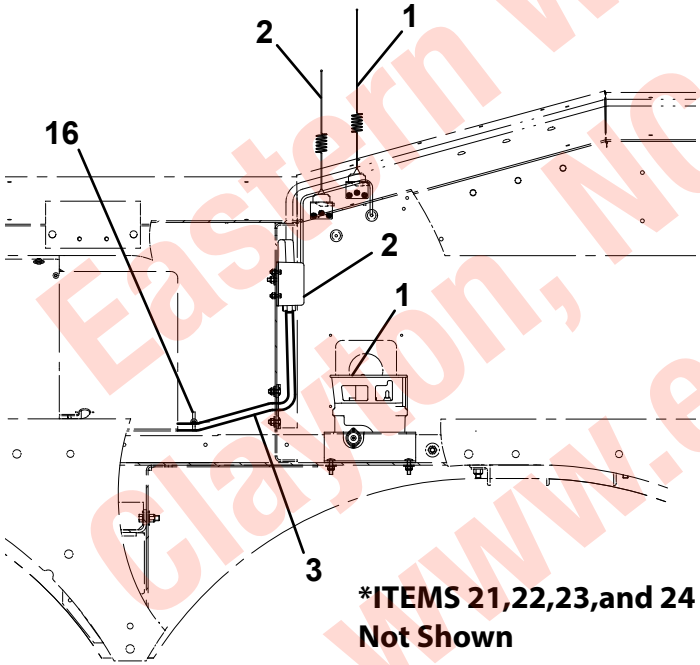


***ITEMS 21,22,23,and 24 Not Shown**

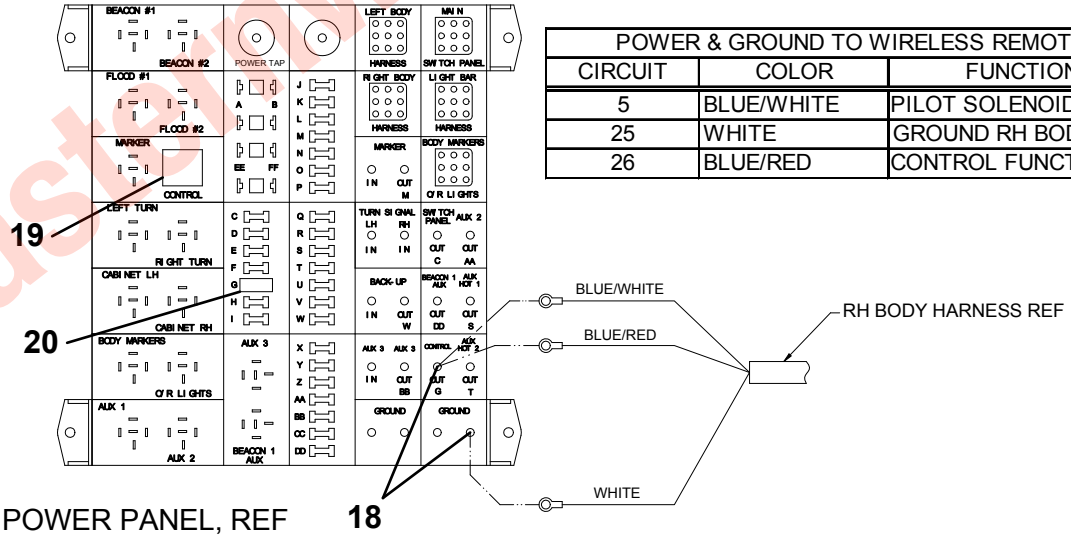


POWER PANEL, REF

| POWER & GROUND TO WIRELESS REMOTE | | |
|---|---|---|
| CIRCUIT | COLOR | FUNCTION |
| 5 | BLUE/WHITE | PILOT SOLENOID |
| 25 | WHITE | GROUND RH BODY |
| 26 | BLUE/RED | CONTROL FUNCTION |

Eastern Wrecker Sales, Inc.
919-553-4038
Clayton, NC
www.easternwrecker.com

## AIR INSTALLATION

| ITEM | PART NO. | DESCRIPTION | QTY |
|---|---|---|---|
| 1 | 7443000154 | Bushing | 1 |
| 2 | 7443000155 | Fitting | 1 |
| 3 | 7443000156 | Nipple | 1 |
| 4 | 7935000120 | Valve, Pressure Protection Valve | 1 |
| 5 | 7443000175 | Fitting | 2 |
| 6 | 7565000014 | Airline Tubing, 0.38” OD | 30ft |
| 7 | 7446502518 | Fitting, Bulkhead | 1 |
| 8 | 7312000017 | Coupling, Quick Disconnect | 1 |
| 9 | 7444020013 | Plug | 1 |
| 10 | 7443000139 | Fitting | 4 |
| 11 | 7470000006 | Gauge, Air Pressure | 1 |
| 12 | 7443000396 | Fitting | 1 |
| 13 | 7443000397 | Fitting | 1 |
| 14 | 7295000029 | Air Regulator | 1 |
| 15 | 7661000041 | Panel | 1 |
| 16 | 7443000243 | Fitting | 1 |
| 17 | 7443000178 | Union, Bulkhead | 4 |
| 18 | 7443000270 | Fitting | 2 |
| 19 | 7443000173 | Fitting | 6 |
| 20 | 7443000448 | Fitting | 1 |
| 21 | 7443000148 | Bushing | 2 |
| 22 | 7444030037 | Plug | 4 |
| 23 | 7565000016 | Airline Tubing, 0.25” | 200ft |
| 24 | 1001129800 | Air Valve | 2 |
| 25 | 4706006033 | Plate | 1 |
| 26 | 7114150818 | Capscrew, 0.31”-18NC x 1.00” | 4 |
| 27 | 7950150143 | Flatwasher, 0.31”ID | 16 |
| 28 | 7660152604 | Locknut, 0.31”-18NC | 12 |
| 29 | 7443000329 | Fitting | 4 |
| 30 | 7115150850 | Capscrew, 0.31”-18NC x 1.00” | 4 |
| 31 | 7660150001 | Nut, 0.31”-18NC | 4 |
| 32 | 7115151250 | Capscrew, 0.31”-18NC x 1.50” | 4 |
| 33 | 1001135301 | Shield, Air Valve | 1 |

Eastern Wrecker Sales, Inc.
Clayton, NC
919-553-4038
www.easternwrecker.com

## AIR INSTALLATION

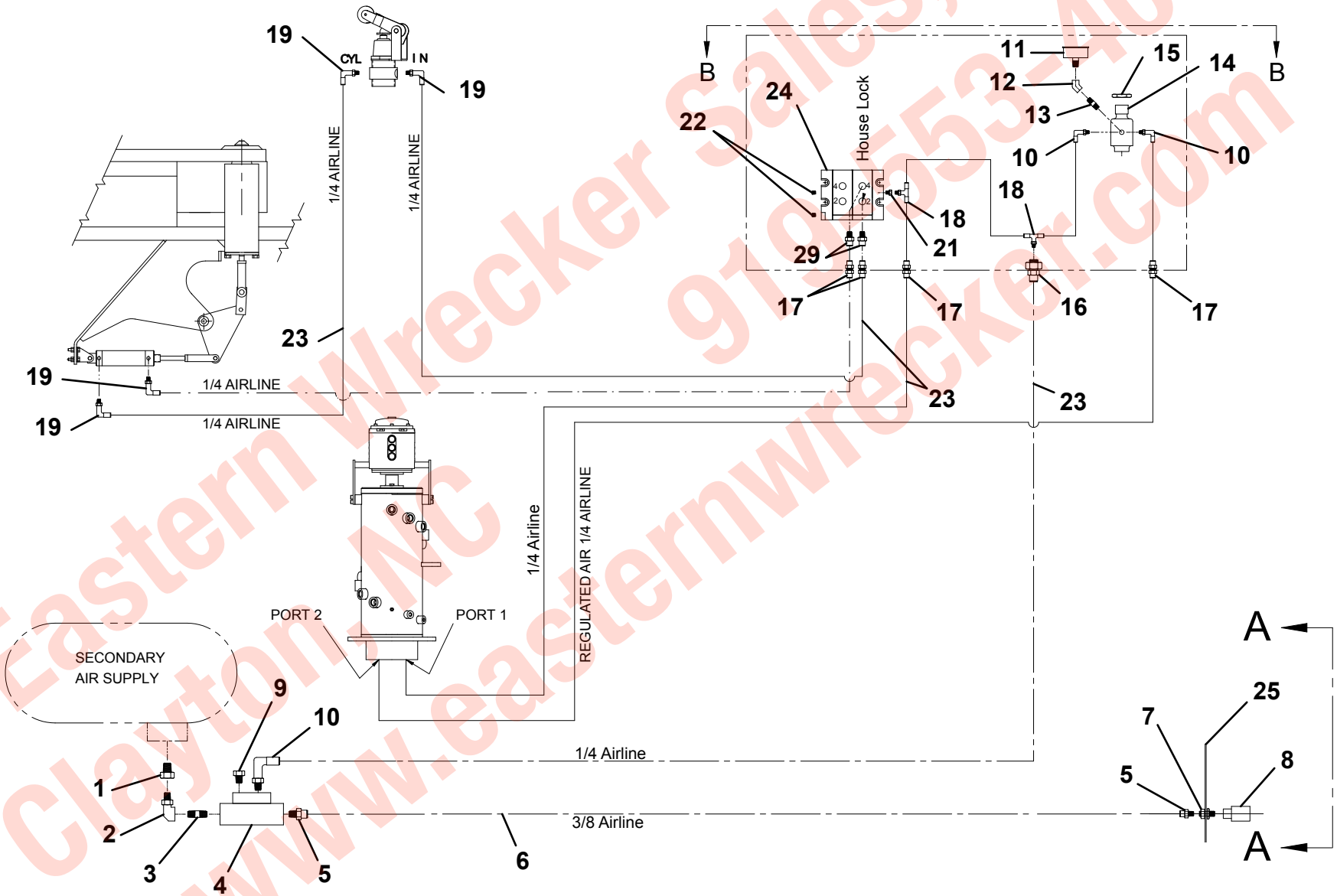


Eastern Wrecker Sales, Inc.
Clayton, NC
919-553-4038
www.easternwrecker.com

## AIR INSTALLATION

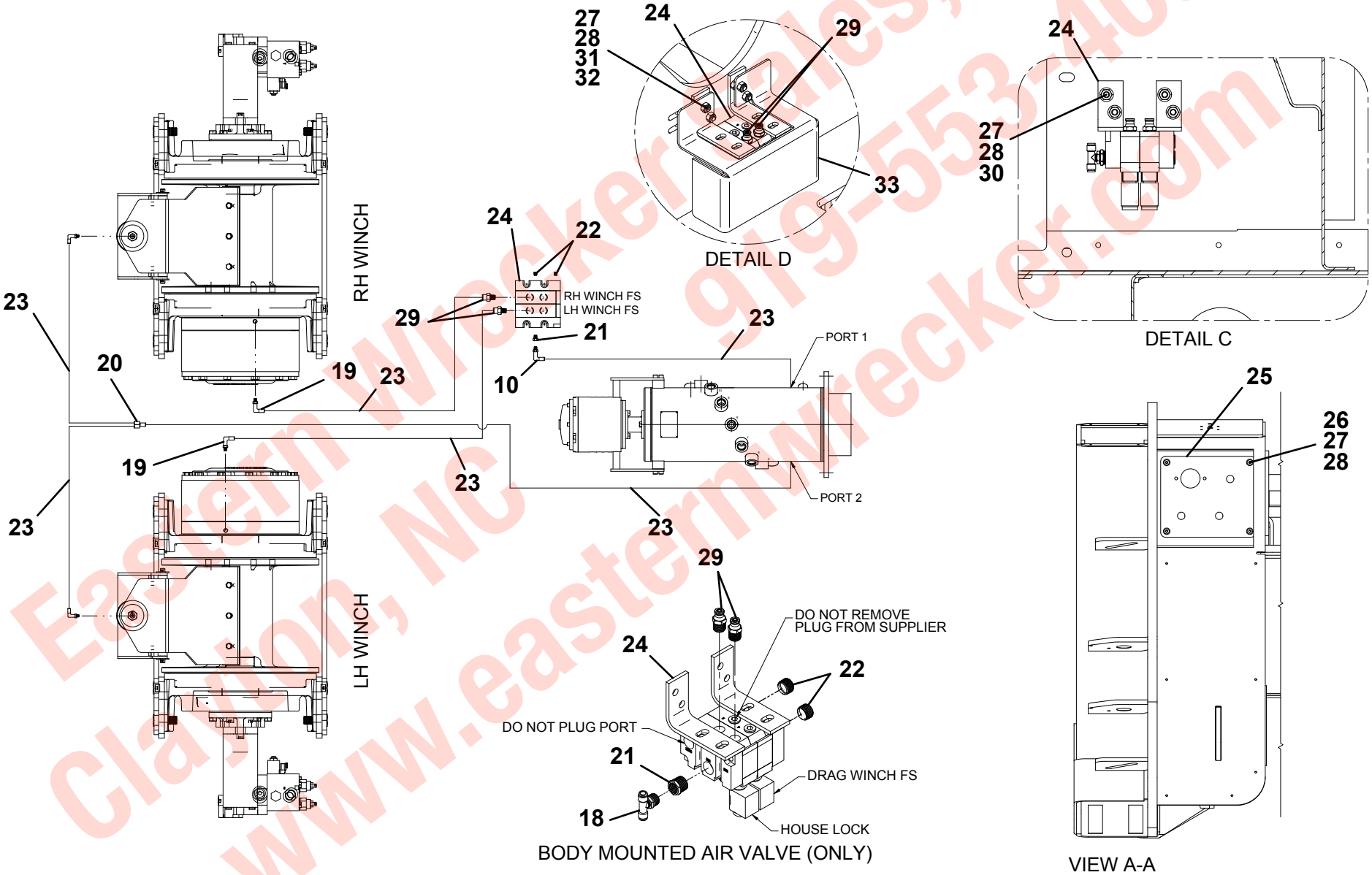


Eastern Wrecker Sales, Inc.
Clayton, NC 919-553-4038
www.easternwrecker.com

THIS PAGE INTENTIONALLY LEFT BLANK

Eastern Wrecker Sales, Inc.
919-553-4038
Clayton, NC
www.easternwrecker.com

## AIR VALVE - 1001129800

| ITEM | PART NO. | DESCRIPTION | QTY |
|---|---|---|---|
| 1 | 70050526 | Kit, Stacking | 1 |
| 2 | 70050527 | Valve | 2 |
| 3 | 70050528 | Coil | 2 |
| 4 | 70050529 | Kit, Mounting Bracket | 1 |
| 5 | 70050530 | Kit, Spool Seal | 2 |

Eastern Wrecker Sales, Inc.
919-553-4038
Clayton, NC
www.easternwrecker.com

## AIR VALVE - 1001129800

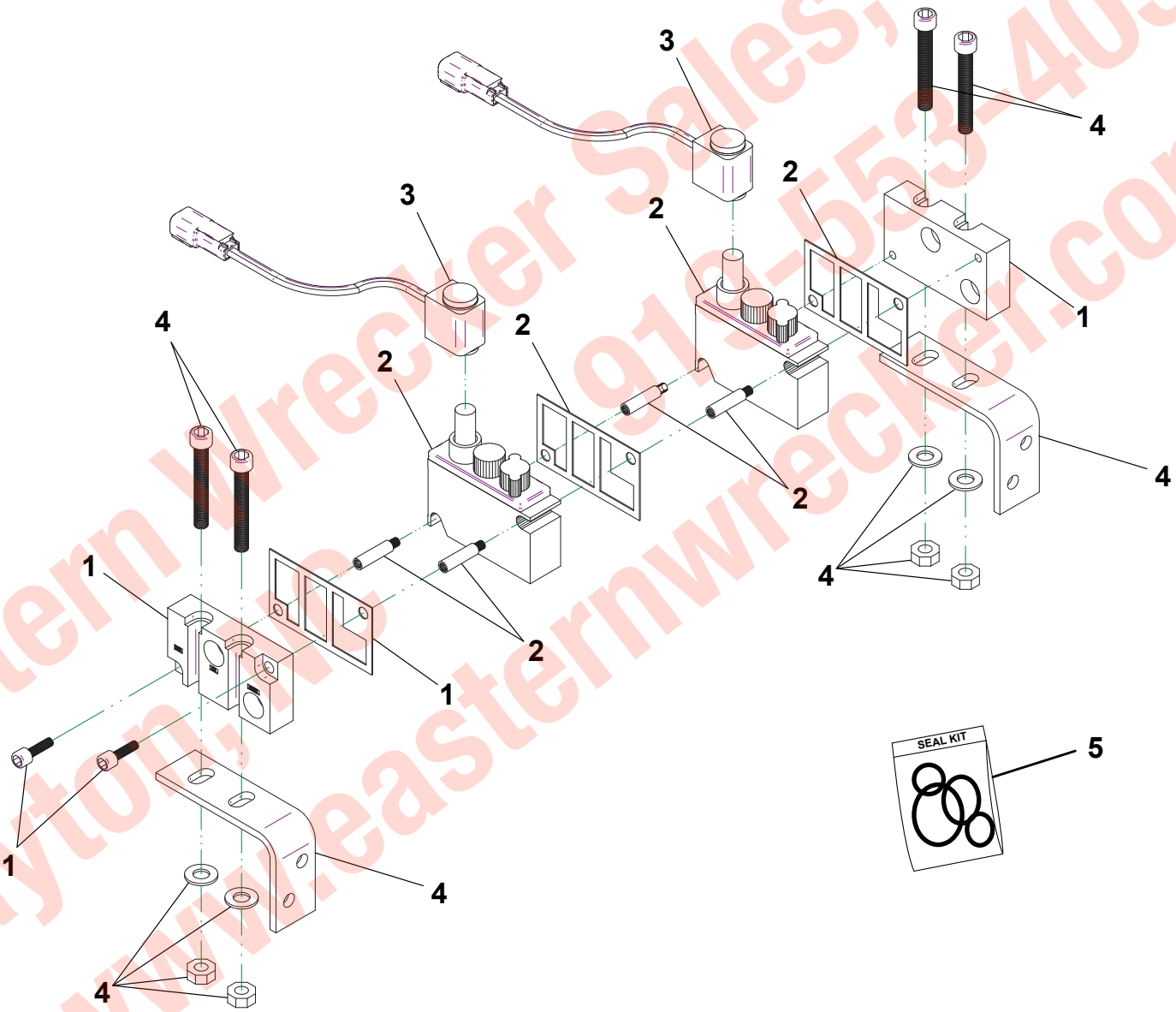


Eastern Wrecker Sales, Inc.
Clayton, NC 919-553-4038
www.easternwrecker.com

## M-PLEX ELECTRICAL INSTALLATION

| ITEM | PART NO. | DESCRIPTION | QTY |
|---|---|---|---|
| 1 | 7552000460 | Harness | 1 |
| 2 | 1001154065 | Harness | 1 |
| 3 | 1001154066 | Harness | 1 |
| 4 | 1001154067 | Harness | 1 |
| 5 | 7552000455 | Harness | 1 |
| 6 | 7552000456 | Harness | 3 |
| 7 | 1001154068 | Harness | 1 |
| 8 | 7661000024 | Nut, #10-24NC | 4 |
| 9 | 7346000039 | Tube, 0.25"ID | 48in |
| 10 | 1001130883 | Harness | 1 |
| 11 | 1001130884 | Harness | 1 |
| 12 | 7740000001 | Relay | 1 |
| 13 | 7457000019 | Fuse | 1 |
| 14 | 1001154073 | Switch | 2 |
| 15 | 1001154074 | Elec Assy, Illuminated Plug | 2 |
| 16 | 7114100418 | Capscrew, #10-24NC x 0.50" | 24 |
| 17 | 7950100103 | Flatwasher, #10 ID | 24 |
| 18 | 7660102604 | Locknut, #10-24NC | 20 |
| 19 | 4686000253 | Panel | 1 |
| 20 | 4686000254 | Panel | 1 |
| 21 | 7790141651 | Screw, 0.25" x 1.00" | 4 |
| 22 | 7950140141 | Flatwasher, 0.25" | 4 |
| 23 | 3740080 | Relay | 2 |
| 24 | 7870000155 | Switch Panel | 1 |
| 25 | 7870000159 | Switch Panel | 1 |
| 26 | 1001135134 | Switch Panel | 1 |
| 27 | 7346000276 | Harness Terminal | 1 |
| 28 | 7346000277 | Harness Terminal | 1 |
| 29 | 1001135089 | Control, Switch Panel | 1 |
| 30 | 1001134354 | Switch Panel | 1 |
| 31 | 1001135136 | Switch Panel | 1 |

Eastern Wrecker Sales, Inc.
Clayton, NC 919-553-4038
www.easternwrecker.com

# M-PLEX ELECTRICAL INSTALLATION

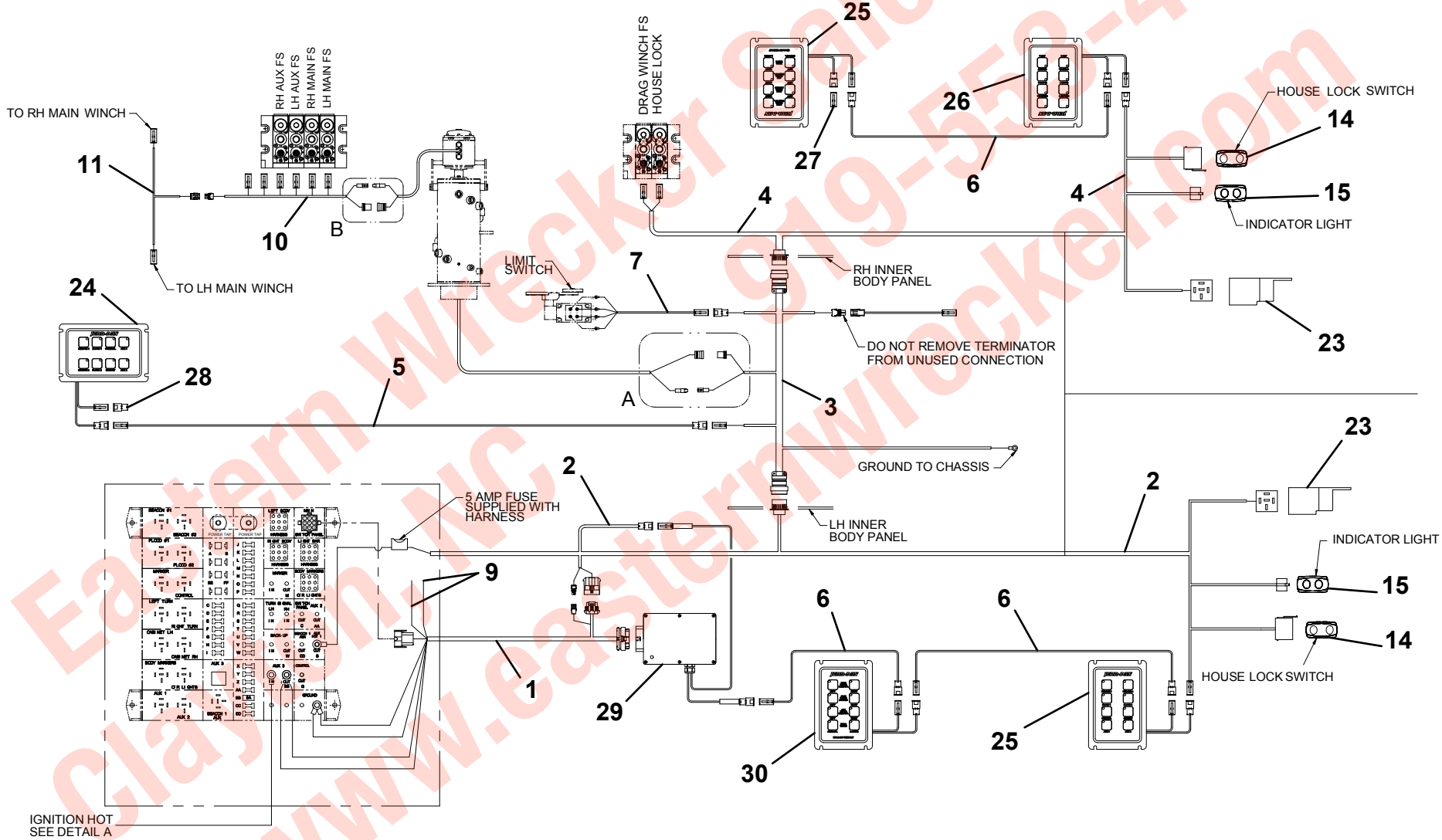


Eastern Wrecker Sales, Inc.
Clayton, NC 919-553-4038
www.easternwrecker.com

## M-PLEX ELECTRICAL INSTALLATION

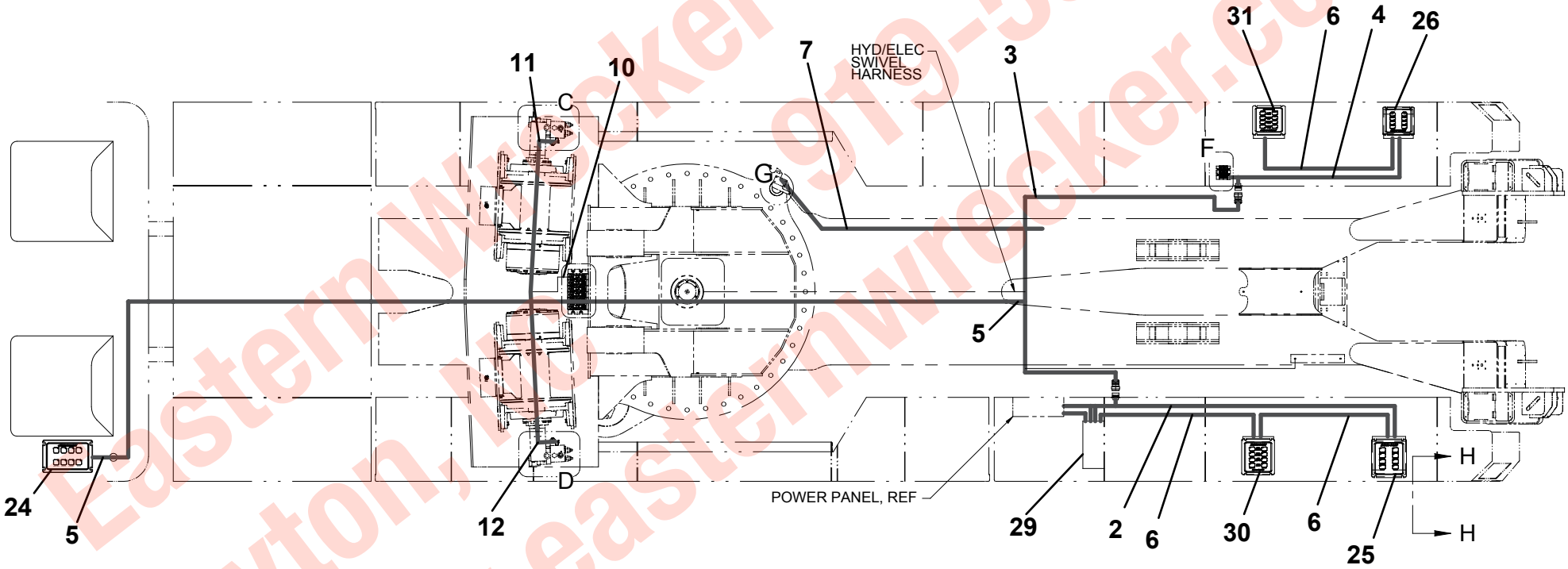


Eastern Wrecker Sales, Inc.
Clayton, NC 919-553-4038
www.easternwrecker.com

# M-PLEX ELECTRICAL INSTALLATION

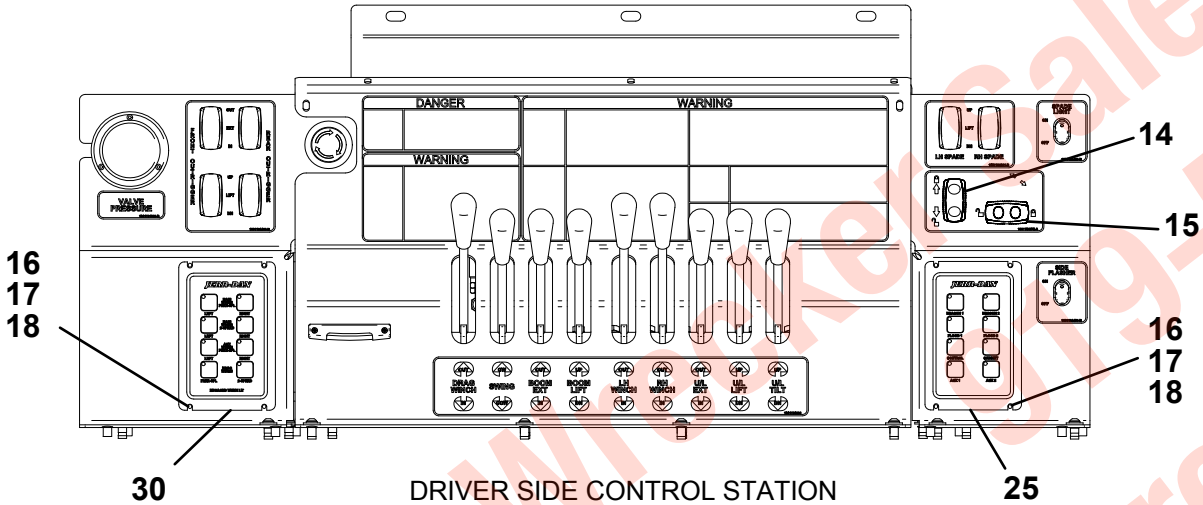


DRIVER SIDE CONTROL STATION

9 SECTION CONTROLS SHOWN; 11 SECTION OPTIONAL

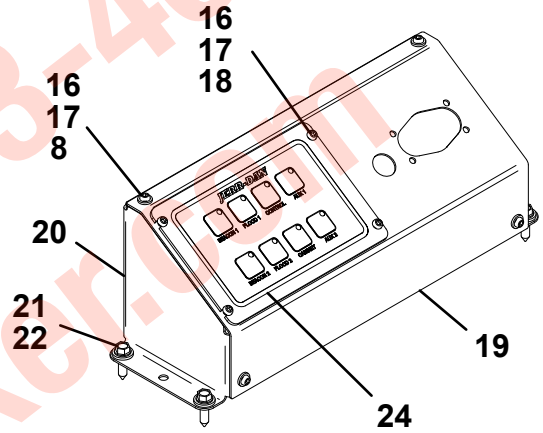


CAB MOUNTED SWITCH PANEL

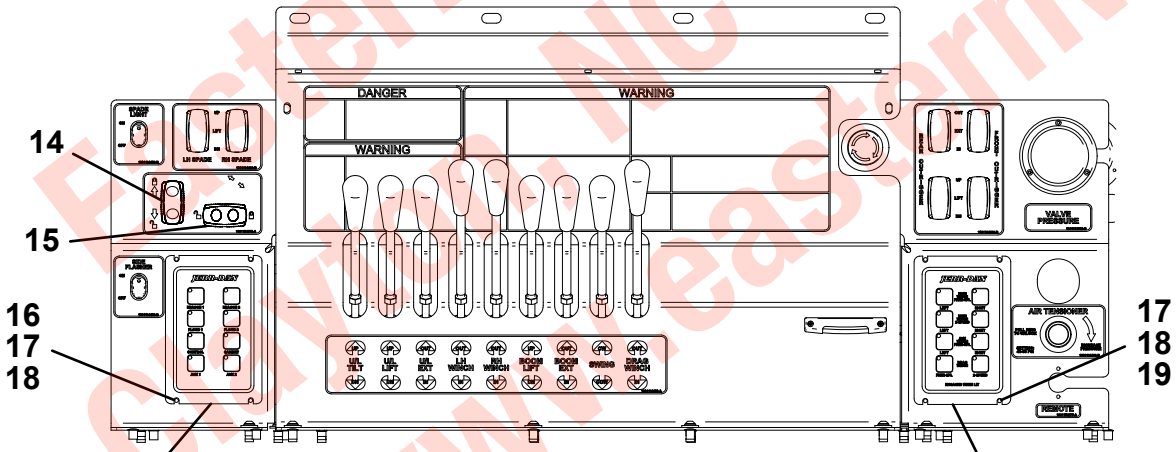


PASSENGER SIDE CONTROL STATION

9 SECTION CONTROLS SHOWN; 11 SECTION OPTIONAL

Eastern Wrecker Sales, Inc.
Olivia, NC
919-553-4038
www.easternwrecker.com

## EMERGENCY STOP INSTALLATION

| ITEM | PART NO. | DESCRIPTION | QTY |
|---|---|---|---|
| 1 | 8977010103 | #16 GA Wire, 2 Conductor | 40ft |
| 2 | 7346000094 | Connector | 1 |
| 3 | 7346000035 | Terminal | 2 |
| 4 | 7346000037 | Cable Seal | 6 |
| 5 | 7346000087 | Connector | 2 |
| 6 | 7346000099 | Terminal | 4 |
| 7 | 8977500100 | #16 GA Wire, Black | .25ft |
| 8 | 7870000128 | Switch, Pushbutton | 2 |
| 9 | 7870000129 | Switch, Contact Block | 2 |
| 10 | 7345001704 | Terminal | 3 |
| 11 | 7346000039 | Tubing | .125ft |
| 12 | 7330000755 | Decal | 2 |
| 13 | 5526000553 | Tie Strap | 1 |

Eastern Wrecker Sales, Inc.
Clayton, NC
919-553-4038
www.easternwrecker.com

# EMERGENCY STOP INSTALLATION

| WHITE WIRE | TERMINAL |
|---|---|
| FROM IGNITION | 21 |
| TO RH SWITCH | 22 |

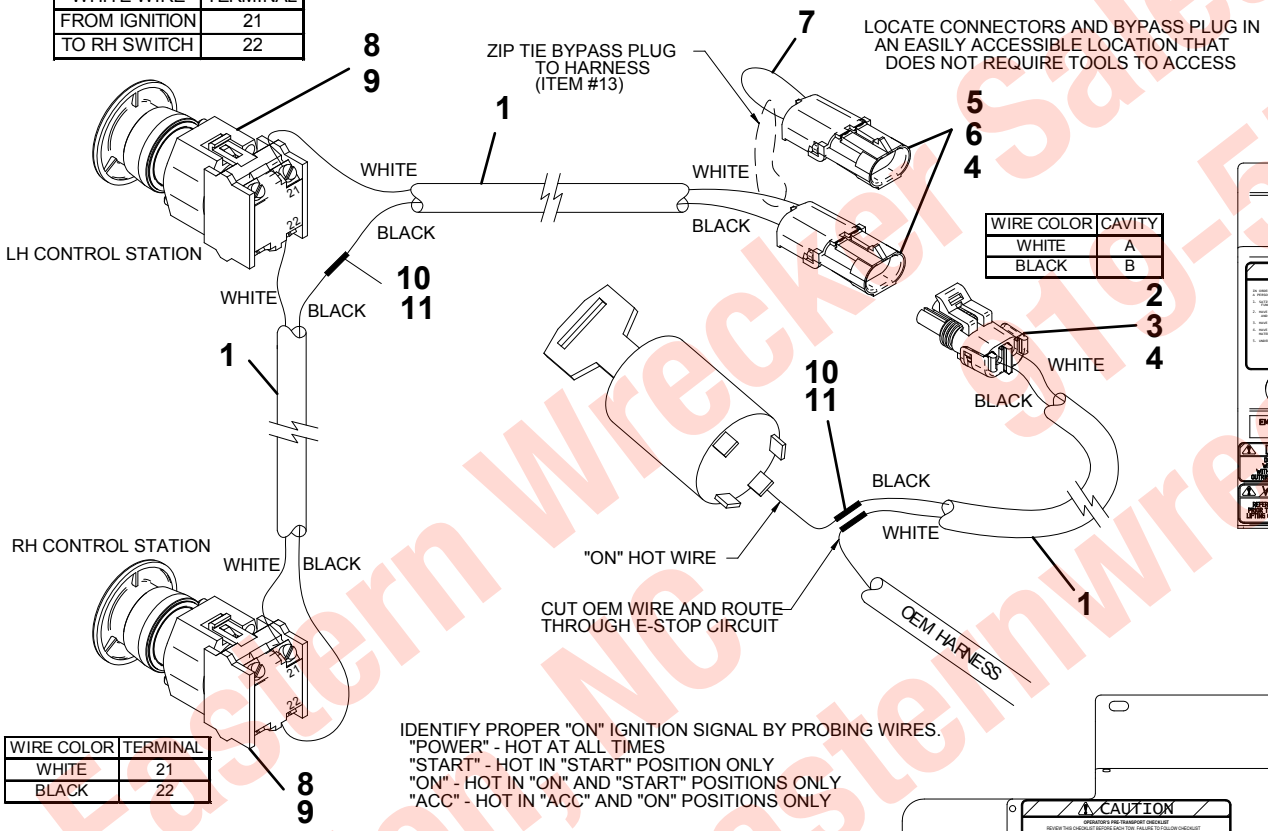


| WIRE COLOR | CAVITY |
|---|---|
| WHITE | A |
| BLACK | B |

| WIRE COLOR | TERMINAL |
|---|---|
| WHITE | 21 |
| BLACK | 22 |

IDENTIFY PROPER "ON" IGNITION SIGNAL BY PROBING WIRES.
"POWER" - HOT AT ALL TIMES
"START" - HOT IN "START" POSITION ONLY
"ON" - HOT IN "ON" AND "START" POSITIONS ONLY
"ACC" - HOT IN "ACC" AND "ON" POSITIONS ONLY

NOTE: SOME TRUCKS MAY HAVE 2 "ON" WIRES. DETERMINE WHICH WIRE POWERS ENGINE CONTROL MODULE. VERIFY WITH ENGINEERING IF UNSURE.

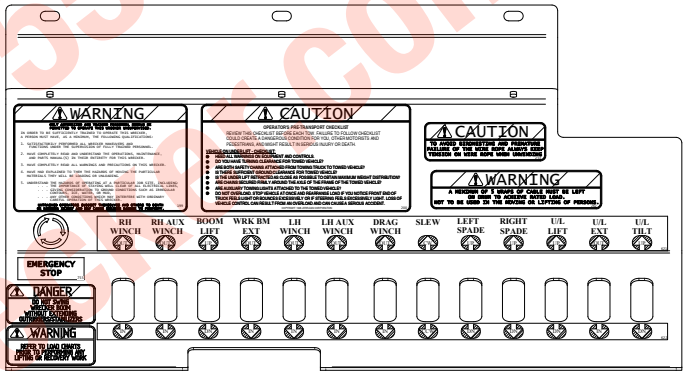


ROTATOR LH CONTROL STATION

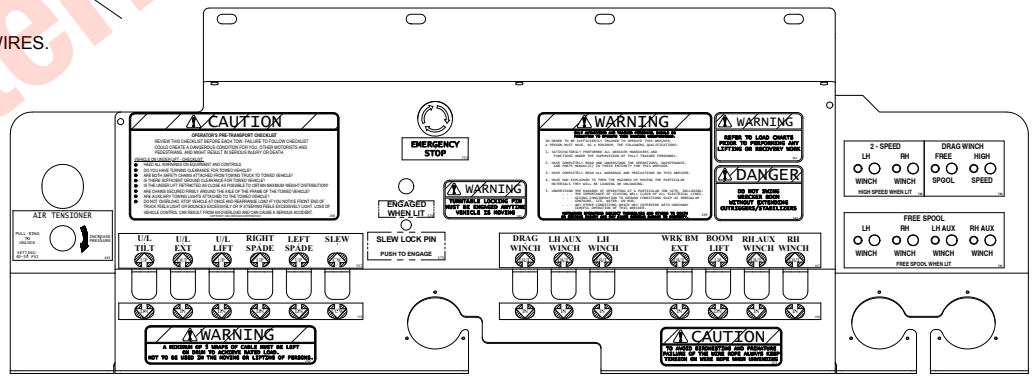


ROTATOR RH CONTROL STATION

Eastern Wrecker Sales, Inc.
Clayton, NC 919-553-4038
www.easternwrecker.com

## HEADBOARD ASSEMBLY - 1001150180

| ITEM | PART NO. | DESCRIPTION | QTY |
|---|---|---|---|
| 1 | 1001150151 | Headboard Bondment | 1 |
| 2 | 1001129818 | Panel, Headboard Cover LH & RH | 2 |
| 3 | 1001129820 | Panel, Headboard Cover Top | 1 |
| 4 | 7661000019 | U-Nut, 0.25”-20NC | 36 |
| 5 | 7950140143 | Flatwasher, 0.25” ID | 36 |
| 6 | 7114140618 | Capscrew, 0.25”-20NC x 0.75” | 36 |

Eastern Wrecker Sales, Inc.
919-553-4038
Clayton, NC
www.easternwrecker.com

## HEADBOARD ASSEMBLY - 1001150180

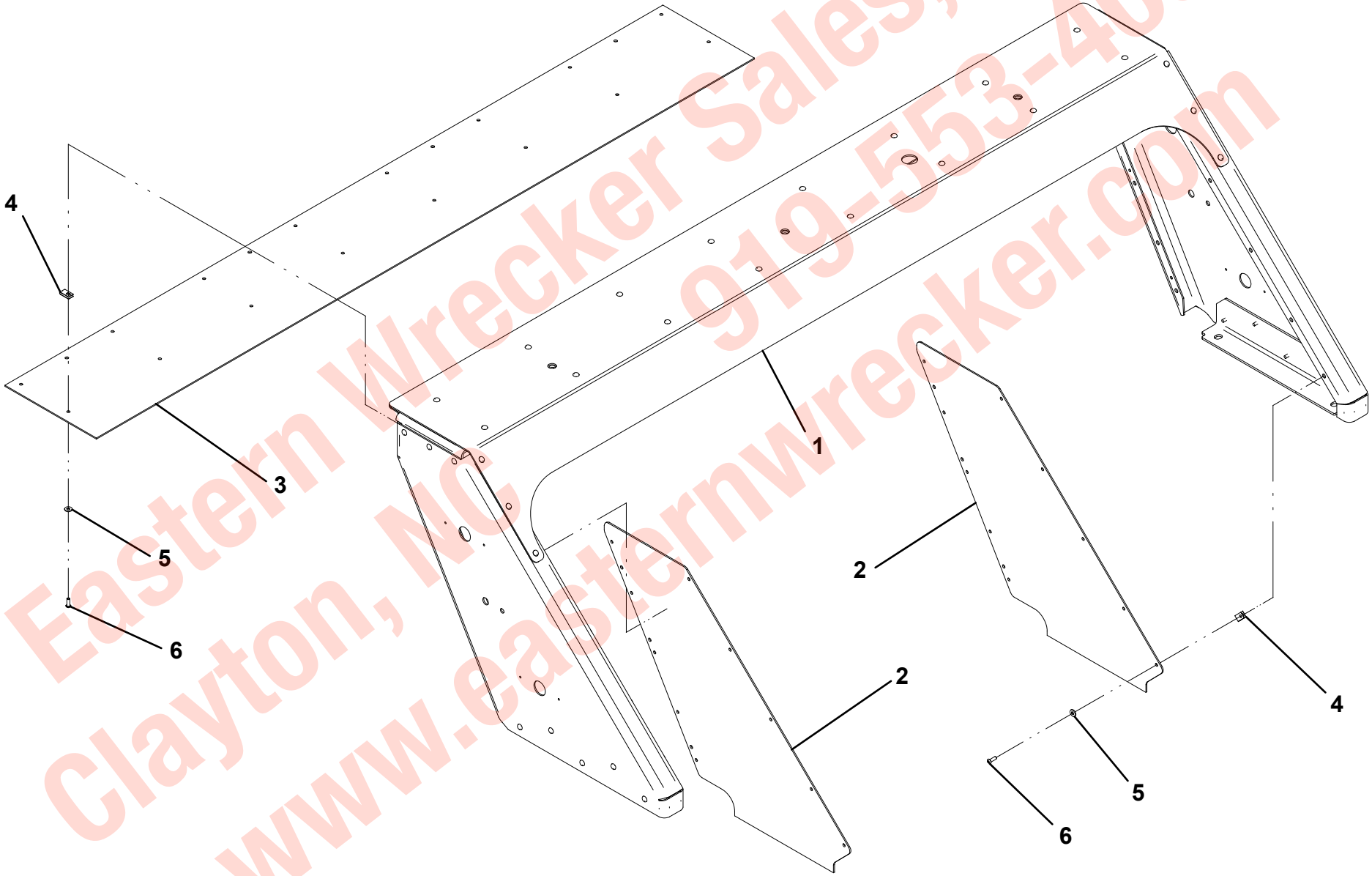


Eastern Wrecker Sales, Inc.
Clayton, NC 919-553-4038
www.easternwrecker.com

## HEADBOARD INSTALLATION - 1001150422

| ITEM | PART NO. | DESCRIPTION | QTY |
|---|---|---|---|
| 1 | 1001150180 | Headboard, Assembly | 1 |
| 2 | 7115181450 | Capscrew, 0.50”-13NC x 1.75” | 4 |
| 3 | 7950180161 | Flatwasher, 0.50” ID | 8 |
| 4 | 7660182601 | Locknut, 0.50”-13NC | 4 |

Eastern Wrecker Sales, Inc.
919-553-4038
Clayton, NC
www.easternwrecker.com

## HEADBOARD INSTALLATION - 1001150422

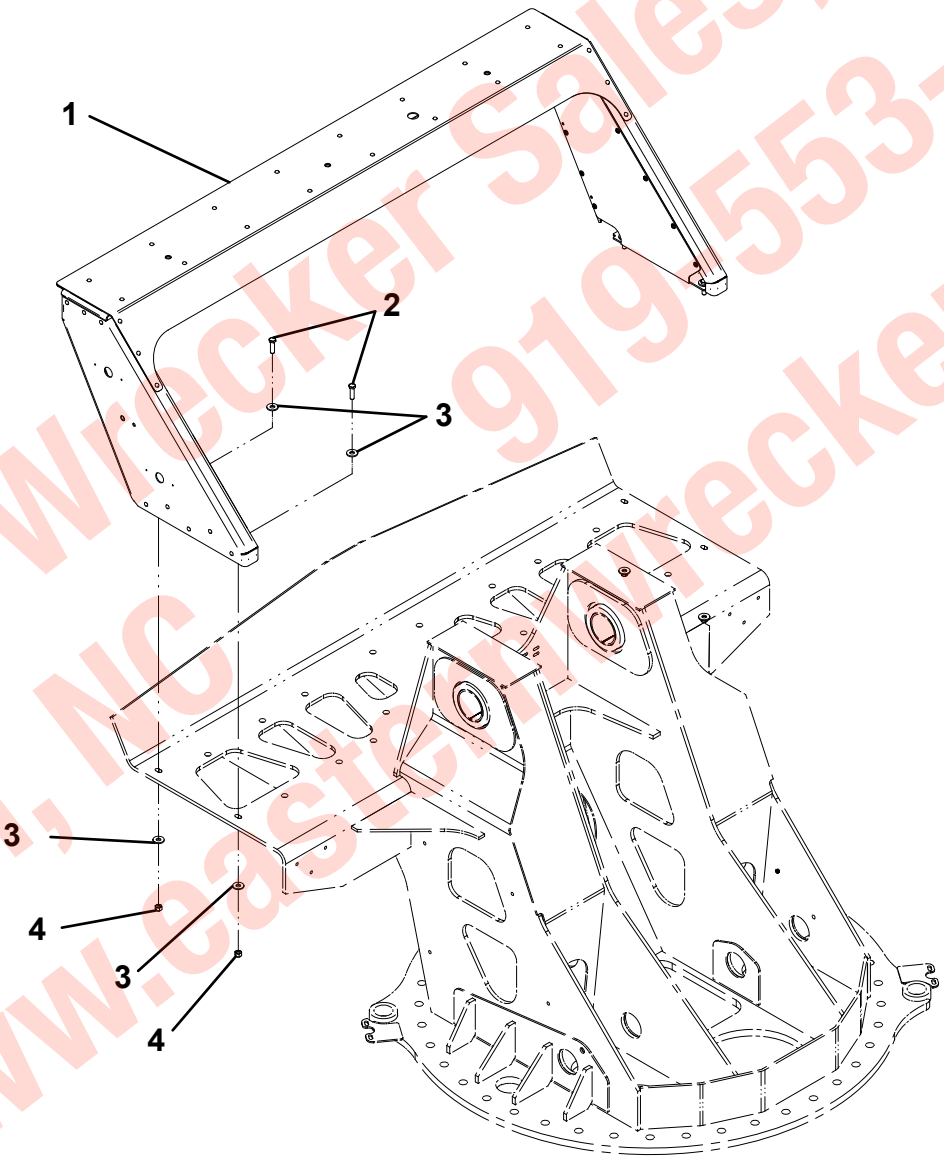


Eastern Wrecker Sales, Inc.
Clayton, NC 919-553-4038
www.easternwrecker.com

## WING LIGHT INSTALLATION - 1001129862

| ITEM | PART NO. | DESCRIPTION | QTY |
|---|---|---|---|
| 1 | 1001129828 | Bracket | 2 |
| 2 | 1001129861 | Light Bar, 22” WHELEN | 2 |
| 3 | 4178000402 | Bracket | 4 |
| 4 | 7115180850 | Capscrew, 0.50”-13NC x 1.00” | 4 |
| 5 | 7949000072 | Washer, 2.00” OD x 0.50” ID | 4 |
| 6 | 7660182601 | Locknut, 0.50”-13NC | 4 |
| 7 | 7115161250 | Bolt, 0.38”-16NC x 1.50” | 6 |
| 8 | 7950160161 | Flatwasher, 0.38” ID | 12 |
| 9 | 7660162601 | Locknut, 0.38”-16NC | 6 |
| 10 | 7894000042 | Tie Strap | 4 |

Eastern Wrecker Sales, Inc.
919-553-4038
Clayton, NC
www.easternwrecker.com

# WING LIGHT INSTALLATION - 1001129862

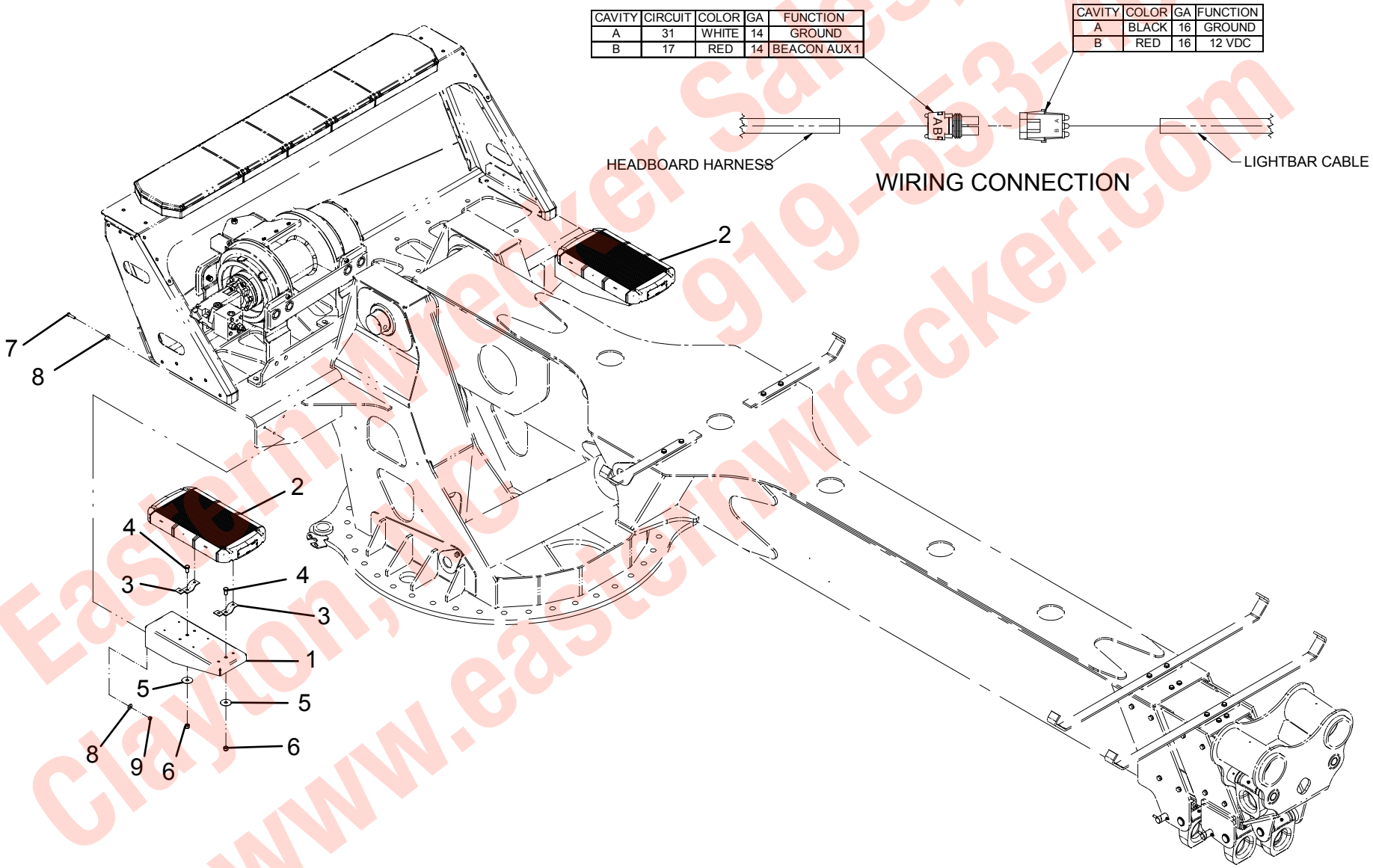


| CAVITY | CIRCUIT | COLOR | GA | FUNCTION |
|---|---|---|---|---|
| A | 31 | WHITE | 14 | GROUND |
| B | 17 | RED | 14 | BEACON AUX 1 |

| CAVITY | COLOR | GA | FUNCTION |
|---|---|---|---|
| A | BLACK | 16 | GROUND |
| B | RED | 16 | 12 VDC |

Eastern Wrecker Sales, Inc.
Clayton, NC 919-553-4038
www.easternwrecker.com

## LIGHTBAR 72” LED - WHELEN

| ITEM | PART NO. | DESCRIPTION | QTY |
|---|---|---|---|
| 1 | 70050392 | Base | 1 |
| 2 | 70050169 | Grommet | 1 |
| 3 | 70050170 | Plug | 2 |
| 4 | 70050163 | Assembly, HC I/O Liberty, Jerr-Dan | 1 |
| 5 | 70050171 | Cable | 1 |
| 6 | 70050172 | Screw, #10-24NC x 1.00” | 1 |
| 7 | 70050393 | Clamp | 1 |
| 8 | 70050174 | Wiznut, #10-24NC | 1 |
| 9 | 70050175 | Housing | 2 |
| 10 | 70050176 | Grommet | 1 |
| 11 | 70050177 | Light Cluster | 1 |
| 12 | 70050178 | Harness | 1 |
| 13 | 70050179 | Screw, #10-32NF x 0.50” | 2 |
| 14 | 70050180 | Washer, #10 ID | 2 |
| 15 | 70050181 | Housing | 1 |
| 16 | 70050182 | Housing | 16 |
| 17 | 70050183 | LR11 TD Single Full 20 Deg. | 2 |
| 18 | 70050394 | Harness | 2 |
| 19 | 70050185 | Harness | 1 |
| 20 | 70050186 | Harness | 1 |
| 21 | 70050187 | Light Assembly, LED | 10 |
| 22 | 70050188 | 500 BTT Max | 2 |
| 23 | 70050189 | Panel | 4 |
| 24 | 70050190 | End Support Bracket | 2 |
| 25 | 70050191 | Insulator | 1 |
| 26 | 70050192 | Decal | 1 |
| 27 | 70050395 | Top Cover | 1 |
| 28 | 70050194 | Screw, #10-24NC x 0.38” | 4 |
| 29 | 70050195 | Spacer | 4 |
| 30 | 70050196 | Corner LED Assembly | 4 |
| 31 | 70050197 | Spacer | 4 |
| 32 | 70050199 | Lens | 6 |
| 33 | 70050200 | Lens | 4 |
| 34 | 70050201 | Lens Divider | 8 |
| 35 | 70050202 | End Cap | 2 |
| 36 | 70050203 | Screw, #10-24NC x 1.25” | 8 |
| 37 | 70050204 | Rotational MTG Adapter | 3 |
| 38 | 70050205 | Label, “Front” | 1 |
| 39 | 70050206 | Label, Jerr-Dan Logo | 1 |
| 40 | 70050207 | Label, Model & Serial Number | 1 |
| 41 | 70050208 | Connector | 1 |
| 42 | 70050209 | Connector | 1 |
| 43 | 70050210 | Connector | 1 |
| 44 | 70050211 | Connector | 1 |

Eastern Wrecker Sales, Inc.
Clayton, NC 919-553-4038
www.easternwrecker.com

# LIGHTBAR 72” LED - WHELEN

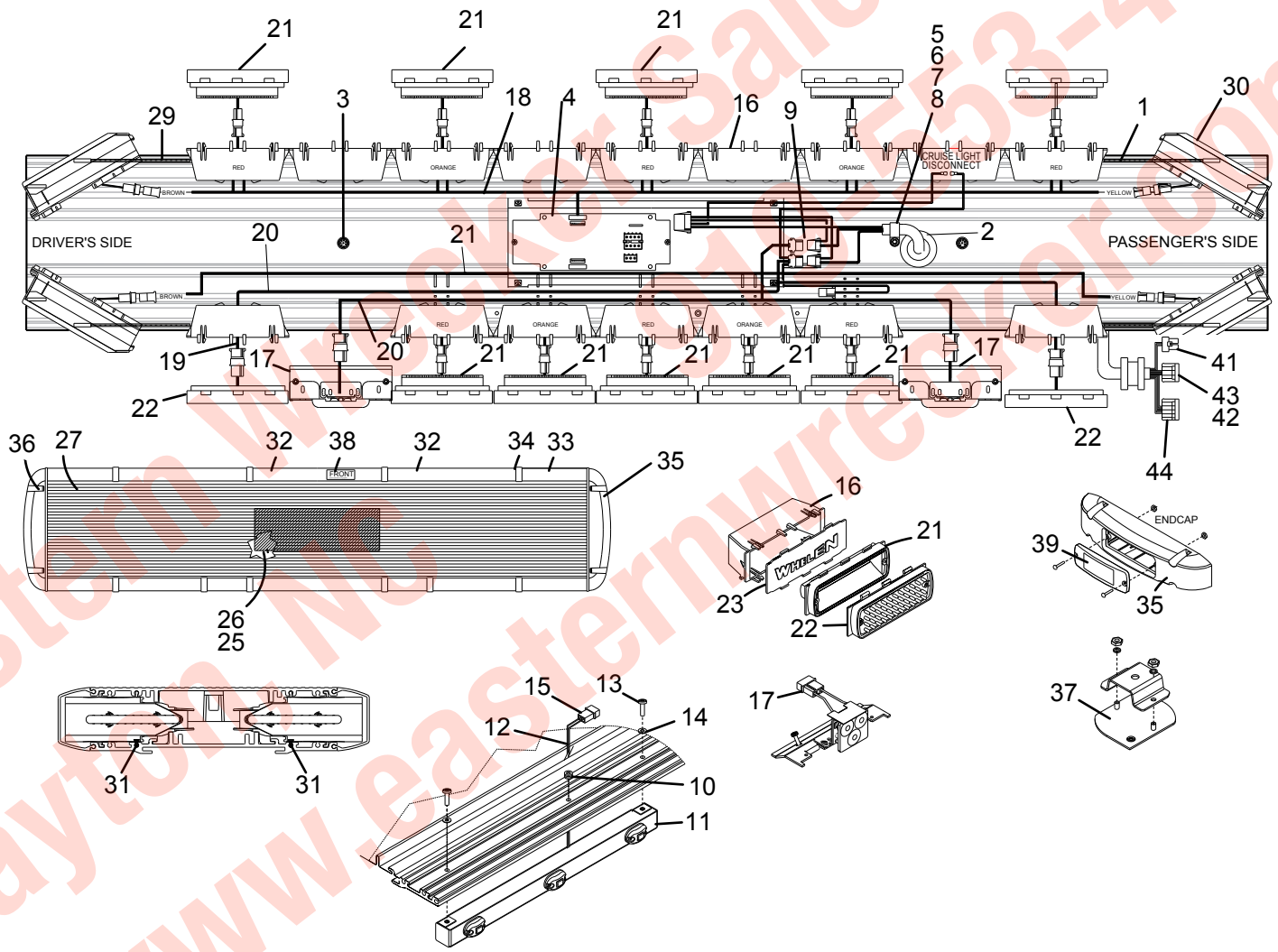


Eastern Wrecker Sales, Inc.
Clayton, NC 919-553-4038
www.easternwreckerr.com

## UPPER HOOK-UP LIGHTS INSTALLATION

| ITEM | PART NO. | DESCRIPTION | QTY |
|---|---|---|---|
| 1 | 1001131171 | Lamp | 2 |
| 2 | 7493000003 | Grommet | 2 |
| 3 | 7115140850 | Capscrew, 0.25”-20NC x 1.00” | 8 |
| 4 | 7950140143 | Flatwasher, 0.25” ID | 8 |
| 5 | 7660142604 | Locknut, 0.25”-20NC | 8 |
| 6 | 7894000010 | Tie Strap | 6 |

Eastern Wrecker Sales, Inc.
919-553-4038
Clayton, NC
www.easternwrecker.com

## UPPER HOOK-UP LIGHTS INSTALLATION

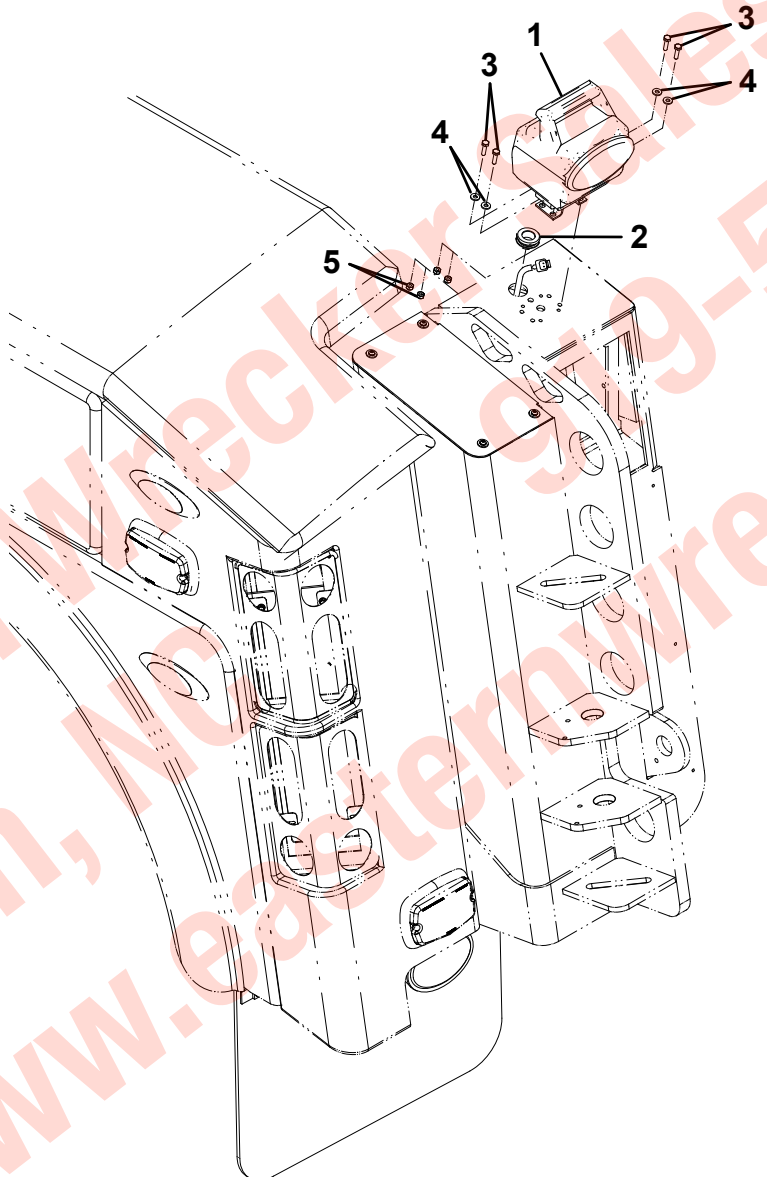


| CAVITY | CIRCUIT | FUNCTION |
|---|---|---|
| 1 | 21 | GROUND |
| 2 | 4 | FLOOD 2 |
| LH BODY | | |

| CAVITY | CIRCUIT | FUNCTION |
|---|---|---|
| 1 | 28 | GROUND |
| 2 | 4 | FLOOD 2 |
| RH BODY | | |

Item #6, Not Shown

Eastern Wrecker Sales, Inc.
Clayton, NC 919-553-4038
www.easternwrecker.com

## LOWER HOOK-UP LIGHTS INSTALLATION

| ITEM | PART NO. | DESCRIPTION | QTY |
|---|---|---|---|
| 1 | 1001131160 | Lamp | 1 |
| 2 | 4178000659 | Bracket | 2 |
| 3 | 7115140850 | Capscrew, 0.25”-20NC x 1.00” | 4 |
| 4 | 7660142601 | Locknut, 0.25”-20NC | 4 |
| 5 | 7950140143 | Flatwasher, 0.25” ID | 8 |
| 6 | 7346000094 | Electrical Connector | 2 |
| 7 | 7346000035 | Electrical Terminal | 4 |
| 8 | 7346000037 | Electrical Seal | 4 |
| 9 | 7274000026 | Clamp | 6 |
| 10 | 8597650002 | Wire Loom | 1ft |
| 11 | 7894000010 | Tie Strap | 6 |

Eastern Wrecker Sales, Inc.
919-553-4038
Clayton, NC
www.easternwrecker.com

## LOWER HOOK-UP LIGHTS INSTALLATION

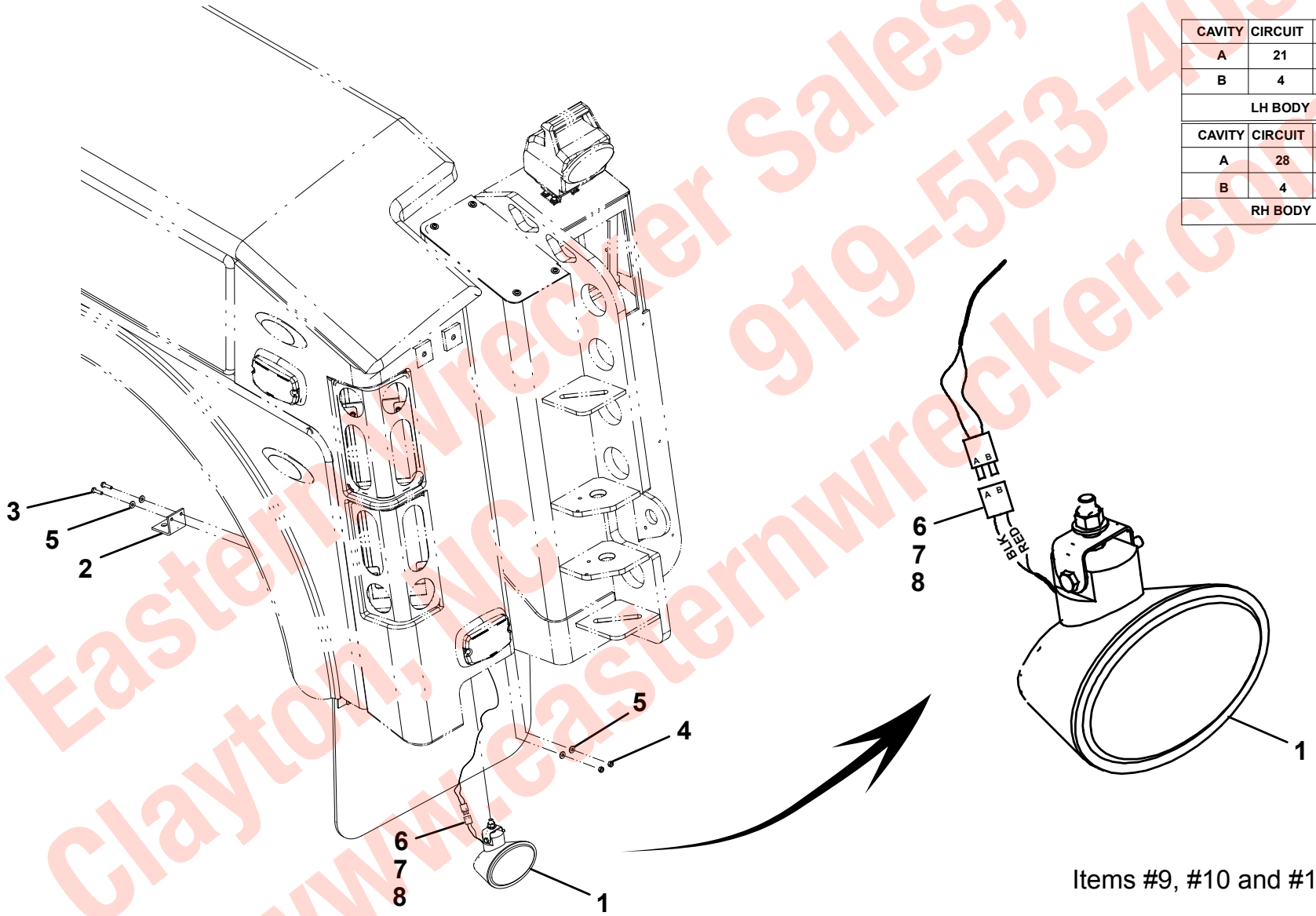


| CAVITY | CIRCUIT | FUNCTION |
|---|---|---|
| A | 21 | GROUND |
| B | 4 | FLOOD 2 |
| LH BODY | | |

| CAVITY | CIRCUIT | FUNCTION |
|---|---|---|
| A | 28 | GROUND |
| B | 4 | FLOOD 2 |
| RH BODY | | |

Items #9, #10 and #11, Not Shown

Eastern Wrecker Sales, Inc.
Clayton, NC 919-553-4038
www.easternwrecker.com

## UPPER WORK LIGHTS INSTALLATION

| ITEM | PART NO. | DESCRIPTION | QTY |
|---|---|---|---|
| 1 | 1001131160 | Lamp | 2 |
| 2 | 7493000021 | Grommet | 2 |
| 3 | 7346000094 | Electrical Connector | 2 |
| 4 | 7346000035 | Electrical Terminal | 4 |
| 5 | 7346000037 | Electrical Seal | 4 |
| 6 | 8597650002 | Wire Loom | 1ft |
| 7 | 7894000010 | Tie Strap | 6 |

Eastern Wrecker Sales, Inc.
919-553-4038
Clayton, NC
www.easternwrecker.com

## UPPER WORK LIGHTS INSTALLATION

| CAVITY | CIRCUIT | FUNCTION |
|---|---|---|
| A | 30 | GROUND |
| B | 3 | FLOOD 1 |

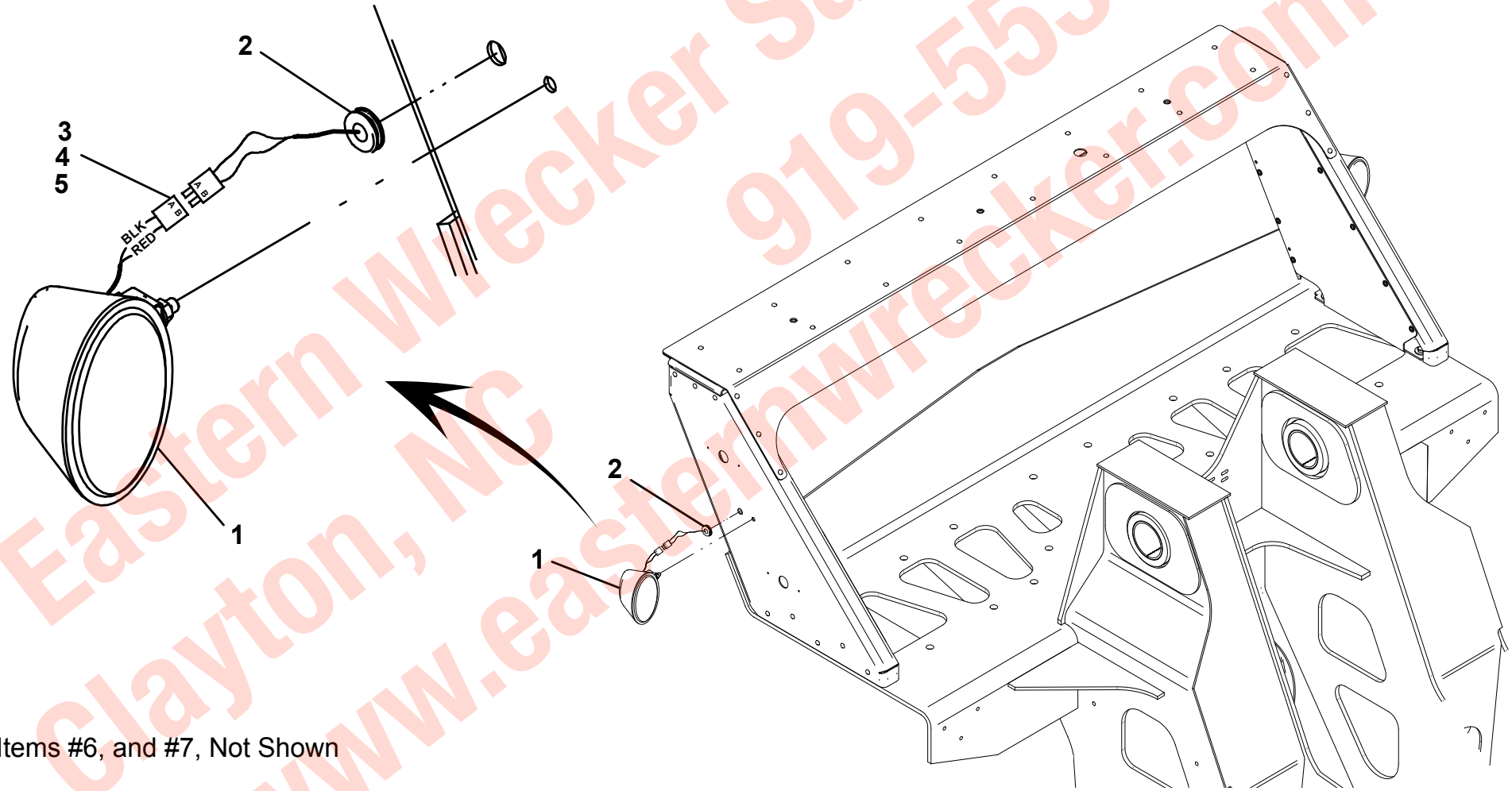


Items #6, and #7, Not Shown

Eastern Wrecker Sales, Inc.
919-553-4038
Clayton, NC
www.easternwrecker.com

## WRECKER BOOM LIGHTS INSTALLATION

| ITEM | PART NO. | DESCRIPTION | QTY |
|---|---|---|---|
| 1 | 1001130429 | Lamp | 1 |
| 2 | 4695000026 | Pipe | 1 |
| 3 | 7247000095 | Assembly, Clamp | 4 |
| 4 | 7114160618 | Capscrew, 0.38”-16NC x 0.75” | 4 |
| 5 | 7950160003 | Lockwasher, 0.38” ID | 4 |
| 6 | 7950160163 | Flatwasher, 0.38” ID | 4 |
| 7 | 4461018 | Electrical Terminal | 1 |
| 8 | 4460509 | Electrical Socket | 2 |
| 9 | 7345001914 | Electrical Terminal | 2 |
| 10 | 7346000039 | Tubing, Heat Shrink | 8in |
| 11 | 8977030200 | Wire, #12Ga. - Red | 1ft |
| 12 | 8977030300 | Wire, #12Ga. - White | 1ft |
| 13 | 7740000001 | Relay, 12V - 40 Amp | 1 |
| 14 | 7457000006 | Fuse, 15 Amp | 1 |

Eastern Wrecker Sales, Inc.
919-553-4038
Clayton, NC
www.easternwrecker.com

# WRECKER BOOM LIGHTS INSTALLATION

| CAVITY | CIRCUIT | COLOR | GA | FUNCTION |
|---|---|---|---|---|
| 1 | 13 | BROWN/BLACK | 12 | GROUND |
| 2 | 12 | YELLOW/BLACK | 12 | AUX 1 |

| CAVITY | COLOR | GA | FUNCTION |
|---|---|---|---|
| 1 | WHITE | 12 | GROUND |
| 2 | RED | 12 | AUX 1 |

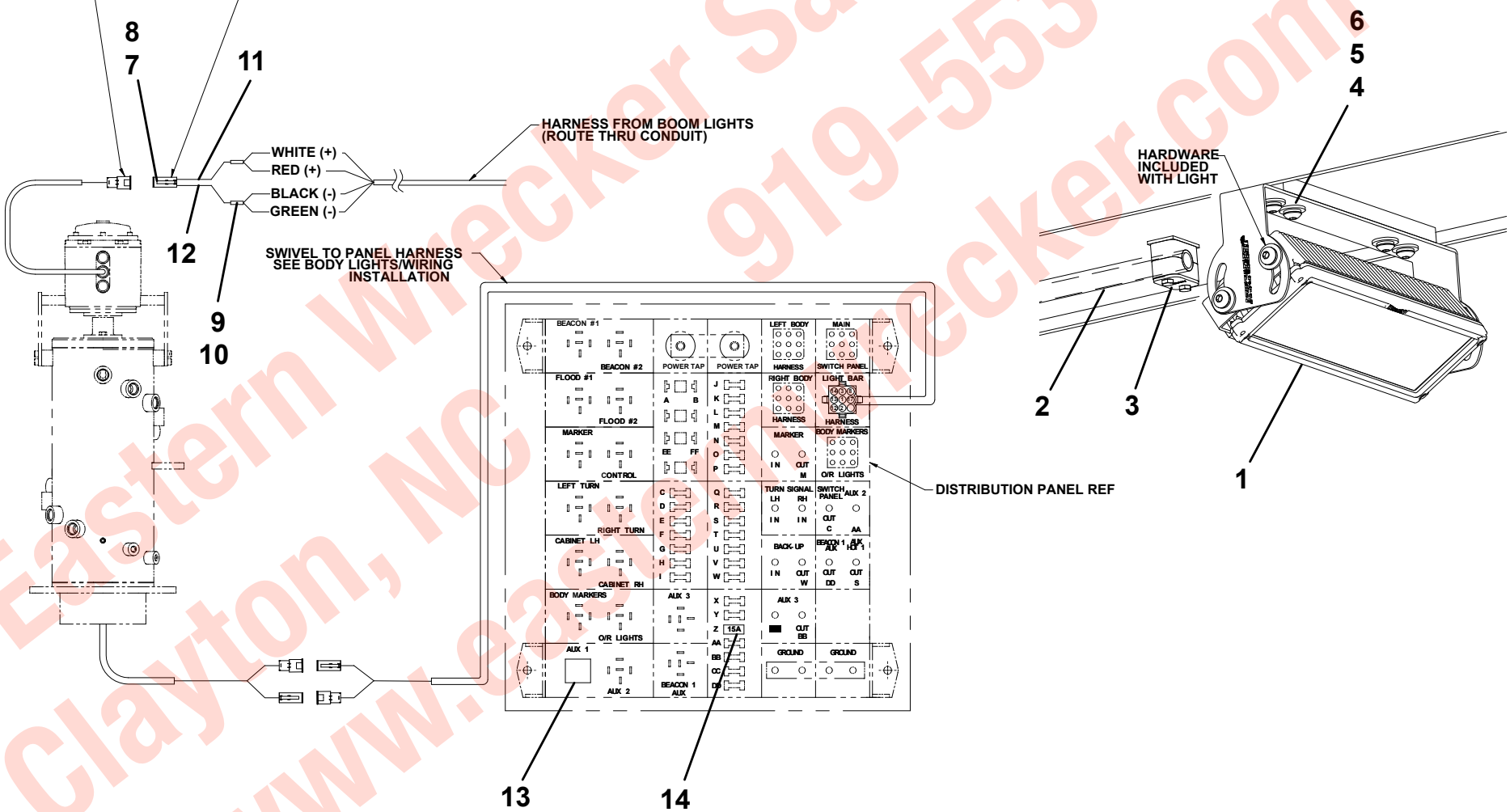


Eastern Wrecker Sales, Inc.
Clayton, NC 919-553-4038
www.easternwrecker.com

## OUTRIGGER LIGHT INSTALLATION

| ITEM | PART NO. | DESCRIPTION | QTY |
|---|---|---|---|
| 1 | 7590000350 | Light | 4 |
| 2 | 1001130528 | Bracket | 4 |
| 3 | 1001136405 | Harness | 1 |
| 4 | 7552000339 | Harness | 1 |
| 5 | 7790141251 | Screw, 0.25” x 0.75” | 8 |
| 6 | 7949000022 | Washer, 0.25” ID | 8 |
| 7 | 7894000042 | Tie Strap | 32 |
| 8 | 1001136406 | Harness | 1 |

Eastern Wrecker Sales, Inc.
919-553-4038
Clayton, NC
www.easternwrecker.com

# OUTRIGGER LIGHT INSTALLATION

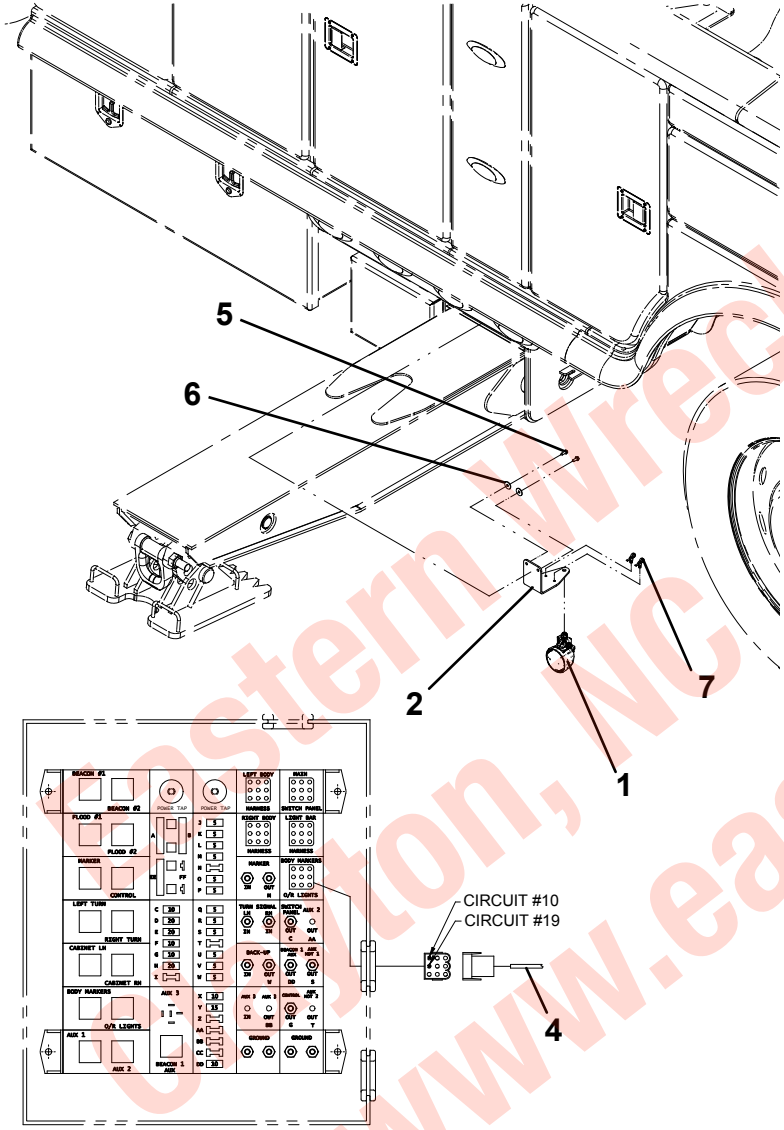


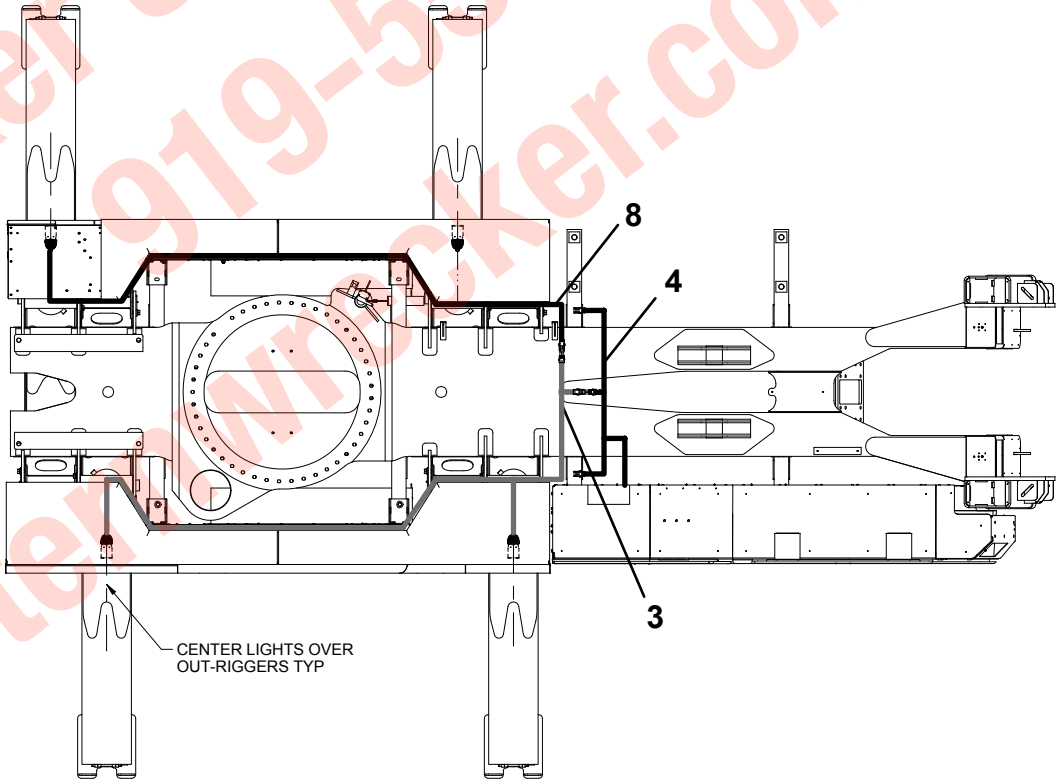


Eastern Wrecker Sales, Inc.
919-553-4038
Clayton, NC
www.easternwrecker.com

## UNDERLIFT LIGHT INSTALLATION

| ITEM | PART NO. | DESCRIPTION | QTY |
|---|---|---|---|
| 1 | 7590000350 | Light | 1 |
| 2 | 1001130467 | Harness | 1 |
| 3 | 7894000010 | Tie Strap | 12 |
| 4 | 8597650002 | Wire Loom | 6in |

Eastern Wrecker Sales, Inc.
919-553-4038
Clayton, NC
www.easternwrecker.com

## UNDERLIFT LIGHT INSTALLATION

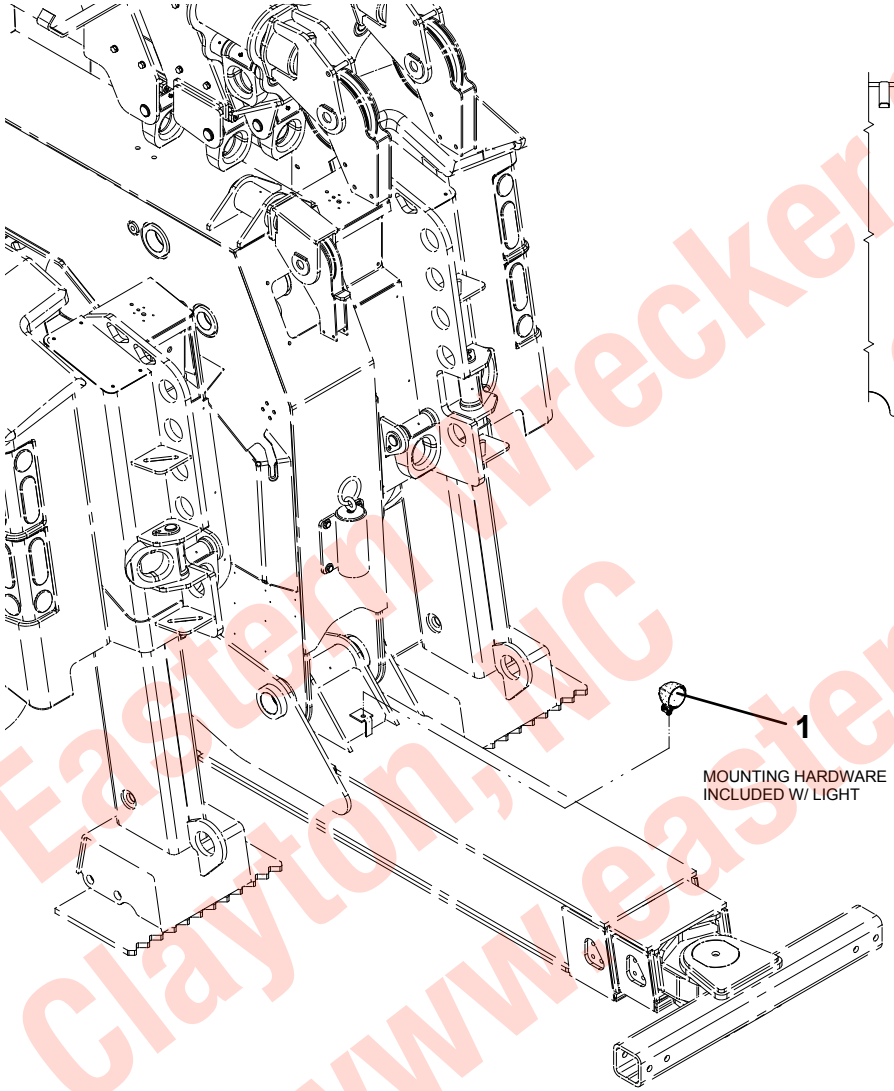


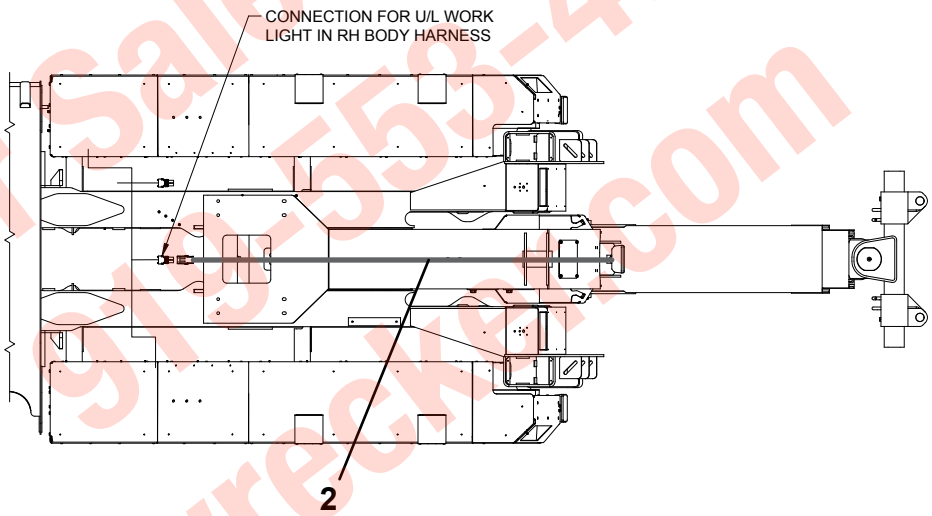


| CAVITY | RH BODY CIRCUIT | FUNCTION |
|---|---|---|
| A | 28 | GROUND |
| B | 4 | FLOOD 2 |

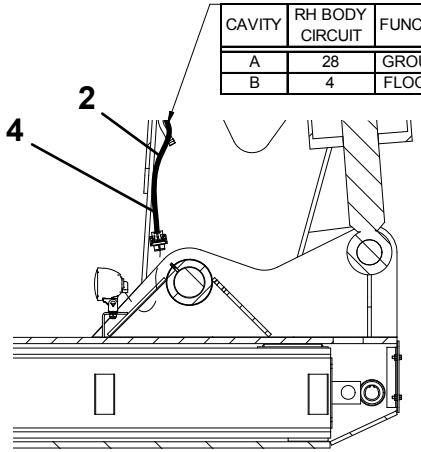


*ITEM #3 NOT SHOWN*

Eastern Wrecker Sales, Inc.
Clayton, NC
919-553-4038
www.easternwrecker.com

## DECAL INSTALLATION

| ITEM | PART NO. | DESCRIPTION | QTY |
|---|---|---|---|
| 1 | 7330000143 | Decal, Proudly Made In The USA | 1 |
| 2 | 1001136175 | Decal, Lube Chart | 1 |
| 3 | 1001137185 | Decal, Outrigger/Spade Warning | 4 |
| 4 | 1001136119 | Decal, Hydraulic Fluid Level | 1 |
| 5 | 1001127220 | Decal, Ident Tag | 1 |
| 6 | 7759000004 | Pop Rivet | 14 |
| 7 | 1001136075 | Decal, Hazardous Voltage | 1 |
| 8 | 7330000688 | Decal, Fuse Panel | 1 |
| 9 | 7330000108 | Decal, Jerr-Dan Brushed Alum | 2 |
| 10 | 7330000208 | Decal, Service Air | 1 |
| 11 | 7330000209 | Decal, Supply Air | 1 |
| 12 | 7330000210 | Decal, Aux Air | 1 |
| 13 | 1001136094 | Decal, Crushing Hazard | 2 |
| 14 | 1001136091 | Decal, Towed Load Hazard | 2 |
| 15 | 1001137167 | Decal, No Climbing | 2 |
| 16 | 1001132242 | Decal, Serial Placard HDR | 1 |
| 17 | 1001132346 | Patent Placard | 1 |
| 18 | 1001137169 | Decal, Pinch/Crush Hazard | 2 |
| 19 | 1001136080 | Decal, Recovery Stability | 2 |
| 20 | 1001142452 | Decal, No Step | 2 |
| 21 | 1001138612 | Decal, Battery Warning | 1 |
| 22 | 1001136103 | Decal, Power Line Warning | 4 |
| 23 | 1001138538 | Decal, Load Chart 50T Rotator | 2 |
| 24 | 1001138537 | Decal, Hook Notice | 2 |
| 25 | 7330000689 | Decal, Certification, NTEA | 1 |
| 26 | 1001141227 | Decal, Backing Hazard | 1 |
| 27 | 1001142828 | Decal, Fall Hazard | 1 |
| 28 | 1001142894 | Decal, Logo Red | 2 |
| | 1001136696 | Decal, Logo White | 2 |

Eastern Wrecker Sales, Inc.
Clayton, NC
919-553-4038
www.easternwrecker.com

## DECAL INSTALLATION

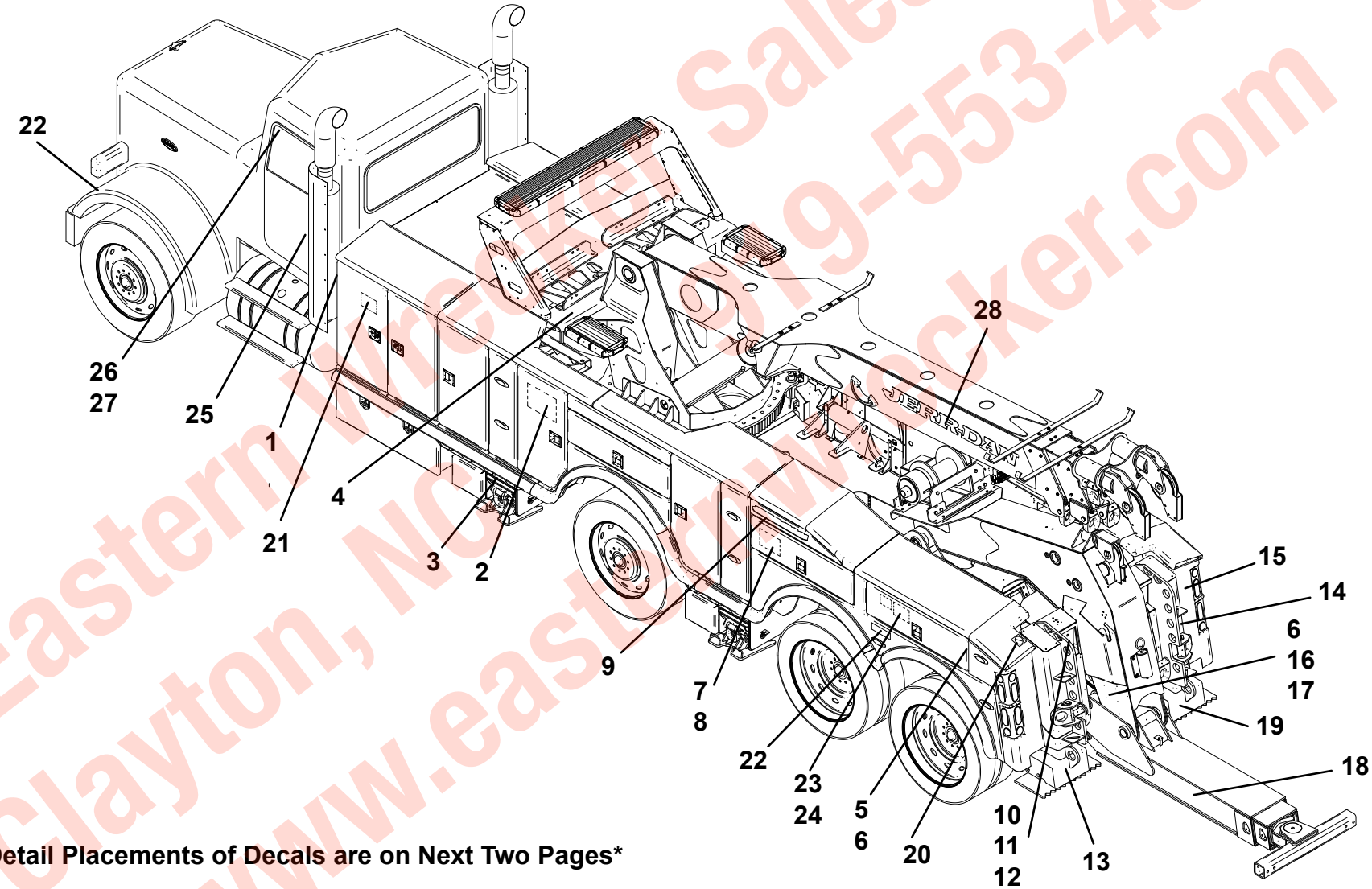


*Detail Placements of Decals are on Next Two Pages*

Eastern Wrecker Sales, Inc.
Clayton, NC 919-553-4038
www.easternwrecker.com

# DECAL INSTALLATION

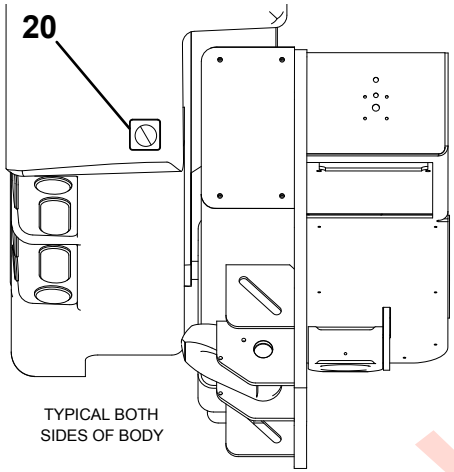


TYPICAL BOTH SIDES OF BODY

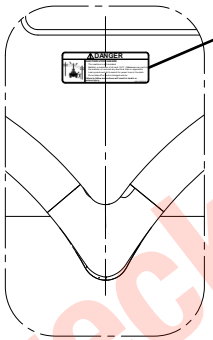


TYPICAL BOTH SIDES OF BODY

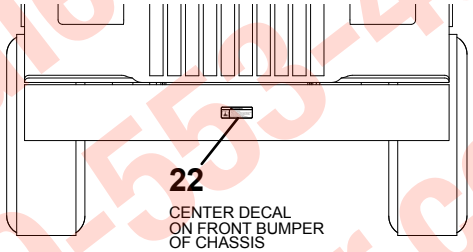


CENTER DECAL ON FRONT BUMPER OF CHASSIS

FRONT VIEW OF CHASSIS

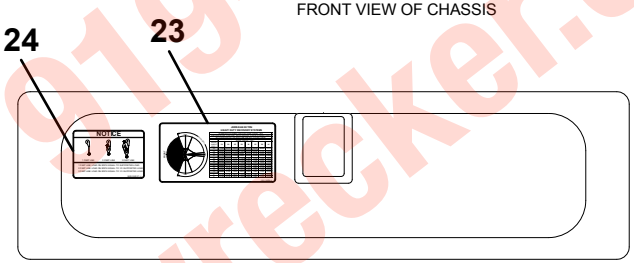


LOCATE ON INSIDE OF CONTROL STATION DOOR. TYPICAL BOTH BODY SIDES

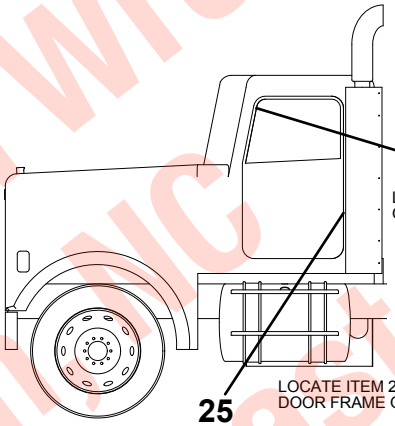


LOCATE ITEM ON DRIVERS SUN VISOR

LOCATE ITEM 26 ON DOOR FRAME OF CHASSIS

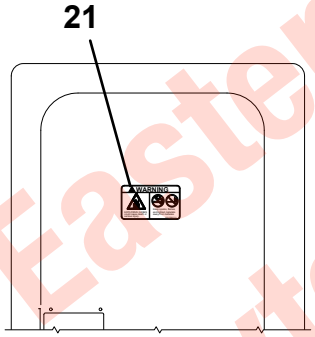


LOCATE ON INSIDE OF TOOLBOX DOOR ADJACENT TO BATTERIES

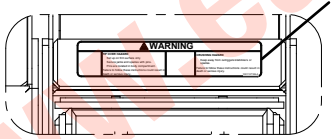


ALL FOUR OUTRIGGERS

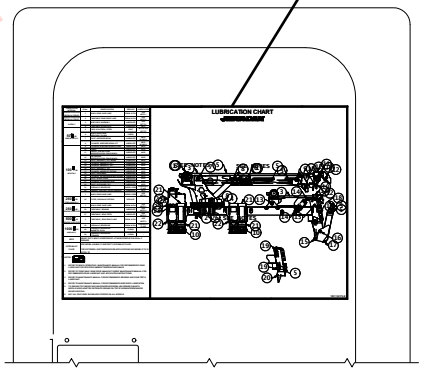


INSIDE OF DOOR

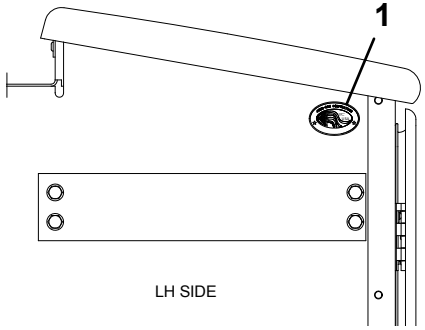


LH SIDE

Eastern Wrecker Sales, Inc.
Clayton, NC 919-553-4038
www.easternwrecker.com

## DECAL INSTALLATION

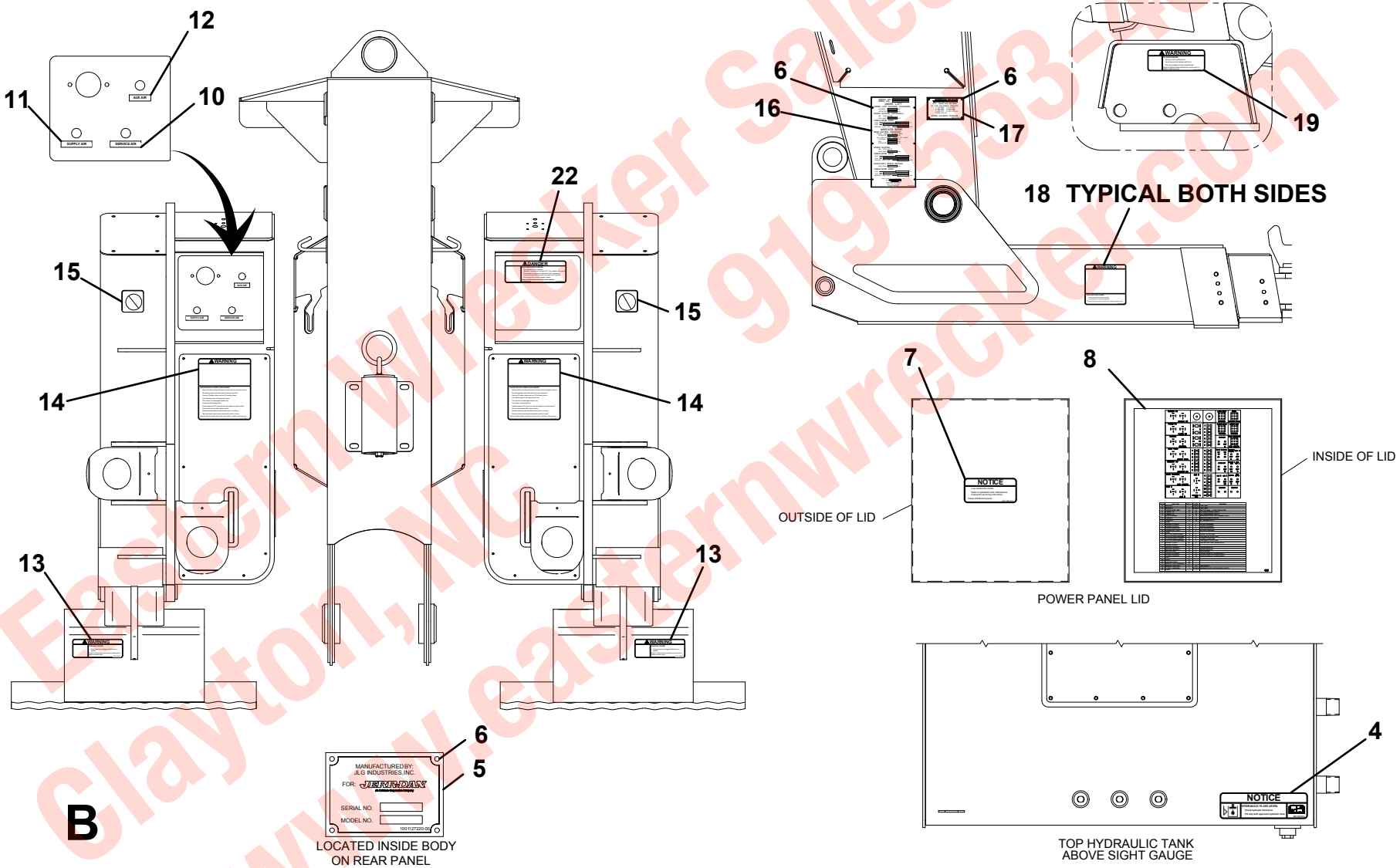


Eastern Wrecker Sales, Inc.
Clayton, NC 919-553-4038
www.easternwrecker.com

# HYDRAULIC SCHEMATIC

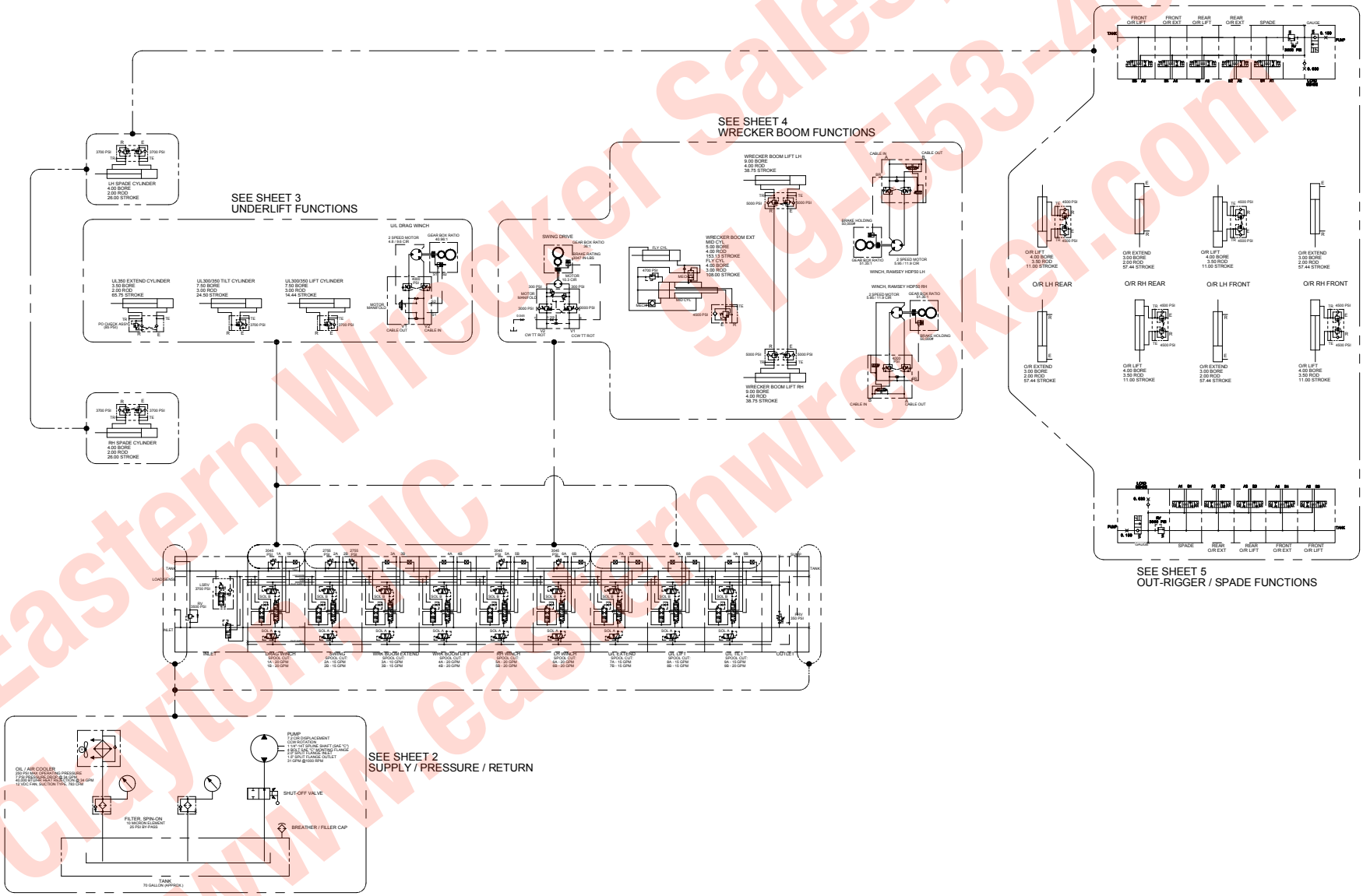


Eastern Wrecker Sales, Inc.
Clayton, NC 919-553-4038
www.easternwrecker.com

# HYDRAULIC SCHEMATIC

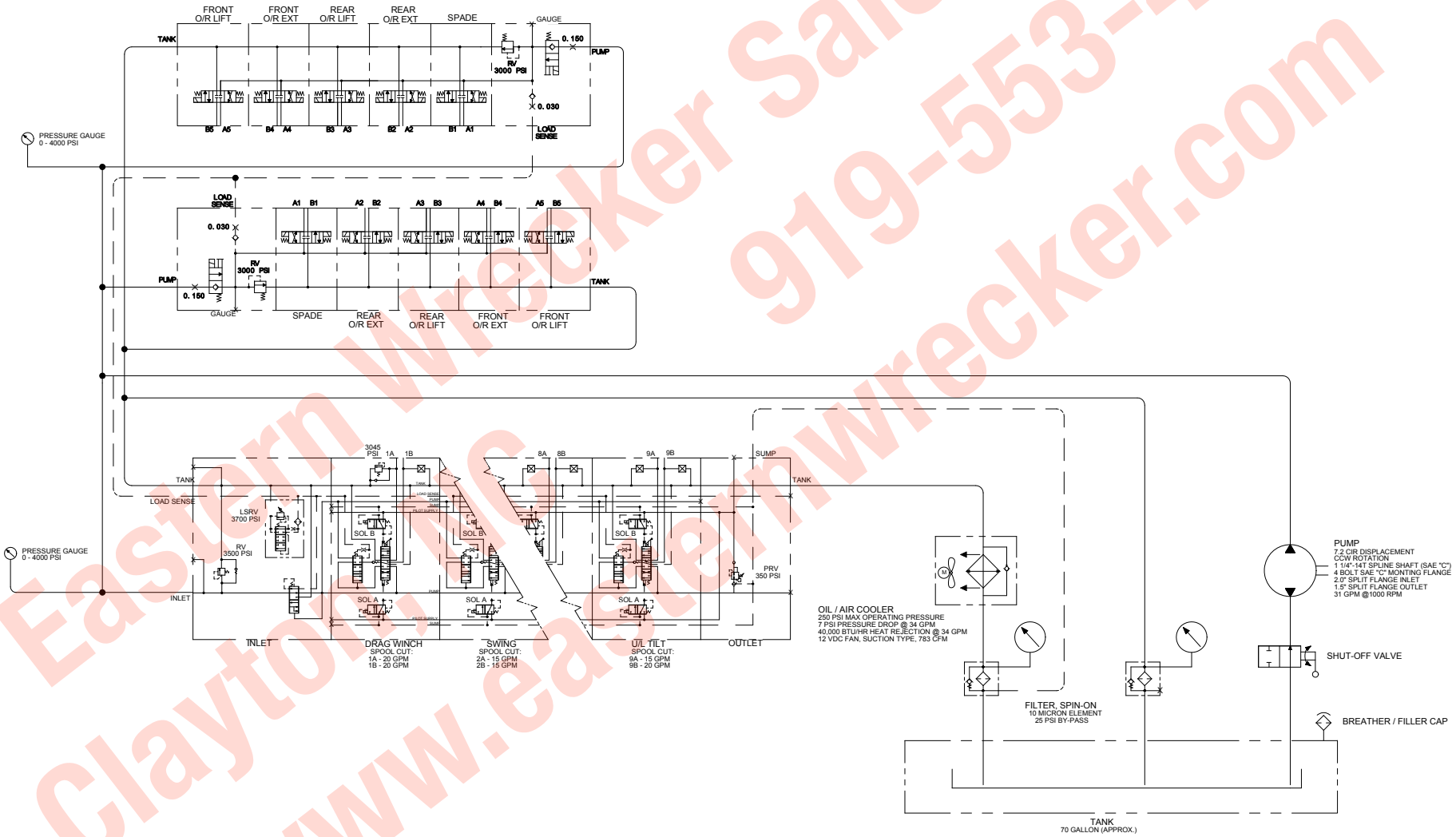


Eastern Wrecker Sales, Inc.
Clayton, NC
919-553-4038
www.easternwrecker.com

# HYDRAULIC SCHEMATIC

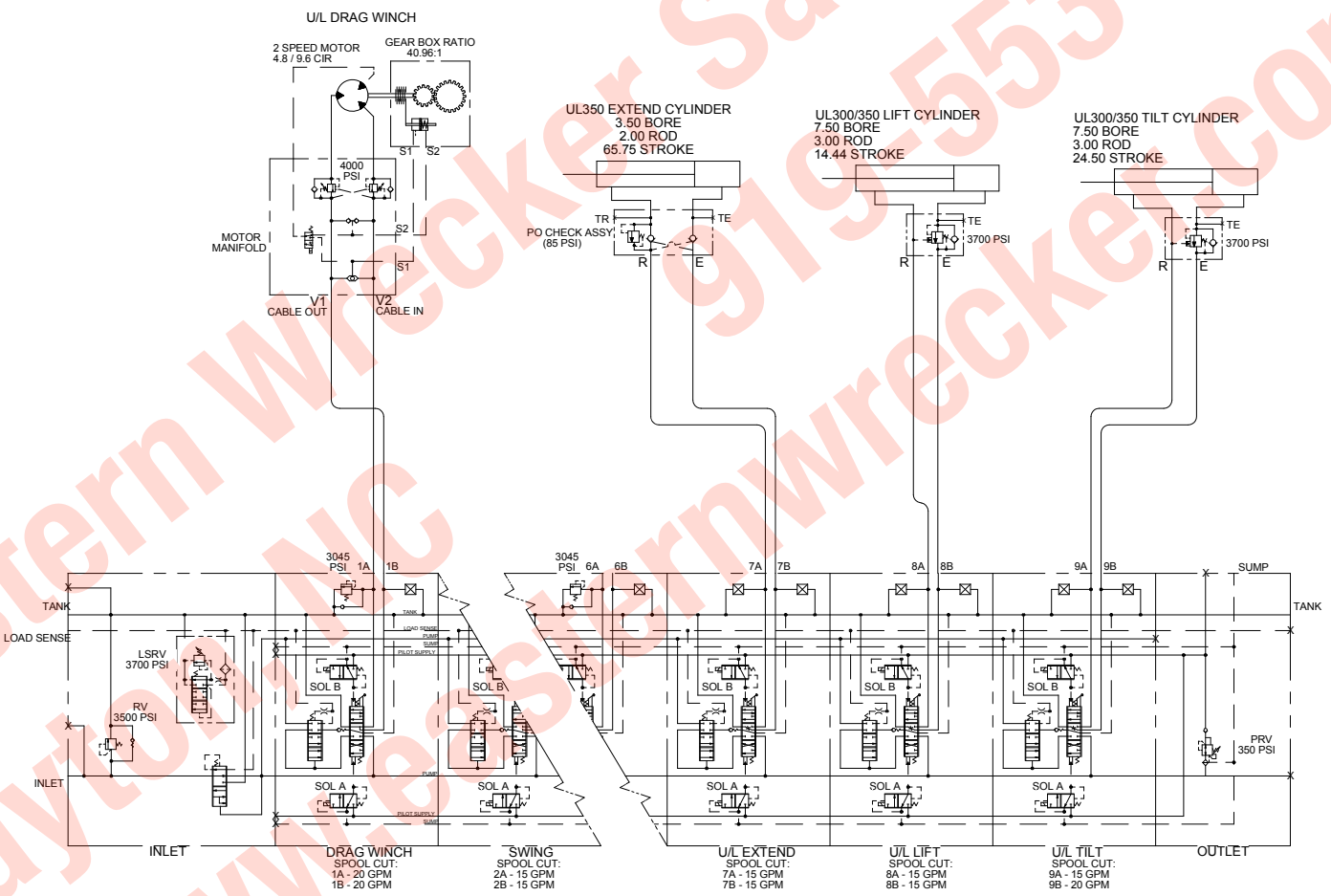


Eastern Wrecker Sales, Inc.
Clayton, NC 919-553-4038
www.easternwrecker.com

# HYDRAULIC SCHEMATIC

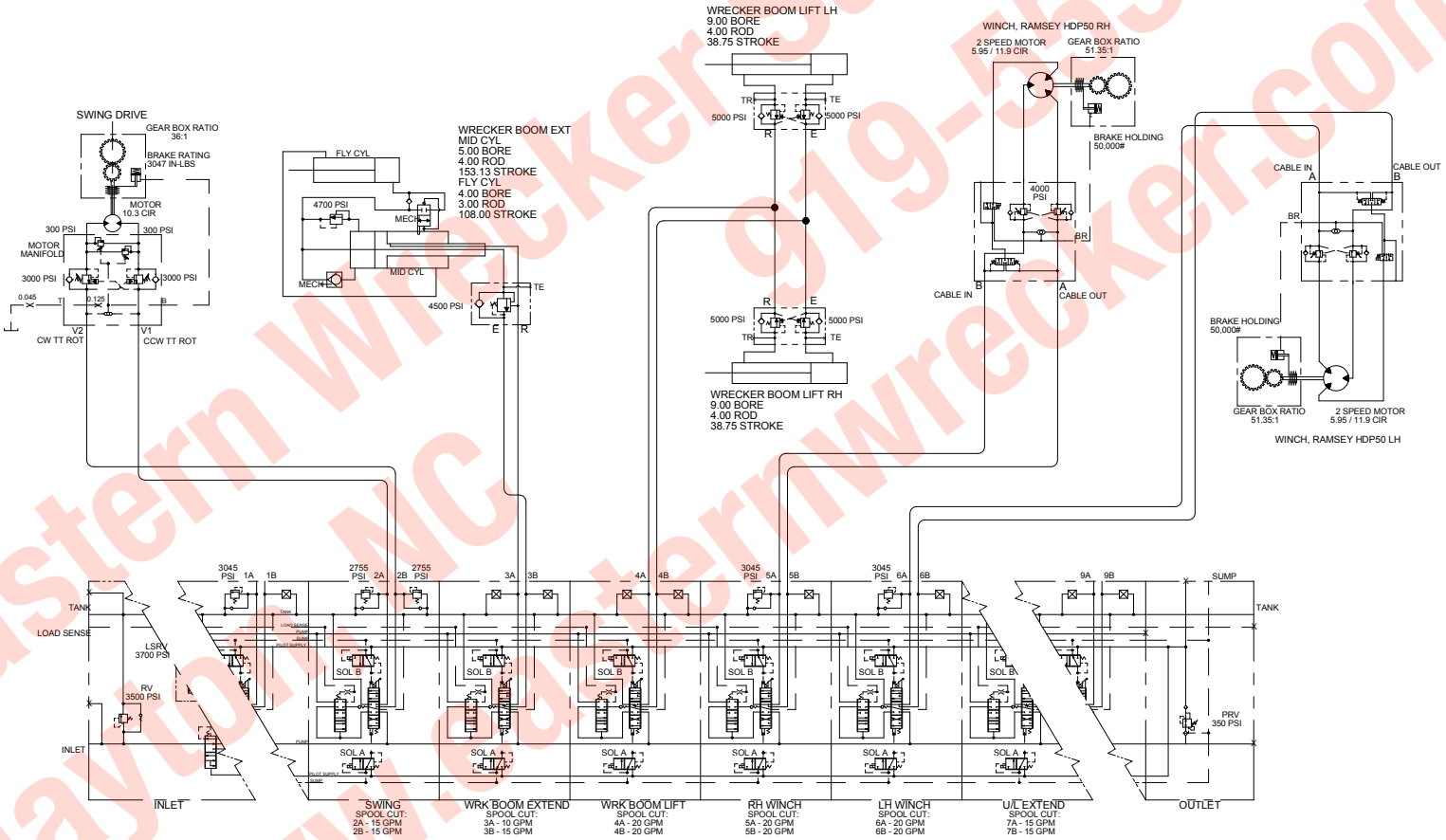


Eastern Wrecker Sales, Inc.
Clayton, NC 919-553-4038
www.easternwrecker.com

# HYDRAULIC SCHEMATIC

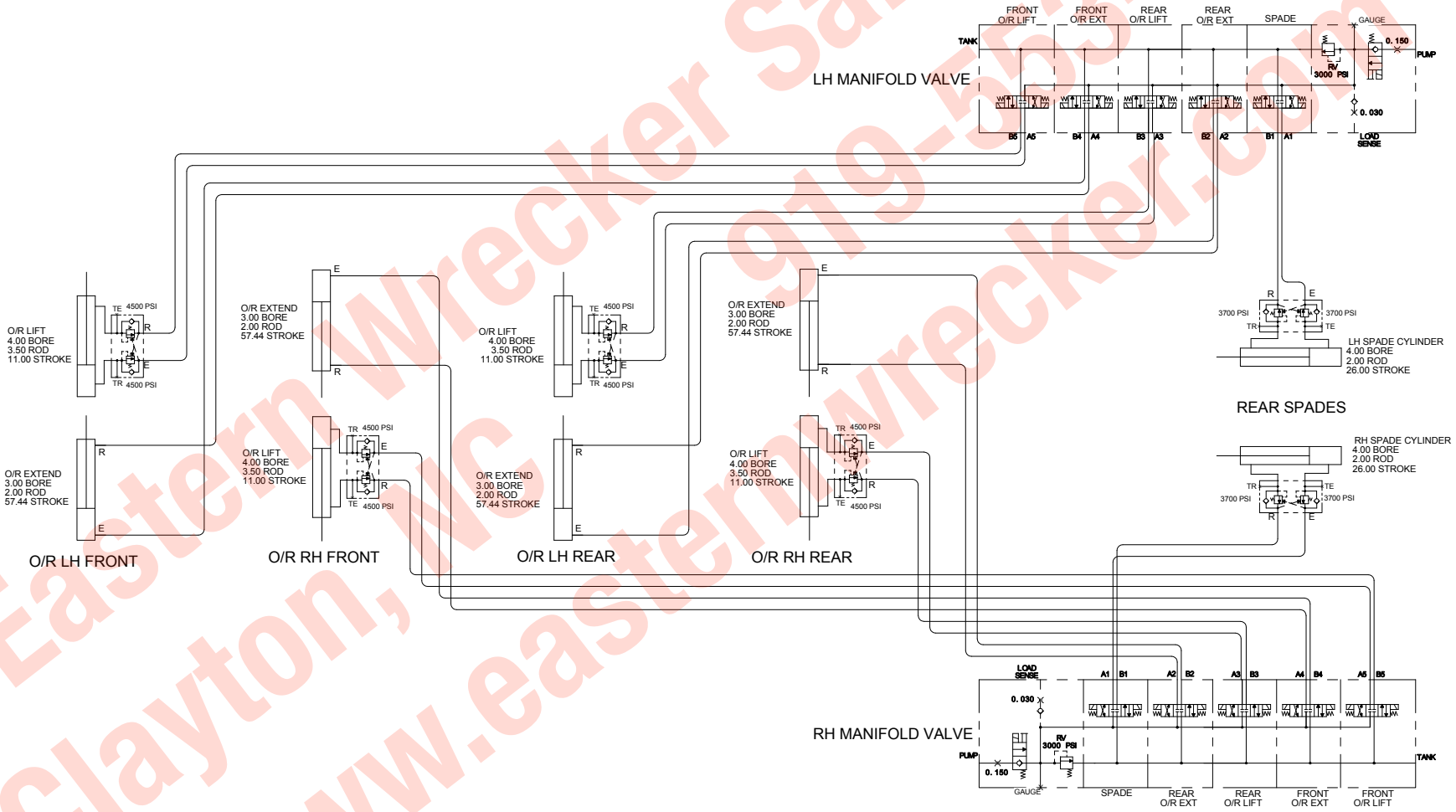


Eastern Wrecker Sales, Inc.
919-553-4038
Clayton, NC
www.easternwrecker.com

# AIR SCHEMATIC

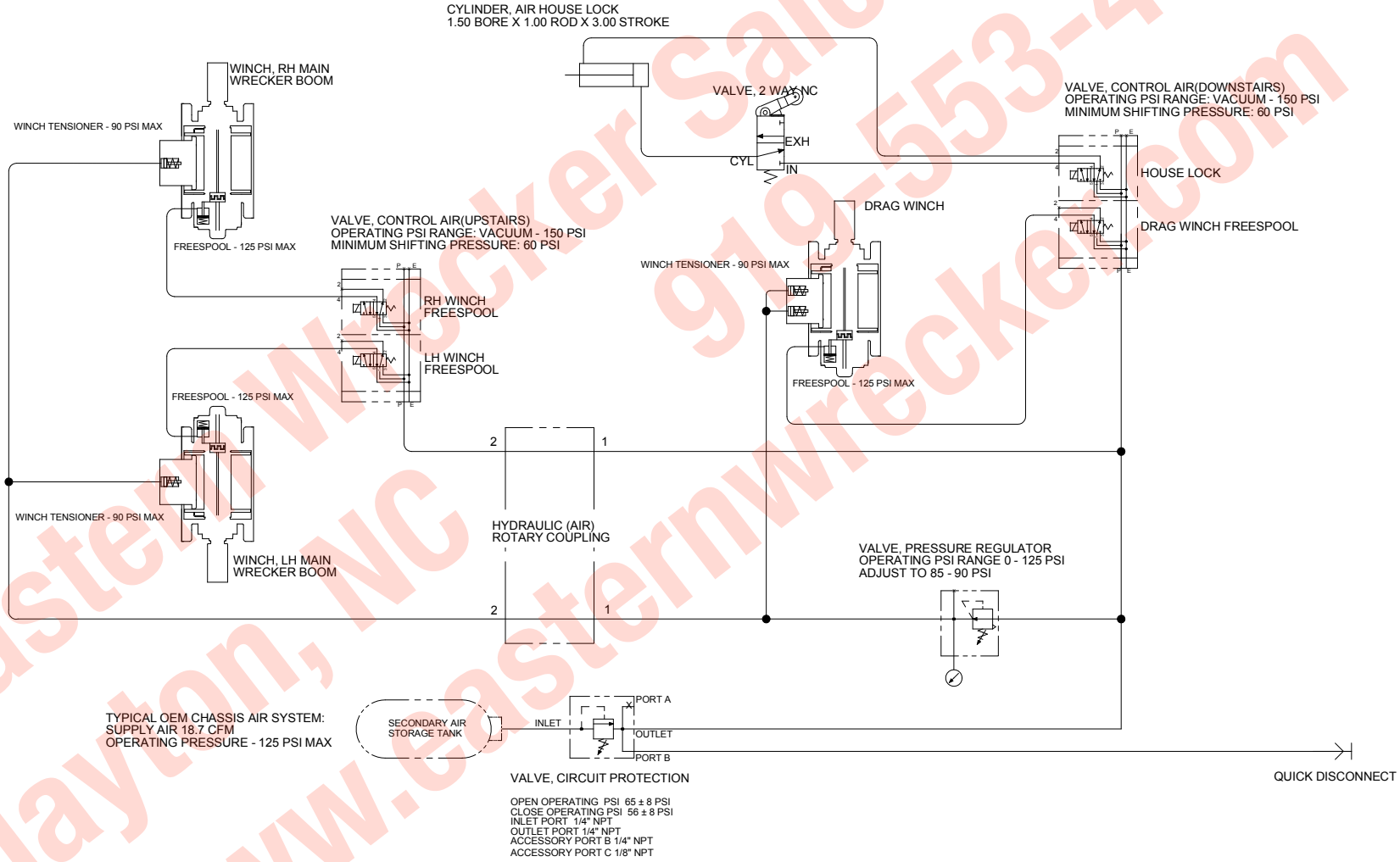


Eastern Wrecker Sales, Inc.
Clayton, NC 919-553-4038
www.easternwrecker.com

# PART NUMBER INDEX


| Part Number | Page |
|---|---|
| 0682212 | 20, 80, 84 |
| 0682248 | 80, 84 |
| 0682622 | 42 |
| 0682652 | 34 |
| 1704260 | 210 |
| 2220773 | 196 |
| 2220775 | 196 |
| 2220973 | 197 |
| 2221051 | 196 |
| 4460509 | 252 |
| 4461018 | 252 |
| 7003116 | 106, 110 |
| 7003212 | 30, 94, 98 |
| 7003281 | 94, 98 |
| 7005314 | 82, 86, 90, 102 |
| 7005322 | 30 |
| 7005348 | 82, 86, 90, 94, 98, 102, 106, 110 |
| 7005365 | 30, 56, 82, 86, 90, 94, 102, 106, 110 |
| 7019828 | 30, 94, 98 |
| 7019829 | 106, 110 |
| 7019844 | 94, 98 |
| 7019845 | 94, 98 |
| 7019846 | 94, 98 |
| 7019892 | 82, 90 |
| 7023518 | 106, 110 |
| 7023593 | 56 |
| 7024101 | 106, 110 |
| 7024444 | 16 |
| 7024445 | 16 |
| 7029760 | 22, 26, 52 |
| 8034697 | 206 |
| 10701259 | 34, 42 |
| 10837929 | 206 |
| 10837937 | 206 |
| 70021648 | 30, 56, 82, 86, 90, 94, 98, 102, 106, 110 |
| 70021757 | 86, 102 |
| 70021774 | 56 |
| 70022067 | 22, 52 |
| 70022603 | 22 |
| 70050147 | 74, 120 |
| 70050163 | 244 |
| 70050169 | 244 |
| 70050170 | 244 |
| 70050171 | 244 |
| 70050172 | 244 |
| 70050174 | 244 |
| 70050175 | 244 |
| 70050176 | 244 |
| 70050177 | 244 |
| 70050178 | 244 |
| 70050179 | 244 |
| 70050180 | 244 |
| 70050181 | 244 |
| 70050182 | 244 |
| 70050183 | 244 |
| 70050185 | 244 |
| 70050186 | 244 |
| 70050187 | 244 |
| 70050188 | 244 |
| 70050189 | 244 |
| 70050190 | 244 |
| 70050191 | 244 |
| 70050192 | 244 |
| 70050194 | 244 |
| 70050195 | 244 |
| 70050196 | 244 |
| 70050197 | 244 |
| 70050199 | 244 |
| 70050200 | 244 |
| 70050201 | 244 |
| 70050202 | 244 |
| 70050203 | 244 |
| 70050204 | 244 |
| 70050205 | 244 |
| 70050206 | 244 |
| 70050207 | 244 |
| 70050208 | 244 |
| 70050209 | 244 |
| 70050210 | 244 |
| 70050211 | 244 |
| 70050215 | 30, 86, 102 |
| 70050216 | 82, 90 |
| 70050217 | 94 |
| 70050218 | 94 |
| 70050232 | 86 |
| 70050273 | 18 |
| 70050274 | 18 |
| 70050275 | 18 |
| 70050276 | 18 |
| 70050277 | 18 |
| 70050278 | 18 |
| 70050279 | 18 |
| 70050280 | 18 |
| 70050281 | 18 |
| 70050282 | 18 |
| 70050308 | 222 |
| 70050309 | 222 |
| 70050310 | 222 |
| 70050312 | 222 |
| 70050315 | 222 |
| 70050316 | 222 |
| 70050318 | 222 |
| 70050319 | 222 |
| 70050320 | 222 |
| 70050321 | 222 |
| 70050332 | 60 |
| 70050333 | 60 |
| 70050334 | 60 |
| 70050335 | 60 |
| 70050336 | 60 |
| 70050337 | 60 |
| 70050338 | 60 |
| 70050339 | 60 |
| 70050340 | 60 |
| 70050341 | 60 |
| 70050342 | 60 |
| 70050343 | 60 |
| 70050344 | 60 |
| 70050345 | 60 |
| 70050346 | 60 |
| 70050347 | 60 |
| 70050348 | 60 |
| 70050349 | 60 |
| 70050350 | 60 |
| 70050351 | 60 |
| 70050352 | 60 |
| 70050353 | 60 |
| 70050354 | 60 |
| 70050355 | 60 |
| 70050356 | 60 |
| 70050357 | 60 |
| 70050358 | 60 |
| 70050359 | 60 |
| 70050360 | 60, 62 |
| 70050361 | 62 |
| 70050362 | 62 |
| 70050363 | 62 |
| 70050364 | 62 |
| 70050365 | 98 |
| 70050366 | 62 |
| 70050367 | 66 |
| 70050368 | 66, 124 |
| 70050369 | 66, 124 |
| 70050370 | 66, 124 |


Eastern Wrecker Sales, Inc.
Clayton, NC 919-553-2038
www.easternwrecker.com

# PART NUMBER INDEX


| Part Number | Page |
|---|---|
| 70050371 | 66, 124 |
| 70050372 | 66, 124 |
| 70050373 | 66 |
| 70050374 | 72 |
| 70050375 | 76 |
| 70050376 | 76 |
| 70050377 | 76 |
| 70050378 | 76 |
| 70050379 | 76 |
| 70050380 | 70 |
| 70050381 | 68 |
| 70050382 | 68 |
| 70050383 | 68 |
| 70050384 | 74, 120 |
| 70050385 | 78 |
| 70050386 | 16 |
| 70050387 | 16 |
| 70050388 | 16 |
| 70050389 | 16 |
| 70050390 | 16 |
| 70050391 | 16 |
| 70050392 | 244 |
| 70050393 | 244 |
| 70050394 | 244 |
| 70050395 | 244 |
| 70050396 | 60 |
| 70050399 | 124 |
| 70050400 | 124 |
| 70050401 | 124 |
| 70050402 | 124 |
| 70050403 | 52 |
| 70050404 | 52 |
| 70050407 | 52 |
| 70050408 | 52 |
| 70050409 | 52 |
| 70050410 | 52 |
| 70050411 | 52 |
| 70050413 | 52 |
| 70050414 | 26 |
| 70050415 | 52 |
| 70050416 | 52 |
| 70050419 | 52 |
| 70050420 | 52 |
| 70050421 | 52 |
| 70050422 | 52 |
| 70050423 | 52 |
| 70050424 | 22 |
| 70050425 | 22 |
| 70050426 | 22 |
| 70050427 | 22 |
| 70050428 | 22 |
| 70050430 | 22 |
| 70050431 | 22 |
| 70050432 | 22 |
| 70050433 | 22 |
| 70050434 | 22 |
| 70050435 | 22 |
| 70050436 | 22 |
| 70050437 | 26 |
| 70050438 | 22, 26 |
| 70050439 | 22, 26 |
| 70050440 | 22 |
| 70050441 | 26 |
| 70050442 | 26 |
| 70050444 | 26 |
| 70050445 | 26 |
| 70050446 | 26 |
| 70050447 | 26 |
| 70050448 | 26 |
| 70050449 | 26 |
| 70050450 | 26 |
| 70050451 | 26 |
| 70050452 | 26 |
| 70050471 | 206 |
| 70050472 | 206 |
| 70050473 | 206 |
| 70050474 | 206 |
| 70050475 | 206 |
| 70050476 | 206 |
| 70050477 | 206 |
| 70050478 | 206 |
| 70050479 | 206 |
| 70050480 | 206 |
| 70050481 | 206 |
| 70050482 | 206 |
| 70050483 | 206 |
| 70050484 | 206 |
| 70050485 | 206 |
| 70050486 | 206 |
| 70050487 | 206 |
| 70050488 | 206 |
| 70050489 | 206 |
| 70050490 | 206 |
| 70050491 | 206 |
| 70050492 | 206 |
| 70050493 | 206 |
| 70050494 | 206 |
| 70050495 | 206 |
| 70050496 | 206 |
| 70050497 | 206 |
| 70050498 | 206 |
| 70050499 | 206 |
| 70050500 | 206 |
| 70050501 | 206 |
| 70050502 | 206 |
| 70050503 | 206 |
| 70050504 | 206 |
| 70050505 | 206 |
| 70050506 | 206 |
| 70050507 | 206 |
| 70050508 | 206 |
| 70050510 | 206 |
| 70050511 | 206 |
| 70050512 | 206 |
| 70050513 | 206 |
| 70050526 | 230 |
| 70050527 | 230 |
| 70050528 | 230 |
| 70050529 | 230 |
| 70050530 | 230 |
| 70050531 | 30 |
| 70050534 | 106, 110 |
| 70050535 | 106, 110 |
| 70050536 | 106 |
| 70050537 | 106 |
| 70050538 | 106 |
| 70050540 | 106, 110 |
| 70050541 | 106, 110 |
| 70050542 | 90 |
| 70050543 | 90 |
| 70050544 | 86, 102 |
| 70050545 | 86, 102 |
| 70050546 | 86 |
| 70050547 | 86 |
| 70050548 | 86, 102 |
| 70050549 | 86, 102 |
| 70050550 | 110 |
| 70050551 | 110 |
| 70050552 | 110 |
| 70050553 | 94 |
| 70050554 | 94 |
| 70050555 | 94 |
| 70050556 | 56 |
| 70050557 | 56 |
| 70050558 | 56 |
| 70050559 | 56 |
| 70050560 | 56 |
| 70050561 | 56 |


Eastern Wrecker Sales, Inc.
Clayton, NC 919-553-2038
www.easternwrecker.com

| Part Number | Page |
|---|---|
| 70050562 | 56 |
| 70050563 | 56 |
| 70050564 | 56 |
| 70050565 | 56 |
| 70050566 | 56 |
| 70050567 | 222 |
| 70050568 | 56, 106 |
| 70050569 | 56 |
| 70050570 | 56 |
| 70050571 | 222 |
| 70050572 | 56 |
| 70050573 | 222 |
| 70050574 | 56 |
| 70050575 | 56 |
| 70050576 | 56 |
| 70050577 | 56 |
| 70050578 | 56 |
| 70050579 | 56 |
| 70050580 | 56 |
| 70050581 | 56 |
| 70050582 | 56 |
| 70050583 | 56 |
| 70050584 | 56 |
| 70050585 | 56 |
| 70050586 | 56 |
| 70050587 | 56 |
| 70050588 | 56 |
| 70050589 | 56 |
| 70050590 | 56 |
| 70050591 | 56 |
| 70050592 | 56 |
| 70050594 | 102 |
| 70050595 | 102 |
| 80004049 | 86, 102 |
| 80004056 | 110 |
| 83304140 | 56, 82, 90 |
| 83304143 | 56, 90 |
| 83304173 | 16 |
| 83304174 | 16 |
| 83304181 | 56 |
| 90022234 | 22 |
| 90022282 | 22 |
| 91024100 | 26 |
| 91034041 | 52 |
| 91034051 | 26 |
| 1001003803 | 24 |
| 1001118961 | 34 |
| 1001127220 | 258 |
| 1001127311 | 20, 22 |
| 1001127312 | 24, 26 |
| 1001127313 | 50, 52 |
| 1001127315 | 14 |
| 1001127316 | 34 |
| 1001127324 | 36 |
| 1001127656 | 40 |
| 1001127671 | 206 |
| 1001127836 | 54 |
| 1001127841 | 54 |
| 1001127853 | 54 |
| 1001127918 | 24 |
| 1001127996 | 14, 16 |
| 1001128160 | 80, 84 |
| 1001128283 | 50 |
| 1001128323 | 58, 60 |
| 1001128391 | 42 |
| 1001128440 | 80 |
| 1001128450 | 80, 84 |
| 1001128463 | 50 |
| 1001128697 | 80 |
| 1001129004 | 54 |
| 1001129005 | 54 |
| 1001129006 | 54 |
| 1001129393 | 54 |
| 1001129405 | 20 |
| 1001129406 | 24 |
| 1001129416 | 20 |
| 1001129470 | 44 |
| 1001129495 | 58, 60 |
| 1001129498 | 24 |
| 1001129534 | 80 |
| 1001129535 | 80 |
| 1001129540 | 58 |
| 1001129541 | 58 |
| 1001129542 | 58 |
| 1001129543 | 58 |
| 1001129628 | 38, 40 |
| 1001129777 | 8 |
| 1001129778 | 8 |
| 1001129786 | 8 |
| 1001129800 | 226, 230 |
| 1001129818 | 238 |
| 1001129820 | 238 |
| 1001129828 | 242 |
| 1001129861 | 242 |
| 1001129987 | 38 |
| 1001130086 | 210 |
| 1001130087 | 210 |
| 1001130262 | 210 |
| 1001130287 | 210 |
| 1001130313 | 210 |
| 1001130340 | 210 |
| 1001130347 | 210 |
| 1001130385 | 210 |
| 1001130395 | 10 |
| 1001130426 | 196 |
| 1001130429 | 252 |
| 1001130437 | 14 |
| 1001130450 | 210 |
| 1001130467 | 256 |
| 1001130484 | 210 |
| 1001130485 | 210 |
| 1001130491 | 210 |
| 1001130528 | 254 |
| 1001130587 | 196 |
| 1001130589 | 196 |
| 1001130597 | 196 |
| 1001130607 | 196 |
| 1001130608 | 196 |
| 1001130609 | 196 |
| 1001130610 | 196 |
| 1001130611 | 196 |
| 1001130696 | 210 |
| 1001130840 | 36 |
| 1001130891 | 224 |
| 1001131032 | 210 |
| 1001131060 | 34 |
| 1001131160 | 248, 250 |
| 1001131171 | 246 |
| 1001131302 | 196 |
| 1001132242 | 258 |
| 1001132346 | 258 |
| 1001133242 | 84 |
| 1001133286 | 84 |
| 1001133289 | 84 |
| 1001133571 | 10 |
| 1001133875 | 150, 158 |
| 1001133876 | 152, 160 |
| 1001134039 | 150 |
| 1001134078 | 150 |
| 1001134095 | 152 |
| 1001134239 | 42 |
| 1001134376 | 210 |
| 1001134411 | 210 |
| 1001134412 | 210 |
| 1001134433 | 210 |
| 1001134450 | 210 |
| 1001134451 | 184 |
| 1001134461 | 210 |


Eastern Wrecker Sales, Inc.
Clayton, NC 919-553-4038
www.easternwrecker.com

| Part Number | Page |
|---|---|
| 1001134462 | 210 |
| 1001134463 | 210 |
| 1001134690 | 216 |
| 1001134691 | 216 |
| 1001134727 | 216 |
| 1001134739 | 10 |
| 1001134740 | 10 |
| 1001135127 | 58, 64 |
| 1001135301 | 226 |
| 1001135645 | 8 |
| 1001135652 | 24 |
| 1001135667 | 24 |
| 1001135896 | 144 |
| 1001135897 | 144 |
| 1001135971 | 150 |
| 1001136075 | 258 |
| 1001136080 | 258 |
| 1001136091 | 258 |
| 1001136094 | 258 |
| 1001136103 | 258 |
| 1001136119 | 258 |
| 1001136146 | 210 |
| 1001136175 | 258 |
| 1001136270 | 216 |
| 1001136405 | 254 |
| 1001136406 | 254 |
| 1001136692 | 34 |
| 1001136696 | 258 |
| 1001136761 | 197 |
| 1001136772 | 197 |
| 1001136792 | 197 |
| 1001136807 | 197 |
| 1001136811 | 196 |
| 1001136811* | 196 |
| 1001136814 | 196 |
| 1001136817 | 196 |
| 1001136821 | 196 |

| Part Number | Page |
|---|---|
| 1001136824 | 196 |
| 1001136833 | 196 |
| 1001136836 | 196 |
| 1001136841 | 196 |
| 1001136843 | 196 |
| 1001136844 | 196 |
| 1001136845 | 196 |
| 1001136846 | 196 |
| 1001136851 | 196 |
| 1001136861 | 196 |
| 1001136876 | 196 |
| 1001136881 | 196 |
| 1001136883 | 196 |
| 1001136884 | 197 |
| 1001136891 | 197 |
| 1001136893 | 197 |
| 1001136896 | 197 |
| 1001136908 | 158, 160 |
| 1001136909 | 158, 160 |
| 1001136910 | 158, 160 |
| 1001136931 | 148, 156 |
| 1001136932 | 146, 154 |
| 1001136939 | 197 |
| 1001136957 | 197 |
| 1001136958 | 197 |
| 1001136960 | 197 |
| 1001137001 | 160 |
| 1001137018 | 142 |
| 1001137019 | 142 |
| 1001137048 | 196 |
| 1001137049 | 196 |
| 1001137052 | 196 |
| 1001137102 | 184 |
| 1001137159 | 210 |
| 1001137160 | 210 |
| 1001137167 | 258 |
| 1001137169 | 258 |

| Part Number | Page |
|---|---|
| 1001137185 | 258 |
| 1001137273 | 148 |
| 1001137373 | 170 |
| 1001138537 | 258 |
| 1001138538 | 258 |
| 1001138612 | 258 |
| 1001141227 | 258 |
| 1001141265 | 194 |
| 1001142452 | 258 |
| 1001142626 | 44 |
| 1001142828 | 258 |
| 1001142829 | 184 |
| 1001142894 | 258 |
| 1001143119 | 144 |
| 1001143276 | 184 |
| 1001143284 | 184 |
| 1001143286 | 184 |
| 1001143287 | 184 |
| 1001143288 | 184 |
| 1001143289 | 184 |
| 1001143542 | 224 |
| 1001143543 | 184 |
| 1001143564 | 224 |
| 1001143565 | 224 |
| 1001143937 | 196 |
| 1001144012 | 14, 184, 216 |
| 1001144017 | 184 |
| 1001144068 | 14 |
| 1001144150 | 184 |
| 1001145521 | 64 |
| 1001145522 | 64 |
| 1001145523 | 64 |
| 1001145524 | 64 |
| 1001145566 | 64 |
| 1001150151 | 238 |
| 1001150180 | 240 |
| 1001150426 | 184 |

| Part Number | Page |
|---|---|
| 1001151049 | 80, 84 |
| 1001151184 | 80, 84 |
| 1001151185 | 80, 84 |
| 1001151763 | 14, 18 |
| 1001154069 | 210 |
| 1001154070 | 210 |
| 1001154075 | 210 |
| 1001154273 | 210 |
| 1001154274 | 210 |
| 1001154275 | 210 |
| 1001154276 | 210 |
| 1001154277 | 210 |
| 1001154786 | 24 |
| 1001156079 | 210 |
| 1001156186 | 210 |
| 1001156279 | 210 |
| 1001166916 | 158 |
| 2502880300 | 134 |
| 3007000004 | 130 |
| 3020000119 | 132, 134 |
| 3020000120 | 132, 134 |
| 3170000123 | 104 |
| 3170000124 | 104 |
| 3170000125 | 104 |
| 3170000220 | 88, 96 |
| 3170000221 | 96 |
| 3170000223 | 96 |
| 3170000224 | 96 |
| 3170000400 | 108 |
| 3170000401 | 108 |
| 3170000406 | 108 |
| 3170000407 | 100, 108 |
| 3170000430 | 92 |
| 3170000431 | 92 |
| 3170000432 | 92 |
| 3170000433 | 88, 92 |
| 3178000226 | 130 |


Eastern Wrecker Sales, Inc.
Clayton, NC 919-553-4038
www.easternwrecker.com

| Part Number | Page |
|---|---|
| 3178000240 | 136 |
| 3178000460 | 176 |
| 3178000499 | 136 |
| 3178000513 | 176 |
| 3249000012 | 112 |
| 3249000015 | 112 |
| 3249000037 | 58, 64 |
| 3249000046 | 58, 64 |
| 3263000118 | 28 |
| 3274000011 | 162 |
| 3314000010 | 224 |
| 3415000047 | 170 |
| 3484000048 | 132 |
| 3484000049 | 132 |
| 3484000072 | 134 |
| 3484000073 | 134 |
| 3502740106 | 164 |
| 3507100001 | 100, 104 |
| 3551000036 | 130 |
| 3555000007 | 154, 156 |
| 3555000008 | 154, 156, 158, 160 |
| 3561000008 | 132, 134 |
| 3561000015 | 134 |
| 3561000017 | 80 |
| 3691000126 | 28 |
| 3691000144 | 136 |
| 3691000145 | 136 |
| 3691000160 | 88 |
| 3691000169 | 112 |
| 3691000171 | 80 |
| 3691000174 | 32 |
| 3691000223 | 24 |
| 3691000227 | 20 |
| 3691000228 | 20 |
| 3691000231 | 84 |
| 3691000232 | 100 |
| 3691000234 | 58, 64 |
| 3691000247 | 24 |
| 3691000252 | 50 |
| 3691000253 | 24 |
| 3691000267 | 28 |
| 3706000080 | 136 |
| 3706000177 | 92, 96 |
| 3706000178 | 92, 96 |
| 3706000179 | 92, 96 |
| 3706000180 | 92, 96 |
| 3706000241 | 54 |
| 3706000261 | 28 |
| 3706000348 | 24 |
| 3899000160 | 182 |
| 3899000161 | 182 |
| 3911000068 | 162 |
| 3912000033 | 132, 134 |
| 3912000034 | 112 |
| 3912000038 | 132, 134 |
| 3913000094 | 140 |
| 4017000719 | 172 |
| 4017001493 | 176 |
| 4017001549 | 176 |
| 4062000173 | 158, 160 |
| 4062000174 | 154, 156, 158, 160 |
| 4062000368 | 166 |
| 4062000522 | 54 |
| 4062000589 | 54 |
| 4062000615 | 176 |
| 4062000624 | 158, 160 |
| 4062000715 | 54 |
| 4062000717 | 210 |
| 4120000021 | 50 |
| 4178000222 | 158, 160 |
| 4178000225 | 154, 156, 158, 160 |
| 4178000229 | 166 |
| 4178000240 | 166 |
| 4178000242 | 172 |
| 4178000337 | 166 |
| 4178000349 | 196 |
| 4178000402 | 242 |
| 4178000553 | 158, 160 |
| 4178000555 | 158, 160 |
| 4178000556 | 158, 160 |
| 4178000564 | 160 |
| 4178000583 | 158 |
| 4178000584 | 160 |
| 4178000594 | 158 |
| 4178000659 | 248 |
| 4178000660 | 176 |
| 4178000661 | 172 |
| 4178000678 | 174, 176 |
| 4178000699 | 224 |
| 4178000715 | 176 |
| 4178000720 | 176 |
| 4178000761 | 176 |
| 4178000811 | 54 |
| 4178000854 | 158 |
| 4249000002 | 112 |
| 4314000141 | 152 |
| 4415000017 | 170 |
| 4415000019 | 170 |
| 4415000046 | 168 |
| 4415000053 | 170 |
| 4415000054 | 170 |
| 4415000055 | 170 |
| 4561000012 | 132, 134 |
| 4567110065 | 197 |
| 4567112024 | 197 |
| 4567112038 | 197 |
| 4567120022 | 197 |
| 4567120069 | 196 |
| 4567120071 | 197 |
| 4567122064 | 197 |
| 4567130135 | 196 |
| 4567132085 | 196 |
| 4567150016 | 196 |
| 4567182031 | 197 |
| 4569140046 | 196 |
| 4569160030 | 196 |
| 4569180044 | 197 |
| 4570000167 | 197 |
| 4570000218 | 197 |
| 4570000361 | 196 |
| 4619000006 | 197 |
| 4632000013 | 154, 156 |
| 4632000024 | 166 |
| 4632000025 | 166 |
| 4636000031 | 146, 148, 150 |
| 4636000032 | 146, 148 |
| 4679000120 | 146, 148, 150, 152, 164 |
| 4679000121 | 150, 152 |
| 4679000122 | 146, 148 |
| 4679000127 | 84 |
| 4679000140 | 54 |
| 4679000146 | 104 |
| 4679000147 | 104 |
| 4679000148 | 170 |
| 4679000158 | 92, 96 |
| 4679000159 | 92, 96 |
| 4679000161 | 92, 96 |
| 4679000181 | 166 |
| 4679000188 | 166 |
| 4679000205 | 92, 96 |
| 4679000206 | 92, 96 |
| 4679000243 | 24 |
| 4679000245 | 84 |
| 4679000260 | 158, 160 |
| 4679000261 | 158, 160 |
| 4679000277 | 108 |
| 4679000293 | 108 |
| 4679000309 | 154 |


Eastern Wrecker Series, Inc.
Clayton, NC 919-553-2038
www.easternwrecker.com

| Part Number | Page |
|---|---|
| 4679000310 | 156 |
| 4679000311 | 156 |
| 4679000313 | 54 |
| 4679000314 | 54 |
| 4679000319 | 54 |
| 4679000320 | 182 |
| 4679000326 | 54 |
| 4686000073 | 158, 160 |
| 4686000074 | 154, 156 |
| 4686000077 | 146 |
| 4686000078 | 148 |
| 4686000133 | 166 |
| 4686000134 | 166 |
| 4686000185 | 166 |
| 4686000186 | 166 |
| 4686000210 | 158, 160 |
| 4686000212 | 158 |
| 4686000215 | 158, 160 |
| 4691000200 | 28 |
| 4691000242 | 140 |
| 4691000274 | 132, 134 |
| 4691000285 | 54 |
| 4691000290 | 100 |
| 4691000291 | 100 |
| 4691000292 | 104 |
| 4691000293 | 104, 108 |
| 4691000311 | 88 |
| 4691000316 | 92, 96 |
| 4691000317 | 88 |
| 4691000318 | 92, 96 |
| 4691000321 | 108 |
| 4691000416 | 54 |
| 4691000417 | 54 |
| 4691000450 | 44 |
| 4691000489 | 24 |
| 4691000556 | 50 |
| 4691960030 | 62 |
| 4695000026 | 252 |
| 4705000705 | 162 |
| 4706001815 | 172 |
| 4706002207 | 104 |
| 4706002208 | 104 |
| 4706002209 | 104 |
| 4706002210 | 104 |
| 4706002211 | 104 |
| 4706002467 | 92, 96 |
| 4706003144 | 92, 96 |
| 4706003708 | 92, 96, 104 |
| 4706003709 | 92, 96, 104 |
| 4706003710 | 104 |
| 4706003716 | 28 |
| 4706003717 | 104 |
| 4706003718 | 104 |
| 4706003719 | 92, 96 |
| 4706003720 | 92, 96 |
| 4706003721 | 92, 96 |
| 4706003722 | 92, 96 |
| 4706003723 | 92, 96 |
| 4706003724 | 92, 96 |
| 4706003725 | 92, 96 |
| 4706003844 | 196 |
| 4706004170 | 44 |
| 4706004173 | 44 |
| 4706004174 | 44 |
| 4706005262 | 108 |
| 4706005263 | 108 |
| 4706005281 | 108 |
| 4706005393 | 158, 160 |
| 4706005490 | 152 |
| 4706006033 | 226 |
| 4754000004 | 32, 54 |
| 4754000006 | 24 |
| 4763000295 | 44 |
| 4811000335 | 166 |
| 4811000336 | 166 |
| 4811000337 | 166 |
| 4811000355 | 166 |
| 4811000408 | 150, 152 |
| 4811000942 | 44 |
| 4811000944 | 146, 148 |
| 4811000947 | 166 |
| 4811001026 | 174 |
| 4811001027 | 174 |
| 4812000052 | 158, 160, 166 |
| 4812000057 | 104 |
| 4812000120 | 180 |
| 4831000108 | 58, 64 |
| 4831000115 | 112 |
| 4912000369 | 44 |
| 4949000041* | 140 |
| 4949000042* | 140 |
| 4949000045 | 112 |
| 4949000055 | 32 |
| 4990000001 | 44 |
| 5526000553 | 224, 236 |
| 6906960019 | 124 |
| 7007000036 | 10 |
| 7007000055 | 130 |
| 7007000056 | 130 |
| 7007960040 | 66 |
| 7011000007 | 194 |
| 7056000003 | 138 |
| 7056000004 | 138 |
| 7056000005 | 138 |
| 7056000006 | 138 |
| 7075000003 | 224 |
| 7075000006 | 224 |
| 7082000005 | 210 |
| 7105163650 | 60 |
| 7105180850 | 92, 96 |
| 7108180850 | 54, 104, 108 |
| 7108181050 | 104 |
| 7110201423 | 114 |
| 7110201823 | 68 |
| 7111140613 | 224 |
| 7111140813 | 224 |
| 7111141050 | 170 |
| 7114080418 | 182, 184 |
| 7114100318 | 166 |
| 7114100418 | 54, 166 |
| 7114100518 | 158, 160, 182, 224 |
| 7114100618 | 154, 156, 158, 160, 184, 216 |
| 7114100818 | 44, 154, 156, 166, 182 |
| 7114101618 | 44 |
| 7114140418 | 92, 96, 166 |
| 7114140518 | 28, 104, 108, 154, 156, 158, 160 |
| 7114140618 | 24, 210, 238 |
| 7114140650 | 154, 156, 158, 160 |
| 7114140818 | 42, 54, 146, 148, 158, 160 |
| 7114140850 | 150, 152, 158, 160, 176 |
| 7114141018 | 166 |
| 7114141218 | 54 |
| 7114141850 | 168 |
| 7114150650 | 166 |
| 7114150818 | 226 |
| 7114150850 | 158, 160 |
| 7114160618 | 252 |
| 7114160818 | 24 |
| 7114161050 | 154, 156, 158, 160, 176 |
| 7114161250 | 180 |
| 7115101411 | 184 |
| 7115140650 | 92, 96, 104, 108, 184 |
| 7115140850 | 44, 210, 246, 248 |
| 7115141250 | 224 |
| 7115141450 | 44 |


Eastern Wrecker Sales, Inc.
Clayton, NC 919-553-2038
www.easternwreckers.com

| Part Number | Page |
|---|---|
| 7115141850 | 170 |
| 7115142050 | 112 |
| 7115150650 | 10, 70, 184 |
| 7115150664 | 10 |
| 7115150850 | 36, 172, 226 |
| 7115150864 | 128 |
| 7115151050 | 196 |
| 7115151250 | 226 |
| 7115160623 | 84 |
| 7115160650 | 32, 210 |
| 7115160850 | 14, 18, 44, 174 |
| 7115161050 | 210 |
| 7115161223 | 80 |
| 7115161250 | 176, 210, 242 |
| 7115161450 | 80, 84, 210 |
| 7115161650 | 28, 197 |
| 7115163250 | 210 |
| 7115180650 | 54 |
| 7115180850 | 54, 80, 88, 242 |
| 7115181050 | 166, 176 |
| 7115181250 | 80, 84, 112, 152 |
| 7115181450 | 54, 240 |
| 7115181650 | 78, 126 |
| 7115181850 | 14 |
| 7115182050 | 162 |
| 7115182250 | 66 |
| 7115182850 | 58, 64 |
| 7115185650 | 60 |
| 7115201050 | 50 |
| 7115201250 | 80, 84 |
| 7115201650 | 38 |
| 7115201850 | 120 |
| 7115202250 | 120 |
| 7115202850 | 142, 144, 162 |
| 7115203250 | 38 |
| 7115220850 | 84, 100 |
| 7115222450 | 74 |
| 7115222650 | 74 |
| 7115241650 | 60 |
| 7118140427 | 54 |
| 7118151250 | 172 |
| 7118165250 | 122 |
| 7118172050 | 66, 124 |
| 7118180820 | 54 |
| 7118181205 | 66, 124 |
| 7118181250 | 138 |
| 7118201616 | 112 |
| 7118221650 | 36 |
| 7118221816 | 58, 64 |
| 7118221850 | 20 |
| 7118222416 | 58 |
| 7118222816 | 64 |
| 7118225650 | 50 |
| 7118267250 | 136 |
| 7120000033 | 184 |
| 7120000035 | 184 |
| 7120000036 | 136 |
| 7120000040 | 54 |
| 7120000047 | 210, 224 |
| 7120000053 | 112 |
| 7120000062 | 8 |
| 7178000023 | 154, 156, 158, 160, 166 |
| 7178000025 | 184 |
| 7178000038 | 44 |
| 7189000014 | 112 |
| 7189000015 | 146, 148, 166 |
| 7189000017 | 84 |
| 7209000022 | 140 |
| 7209000023 | 10 |
| 7209000024 | 10 |
| 7209000029 | 88, 100 |
| 7209000033 | 10 |
| 7247000095 | 252 |
| 7248000149 | 58, 64 |
| 7253000002 | 20, 24, 32, 50, 54, 58, 64, 80, 84, 88, 100, 112 |
| 7262000025 | 80, 84 |
| 7262000026 | 130 |
| 7274000026 | 248 |
| 7274000030 | 10 |
| 7274000076 | 196 |
| 7274000088 | 10 |
| 7277000012 | 44 |
| 7280000020 | 170 |
| 7293000006 | 8 |
| 7295000029 | 226 |
| 7295000146 | 224 |
| 7312000015 | 128 |
| 7312000016 | 128 |
| 7312000017 | 226 |
| 7320000006 | 28, 30 |
| 7320000026 | 104, 106 |
| 7320000039 | 88, 90 |
| 7320000040 | 80, 82 |
| 7320000042 | 96, 98 |
| 7320000063 | 84, 86 |
| 7320000068 | 108, 110 |
| 7320000069 | 44 |
| 7320000076 | 92, 94 |
| 7320000085 | 54, 56 |
| 7320000096 | 100, 102 |
| 7330000108 | 258 |
| 7330000143 | 258 |
| 7330000208 | 258 |
| 7330000209 | 258 |
| 7330000210 | 258 |
| 7330000278 | 132, 134 |
| 7330000550 | 132, 134 |
| 7330000688 | 258 |
| 7330000689 | 258 |
| 7330000755 | 236 |
| 7345001704 | 236 |
| 7345001914 | 252 |
| 7345222202 | 184 |
| 7345232202 | 184 |
| 7345242202 | 184 |
| 7346000035 | 236, 248, 250 |
| 7346000037 | 236, 248, 250 |
| 7346000039 | 184, 236, 252 |
| 7346000045 | 184 |
| 7346000055 | 128 |
| 7346000056 | 44 |
| 7346000078 | 128 |
| 7346000087 | 236 |
| 7346000094 | 236, 248, 250 |
| 7346000099 | 236 |
| 7413000002 | 146, 148, 150, 152, 158, 160, 176, 210 |
| 7413000003 | 174, 176 |
| 7415000010 | 170 |
| 7415000013 | 168, 170 |
| 7415000014 | 168, 170 |
| 7415000032 | 170 |
| 7430000004 | 196 |
| 7440000000 | 20, 50 |
| 7440030000 | 32, 50, 54, 58, 64, 80, 84, 88, 92, 96, 100, 104, 108, 112 |
| 7440030400 | 24, 94, 98 |
| 7440300000 | 140 |
| 7443000108 | 196 |
| 7443000139 | 226 |
| 7443000145 | 128 |
| 7443000146 | 128 |
| 7443000148 | 128, 226 |
| 7443000154 | 226 |
| 7443000155 | 226 |
| 7443000156 | 226 |


Eastern Wrecker Sales, Inc.
Clayton NC 919-553-2038
www.easternwrecker.com

| Part Number | Page |
|---|---|
| 7443000158 | 196 |
| 7443000173 | 40, 196, 226 |
| 7443000175 | 226 |
| 7443000178 | 226 |
| 7443000204 | 78, 126 |
| 7443000205 | 78, 126 |
| 7443000243 | 226 |
| 7443000258 | 196 |
| 7443000270 | 226 |
| 7443000329 | 226 |
| 7443000396 | 226 |
| 7443000397 | 226 |
| 7443000408 | 196 |
| 7443000414 | 40 |
| 7443000448 | 226 |
| 7444020013 | 226 |
| 7444030037 | 226 |
| 7445040421 | 196 |
| 7445040425 | 196 |
| 7445040445 | 66, 124 |
| 7445060435 | 128 |
| 7445060643 | 196, 197 |
| 7445060648 | 196 |
| 7445080643 | 196 |
| 7445080644 | 196 |
| 7445080837 | 196 |
| 7445080843 | 196 |
| 7445081039 | 196 |
| 7445081043 | 196 |
| 7445100843 | 196, 197 |
| 7445100845 | 197 |
| 7445101018 | 196 |
| 7445101043 | 40, 196, 197 |
| 7445101045 | 40, 197 |
| 7445161243 | 196 |
| 7445161245 | 196 |
| 7445161620 | 196 |
| 7445161622 | 196 |
| 7445161637 | 196 |
| 7446502518 | 128, 226 |
| 7454000003 | 130 |
| 7454000004 | 130 |
| 7454000005 | 130 |
| 7454000006 | 130 |
| 7457000006 | 184, 224, 252 |
| 7457000011 | 184 |
| 7457000012 | 184 |
| 7457000019 | 184 |
| 7457000023 | 184 |
| 7470000002 | 196 |
| 7470000004 | 196 |
| 7470000006 | 226 |
| 7470000014 | 54 |
| 7470000019 | 54 |
| 7491000207 | 28 |
| 7493000003 | 246 |
| 7493000011 | 184 |
| 7493000014 | 184 |
| 7493000020 | 224 |
| 7493000021 | 250 |
| 7493000026 | 184 |
| 7494000019 | 142, 144 |
| 7552000339 | 254 |
| 7552000349 | 184 |
| 7552000354 | 184 |
| 7552000355 | 184 |
| 7555000002 | 158, 160, 166 |
| 7561000020 | 138 |
| 7565000014 | 128, 226 |
| 7565000016 | 197, 226 |
| 7565000019 | 222 |
| 7577000063 | 86, 102 |
| 7577000145 | 128 |
| 7577000167 | 30 |
| 7577000273 | 210 |
| 7577000368 | 134 |
| 7577250204 | 90 |
| 7577250255 | 82 |
| 7577250271 | 94, 98 |
| 7577250334 | 106, 110 |
| 7585000009 | 154, 156, 158, 160 |
| 7585000012 | 182 |
| 7585000016 | 166 |
| 7590000049 | 222 |
| 7590000094 | 184 |
| 7590000105 | 184 |
| 7590000262 | 184 |
| 7590000282 | 184 |
| 7590000284 | 184 |
| 7590000304 | 184 |
| 7590000317 | 184 |
| 7590000350 | 254, 256 |
| 7590200161 | 162 |
| 7595000005 | 154, 156, 158, 160 |
| 7595000011 | 166 |
| 7632046009 | 150, 152 |
| 7636000008 | 142, 144, 162 |
| 7636000031 | 152 |
| 7638000012 | 172 |
| 7660040000 | 210, 224 |
| 7660082604 | 182, 184 |
| 7660102601 | 184, 216 |
| 7660102604 | 44, 154, 156, 158, 160, 166, 182, 224 |
| 7660140001 | 44, 166 |
| 7660140230 | 210 |
| 7660142600 | 194 |
| 7660142601 | 44, 54, 170, 184, 210, 224, 248 |
| 7660142604 | 112, 150, 152, 154, 156, 158, 160, 166, 168, 246 |
| 7660150001 | 226 |
| 7660152601 | 128, 172, 196 |
| 7660152604 | 154, 156, 158, 160, 166, 226 |
| 7660160000 | 18, 210 |
| 7660162601 | 14, 28, 44, 160, 210, 242 |
| 7660162604 | 154, 156, 158, 160, 176, 180 |
| 7660170230 | 44 |
| 7660180001 | 44 |
| 7660180200 | 44 |
| 7660180230 | 92, 96 |
| 7660182301 | 162, 166, 176 |
| 7660182601 | 14, 54, 58, 64, 112, 152, 240, 242 |
| 7660200001 | 78, 120, 126, 142, 144, 162 |
| 7660200200 | 78, 126, 196 |
| 7660202601 | 38, 80, 84 |
| 7660220001 | 74 |
| 7660222308 | 58, 64 |
| 7660222601 | 20, 50, 80, 84 |
| 7660262600 | 24 |
| 7661000002 | 184 |
| 7661000018 | 112 |
| 7661000019 | 92, 96, 108, 238 |
| 7661000022 | 10 |
| 7661000023 | 184, 224 |
| 7661000027 | 10 |
| 7661000041 | 226 |
| 7663000006 | 14 |
| 7686000013 | 148 |
| 7686000014 | 146 |
| 7686000015 | 148 |
| 7686000016 | 146 |
| 7686000017 | 148 |
| 7686000018 | 146 |


Eastern Wrecker Sales, Inc.
Clayton, NC 919-553-2938
www.easternwrecker.com

| Part Number | Page |
|---|---|
| 7686000019 | 150, 152 |
| 7686000031 | 164 |
| 7686000041 | 146 |
| 7686000042 | 148 |
| 7686000050 | 164 |
| 7686000081 | 150, 152 |
| 7686000082 | 150, 152 |
| 7686000083 | 150, 152 |
| 7686000084 | 150, 152 |
| 7686000085 | 152 |
| 7686000086 | 150, 152 |
| 7690000810 | 166 |
| 7690021210 | 44 |
| 7690144840 | 54 |
| 7690153245 | 70 |
| 7691000019 | 28 |
| 7691000020 | 130, 132, 134 |
| 7691000021 | 130, 132, 134 |
| 7691000022 | 130 |
| 7691000025 | 136 |
| 7691000026 | 132, 134 |
| 7691000047 | 32 |
| 7691000048 | 24 |
| 7691000049 | 44 |
| 7691000050 | 44 |
| 7701000003 | 210 |
| 7740000001 | 184, 224, 252 |
| 7740000003 | 14, 216 |
| 7740000008 | 184 |
| 7754000008 | 28 |
| 7754000009 | 210 |
| 7754000014 | 54 |
| 7754000018 | 88, 100 |
| 7754000033 | 28 |
| 7754000042 | 140 |
| 7754000043 | 92, 96, 104, 108 |
| 7754000048 | 58, 64 |
| 7754000049 | 112 |
| 7754000051 | 88, 100 |
| 7754000055 | 54 |
| 7754000058 | 24, 112 |
| 7754000083 | 58, 64 |
| 7759000004 | 132, 134, 258 |
| 7785152420 | 196 |
| 7785181200 | 60 |
| 7786000008 | 92, 96 |
| 7790060676 | 196 |
| 7790100856 | 14, 148, 150, 152, 184, 224 |
| 7790141056 | 170 |
| 7790141251 | 146, 148, 150, 152, 254 |
| 7790141651 | 146, 148, 150, 152, 164 |
| 7790142051 | 146, 148, 170 |
| 7796000012 | 210 |
| 7796000031 | 166 |
| 7796000038 | 154, 156, 158, 160 |
| 7796000078 | 146, 148 |
| 7796000084 | 182 |
| 7796000099 | 182 |
| 7796250068 | 86 |
| 7806000008 | 210 |
| 7809000006 | 112 |
| 7809000018 | 58, 64 |
| 7821000003 | 182 |
| 7831000040 | 166 |
| 7843000020 | 158, 160, 166 |
| 7843000022 | 154, 156 |
| 7843000026 | 158, 160 |
| 7843000038 | 44 |
| 7865000001 | 154, 156, 158, 160, 166 |
| 7870000041 | 44 |
| 7870000043 | 184 |
| 7870000123 | 184 |
| 7870000128 | 236 |
| 7870000129 | 236 |
| 7870000143 | 184 |
| 7894000004 | 196, 224 |
| 7894000010 | 184, 246, 248, 250, 256 |
| 7894000028 | 132, 134 |
| 7894000031 | 184 |
| 7894000037 | 132, 134 |
| 7894000041 | 132 |
| 7894000042 | 184, 242, 254 |
| 7894000057 | 134 |
| 7894000060 | 134 |
| 7935000120 | 226 |
| 7935000273 | 44 |
| 7949000015 | 14 |
| 7949000016 | 14 |
| 7949000019 | 162 |
| 7949000020 | 142, 144, 162 |
| 7949000022 | 146, 148, 150, 152, 170, 254 |
| 7949000025 | 28, 158 |
| 7949000053 | 184 |
| 7949000072 | 242 |
| 7949000074 | 154, 156, 160 |
| 7950000000 | 100 |
| 7950100103 | 182 |
| 7950100143 | 158, 160 |
| 7950100153 | 154, 156 |
| 7950140000 | 42, 54, 92, 96, 104, 108, 210 |
| 7950140003 | 146, 148, 150, 152, 158, 160 |
| 7950140141 | 44, 170, 184, 194 |
| 7950140143 | 146, 148, 158, 160, 238, 246, 248 |
| 7950140153 | 28 |
| 7950140161 | 42, 210, 224 |
| 7950140163 | 150, 152, 154, 156, 158, 160, 166, 176 |
| 7950140503 | 166 |
| 7950150000 | 10, 36, 184 |
| 7950150143 | 226 |
| 7950150161 | 128, 172, 184, 196 |
| 7950150163 | 158 |
| 7950151063 | 160 |
| 7950160000 | 18, 24, 32, 44, 122, 174, 176, 197, 210 |
| 7950160003 | 252 |
| 7950160141 | 24, 44, 80, 84 |
| 7950160161 | 14, 18, 28, 210, 242 |
| 7950160163 | 154, 156, 158, 160, 180, 252 |
| 7950170000 | 66, 124 |
| 7950170153 | 96 |
| 7950180000 | 54, 66, 76, 78, 80, 84, 88, 108, 126, 138 |
| 7950180141 | 14, 44 |
| 7950180150 | 112 |
| 7950180153 | 58, 64, 92, 104, 166, 176 |
| 7950180161 | 54, 80, 84, 88, 152, 240 |
| 7950180252 | 162 |
| 7950180800 | 66, 124 |
| 7950200000 | 38, 50, 120 |
| 7950200141 | 50 |
| 7950200151 | 78, 126 |
| 7950200161 | 38, 142, 144 |
| 7950220000 | 20, 74, 84 |
| 7950220141 | 20, 50, 80, 84, 100 |
| 7950220142 | 36 |
| 7950220151 | 74 |
| 7970000069 | 112 |
| 7970000169 | 64 |
| 7970140151 | 168 |


Eastern Wrecker Sales, Inc.
Clayton, NC 919-553-4038
www.easternwrecker.com

| Part Number | Page |
|---|---|
| 7978000011 | 184 |
| 8597650001 | 184 |
| 8597650002 | 248, 250, 256 |
| 8632000011 | 144, 162 |
| 8632000012 | 224 |
| 8977010103 | 236 |
| 8977030200 | 252 |
| 8977030300 | 252 |
| 8977500100 | 236 |
| 9007250005 | 94, 98 |
| 9020960002 | 78, 126 |
| 9064960001 | 78 |
| 9064960007 | 126 |
| 9064960008 | 62 |
| 9073960002 | 74 |
| 9073960003 | 120 |
| 9073960004 | 120 |
| 9082960013 | 66, 124 |
| 9082960014 | 66, 70 |
| 9082960015 | 76 |
| 9082960018 | 116, 124 |
| 9120960019 | 78, 126 |
| 9120960020 | 74 |
| 9120960024 | 60 |
| 9120960042 | 62 |
| 9120960054 | 60 |
| 9120960063 | 78, 126 |
| 9154960027 | 70 |
| 9177960001 | 70 |
| 9177960002 | 66 |
| 9177960003 | 116 |
| 9177960004 | 124 |
| 9178960011 | 78, 126 |
| 9183960001 | 66, 76, 122 |
| 9209960025 | 116 |
| 9209960026 | 122 |
| 9254250007 | 86, 102 |
| 9254250009 | 94 |
| 9280960002 | 68, 114 |
| 9281960004 | 70 |
| 9295310027 | 224 |
| 9295310029 | 224 |
| 9295310030 | 224 |
| 9295310031 | 224 |
| 9295310061 | 224 |
| 9295310068 | 224 |
| 9295310069 | 224 |
| 9309960011 | 122 |
| 9314960022 | 122 |
| 9330960006 | 116 |
| 9443960006 | 66, 124 |
| 9443960010 | 60 |
| 9443960019 | 60 |
| 9443960020 | 62 |
| 9443960021 | 62 |
| 9472960029 | 66 |
| 9472960030 | 70 |
| 9472960032 | 66 |
| 9472960033 | 66 |
| 9472960036 | 70 |
| 9472960052 | 116 |
| 9472960053 | 116 |
| 9472960054 | 122 |
| 9472960055 | 116 |
| 9472960056 | 116 |
| 9552310033 | 224 |
| 9553250009 | 30 |
| 9553250010 | 106, 110 |
| 9553250015 | 94, 98 |
| 9553250016 | 98 |
| 9570960005 | 62 |
| 9571960006 | 66, 124 |
| 9575960012 | 114 |
| 9577760232 | 222 |
| 9577960113 | 74, 78 |
| 9577960119 | 66 |
| 9577960120 | 66, 124 |
| 9577960139 | 124 |
| 9661960033 | 74 |
| 9690960039 | 78, 126 |
| 9691960019 | 78, 126 |
| 9691960021 | 66, 124 |
| 9691960032 | 62 |
| 9698250014 | 90 |
| 9698250017 | 82 |
| 9698250018 | 94, 98 |
| 9698250019 | 94, 98 |
| 9698960008 | 66, 124 |
| 9698960009 | 70 |
| 9698960015 | 122 |
| 9698960016 | 122 |
| 9701960010 | 66 |
| 9701960011 | 76, 122 |
| 9701960012 | 76, 122 |
| 9701960013 | 66 |
| 9701960018 | 122 |
| 9706960027 | 66 |
| 9724250014 | 30 |
| 9754250009 | 30, 56, 106, 110 |
| 9754250011 | 86, 102 |
| 9754250014 | 56, 106, 110 |
| 9754250015 | 30, 94, 98 |
| 9754250017 | 86, 102 |
| 9754250043 | 82, 90 |
| 9754250045 | 82, 90 |
| 9754250049 | 94, 98 |
| 9754250054 | 56 |
| 9754250055 | 56 |
| 9754960026 | 122 |
| 9754960029 | 66, 70 |
| 9754960030 | 76 |
| 9754960046 | 122 |
| 9754960047 | 122 |
| 9763250009 | 30 |
| 9763250022 | 82 |
| 9763250025 | 98 |
| 9763250026 | 98 |
| 9796250057 | 30, 106, 110 |
| 9796250058 | 56, 106, 110 |
| 9796250061 | 30 |
| 9796250062 | 82, 86, 90, 102 |
| 9796250066 | 30 |
| 9796250068 | 102 |
| 9796250071 | 56, 82, 90 |
| 9796250073 | 30, 106, 110 |
| 9796250080 | 30, 94, 98 |
| 9796250081 | 106, 110 |
| 9796250083 | 86, 102 |
| 9796250084 | 56 |
| 9796250113 | 82, 90 |
| 9796250117 | 82, 90 |
| 9796250124 | 82, 90 |
| 9796250125 | 82 |
| 9796250133 | 94, 98 |
| 9796250135 | 94, 98 |
| 9796250137 | 94, 98 |
| 9796250138 | 94, 98 |
| 9796250149 | 56 |
| 9796960085 | 66, 70, 76 |
| 9796960087 | 66, 70 |
| 9796960088 | 66, 124 |
| 9796960089 | 114 |
| 9796960090 | 66 |
| 9796960093 | 70 |
| 9796960119 | 122 |
| 9796960120 | 116, 122 |
| 9796960121 | 116 |
| 9796960157 | 60 |


Eastern Wrecker Sales, Inc.
Clayton NC 919-553-2038
www.easternwrecker.com

| Part Number | Page |
|---|---|
| 9796960159 | 60 |
| 9806960013 | 66 |
| 9806960014 | 66 |
| 9806960015 | 70 |
| 9806960020 | 118 |
| 9806960021 | 116 |
| 9831960007 | 74 |
| 9831960009 | 78, 126 |
| 9831960018 | 114 |
| 9843960023 | 78, 126 |
| 9843960025 | 70 |
| 9843960032 | 122 |
| 9912250004 | 30 |
| 9912250018 | 82 |
| 9912250021 | 98 |
| 9912960010 | 78, 126 |
| 9935250025 | 98, 106, 110 |
| 9935740034 | 222 |
| 9935960026 | 66, 124 |
| 9935960067 | 60 |
| 9935960068 | 60 |
| 9949960012 | 78, 126 |
| 9949960013 | 70, 76 |
| 9949960027 | 116 |
| 9949960028 | 116, 122, 124 |
| 9949960044 | 60 |
| 9949960050 | 70, 78, 126 |
| 9949960051 | 74 |
| 9970418177 | 62 |
| 9970456008 | 60 |
| 9970960020 | 114 |
| 9970960027 | 60 |

| Part Number | Page |
|---|---|

| Part Number | Page |
|---|---|

| Part Number | Page |
|---|---|

Eastern Wrecker Sales, Inc.
919-553-4038
Clayton, NC
www.easternwrecker.com

Eastern Wrecker Sales, Inc.
Clayton, NC
919-553-4038
www.easternwrecker.com

Eastern Wrecker Sales, Inc.
Clayton, NC
919-553-4038
www.easternwrecker.com

Eastern Wrecker Sales, Inc.
Clayton, NC
919-553-4038
www.easternwrecker.com

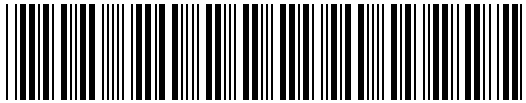

5376000164- 0