PYLON INSTALLATION - 34” PYLON

ITEM	PART NO.	DESCRIPTION	QTY	REV
	1001209068	Pylon Installation - 34” Pylon	Ref	B
1	1001213102	34” Pylon	1	
13	7701000048	Plug	8	
14	7701000049	Plug	2	
15	7701000056	Plug	4	

Eastern Wrecker Sales Inc

PYLON INSTALLATION - 34” PYLON

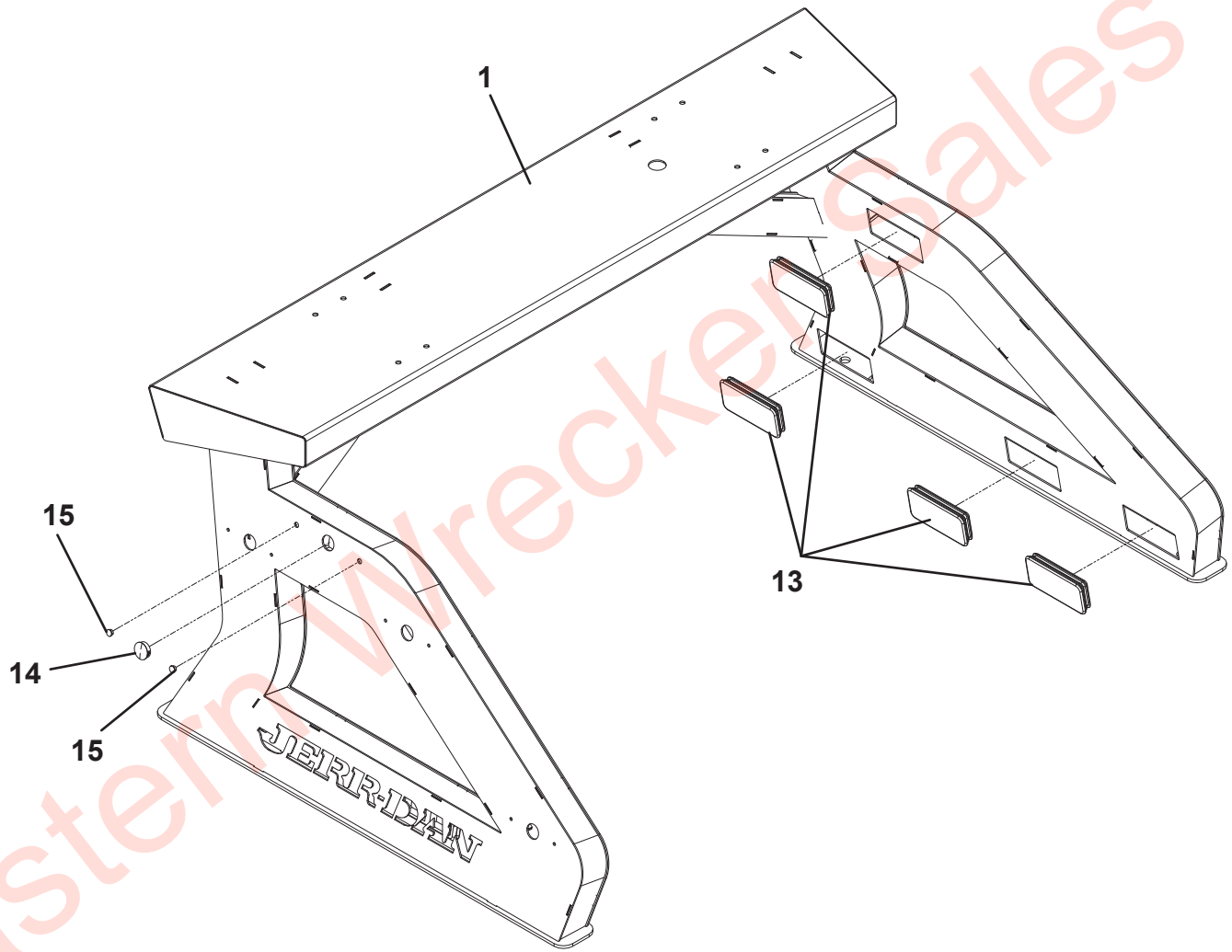

Eastern Wrecker Sales Inc

PYLON INSTALLATION - 39” PYLON

ITEM	PART NO.	DESCRIPTION	QTY	REV
	1001209069	Pylon Installation - 39” Pylon	Ref	B
1	1001213509	39” Pylon	1	
13	7701000048	Plug	8	
14	7701000049	Plug	2	
15	7701000056	Plug	4	

Eastern Wrecker Sales Inc

PYLON INSTALLATION - 39” PYLON

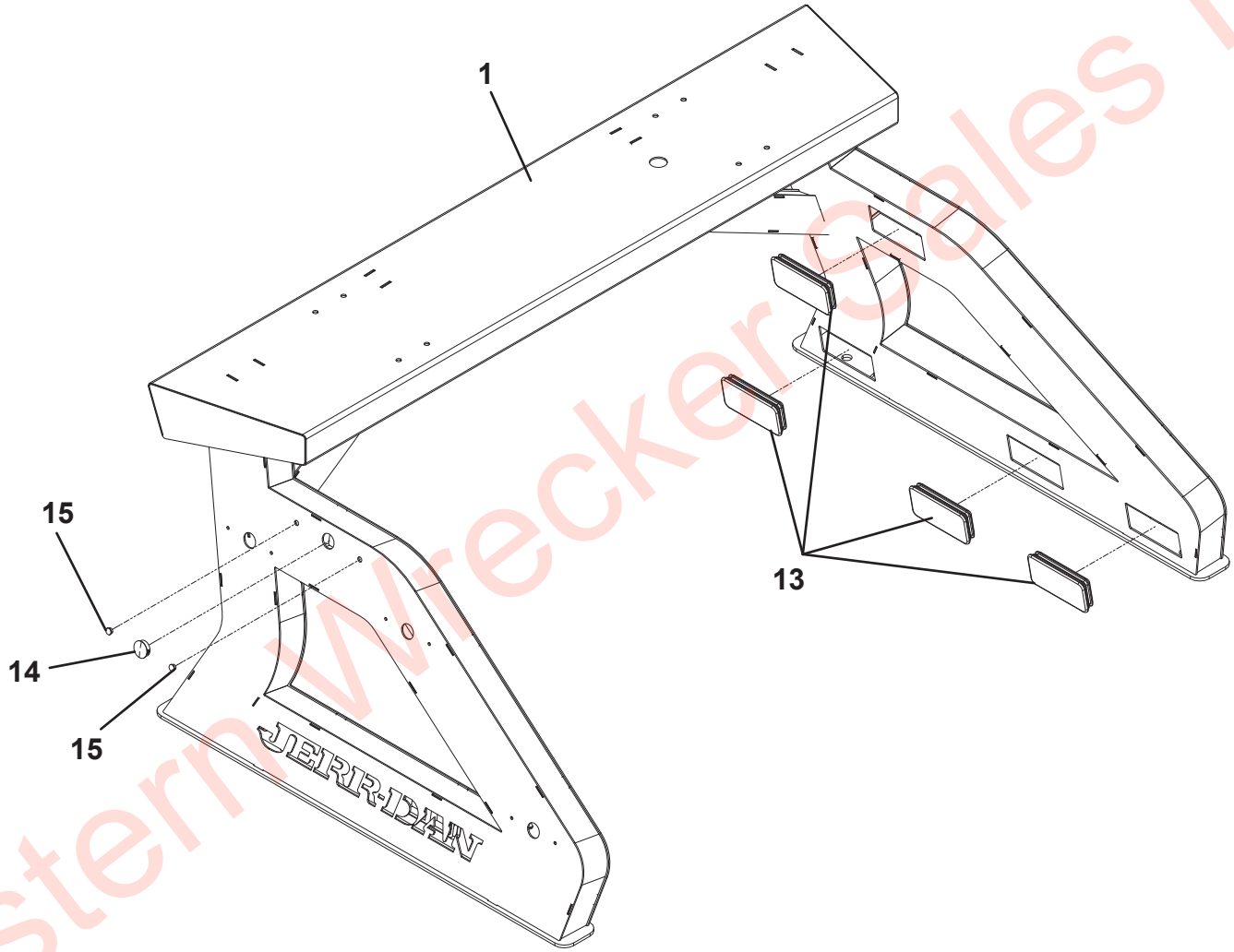

Eastern Wrecker Sales Inc

PYLON INSTALLATION - 57” PYLON

ITEM	PART NO.	DESCRIPTION	QTY	REV
	1001209070	Pylon Installation - 57” Pylon	Ref	B
1	1001214577	57” Pylon	1	
13	7701000048	Plug	8	
14	7701000049	Plug	2	
15	7701000056	Plug	4	

Eastern Wrecker Sales Inc

PYLON INSTALLATION - 57” PYLON

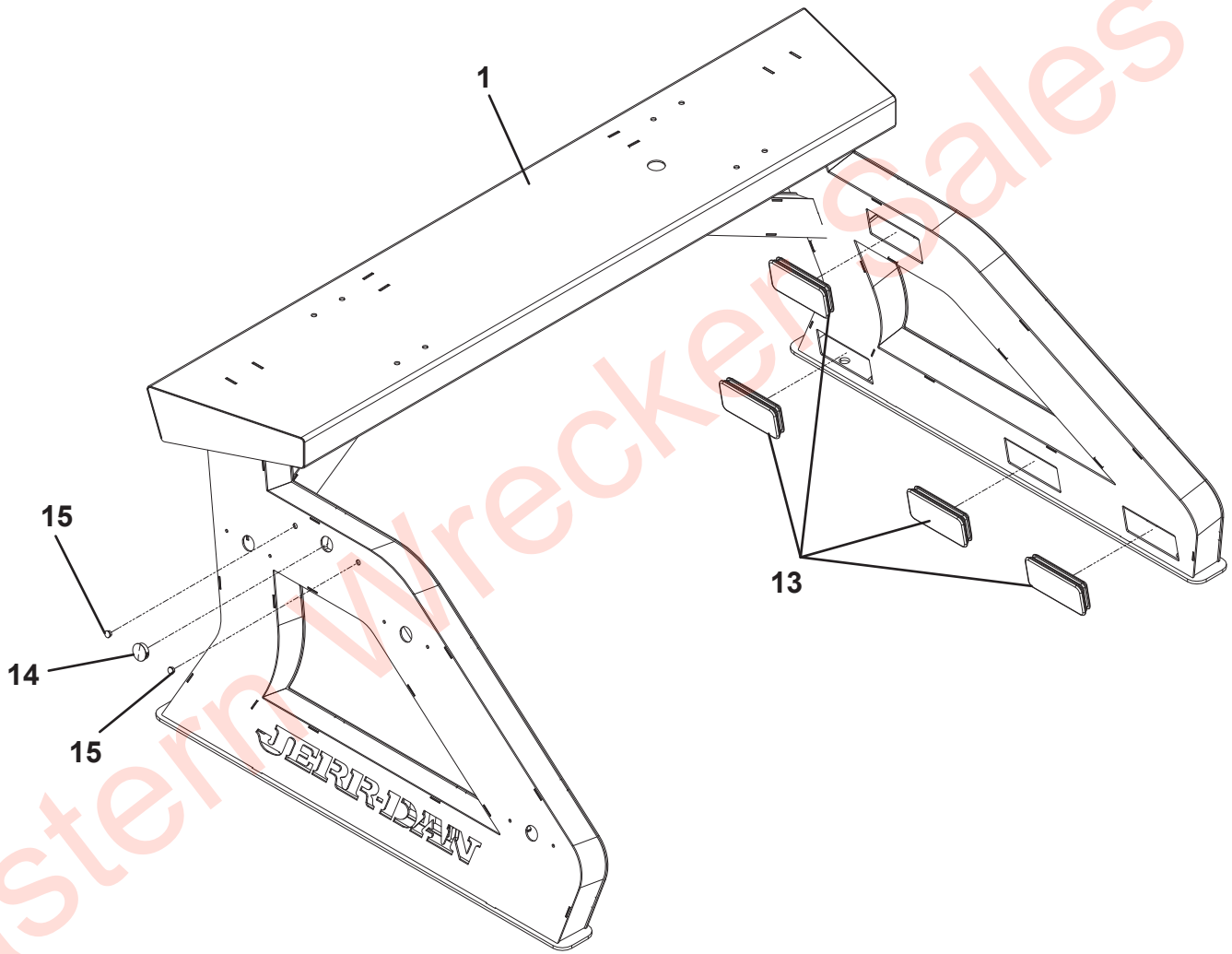

Eastern Wrecker Sales Inc

PYLON LIGHT INSTALLATION - ALL

ITEM	PART NO.	DESCRIPTION	QTY	REV
	1001207488	Pylon Light Installation - ALL	Ref	B
6	1001151546	Nut, #8 - 32NC	12	
7	7114080418	Screw, #8 - 32NC x 0.50”	12	
8	7590000262	Light, Amber	6	

Eastern Wrecker Sales Inc

PYLON LIGHT INSTALLATION - ALL

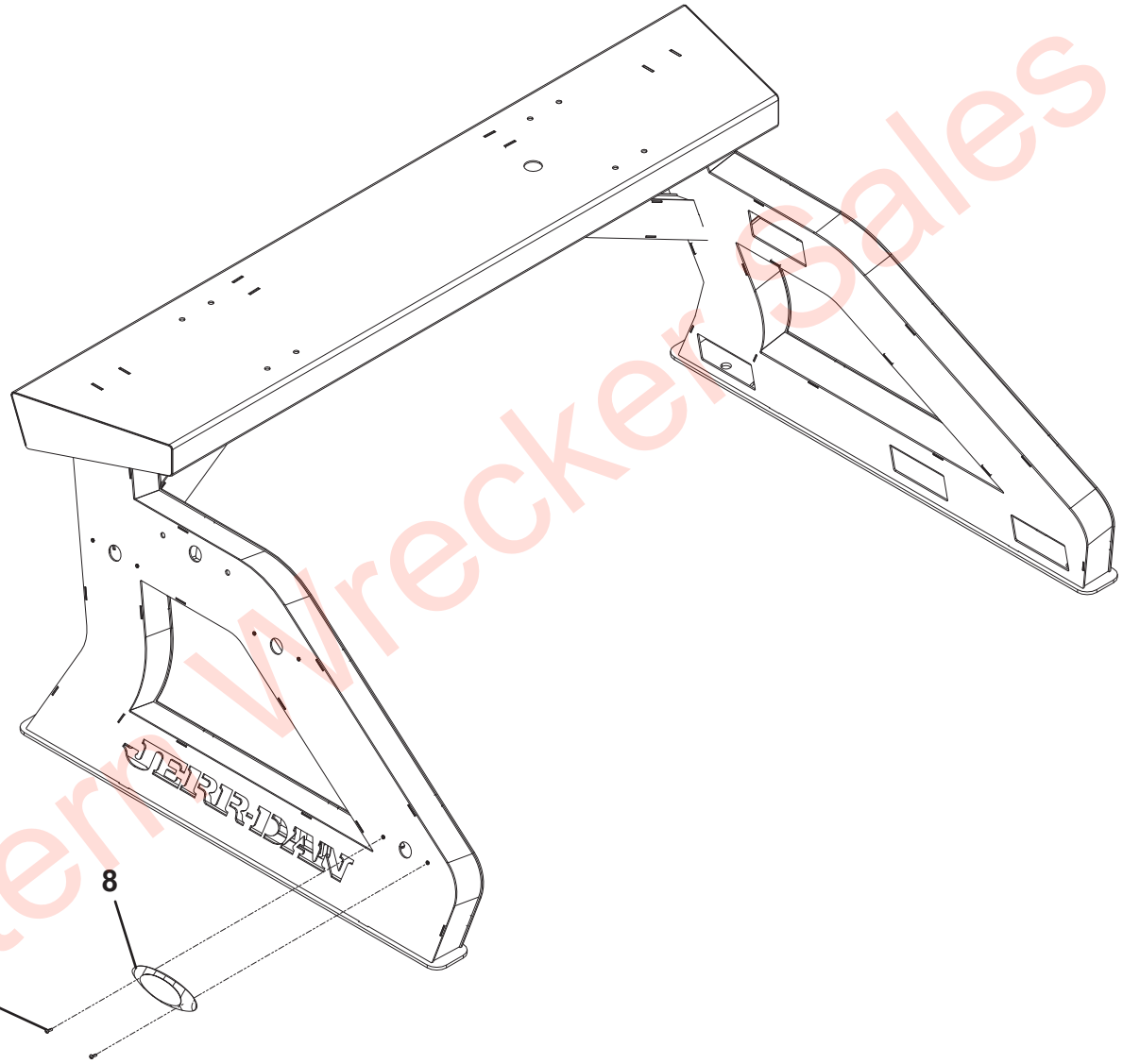

Eastern Wrecker Sales Inc

PYLON HARNESS INSTALLATION - 34” AND 39” PYLON

ITEM	PART NO.	DESCRIPTION	QTY	REV
	1001215020	Pylon Harness Installation - 34” & 39” Pylon	Ref	B
16	1001195257	Screw, 0.25” x 0.50”	3	
17	7280000006	Clip	3	
18	1001189656	Headboard Harness, 34” & 39”	1	
19	1001189657	Headboard Harness, Main 34” & 39”	1	

Eastern Wrecker Sales Inc

PYLON HARNESS INSTALLATION - 34” AND 39” PYLON

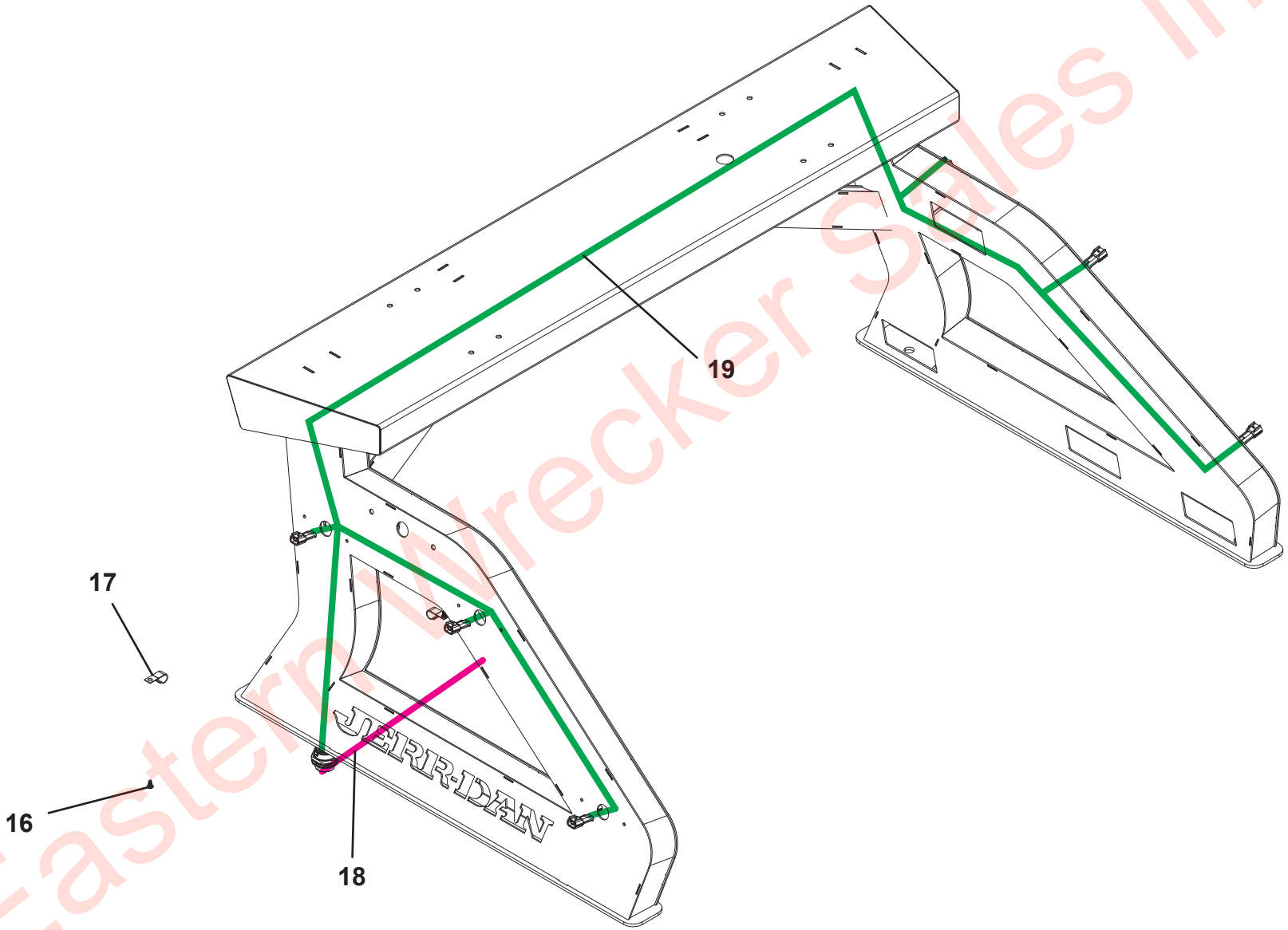

Eastern Wrecker Sales Inc

PYLON HARNESS INSTALLATION - 57” PYLON

ITEM	PART NO.	DESCRIPTION	QTY	REV
	1001215034	Pylon Harness Installation - 57” Pylon	Ref	B
16	1001195257	Screw, 0.25” x 0.50”	3	
17	7280000006	Clip	3	
18	1001214605	Headboard Harness, 57”	1	
19	1001215110	Headboard Harness, Main 57”	1	

Eastern Wrecker Sales Inc

PYLON HARNESS INSTALLATION - 57” PYLON

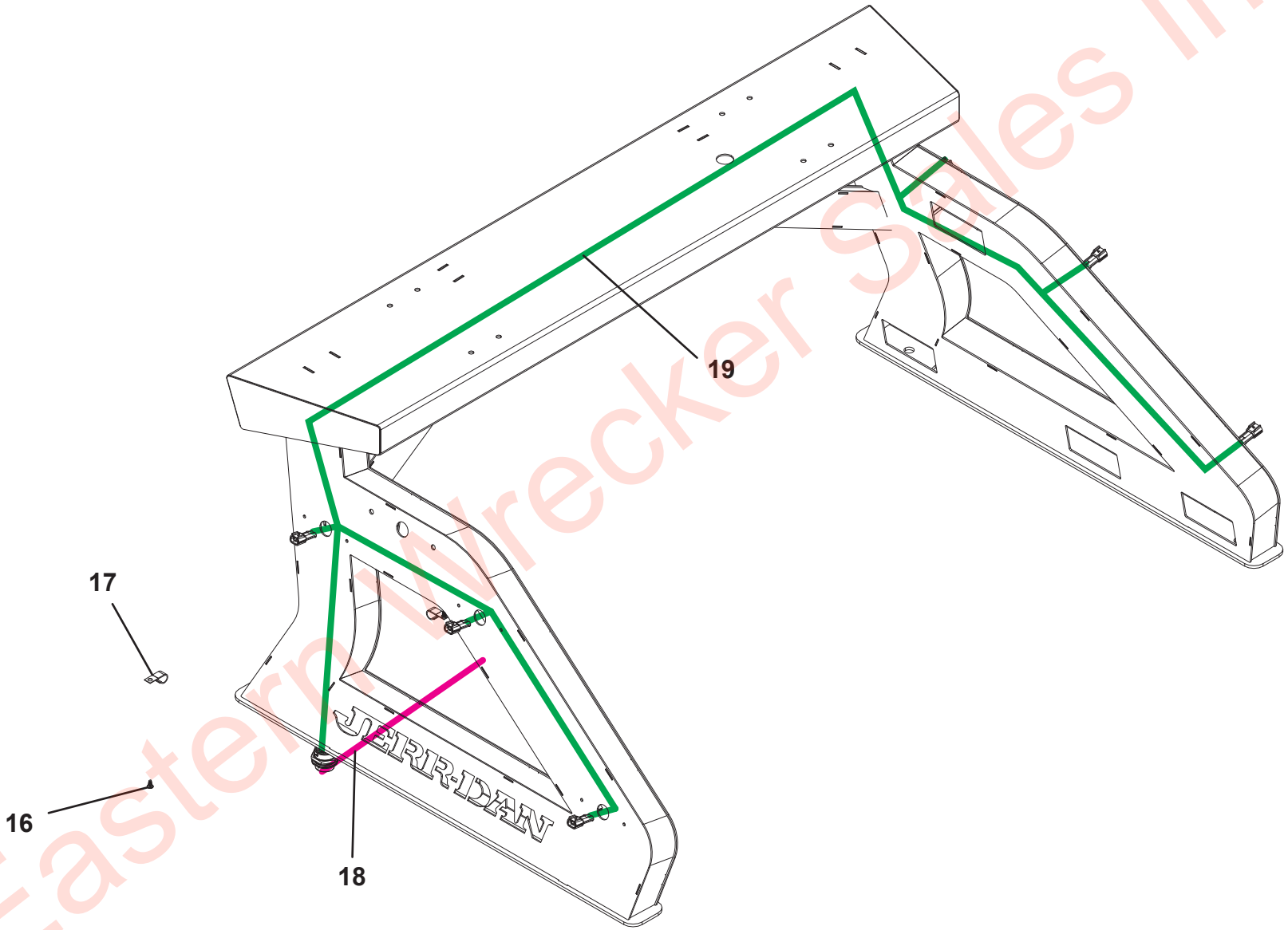

Eastern Wrecker Sales Inc

PYLON COVER INSTALLATION - 34” PYLON

ITEM	PART NO.	DESCRIPTION	QTY	REV
	1001214252	Pylon Cover Installation - 34” Pylon	Ref	B
9	1001213093	Plate, 34”	1	
10	1001143686	Washer, 0.25” ID	12	
11	7114140518	Screw, 0.25” - 20NC x 0.625”	12	
12	7661000019	U-Nut, 0.25” - 20NC	12	

Eastern Wrecker Sales Inc

PYLON COVER INSTALLATION - 34” PYLON

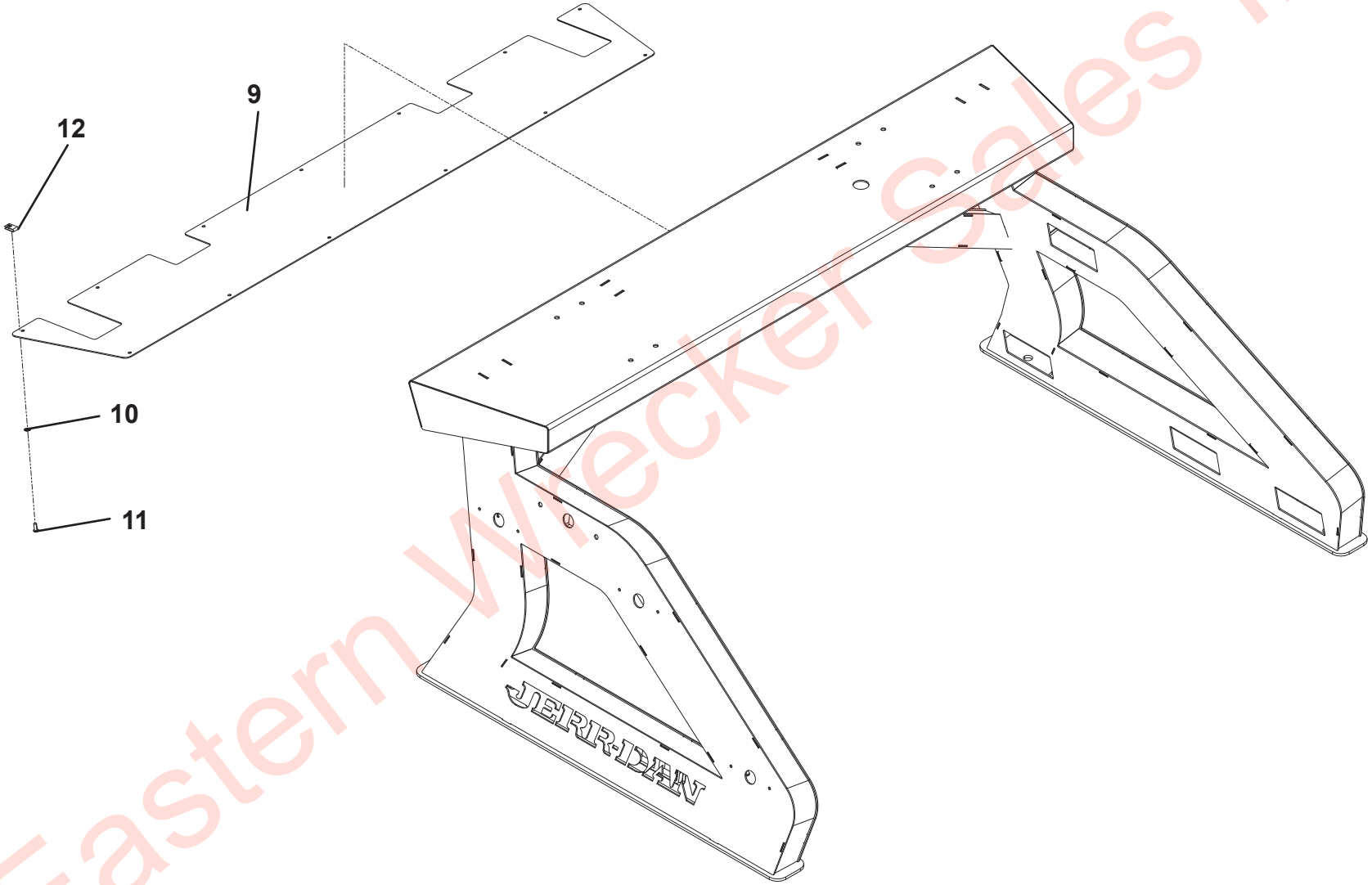

Eastern Wrecker Sales Inc

PYLON COVER INSTALLATION - 39” PYLON

ITEM	PART NO.	DESCRIPTION	QTY	REV
	1001214262	Pylon Cover Installation - 39” Pylon	Ref	B
9	1001213522	Plate, 39”	1	
10	1001143686	Washer, 0.25” ID	12	
11	7114140518	Screw, 0.25” - 20NC x 0.625”	12	
12	7661000019	U-Nut, 0.25” - 20NC	12	

Eastern Wrecker Sales Inc

PYLON COVER INSTALLATION - 39" PYLON

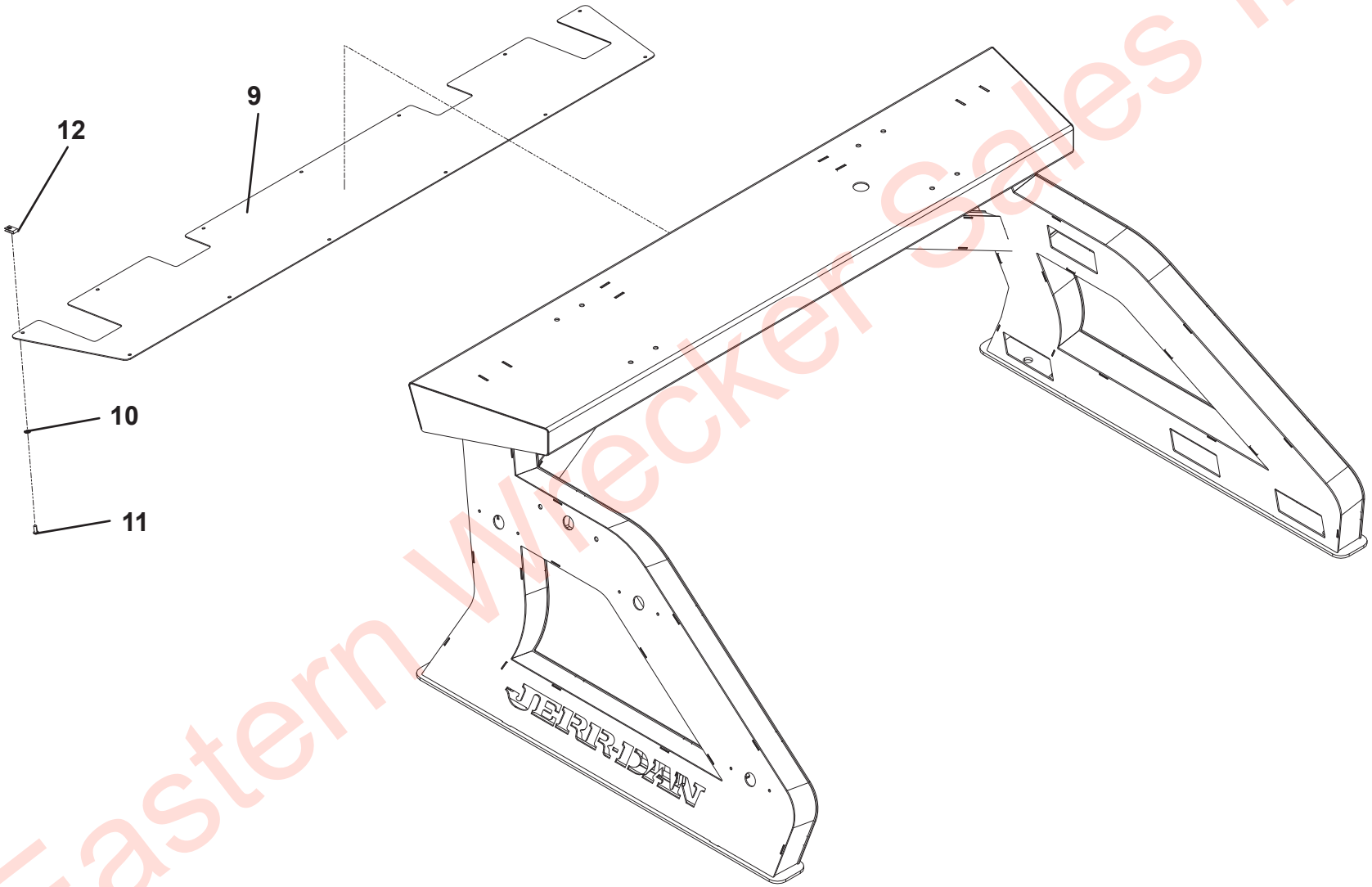

Eastern Wrecker Sales Inc

PYLON COVER INSTALLATION - 57” PYLON

ITEM	PART NO.	DESCRIPTION	QTY	REV
	1001214973	Pylon Cover Installation - 57” Pylon	Ref	B
9	1001214590	Plate, 57”	1	
10	1001143686	Washer, 0.25” ID	12	
11	7114140518	Screw, 0.25” - 20NC x 0.625”	12	
12	7661000019	U-Nut, 0.25” - 20NC	12	

Eastern Wrecker Sales Inc

PYLON COVER INSTALLATION - 57” PYLON

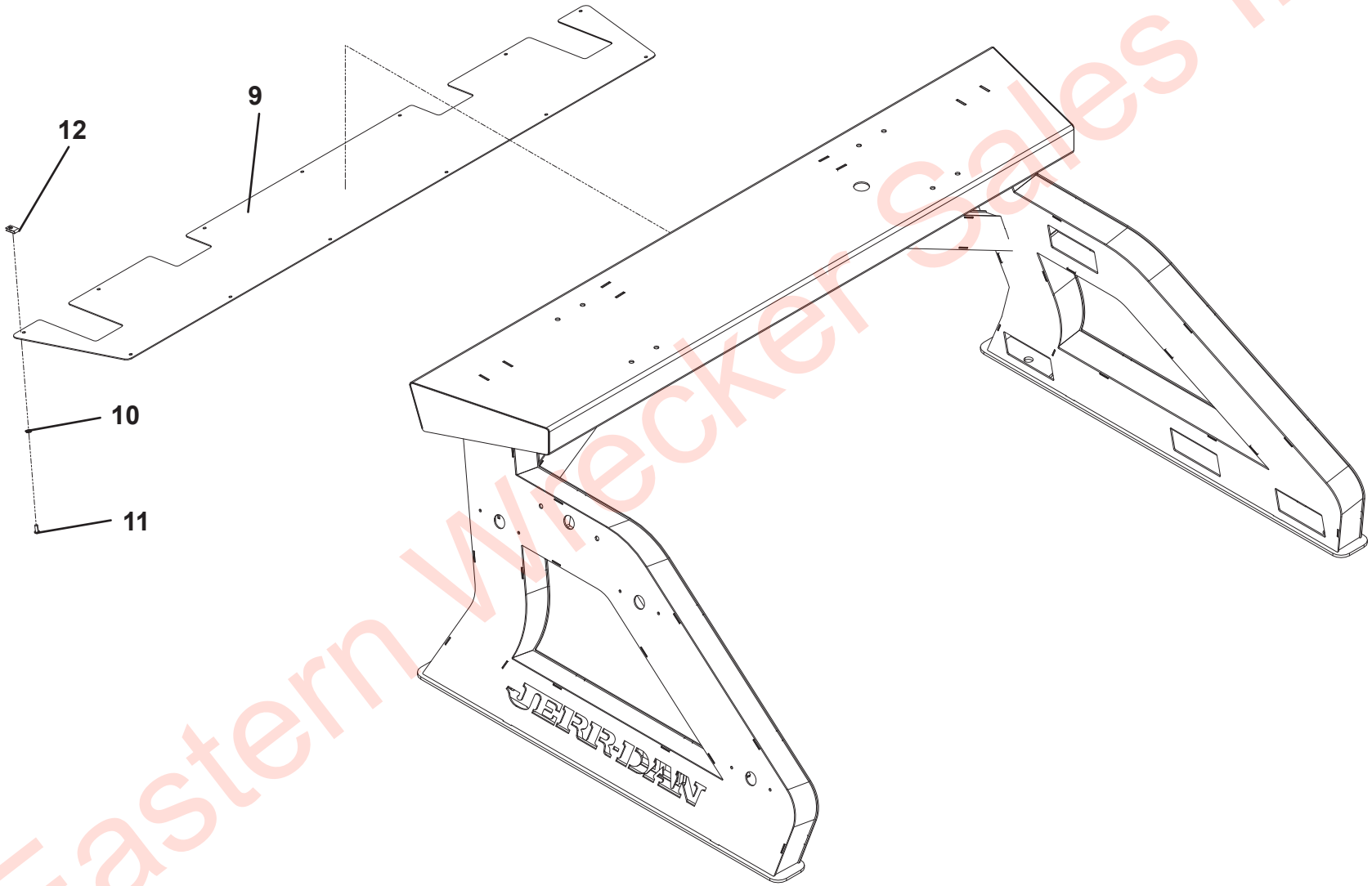

Eastern Wrecker Sales Inc

PYLON ADAPTER INSTALLATION - 39” TUNNEL (34” AND 39” PYLON)

ITEM	PART NO.	DESCRIPTION	QTY	REV
	1001214336	Pylon Adapter Installation - 39” Tunnel (34” & 39” Pylon)	Ref	A
2	0642228	Capscrew, 0.75” - 10NC x 3.50”	4	
3	4752200	Washer, 0.75” ID	4	
4	1001213112	Mount, 24”	2	
5	1001214350	Seal, 24”	2	

Eastern Wrecker Sales Inc

PYLON ADAPTER INSTALLATION - 39” TUNNEL (34” AND 39” PYLON)

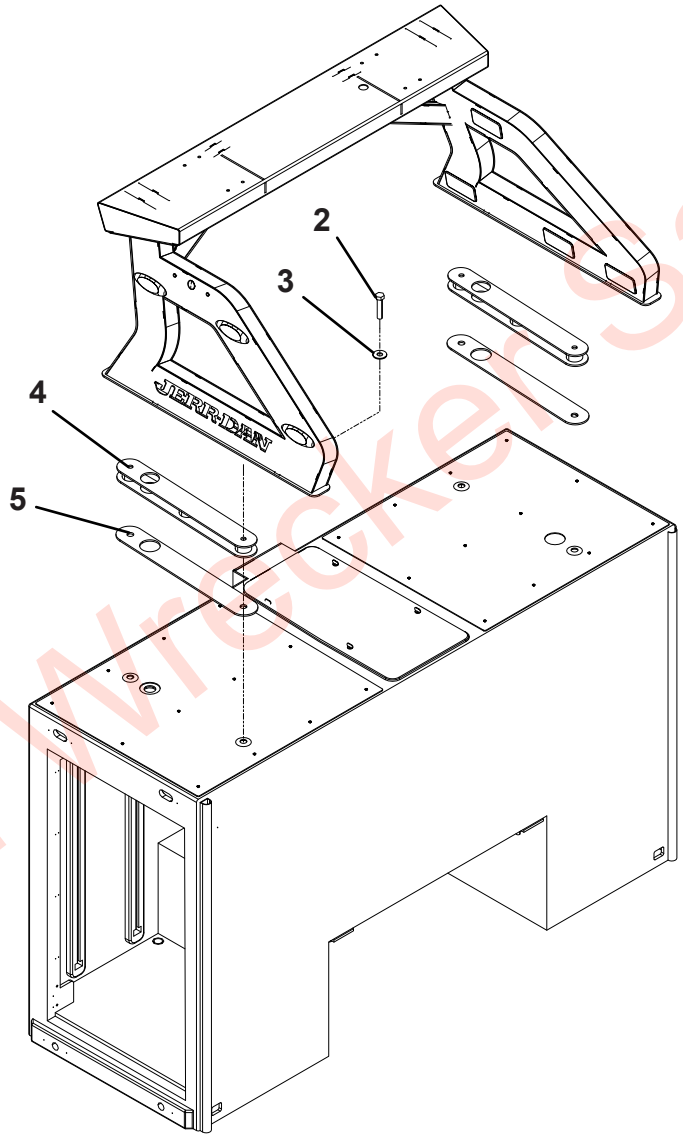

Eastern Wrecker Sales Inc

PYLON ADAPTER INSTALLATION - 51” TUNNEL (57” PYLON)

ITEM	PART NO.	DESCRIPTION	QTY	REV
	1001214335	Pylon Adapter Installation - 51” Tunnel (57” Pylon)	Ref	A
2	0642228	Capscrew, 0.75” - 10NC x 3.50”	4	
3	4752200	Washer, 0.75” ID	4	
4	1001213111	Mount, 36”	2	
5	1001214130	Seal, 36”	2	

Eastern Wrecker Sales Inc

PYLON ADAPTER INSTALLATION - 51” TUNNEL (57” PYLON)

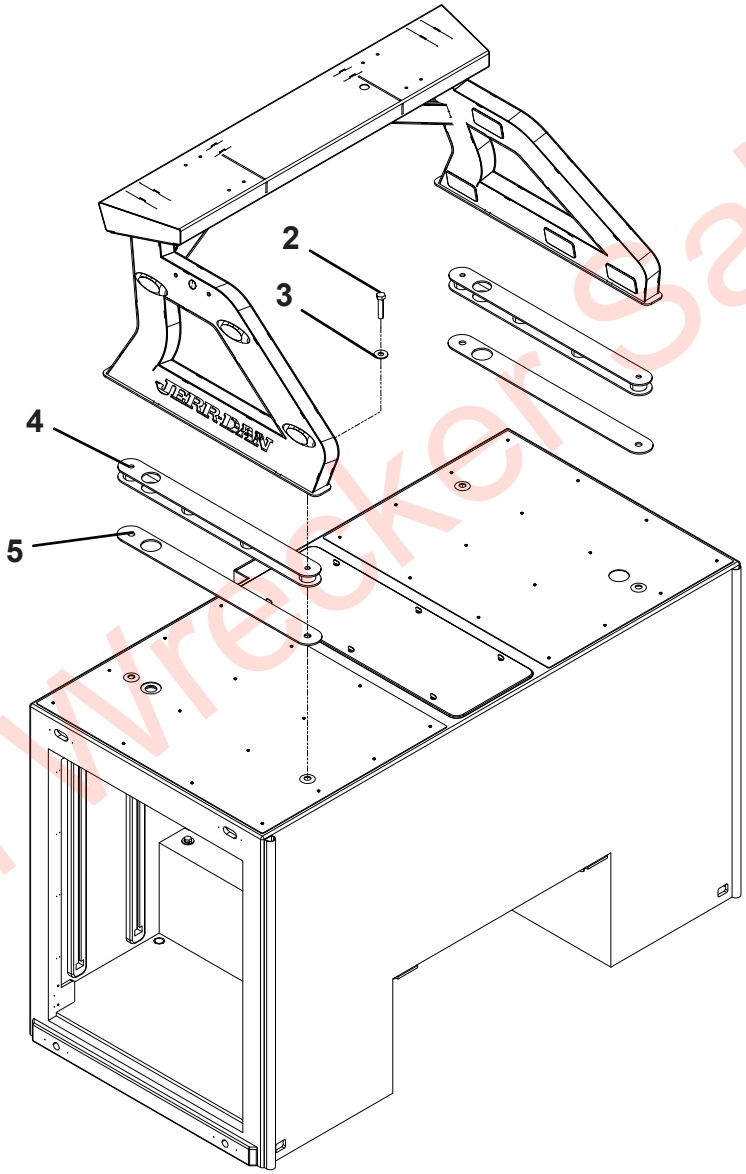

Eastern Wrecker Sales Inc

PYLON DRESS-UP KIT - 34” PYLON

ITEM	PART NO.	DESCRIPTION	QTY	REV
	1001228895	Pylon Dress-Up Kit - 34” Pylon	Ref	A
1	1001156424	Pop Rivet (Not Shown)	42	
2	1001220169	Plate, Front	1	
3	1001220234	Plate, Back	1	
4	1001220345	Plate, Side LH	1	
5	1001220349	Plate, Side RH	1	
6	1001220352	Plate, Top Side LH	1	
7	1001220353	Plate, Top Side RH	1	

Eastern Wrecker Sales Inc

PYLON DRESS-UP KIT - 34” PYLON

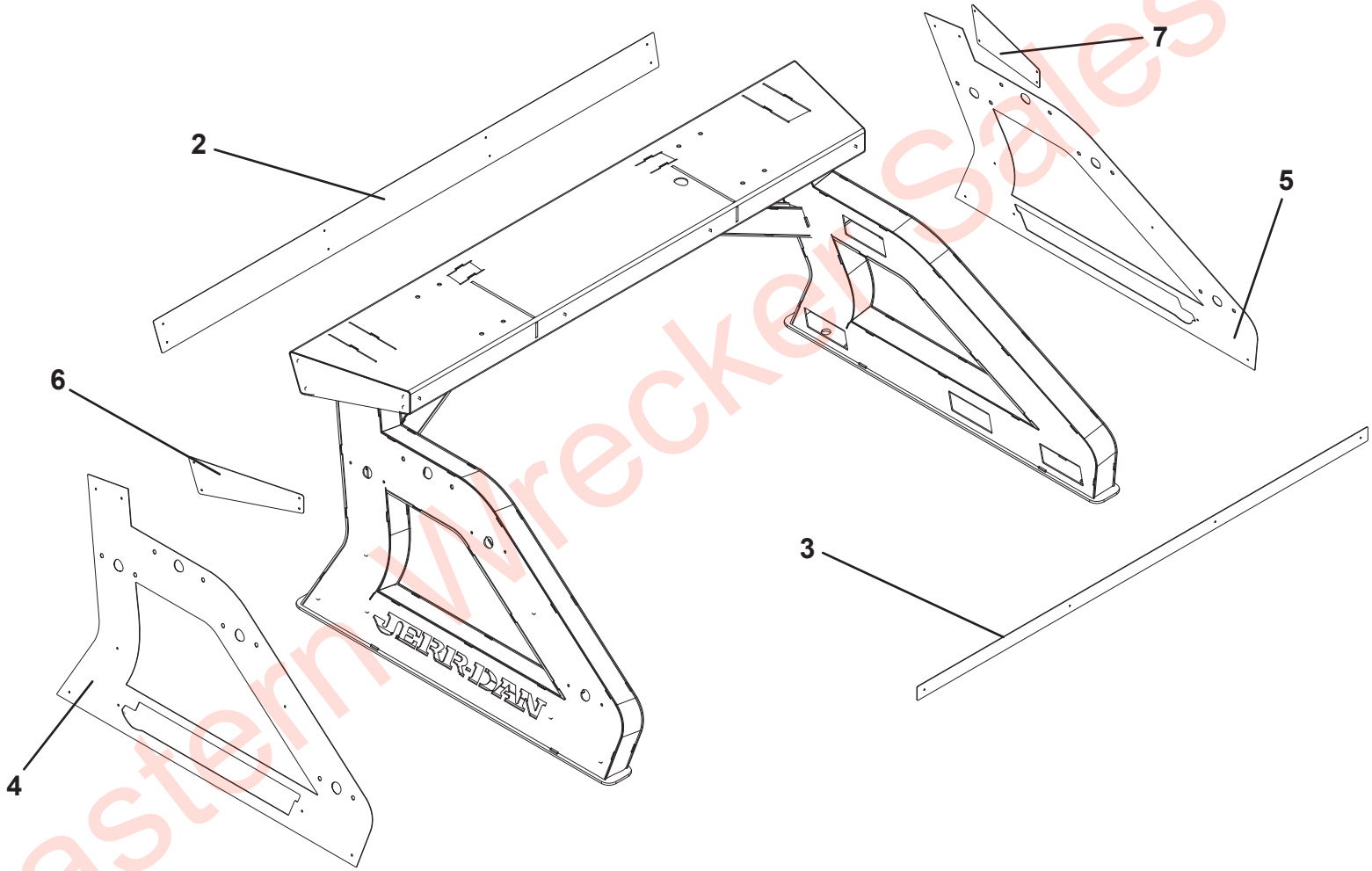

Eastern Wrecker Sales Inc

PYLON DRESS-UP KIT - 39” PYLON

ITEM	PART NO.	DESCRIPTION	QTY	REV
	1001228898	Pylon Dress-Up Kit - 39” Pylon	Ref	A
1	1001156424	Pop Rivet (Not Shown)	44	
2	1001220167	Plate, Side LH	1	
3	1001220168	Plate, Side RH	1	
4	1001220169	Plate, Front	1	
5	1001220170	Plate, Top Side LH	1	
6	1001220171	Plate, Top Side RH	1	
7	1001220234	Plate, Back	1	

Eastern Wrecker Sales Inc

PYLON DRESS-UP KIT - 39” PYLON

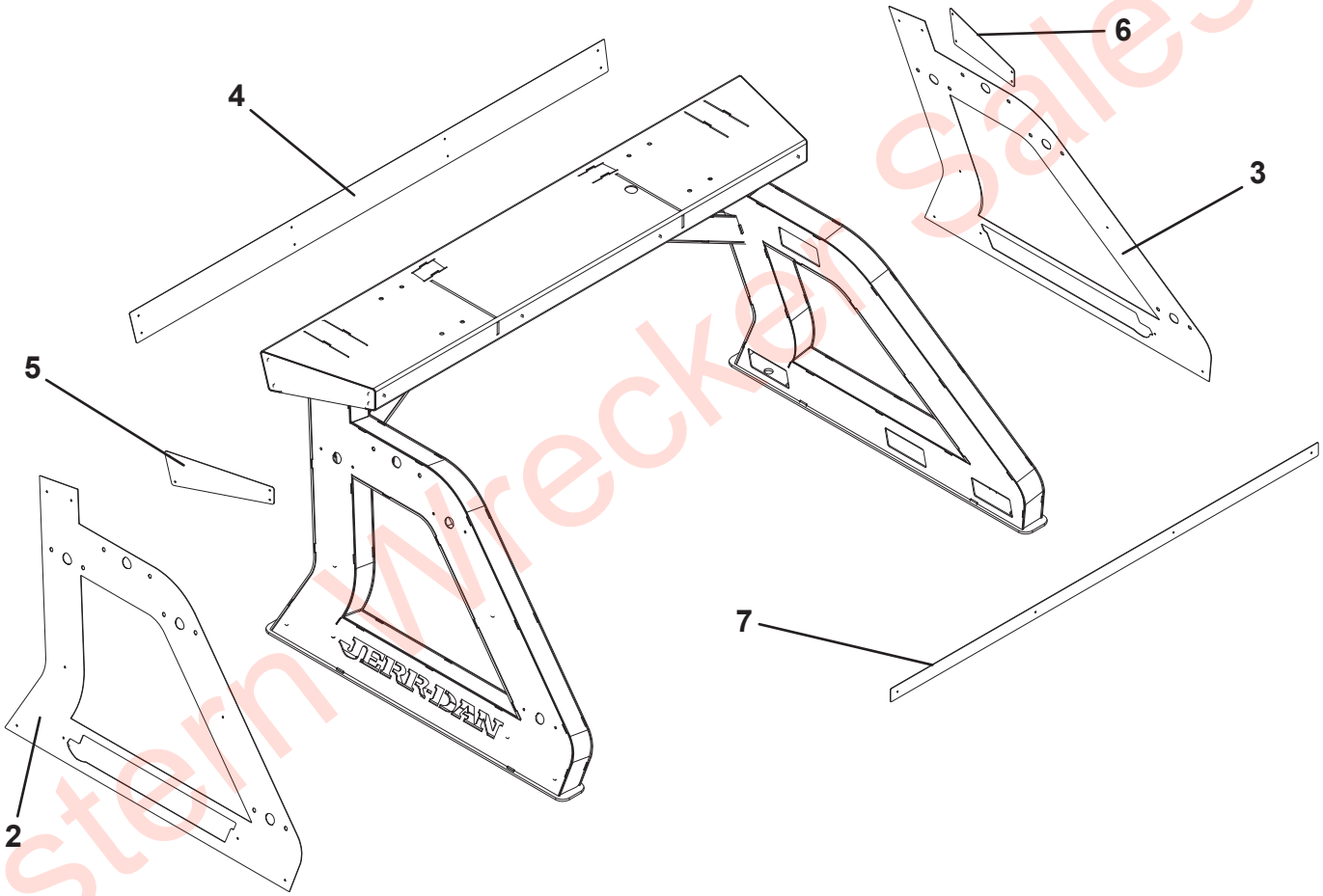

Eastern Wrecker Sales Inc

PYLON DRESS-UP KIT - 57” PYLON

ITEM	PART NO.	DESCRIPTION	QTY	REV
	1001220186	Pylon Dress-Up Kit - 57” Pylon	Ref	B
1	1001156424	Pop Rivet (Not Shown)	52	
2	1001220169	Plate, Front	1	
3	1001220234	Plate, Back	1	
4	1001220350	Plate, Side LH	1	
5	1001220351	Plate, Side RH	1	
6	1001220354	Plate, Top Side LH	1	
7	1001220355	Plate, Top Side RH	1	

Eastern Wrecker Sales Inc

PYLON DRESS-UP KIT - 57” PYLON

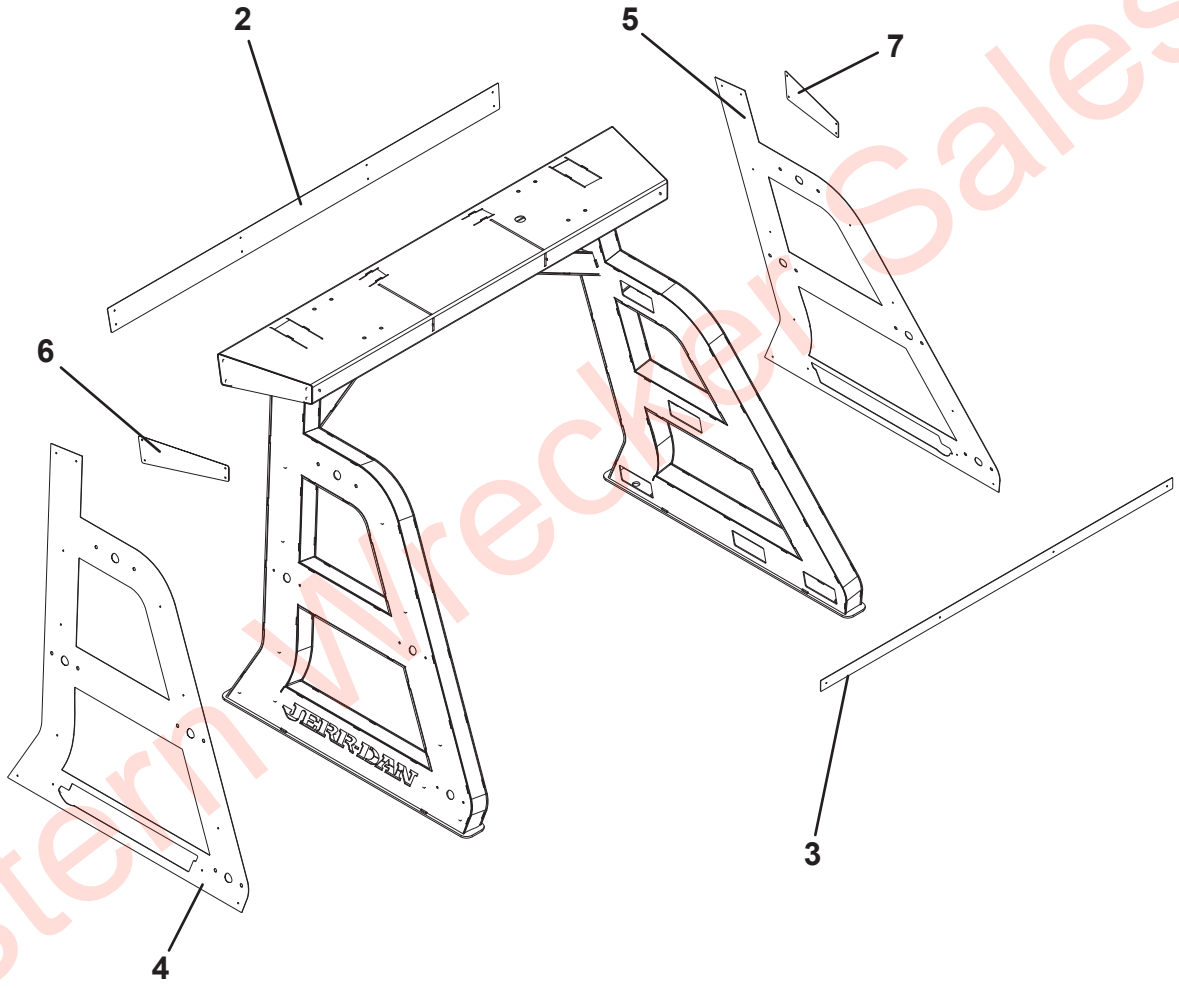

Eastern Wrecker Sales Inc

PYLON DRESS-UP KIT - 34” PYLON - POLISHED

ITEM	PART NO.	DESCRIPTION	QTY	REV
	1001228897	Pylon Dress-Up Kit - 34” Pylon - Polished	Ref	A
1	1001156424	Pop Rivet (Not Shown)	42	
2	1001220363	Plate, Front	1	
3	1001220364	Plate, Back	1	
4	1001220369	Plate, Side LH	1	
5	1001220370	Plate, Side RH	1	
6	1001220371	Plate, Top Side LH	1	
7	1001220372	Plate, Top Side RH	1	

Eastern Wrecker Sales Inc

PYLON DRESS-UP KIT - 34” PYLON - POLISHED

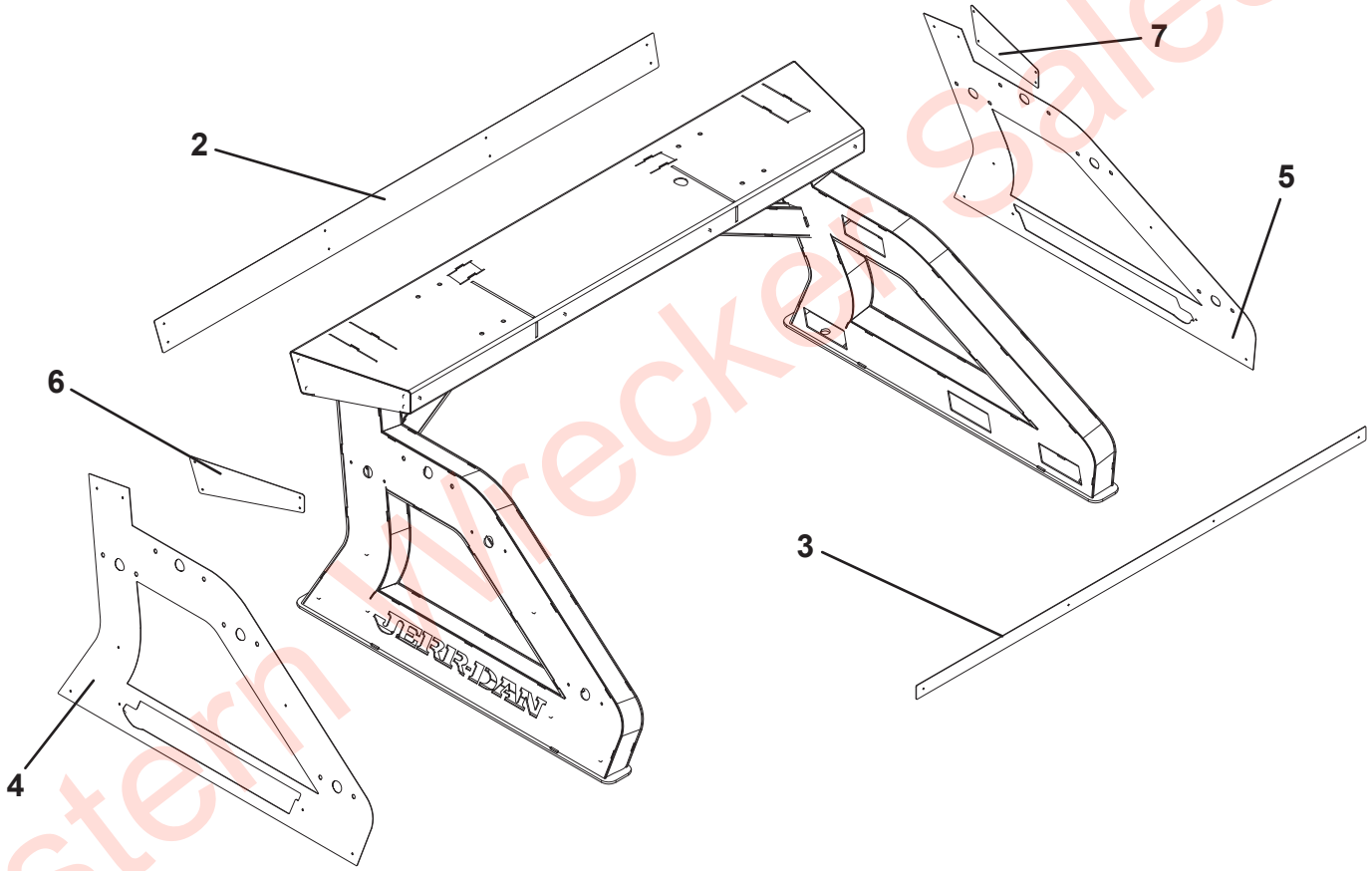

Eastern Wrecker Sales Inc

PYLON DRESS-UP KIT - 39” PYLON - POLISHED

ITEM	PART NO.	DESCRIPTION	QTY	REV
	1001228899	Pylon Dress-Up Kit - 39” Pylon - Polished	Ref	A
1	1001156424	Pop Rivet (Not Shown)	44	
2	1001220365	Plate, Side LH	1	
3	1001220366	Plate, Side RH	1	
4	1001220369	Plate, Front	1	
5	1001220370	Plate, Top Side LH	1	
6	1001220373	Plate, Top Side RH	1	
7	1001220374	Plate, Back	1	

Eastern Wrecker Sales Inc

PYLON DRESS-UP KIT - 39” PYLON - POLISHED

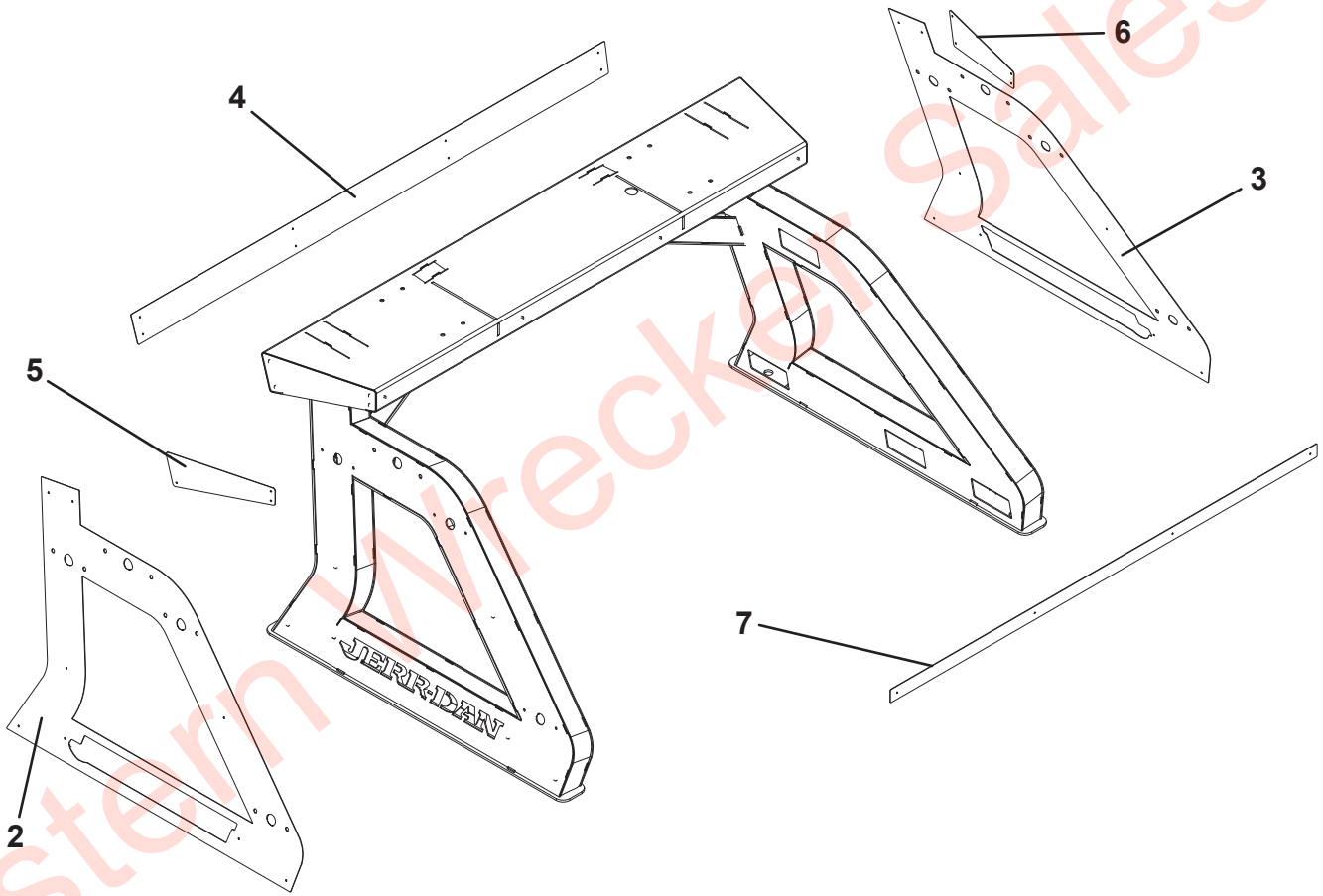

Eastern Wrecker Sales Inc

PYLON DRESS-UP KIT - 57” PYLON - POLISHED

ITEM	PART NO.	DESCRIPTION	QTY	REV
	1001220348	Pylon Dress-Up Kit - 57” Pylon - Polished	Ref	B
1	1001156424	Pop Rivet (Not Shown)	52	
2	1001220367	Plate, Front	1	
3	1001220368	Plate, Back	1	
4	1001220369	Plate, Side LH	1	
5	1001220370	Plate, Side RH	1	
6	1001220375	Plate, Top Side LH	1	
7	1001220376	Plate, Top Side RH	1	

Eastern Wrecker Sales Inc

PYLON DRESS-UP KIT - 57” PYLON - POLISHED

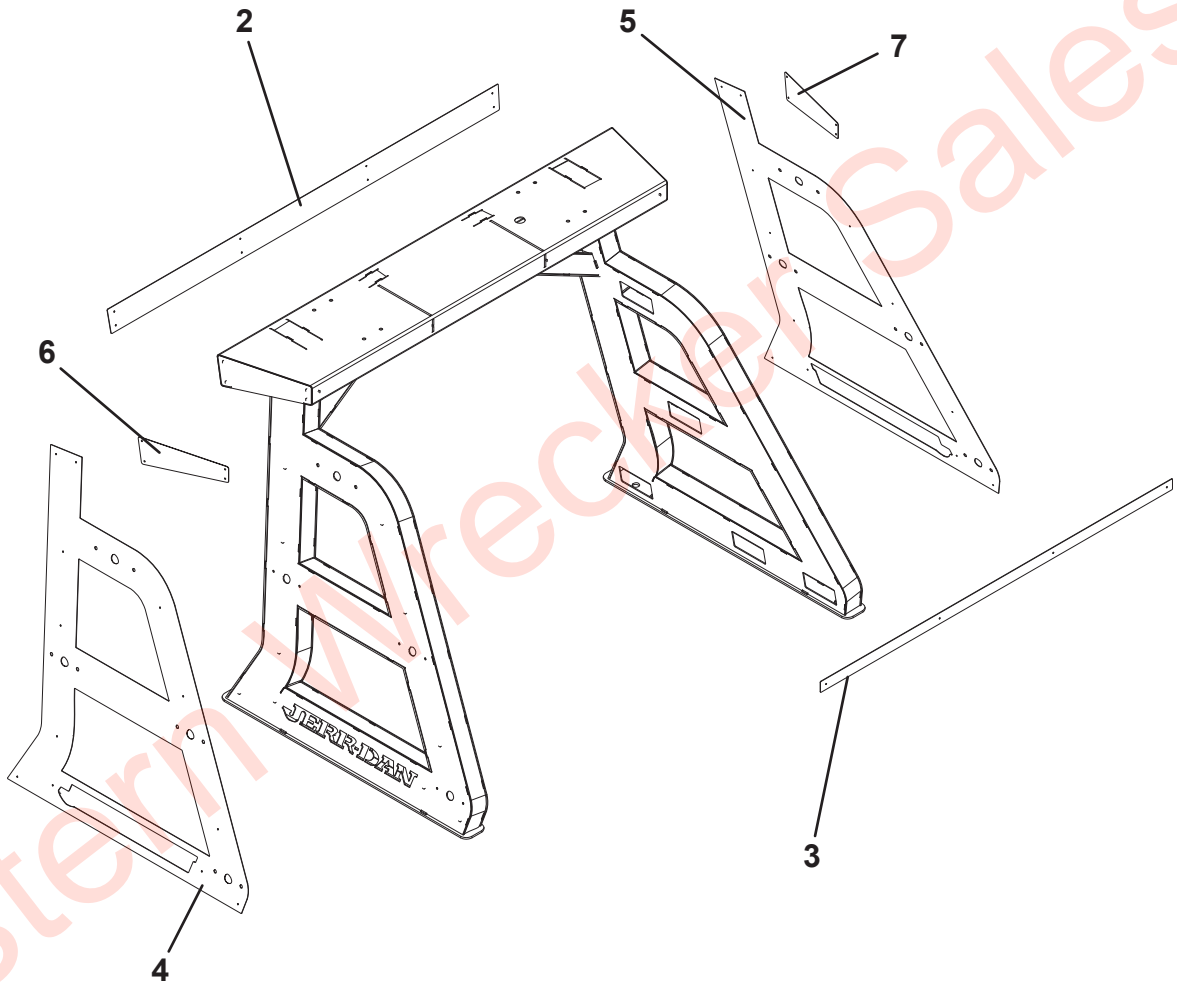

Eastern Wrecker Sales Inc

THIS PAGE INTENTIONALLY LEFT BLANK

Eastern Wrecker Sales Inc

SECTION 4 - CONTROL

Eastern Wrecker Sales Inc

CONTROL INSTALLATION - 9 SECTION - 3 SOLENOID (PRIOR TO S/N 0230004251)

ITEM	PART NO.	DESCRIPTION	QTY	REV
	1001219699	Control Installation - 9 Section - 3 Solenoid	Ref	B
1	641632	Capscrew, 0.38”-16 X 4.00”	4	
2	1001130491	Control Knob Ball	18	
3	1001134433	Decal	1	
4	1001154277	Decal	1	
5	1001166974	Washer	25	
6	1001166978	Washer	13	
7	1001168993	Capscrew, 0.38”-16 X 1.50”	22	
8	1001169080	Capscrew, 0.38”-16 X 1.25”	3	
9	1001169083	Capscrew, 0.38”-16 X 2.00”	4	
10	1001184827	Handle - Long	2	
11	1001184828	Handle - Short	7	
12	1001189779	Panel, Controls Rear - LH	1	
13	1001189780	Panel, Controls Rear - RH	1	
14	1001189781	Panel, Controls Front - LH	1	
15	1001189782	Panel, Controls Rear - RH	1	
16	1001189783	Panel, Controls Top - LH	1	
17	1001189784	Panel, Controls Top - RH	1	
18	1001202499	Panel, Controls 9 Sect - LH	1	
19	1001202508	Panel, Controls 9 Sect - RH	1	
20	1001189993	Panel	1	
21	1001189994	Bulkhead	1	
22	1001202432	Valve Sub Assembly (See Separate Breakdown in this Section)	1	
23	1001194676	Screw, 0.25” X 0.75”	19	
24	1001194682	Bracket	1	
25	1001194736	Tube	2	
26	1001196907	Decal	1	
27	1001196908	Decal	1	
28	1001196909	Decal	1	
29	1001196910	Decal	1	
30	1001196911	Decal	2	
31	4309000001	Coupling	3	
32	4309000007	Coupling	6	
33	7082000005	Bearing	2	
34	7114140618	Screw, 0.25”-20 X 0.75”	11	
35	7413000002	Nutsert, 0.25”-20	21	
36	7660140230	Nut, 0.25"-28	18	
37	7660162601	Locknut, 0.38"-16NC	33	
38	7690141200	Pin	18	
39	7691000075	Pin	18	
40	7754000009	Retaining Ring	2	
41	7806000008	Shaft	1	
42	7950140003	Lockwasher, 0.25" ID	11	
43	7950140143	Flatwasher, 0.25” ID	40	
44	7950160143	Flatwasher, 0.38" ID	66	
45	7990000003	Yoke	9	
46	7248000053	Cable, Push-Pull	9	
47	7796000012	Seal	3.5FT	
48	3520064	Plug	2	
49	1001201079	Plug	2	

Eastern Wrecker Sales Inc

CONTROL INSTALLATION - 9 SECTION - 3 SOLENOID (PRIOR TO S/N 0230004251)

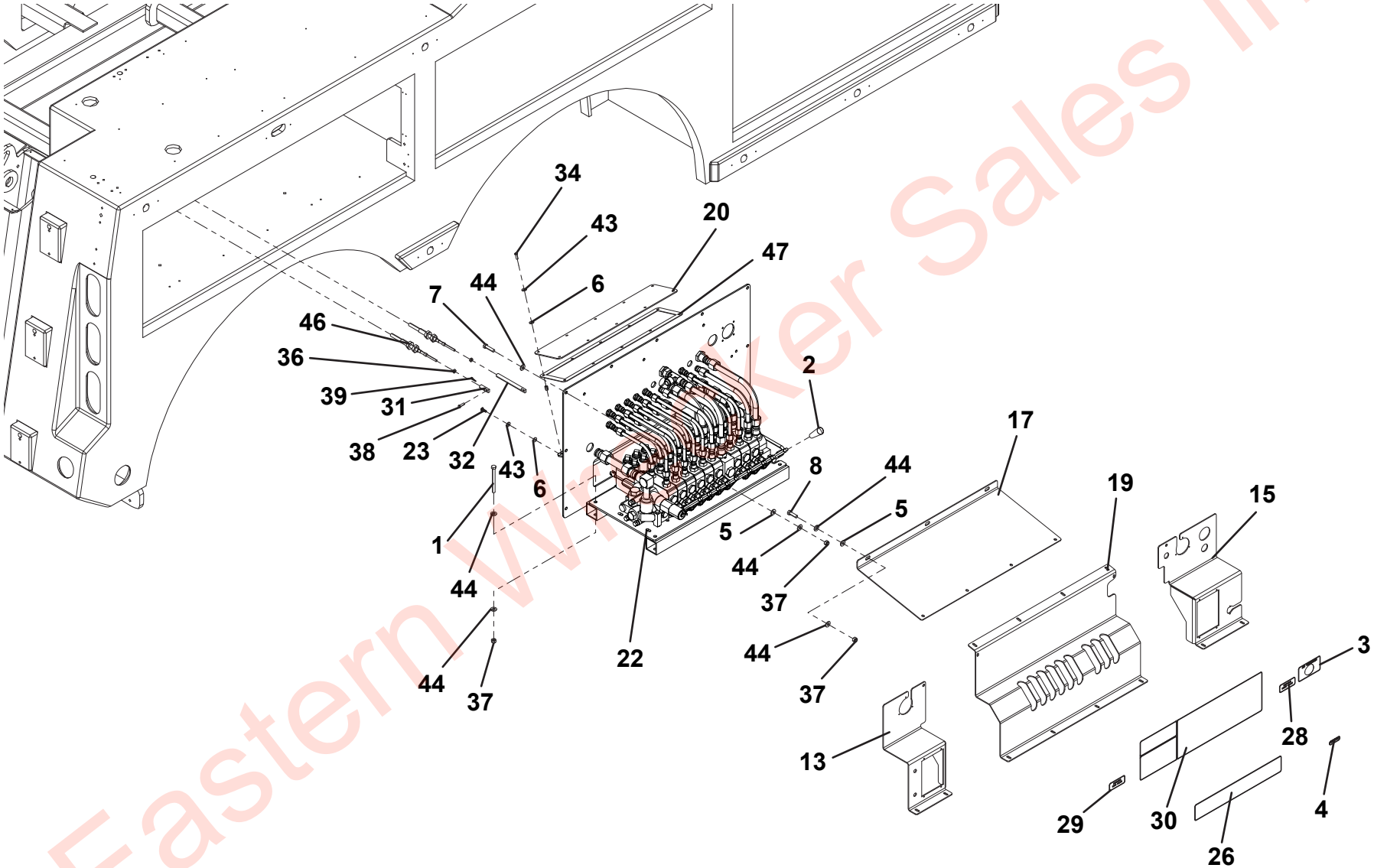

Eastern Wrecker Sales Inc

CONTROL INSTALLATION - 9 SECTION - 3 SOLENOID (PRIOR TO S/N 0230004251)

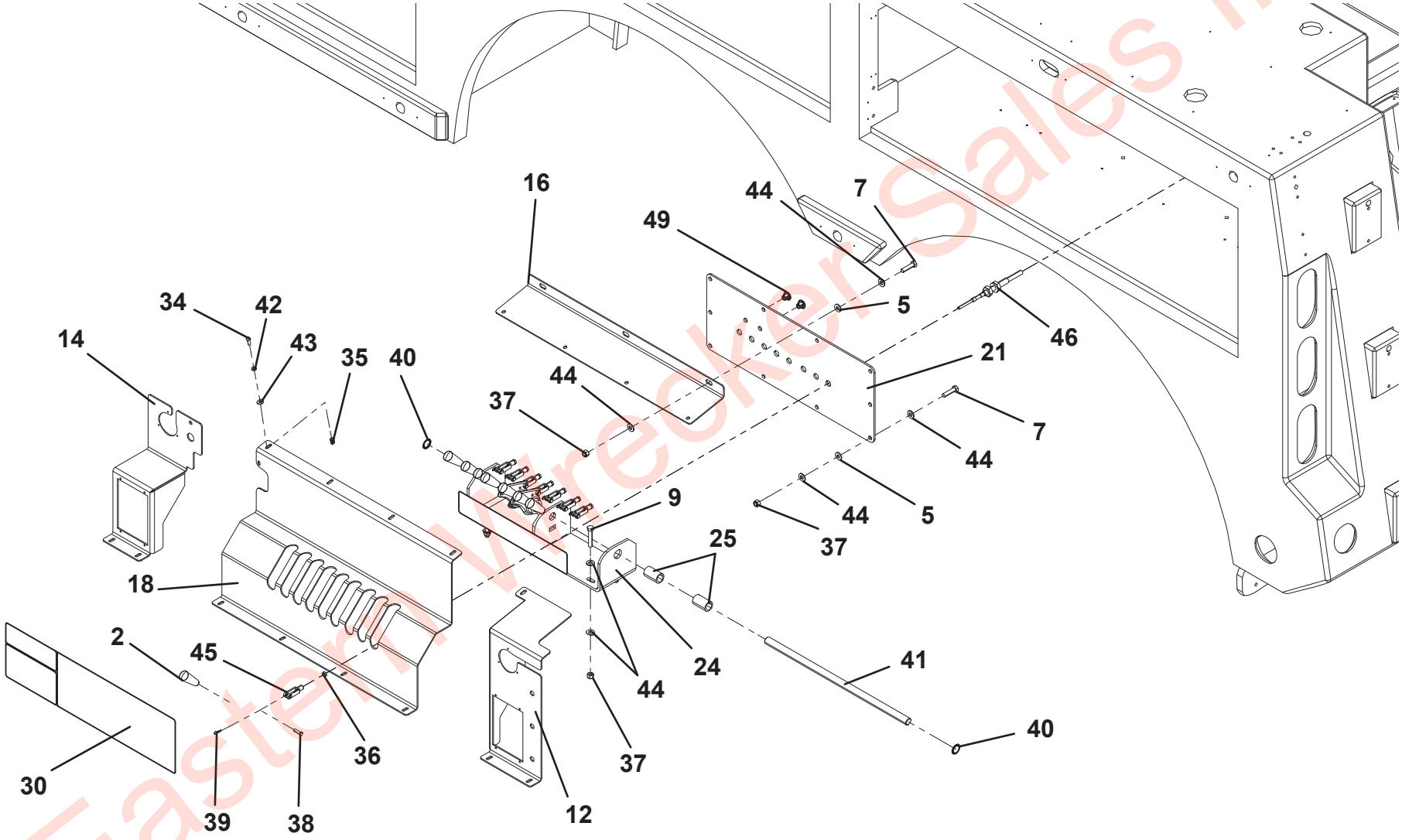

Eastern Wrecker Sales Inc

THIS PAGE INTENTIONALLY LEFT BLANK

Eastern Wrecker Sales Inc

CONTROL INSTALLATION - 9 SECTION - 3 SOLENOID (S/N 0230004251 TO PRESENT)

ITEM	PART NO.	DESCRIPTION	QTY	REV
	1001207715	Control Installation - 9 Section - 3 Solenoid	Ref	B
1	641632	Capscrew, 0.38”-16 X 4.00”	4	
2	3520064	Plug	2	
3	1001130491	Control Knob	18	
4	1001134433	Decal	1	
5	1001154277	Decal	1	
6	1001166974	Washer, 0.38”	21	
7	1001166978	Washer, 0.25”	3	
8	1001168993	Capscrew, 0.38”-16 X 1.50”	18	
9	1001169080	Capscrew, 0.38”-16 X 1.25”	3	
10	1001184827	Handle, Long	2	
11	1001184828	Handle, Short	7	
12	1001189784	Panel, Controls Top RH	1	
13	1001202508	Panel, Controls 9 Sect RH	1	
14	1001189993	Panel, Cable Bracket Cover	1	
15	1001202432	Valve Sub Assembly (See Separate Breakdown in this Section)	1	
16	1001194676	Screw, 0.25” X 0.75”	19	
17	1001194736	Spacer	1	
18	1001202517	Decal	1	
19	1001202518	Decal	1	
20	1001196909	Decal	1	
21	1001196910	Decal	1	
22	1001196911	Decal	2	
23	1001199311	Panel, Controls Front LH	1	
24	1001199322	Panel, Controls Rear RH	1	
25	1001199324	Panel, Controls Front RH	1	
26	1001214902	Panel, Controls Top LH	1	
27	1001219743	Panel, Controls 9 Sect LH	1	
28	1001219691	Panel, Controls Rear LH	1	
29	1001219937	Plate	1	
30	1001220068	Bracket	1	
31	4309000001	Coupling	3	
32	4309000007	Coupling	6	
33	7082000005	Bearing	2	
34	7114140618	Screw, 0.25”-20 X 0.75”	22	
35	7114141018	Screw, 0.25"-20 X 1.25"	10	
36	7413000002	Nutsert, 0.25”-20	22	
37	7660140230	Nut, 0.25"-28	18	
38	7660142601	Locknut, 0.25" -20NC	10	
39	7660162601	Locknut, 0.38"-16NC	29	
40	7690141200	Pin	18	
41	7691000075	Pin	18	
42	7754000009	Retaining Ring	2	
43	7806000008	Shaft	1	
44	7950140003	Lockwasher, 0.25" ID	22	
45	7950140143	Flatwasher, 0.25” ID	61	
46	7950160143	Flatwasher, 0.38" ID	58	
47	7990000003	Yoke	9	
48	1001202741	Cable Push Pull	5	
49	7796000012	Seal	8.7 FT	
50	1001169083	Capscrew, 0.38”-16 X 2.00”	4	
51	1001206801	Cable Push Pull	4	

Eastern Wrecker Sales Inc

CONTROL INSTALLATION - 9 SECTION - 3 SOLENOID (S/N 0230004251 TO PRESENT)

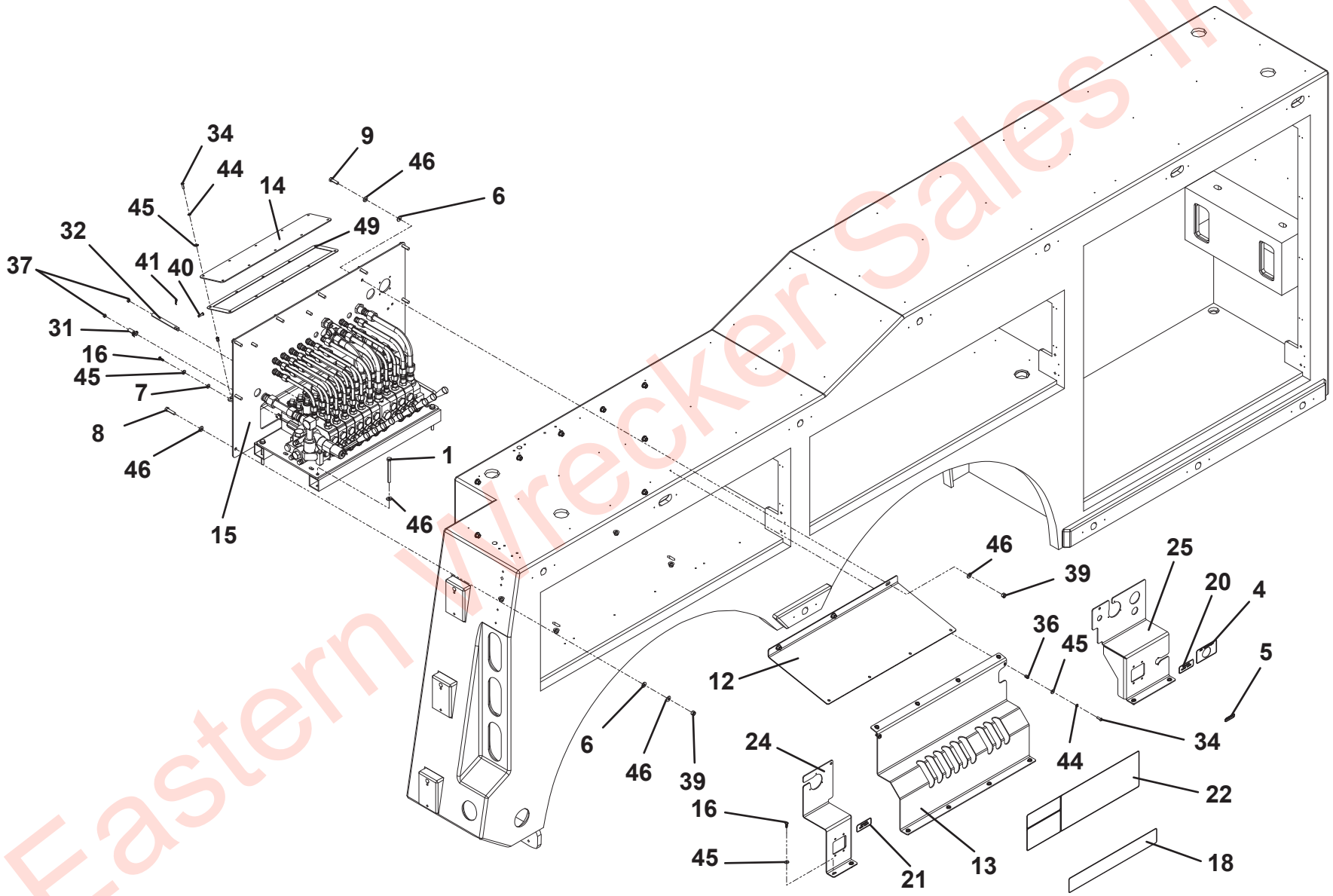

Eastern Wrecker Sales Inc

CONTROL INSTALLATION - 9 SECTION - 3 SOLENOID (S/N 0230004251 TO PRESENT)

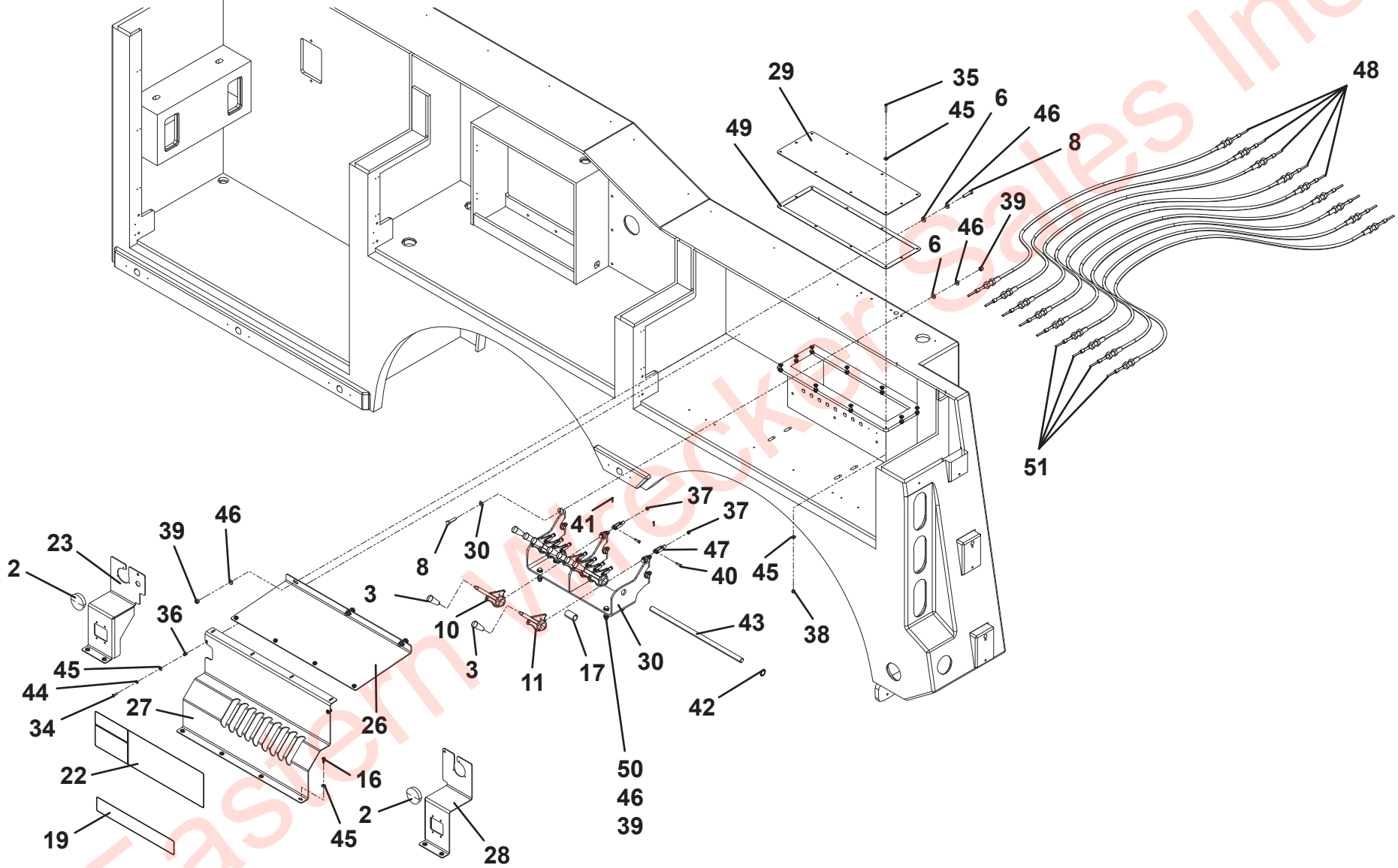

Eastern Wrecker Sales Inc

THIS PAGE INTENTIONALLY LEFT BLANK

Eastern Wrecker Sales Inc

CONTROL VALVE ASSEMBLY - 1001202432

ITEM	PART NO.	DESCRIPTION	QTY	REV
	1001202432	Control Valve Assembly	Ref	B
1	0641524	Capscrew, 5/16” - 18 x 3”	3	
2	2220374	Adapter	14	
3	2220376	Adapter	1	
4	2220451	Adapter	2	
5	2220473	Adapter	1	
6	2220700	Adapter	1	
7	2220947	Adapter	4	
8	2230024	Adapter	1	
9	2230025	Adapter	14	
10	2230027	Fitting	2	
11	2230089	Fitting	3	
12	4751500	Washer, 5/16” ID	3	
13	8760037	Union	4	
14	1001184772	Handle, Long	2	
15	1001184773	Handle, Short	7	
16	1001189989	Panel	1	
17	1001194069	Linkage	9	
18	3177000060	Mount	1	
19	7443000211	Fitting	2	
20	7660162601	Locknut, 0.38” - 16NC	3	
21	7935000313	Valve, 9 Sec. 3 Sol (See Separate Breakdown in this Section)	1	
22	7912000301*	Tube Assembly	1	
23	7912000302*	Tube Assembly	1	
24	7912000303*	Tube Assembly	1	
25	7912000304*	Tube Assembly	1	
26	7912000305*	Tube Assembly	1	
27	7912000306*	Tube Assembly	2	
28	7912000307*	Tube Assembly	2	
29	7912000308*	Tube Assembly	6	
30	7912000309*	Tube Assembly	6	
31	7912000310*	Tube Assembly	1	

* Also Available In Tube Kit - 7577000668

Eastern Wrecker Sales Inc

CONTROL VALVE ASSEMBLY - 1001202432

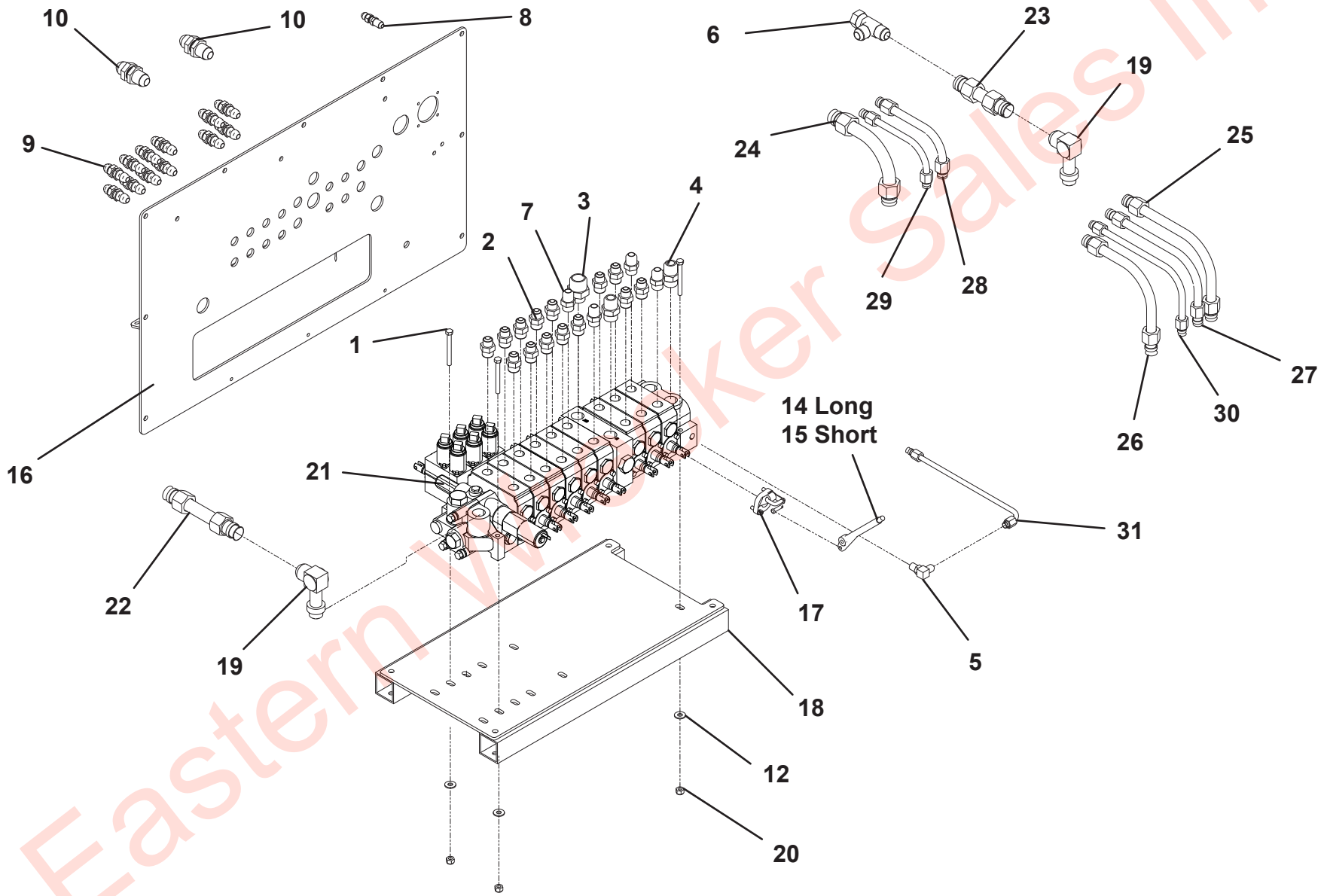

Eastern Wrecker Sales Inc

VALVE ASSEMBLY - 7935000313

ITEM	PART NO.	DESCRIPTION	QTY	REV
	7935000313	Valve Assembly	Ref	A
1	7935000315	Inlet Cover	1	
2	9935930122	Valve Section	2	
3	9935930119	Valve Section	3	
4	7935000320	Valve Section	4	
5	7935000316	Inlet	1	
6	7935000323	Utility Section	1	
7	7935000317	Outlet Cover	1	
8	91084009	Relief	2	
9	70050243	Plug	4	
10	7006847	Plug	14	
11	70050245	Plug	1	
12	70050246	Plug	2	
13	70050247	Plug	1	
14	91084017	Plug	3	
15	70050249	Plug	1	
16	70050241	Pressure Cartridge	1	
17	70050242	Solenoid	1	
18	70050250	Seal	15	
19	70050251	O-Ring	44	
20	70050252	O-Ring	6	
21	70051081	Seal Kit	2	
22	7029865	Seal Kit	18	
23	70051080	Seal Kit	1	
24	70050256	Seal Kit	1	
25	9346930086	Solenoid	6	
26	70051079	Seal	1	
27	70050239	Stud Assembly	1	
28	70050257	Wiper	18	

Eastern Wrecker Sales Inc

VALVE ASSEMBLY - 7935000313

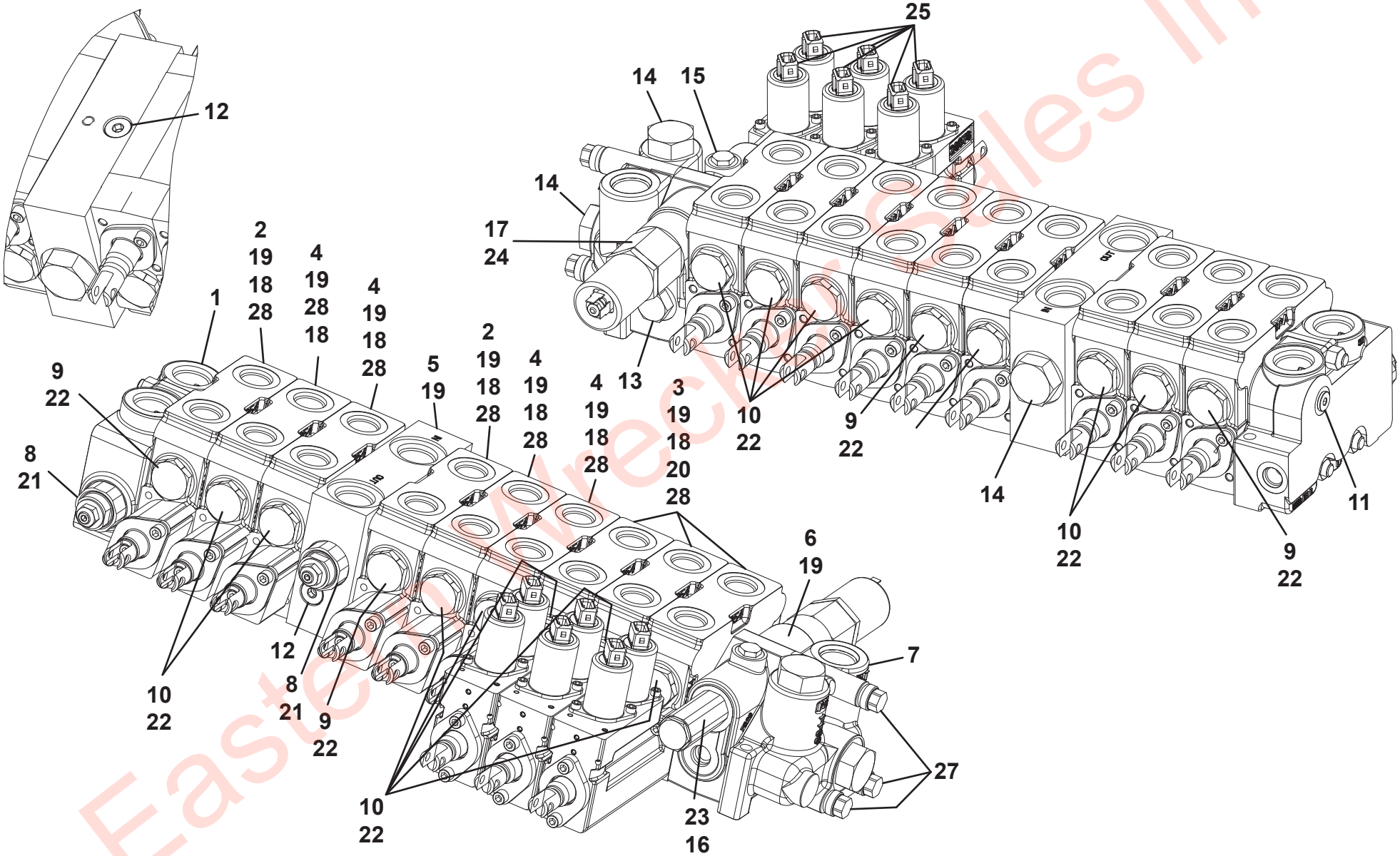

Eastern Wrecker Sales Inc

CONTROL INSTALLATION - 9 SECTION - 7 SOLENOID (PRIOR TO S/N 0230004251)

ITEM	PART NO.	DESCRIPTION	QTY	REV
	1001219700	Control Installation - 9 Section - 7 Solenoid	Ref	B
1	641632	Capscrew, 0.38”-16 X 4.00”	4	
2	1001130491	Control Knob	18	
3	1001134433	Decal	1	
4	1001154277	Decal	1	
5	1001166974	Washer, 0.38”	25	
6	1001166978	Washer, 0.25”	13	
7	1001168993	Capscrew, 0.38”-16 X 1.50”	22	
8	1001169080	Capscrew, 0.38”-16 X 1.25”	3	
9	1001169083	Capscrew, 0.38”-16 X 2.00”	4	
10	1001184827	Handle, Long	2	
11	1001184828	Handle, Short	7	
12	1001189779	Panel, Controls Rear LH	1	
13	1001189780	Panel, Controls Rear RH	1	
14	1001189781	Panel, Controls Front LH	1	
15	1001189782	Panel, Controls Front RH	1	
16	1001189783	Panel, Controls Top LH	1	
17	1001189784	Panel, Controls Top RH	1	
18	1001202499	Panel, Controls 9 Section LH	1	
19	1001202508	Panel, Controls 9 Section RH	1	
20	1001189993	Panel, Cable Bracket Cover	1	
21	1001189994	Plate	1	
22	1001202433	Valve Sub Assembly (See Separate Breakdown in this Section)	1	
23	1001194676	Screw, 0.25” X 0.75”	19	
24	1001194682	Bracket	1	
25	1001194736	Spacer	2	
26	1001196907	Decal	1	
27	1001196908	Decal	1	
28	1001196909	Decal	1	
29	1001196910	Decal	1	
30	1001196911	Decal	2	
31	4309000001	Coupling	7	
32	4309000007	Coupling	2	
33	7082000005	Bearing	2	
34	7114140618	Screw, 0.25”-20 X 0.75”	11	
35	7413000002	Nutsert, 0.25”-20	21	
36	7660140230	Nut, 0.25"-28	18	
37	7660162601	Locknut, 0.38"-16NC	33	
38	7690141200	Pin	18	
39	7691000075	Pin	18	
40	7754000009	Retaining Ring	2	
41	7806000008	Shaft	1	
42	7950140003	Lockwasher, 0.25" ID	21	
43	7950140143	Flatwasher, 0.25” ID	40	
44	7950160143	Flatwasher, 0.38" ID	66	
45	7990000003	Yoke	9	
46	7248000053	Cable Push Pull	9	
47	7796000012	Seal	3.5FT	
48	3520064	Plug	2	
49	1001201079	Plug	2	

Eastern Wrecker Sales Inc

CONTROL INSTALLATION - 9 SECTION - 7 SOLENOID (PRIOR TO S/N 0230004251)

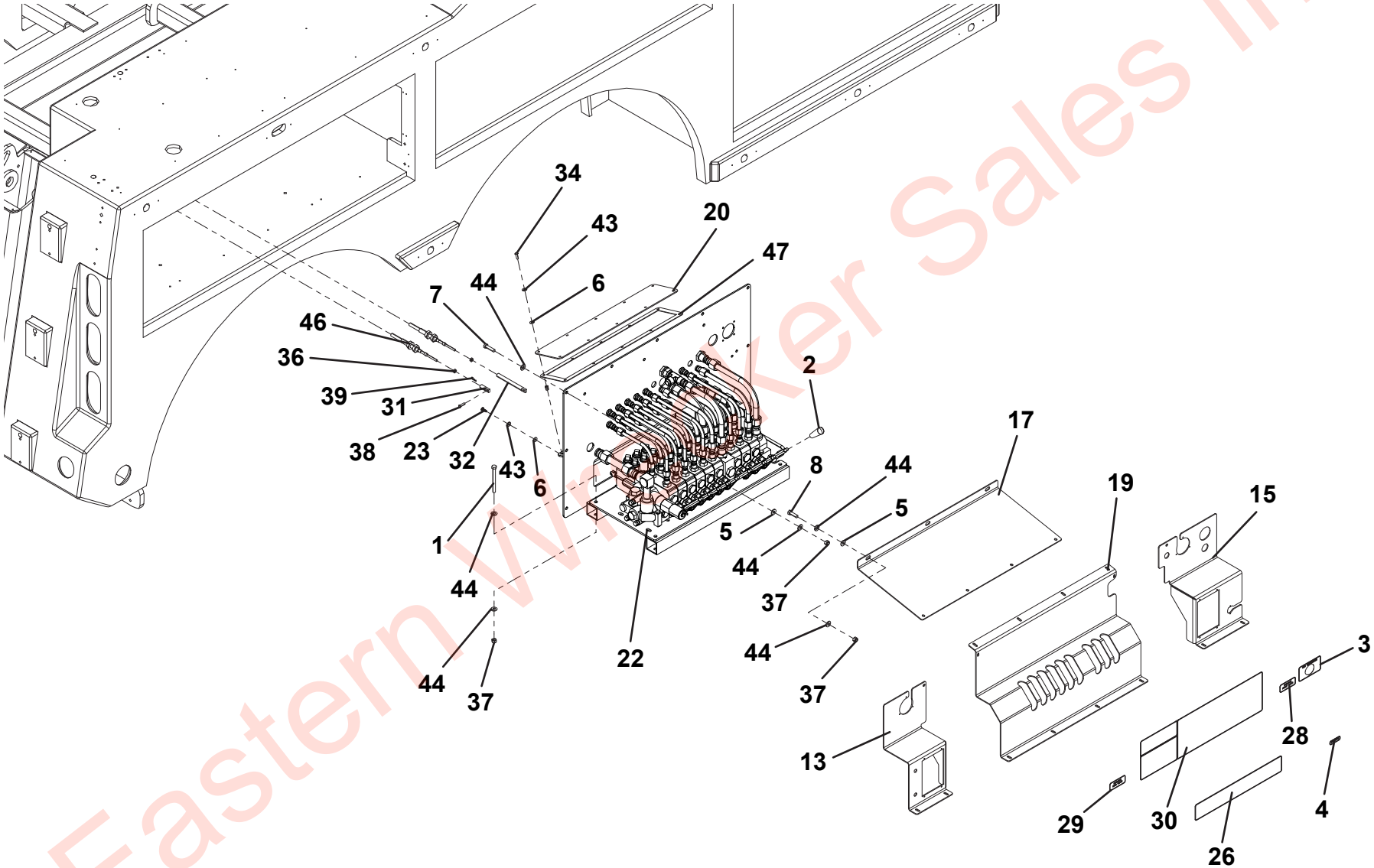

Eastern Wrecker Sales Inc

CONTROL INSTALLATION - 9 SECTION - 7 SOLENOID (PRIOR TO S/N 0230004251)

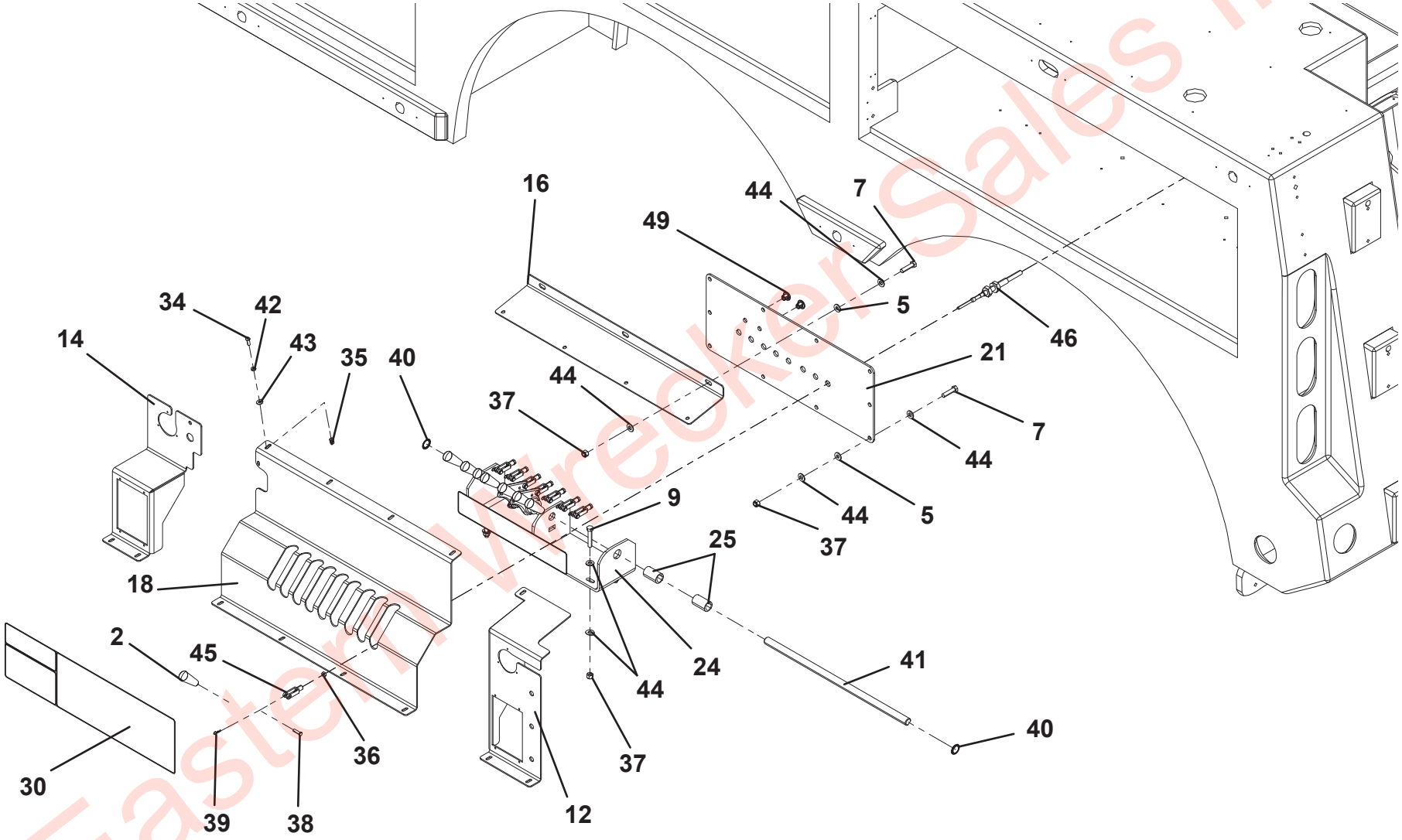

Eastern Wrecker Sales Inc

THIS PAGE INTENTIONALLY LEFT BLANK

Eastern Wrecker Sales Inc

CONTROL INSTALLATION - 9 SECTION - 7 SOLENOID (S/N 0230004251 TO PRESENT)

ITEM	PART NO.	DESCRIPTION	QTY	REV
	1001207716	Control Installation - 9 Section - 7 Solenoid	Ref	B
1	641632	Capscrew, 0.38”-16 X 4.00”	4	
2	3520064	Plug	2	
3	1001130491	Control Knob	18	
4	1001134433	Decal	1	
5	1001154277	Decal	1	
6	1001166974	Washer, 0.38”	21	
7	1001166978	Washer, 0.25”	3	
8	1001168993	Capscrew, 0.38”-16 X 1.50”	18	
9	1001169080	Capscrew, 0.38”-16 X 1.25”	3	
10	1001184827	Handle, Long	2	
11	1001184828	Handle, Short	7	
12	1001189784	Panel, Controls Top RH	1	
13	1001202508	Panel, Controls 9 Sect RH	1	
14	1001189993	Panel, Cable Bracket Cover	1	
15	1001202433	Valve Sub Assembly (See Separate Breakdown in this Section)	1	
16	1001194676	Screw, 0.25” X 0.75”	19	
17	1001194736	Spacer	1	
18	1001202517	Decal	1	
19	1001202518	Decal	1	
20	1001196909	Decal	1	
21	1001196910	Decal	1	
22	1001196911	Decal	2	
23	1001199311	Panel, Controls Front LH	1	
24	1001199322	Panel, Controls Rear RH	1	
25	1001199324	Panel, Controls Front RH	1	
26	1001214902	Panel, Controls Top LH	1	
27	1001219743	Panel, Controls 9 Sect LH	1	
28	1001219691	Panel, Controls Rear LH	1	
29	1001219937	Plate	1	
30	1001220068	Bracket	1	
31	4309000001	Coupling	3	
32	4309000007	Coupling	6	
33	7082000005	Bearing	2	
34	7114140618	Screw, 0.25”-20 X 0.75”	22	
35	7114141018	Screw, 0.25"-20 X 1.25"	10	
36	7413000002	Nutsert, 0.25”-20	22	
37	7660140230	Nut, 0.25"-28	18	
38	7660142601	Locknut, 0.25" -20NC	10	
39	7660162601	Locknut, 0.38"-16NC	29	
40	7690141200	Pin	18	
41	7691000075	Pin	18	
42	7754000009	Retaining Ring	2	
43	7806000008	Shaft	1	
44	7950140003	Lockwasher, 0.25" ID	22	
45	7950140143	Flatwasher, 0.25” ID	61	
46	7950160143	Flatwasher, 0.38" ID	58	
47	7990000003	Yoke	9	
48	1001202741	Cable Push Pull	5	
49	7796000012	Seal	8.7 FT	
50	1001169083	Capscrew, 0.38”-16 X 2.00”	4	
51	1001206801	Cable Push Pull	4	

Eastern Wrecker Sales Inc

CONTROL INSTALLATION - 9 SECTION - 7 SOLENOID (S/N 0230004251 TO PRESENT)

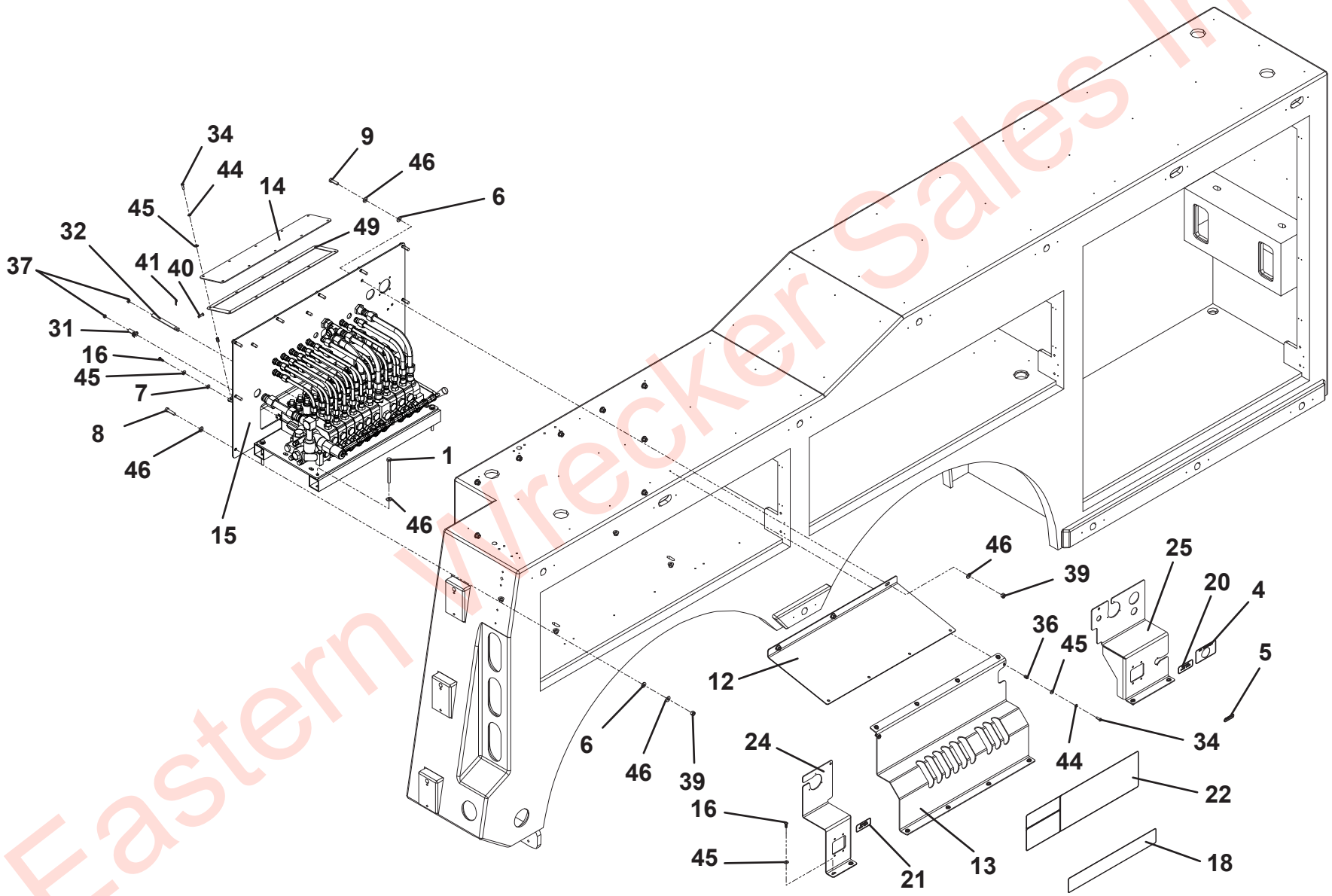

Eastern Wrecker Sales Inc

CONTROL INSTALLATION - 9 SECTION - 7 SOLENOID (S/N 0230004251 TO PRESENT)

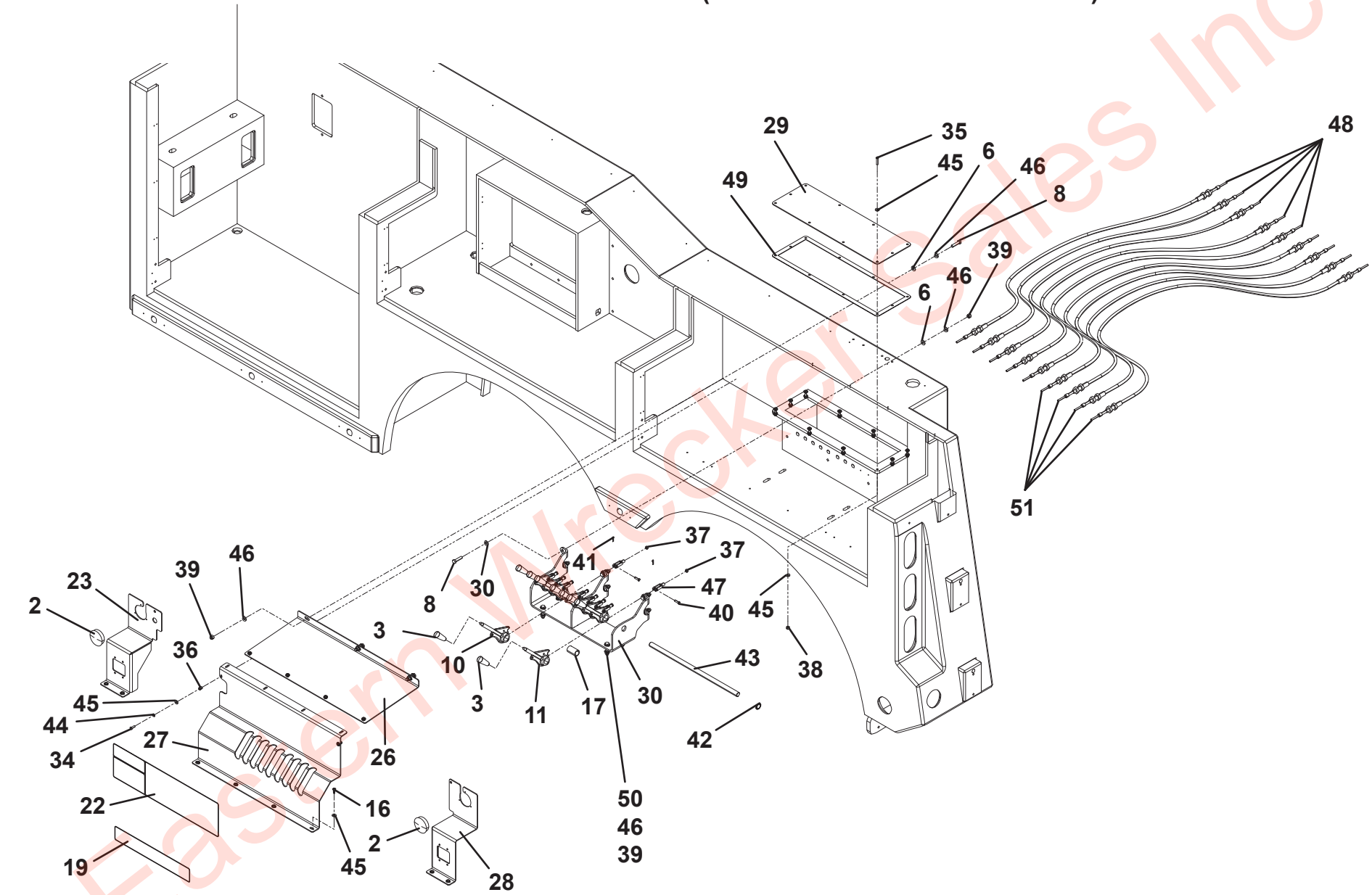

Eastern Wrecker Sales Inc

THIS PAGE INTENTIONALLY LEFT BLANK

Eastern Wrecker Sales Inc

CONTROL VALVE ASSEMBLY - 1001202433

ITEM	PART NO.	DESCRIPTION	QTY	REV
	1001202433	Control Valve Assembly	Ref	B
1	0641524	Capscrew, 5/16” - 18 x 3”	3	
2	2220374	Adapter	14	
3	2220376	Adapter	1	
4	2220451	Adapter	2	
5	2220473	Adapter	1	
6	2220700	Adapter	1	
7	2220947	Adapter	4	
8	2230024	Adapter	1	
9	2230025	Adapter	14	
10	2230027	Fitting	2	
11	2230089	Fitting	3	
12	4751500	Washer, 5/16” ID	3	
13	8760037	Union	4	
14	1001184772	Handle, Long	2	
15	1001184773	Handle, Short	7	
16	1001200355	Panel	1	
17	1001194069	Linkage	9	
18	3177000060	Mount	1	
19	7443000211	Fitting	2	
20	7660162601	Locknut, 0.38” - 16NC	3	
21	1001203506	Valve, 9 Sec. 7 Sol (See Separate Breakdown in this Section)	1	
22	7912000301*	Tube Assembly	1	
23	7912000302*	Tube Assembly	1	
24	7912000303*	Tube Assembly	1	
25	7912000304*	Tube Assembly	1	
26	7912000305*	Tube Assembly	1	
27	7912000306*	Tube Assembly	2	
28	7912000307*	Tube Assembly	2	
29	7912000308*	Tube Assembly	7	
30	7912000309*	Tube Assembly	7	
31	7912000310*	Tube Assembly	1	

* Also Available In Tube Kit - 7577000669

Eastern Wrecker Sales Inc

CONTROL VALVE ASSEMBLY - 1001202433

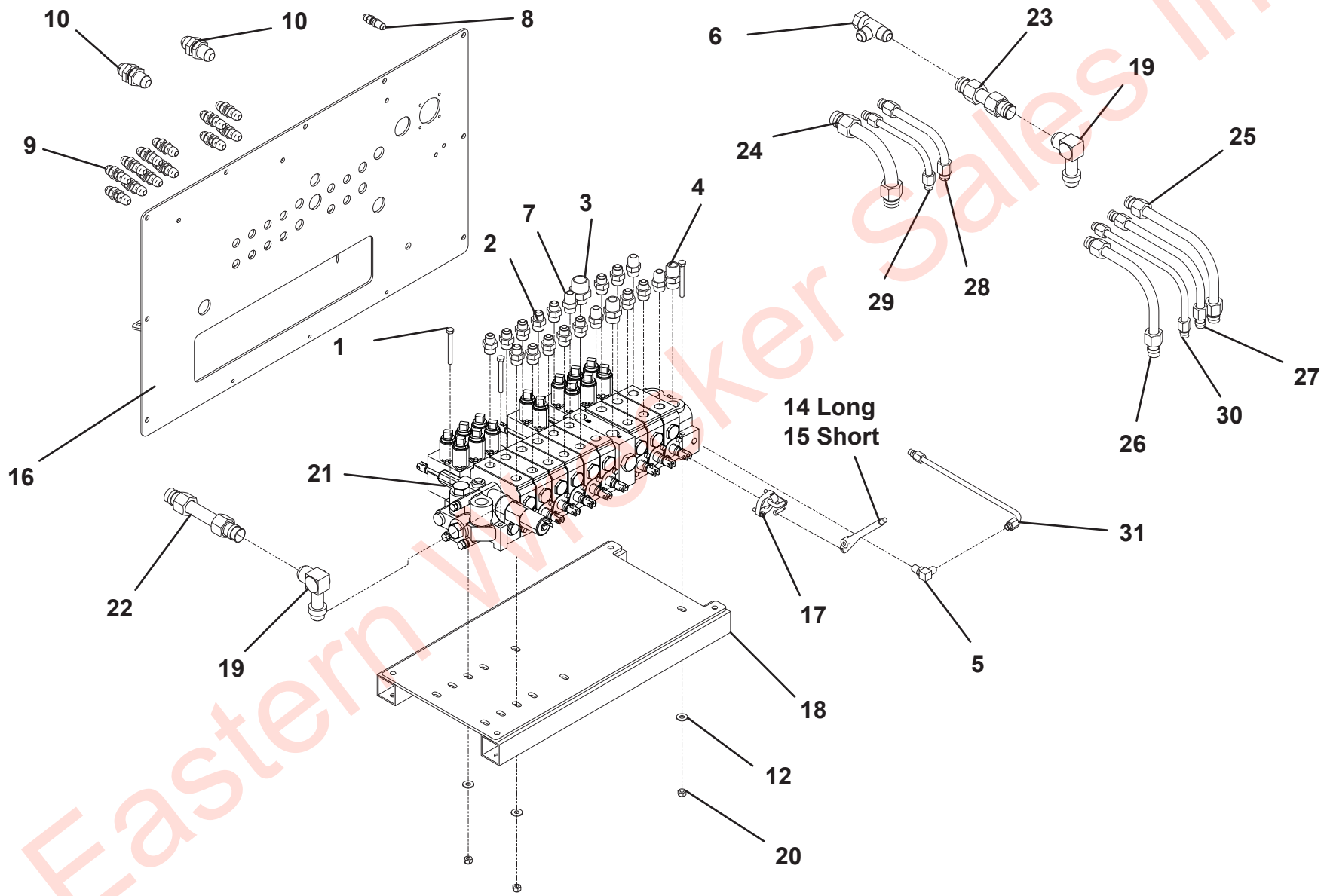

Eastern Wrecker Sales Inc

VALVE ASSEMBLY - 1001203506

ITEM	PART NO.	DESCRIPTION	QTY	REV
	1001203506	Valve Assembly	Ref	A
1	7935000315	Inlet Cover	1	
2	9935930120	Valve Section	2	
3	9935930119	Valve Section	5	
4	7935000316	Inlet	1	
5	7935000320	Valve Section	2	
6	7935000323	Utility Section	1	
7	7935000317	Outlet Cover	1	
8	91084009	Relief	2	
9	70050243	Plug	4	
10	7006847	Plug	14	
11	70050245	Plug	1	
12	70050246	Plug	2	
13	70050247	Plug	1	
14	91084017	Plug	3	
15	70050249	Plug	1	
16	70050241	Pressure Cartridge	1	
17	70050242	Solenoid	1	
18	70050250	Seal	15	
19	70050251	O-Ring	44	
20	70050252	O-Ring	6	
21	70051081	Seal Kit	2	
22	7029865	Seal Kit	18	
23	70051080	Seal Kit	1	
24	70050256	Seal Kit	1	
25	9346930086	Solenoid	8	
26	70051079	Seal	1	
27	70050239	Stud Assembly	1	
28	70050257	Wiper	18	

Eastern Wrecker Sales Inc

VALVE ASSEMBLY - 1001203506

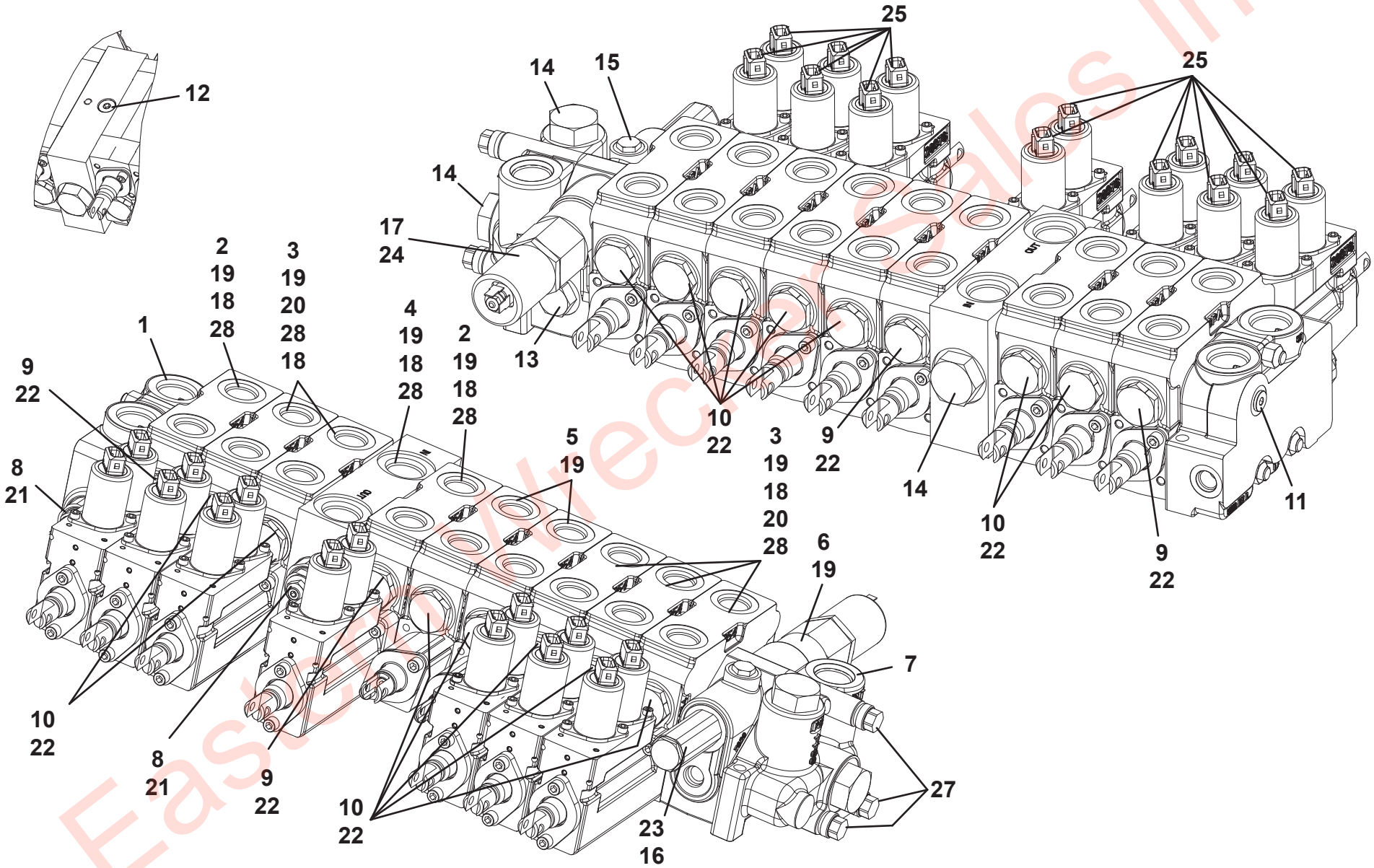

Eastern Wrecker Sales Inc

CONTROL INSTALLATION - 10 SECTION - 8 SOLENOID (PRIOR TO S/N 0230004251)

ITEM	PART NO.	DESCRIPTION	QTY	REV
	1001219701	Control Installation - 10 Section - 8 Solenoid	Ref	B
1	641632	Capscrew, 0.38”-16 X 4.00”	4	
2	1001130491	Control Knob Ball	20	
3	1001134433	Decal	1	
4	1001154277	Decal	1	
5	1001166974	Washer	25	
6	1001166978	Washer	13	
7	1001168993	Capscrew, 0.38”-16 X 1.50”	22	
8	1001169080	Capscrew, 0.38”-16 X 1.25”	3	
9	1001169083	Capscrew, 0.38”-16 X 2.00”	4	
10	1001184827	Handle - Long	3	
11	1001184828	Handle - Short	7	
12	1001189779	Panel, Controls Rear - LH	1	
13	1001189780	Panel, Controls Rear - RH	1	
14	1001189781	Panel, Controls Front - LH	1	
15	1001189782	Panel, Controls Rear - RH	1	
16	1001189783	Panel, Controls Top - LH	1	
17	1001189784	Panel, Controls Top - RH	1	
18	1001203231	Panel, Controls 10 Section LH	1	
19	1001203229	Panel, Controls 10 Section RH	1	
20	1001189993	Panel	1	
21	1001189993	Bulkhead	1	
22	1001202434	Valve assembly (See Separate Breakdown in this Section)	1	
23	1001194676	Screw, 0.25” X 0.75”	19	
24	1001194682	Bracket	1	
25	1001194736	Tube	2	
26	1001196907	Decal	1	
27	1001196908	Decal	1	
28	1001196909	Decal	1	
29	1001196910	Decal	1	
30	1001196911	Decal	2	
31	4309000001	Coupling	8	
32	4309000007	Coupling	2	
33	7082000005	Bearing	2	
34	7114140618	Screw, 0.25”-20 X 0.75”	21	
35	7413000002	Nutsert, 0.25”-20	21	
36	7660140230	Nut, 0.25"-28	20	
37	7660162601	Locknut, 0.38"-16NC	33	
38	7690141200	Pin	20	
39	7691000075	Pin	20	
40	7754000009	Retaining Ring	2	
41	7806000008	Shaft	1	
42	7950140003	Lockwasher, 0.25" ID	11	
43	7950140143	Flatwasher, 0.25” ID	40	
44	7950160143	Flatwasher, 0.38" ID	66	
45	7990000003	Yoke	9	
46	7248000053	Cable, Push-Pull	9	
47	7796000012	Seal	3.5FT	
48	3520064	Plug	2	
49	1001201079	Plug	2	

Eastern Wrecker Sales Inc

CONTROL INSTALLATION - 10 SECTION - 8 SOLENOID (PRIOR TO S/N 0230004251)

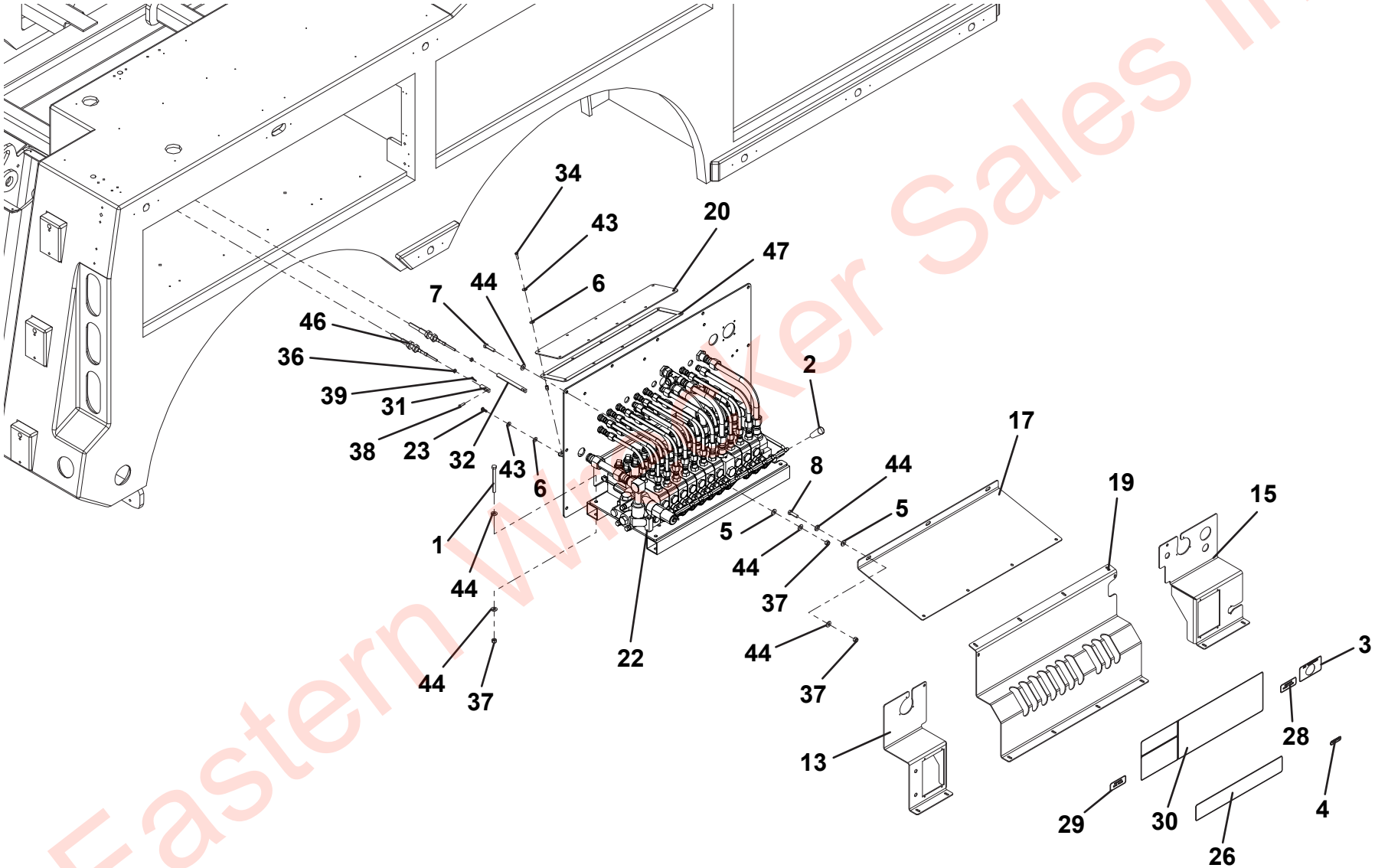

Eastern Wrecker Sales Inc

CONTROL INSTALLATION - 10 SECTION - 8 SOLENOID (PRIOR TO S/N 0230004251)

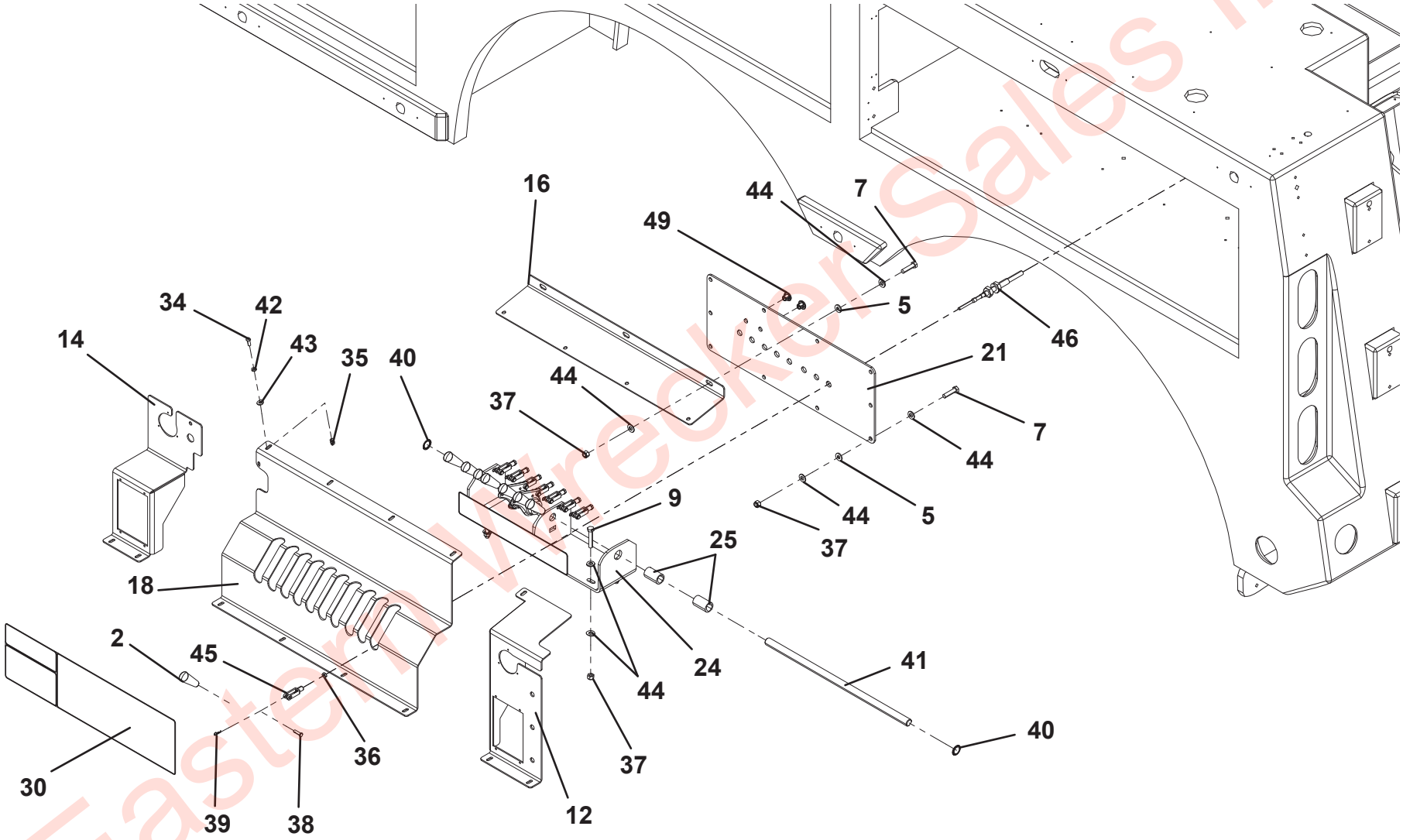

Eastern Wrecker Sales Inc

THIS PAGE INTENTIONALLY LEFT BLANK

Eastern Wrecker Sales Inc

CONTROL INSTALLATION - 10 SECTION - 8 SOLENOID (S/N 0230004251 TO PRESENT)

ITEM	PART NO.	DESCRIPTION	QTY	REV
	1001207717	Control Installation - 10 Section - 8 Solenoid	Ref	B
1	641632	Capscrew, 0.38”-16 X 4.00”	4	
2	3520064	Plug	2	
3	1001130491	Control Knob	20	
4	1001134433	Decal	1	
5	1001154277	Decal	1	
6	1001166974	Washer, 0.38”	21	
7	1001166978	Washer, 0.25”	3	
8	1001168993	Capscrew, 0.38”-16 X 1.50”	18	
9	1001169080	Capscrew, 0.38”-16 X 1.25”	3	
10	1001184827	Handle, Long	2	
11	1001184828	Handle, Short	7	
12	1001189784	Panel, Controls Top RH	1	
13	1001203229	Panel, Controls 10 Sect RH	1	
14	1001189993	Panel, Cable Bracket Cover	1	
15	1001202434	Valve Sub Assembly (See Separate Breakdown in this Section)	1	
16	1001194676	Screw, 0.25” X 0.75”	19	
17	1001194736	Spacer	1	
18	1001202517	Decal	1	
19	1001202518	Decal	1	
20	1001196909	Decal	1	
21	1001196910	Decal	1	
22	1001196911	Decal	2	
23	1001199311	Panel, Controls Front LH	1	
24	1001199322	Panel, Controls Rear RH	1	
25	1001199324	Panel, Controls Front RH	1	
26	1001214902	Panel, Controls Top LH	1	
27	1001219744	Panel, Controls 10 Sect LH	1	
28	1001219691	Panel, Controls Rear LH	1	
29	1001219937	Plate	1	
30	1001220068	Bracket	1	
31	4309000001	Coupling	3	
32	4309000007	Coupling	6	
33	7082000005	Bearing	2	
34	7114140618	Screw, 0.25”-20 X 0.75”	22	
35	7114141018	Screw, 0.25"-20 X 1.25"	10	
36	7413000002	Nutsert, 0.25”-20	22	
37	7660140230	Nut, 0.25"-28	18	
38	7660142601	Locknut, 0.25" -20NC	10	
39	7660162601	Locknut, 0.38"-16NC	29	
40	7690141200	Pin	18	
41	7691000075	Pin	18	
42	7754000009	Retaining Ring	2	
43	7806000008	Shaft	1	
44	7950140003	Lockwasher, 0.25" ID	22	
45	7950140143	Flatwasher, 0.25” ID	61	
46	7950160143	Flatwasher, 0.38" ID	58	
47	7990000003	Yoke	9	
48	1001202741	Cable Push Pull	5	
49	7796000012	Seal	8.7 FT	
50	1001169083	Capscrew, 0.38”-16 X 2.00”	4	
51	1001206801	Cable Push Pull	5	

Eastern Wrecker Sales Inc

CONTROL INSTALLATION - 10 SECTION - 8 SOLENOID (S/N 0230004251 TO PRESENT)

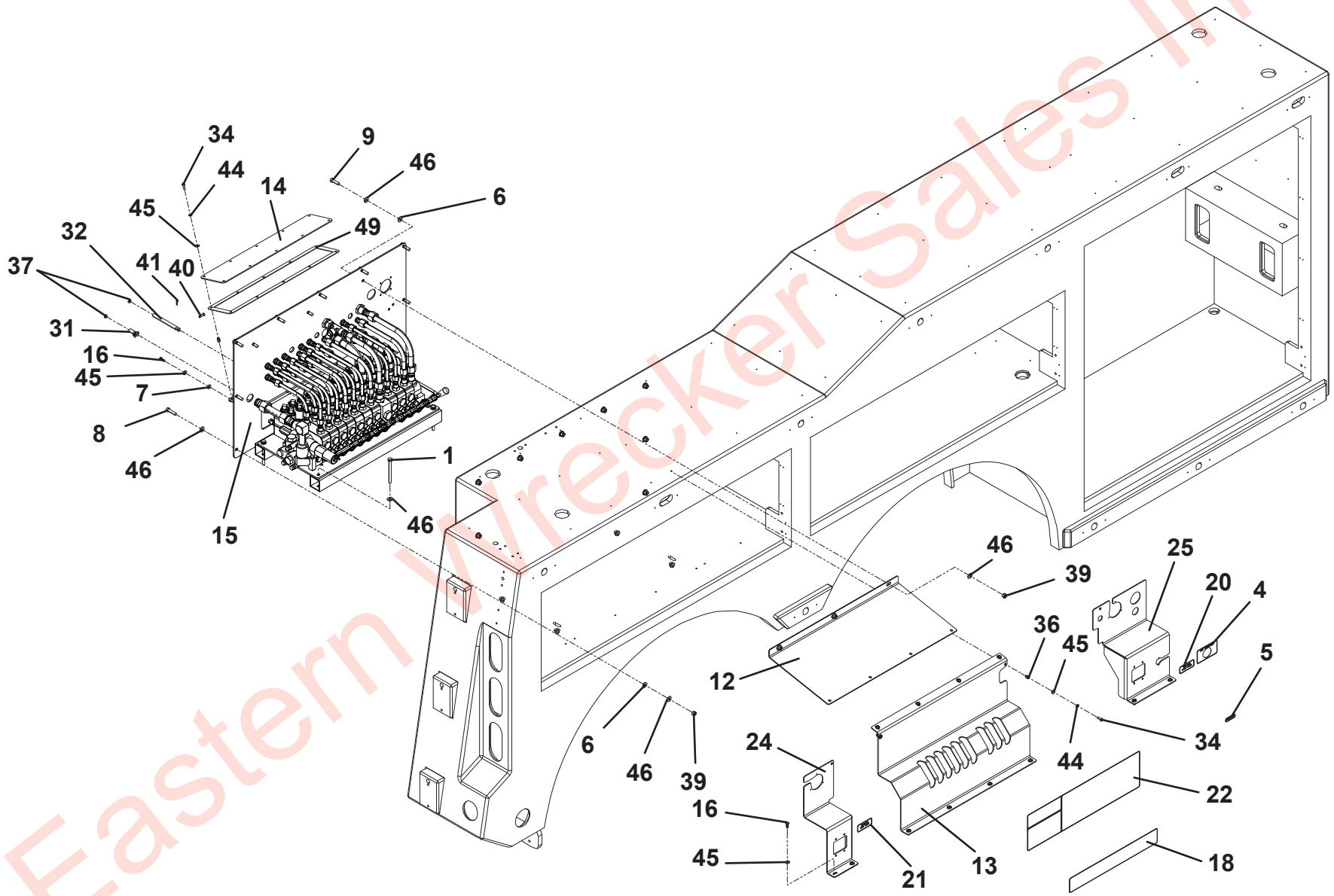

Eastern Wrecker Sales Inc

CONTROL INSTALLATION - 10 SECTION - 8 SOLENOID (S/N 0230004251 TO PRESENT)

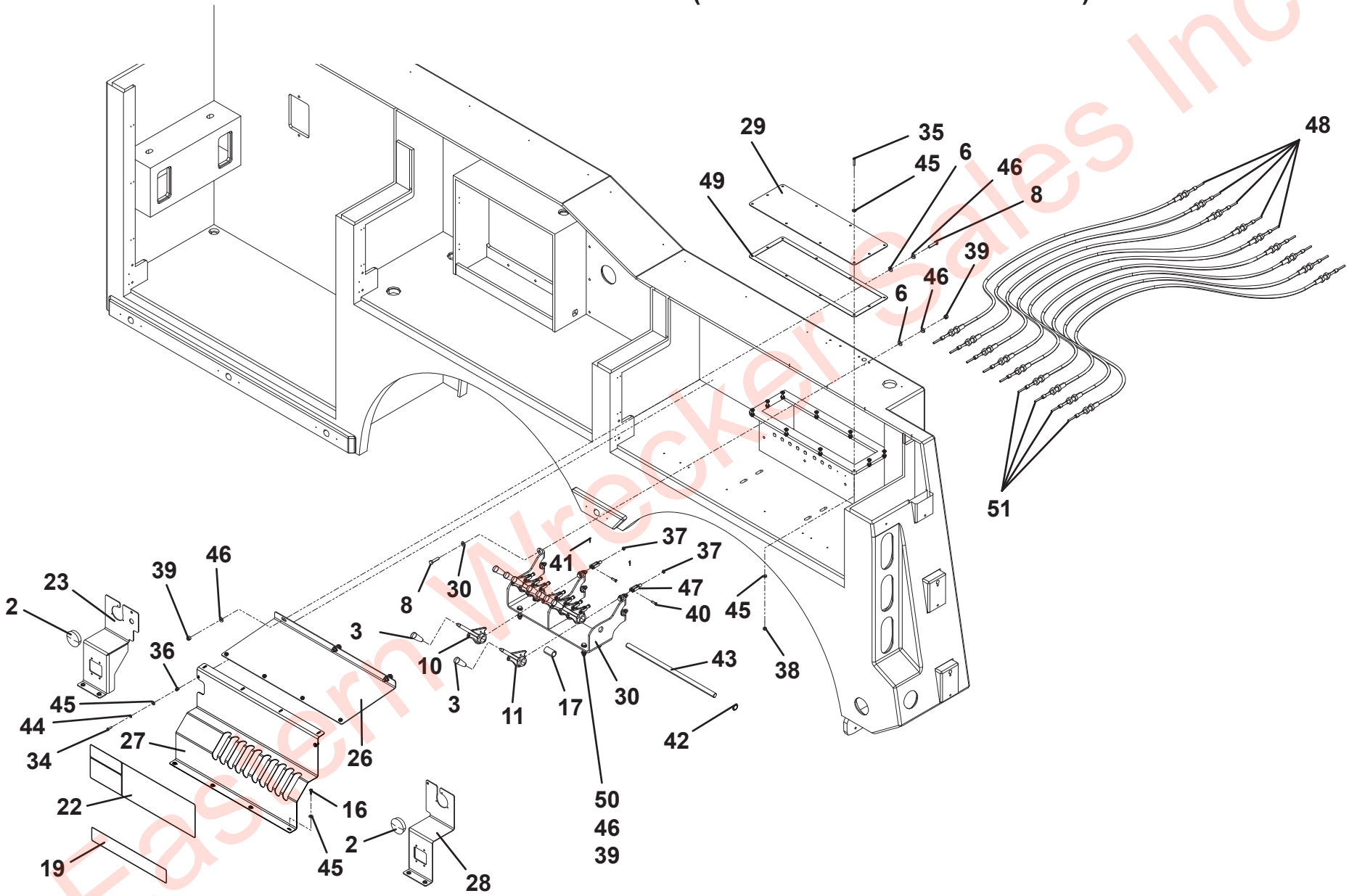

Eastern Wrecker Sales Inc

THIS PAGE INTENTIONALLY LEFT BLANK

Eastern Wrecker Sales Inc

CONTROL VALVE ASSEMBLY - 1001202434

ITEM	PART NO.	DESCRIPTION	QTY	REV
	1001202434	Control Valve Assembly	Ref	B
1	0641524	Capscrew, 5/16” - 18 x 3”	3	
2	2220374	Adapter	14	
3	2220376	Adapter	1	
4	2220451	Adapter	2	
5	2220473	Adapter	1	
6	2220700	Adapter	1	
7	2220947	Adapter	4	
8	2230024	Adapter	1	
9	2230025	Adapter	14	
10	2230027	Fitting	2	
11	2230089	Fitting	3	
12	4751500	Washer, 5/16” ID	3	
13	8760037	Union	4	
14	1001184772	Handle, Long	2	
15	1001184773	Handle, Short	7	
16	1001200355	Panel	1	
17	1001194069	Linkage	9	
18	3177000060	Mount	1	
19	7443000211	Fitting	2	
20	7660162601	Locknut, 0.38” - 16NC	3	
21	1001203506	Valve, 9 Sec. 7 Sol (See Separate Breakdown in this Section)	1	
22	7912000301*	Tube Assembly	1	
23	7912000302*	Tube Assembly	1	
24	7912000303*	Tube Assembly	1	
25	7912000304*	Tube Assembly	1	
26	7912000305*	Tube Assembly	1	
27	7912000306*	Tube Assembly	2	
28	7912000307*	Tube Assembly	2	
29	7912000308*	Tube Assembly	7	
30	7912000309*	Tube Assembly	7	
31	7912000310*	Tube Assembly	1	

* Also Available In Tube Kit - 7577000669

Eastern Wrecker Sales Inc

CONTROL VALVE ASSEMBLY - 1001202434

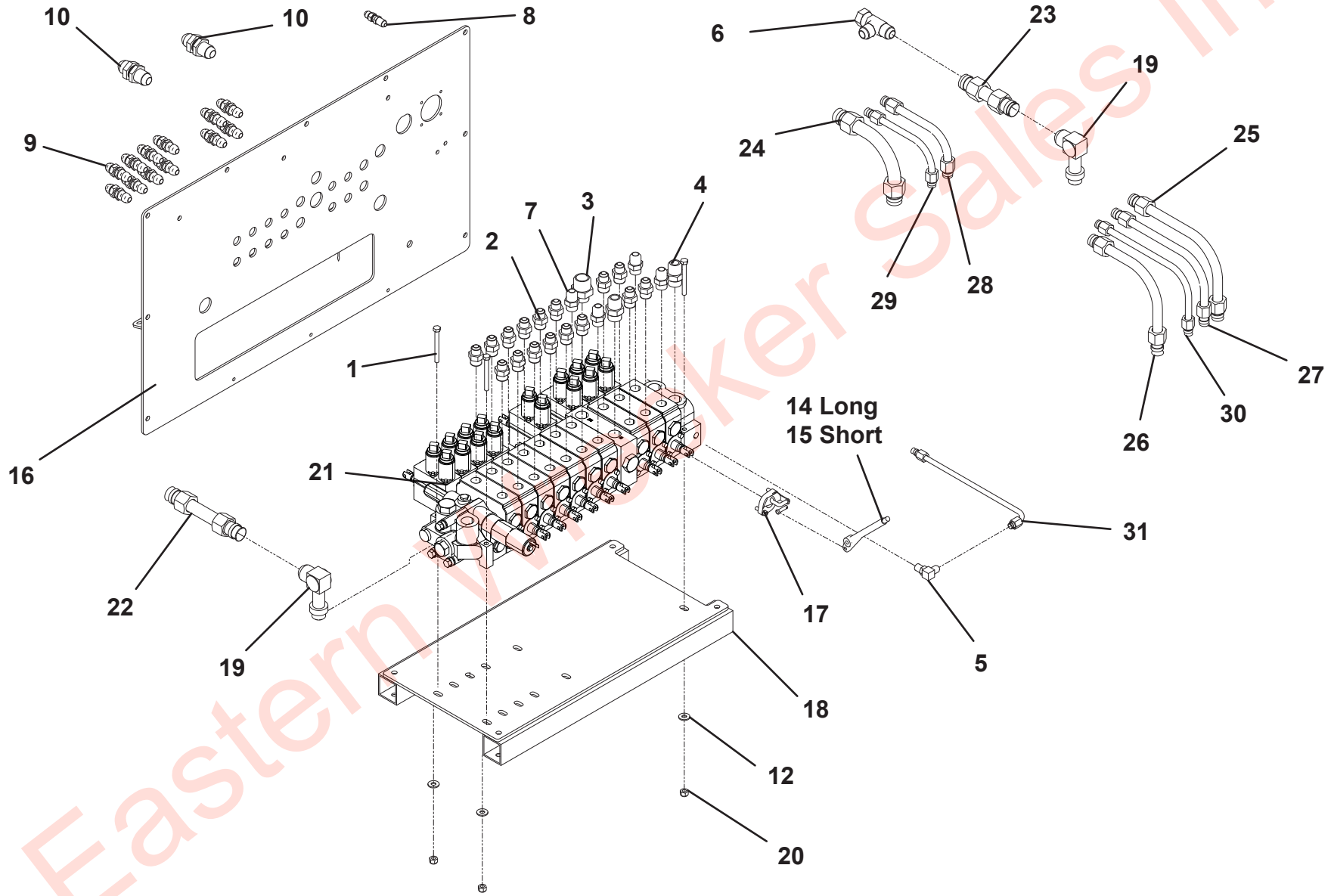

Eastern Wrecker Sales Inc

VALVE ASSEMBLY - 7935000374

ITEM	PART NO.	DESCRIPTION	QTY	REV
	7935000374	Valve Assembly	Ref	B
1	7935000315	Inlet Cover	1	
2	9935930120	Valve Section	2	
3	9935930119	Valve Section	4	
4	7935000316	Inlet	1	
5	7935000320	Valve Section	2	
6	7935000323	Utility Section	1	
7	7935000317	Outlet Cover	1	
8	91084009	Relief	2	
9	70050243	Plug	6	
10	7006847	Plug	12	
11	70050245	Plug	1	
12	70050246	Plug	2	
13	70050247	Plug	1	
14	91084017	Plug	3	
15	70050249	Plug	1	
16	70050241	Pressure Cartridge	1	
17	70050242	Solenoid	1	
18	70050250	Seal	18	
19	70050251	O-Ring	40	
20	70050252	O-Ring	6	
21	70051081	Seal Kit	2	
22	7029865	Seal Kit	20	
23	70051080	Seal Kit	1	
24	70050256	Seal Kit	1	
25	9346930086	Solenoid	16	
26	70051079	Seal	1	
27	70050239	Stud Assembly	1	
28	70050257	Wiper	18	

Eastern Wrecker Sales Inc

VALVE ASSEMBLY - 7935000374

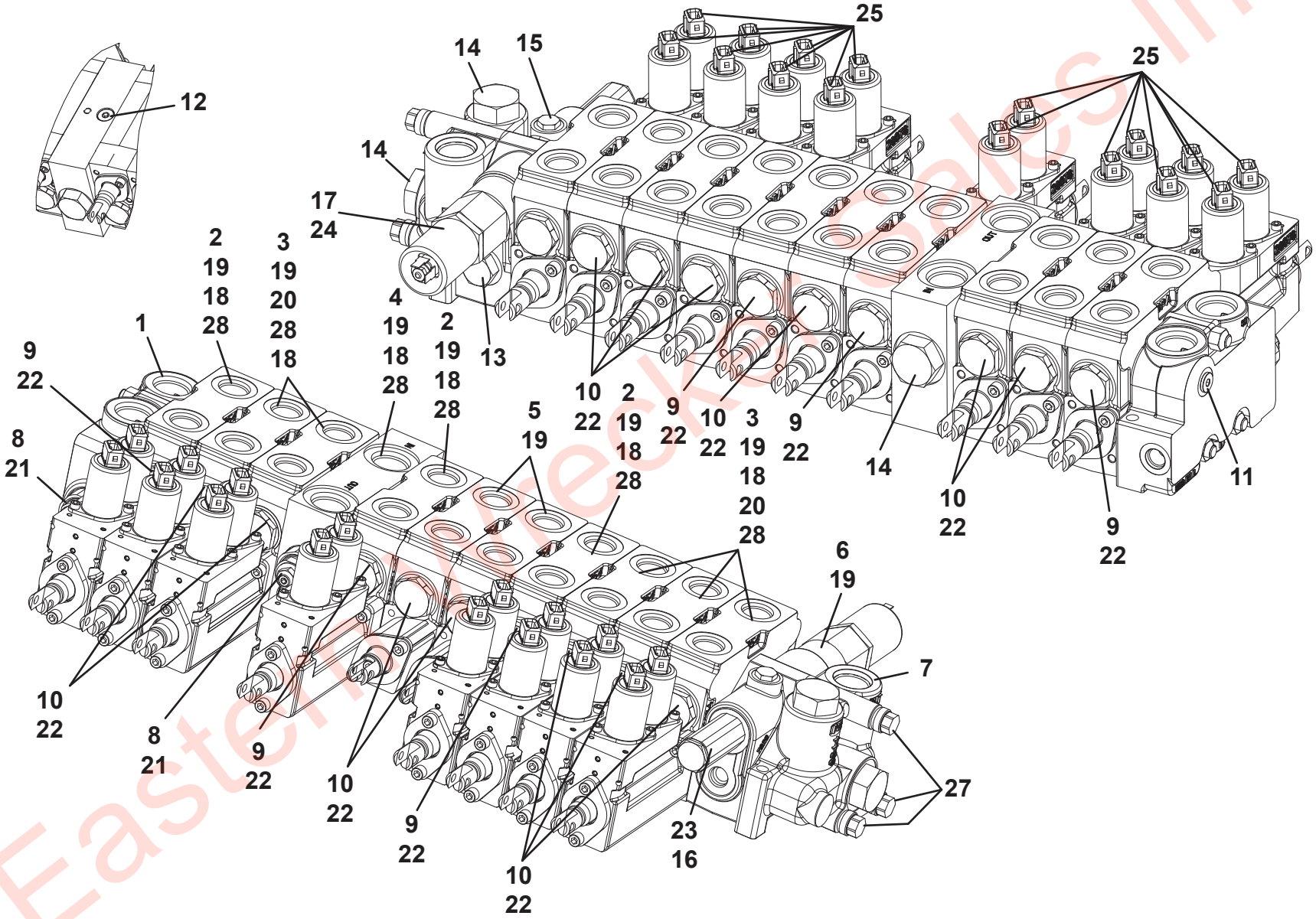

Eastern Wrecker Sales Inc

THIS PAGE INTENTIONALLY LEFT BLANK

Eastern Wrecker Sales Inc

SECTION 5 - CYLINDER

Eastern Wrecker Sales Inc

SPADE CYLINDER ASSEMBLY - 7320000006

ITEM	PART NO.	DESCRIPTION	QTY	REV
	7320000006	Spade Cylinder Assembly	Ref	B
1	9796250080	Seal, Wiper	1	
2	7019828	Seal	1	
3	9754250009	Ring, Back-up	1	
4	9796250057	Seal, “O” Ring	1	
5	9796250073	Seal	1	
6	9796250061	Seal, “O” Ring	1	
7	9796250066	Seal, “O” Ring	1	
8	9724250014	Ring, Wear	1	
9	9754250015	Ring, Wear	2	
10	7577000167	Kit, Seal	1	
11	7003212	Locknut	1	
12	7005322	Grease Fitting	2	
13	7005365	Plug, Port (Not Shown)	2	
14	70021648	Plug, Port (Not Shown)	2	
15	70050215	Valve, Counterbalance	2	
16	9912250004	Assembly, Tube	1	
17	9763250009	Assembly, Rod	1	
18	9553250009	Head	1	
19	70050531	Piston	1	

Eastern Wrecker Sales Inc

SPADE CYLINDER ASSEMBLY - 7320000006

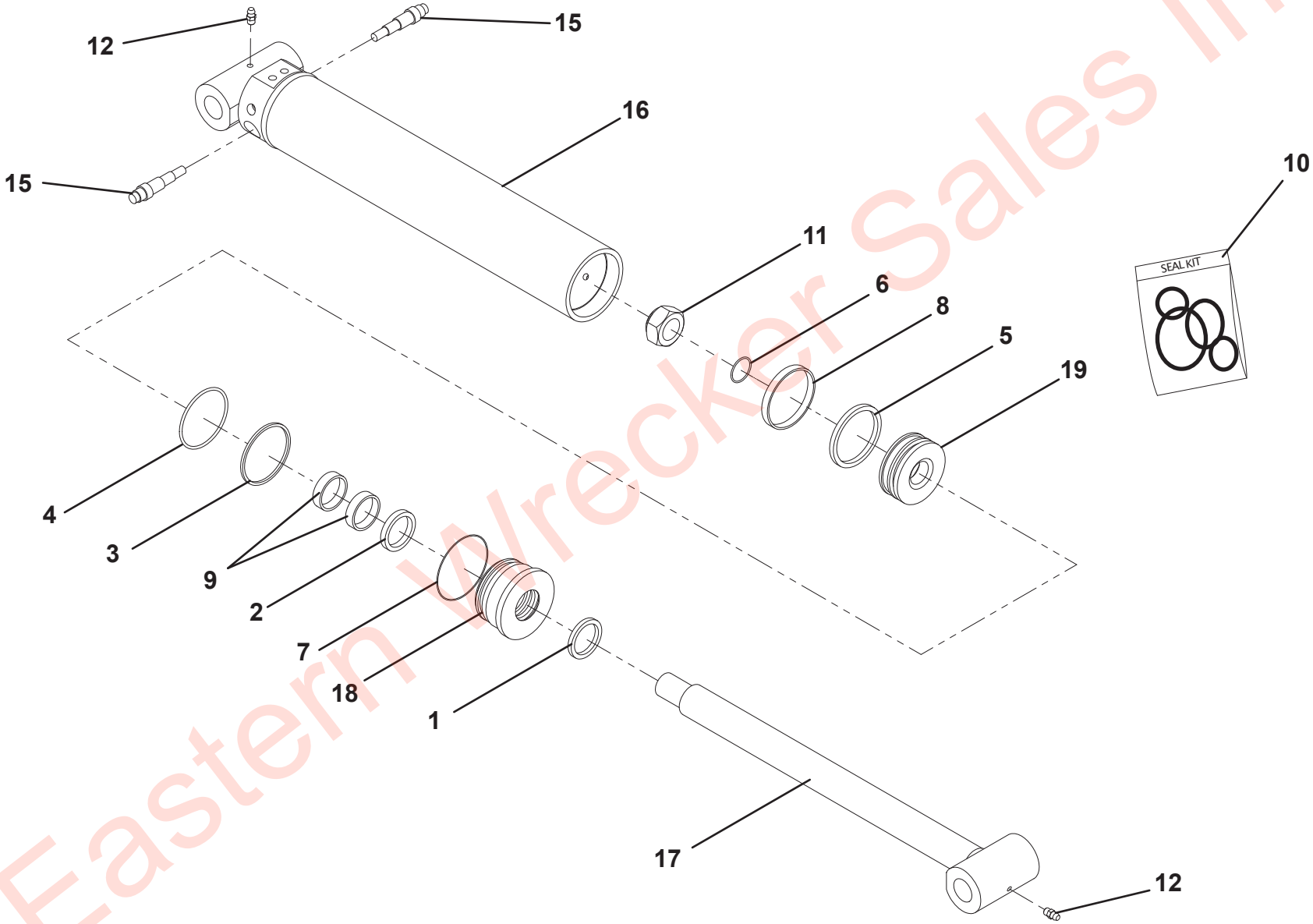

Eastern Wrecker Sales Inc

BOOM LIFT CYLINDER - 7320000070

ITEM	PART NO.	DESCRIPTION	QTY	REV
	7320000070	Spade Cylinder Assembly	Ref	B
1	9796250071	Seal	1	
2	9754250054	Seal	1	
3	9796250149	Back-up Ring	1	
4	9796250152	O-Ring	1	
5	9796250150	O-Ring	1	
6	9796250114	Wiper	1	
7	9796250151	O-Ring	1	
8	83304140	Wear Ring	4	
9	9754250055	Wear Ring	3	
10	7577250296	Seal Kit	1	
11	9661250027	Locknut	1	
12	7005365	Plug	4	
13	70021648	Plug	2	
14	7440030400	Grease Fitting	2	
15	9935250032	Counter Balance Valve	2	
16	70051189	Tube Assembly	1	
17	70051188	Rod Assembly	1	
18	9553250018	Piston	1	
19	9698250020	Head	1	
20	70051187	Spacer	1	

Eastern Wrecker Sales Inc

BOOM LIFT CYLINDER - 7320000070

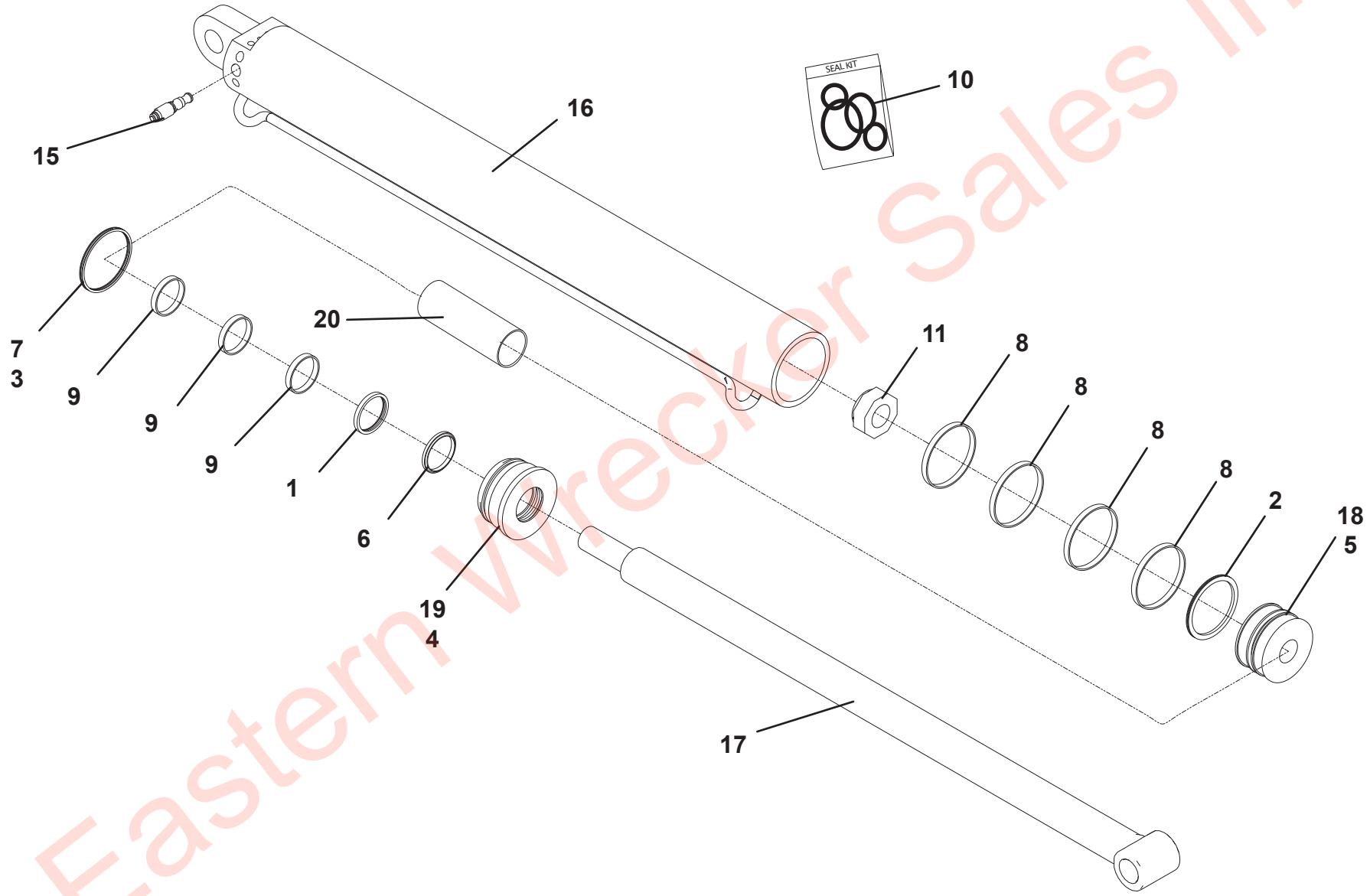

Eastern Wrecker Sales Inc

WRECKER BOOM CYLINDER - 7320000031

ITEM	PART NO.	DESCRIPTION	QTY	REV
	7320000031	Wrecker Boom Cylinder	Ref	B
1	NSS	Wiper	1	
2	NSS	Seal	1	
3	NSS	Back-Up	1	
4	NSS	O-Ring	1	
5	NSS	Seal	1	
6	NSS	O-Ring	1	
7	NSS	O-Ring (Not Shown)	1	
8	NSS	Wear Ring (Not Shown)	2	
9	NSS	Wear Ring	2	
10	7577000167	Seal Kit	1	
11	7003116	Locknut	1	
12	7005365	Port Plug (Not Shown)	1	
13	70021648	Port Plug (Not Shown)	2	
14	7440030400	Grease Fitting (Not Shown)	2	
15	9935250032	Counterbalance Valve (Not Shown)	1	
16	9912250014	Tube	1	
17	9763250019	Rod	1	
18	9553250010	Head	1	
19	7698250012	Piston	1	

Eastern Wrecker Sales Inc

WRECKER BOOM CYLINDER - 7320000031

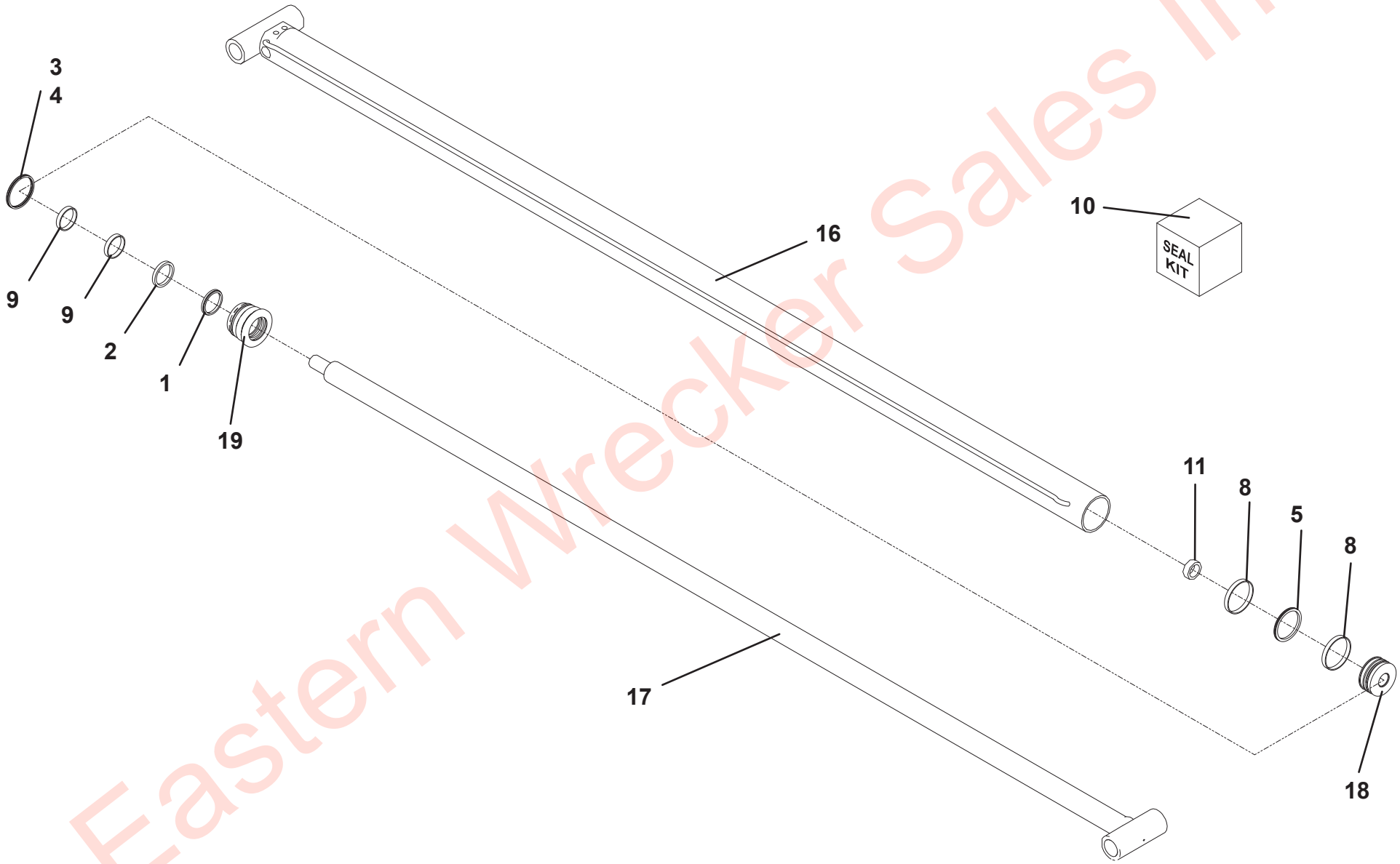

Eastern Wrecker Sales Inc

UNDERLIFT TILT CYLINDER - 7320000096

ITEM	PART NO.	DESCRIPTION	QTY	REV
	7320000096	Underlift Tilt Cylinder	Ref	B
1	9796250083	Seal, Wiper	1	
2	9754250011	Ring, Back-up	1	
3	9796250062	Seal, “O” Ring	1	
4	70050544	Seal	1	
5	9796250068	Seal, “O” Ring	1	
6	70050545	Seal	1	
7	9754250017	Ring, Wear	4	
8	80004049	Ring, Wear	4	
9	7577000063	Kit, Seal	1	
10	7005314	Locknut	1	
11	70021757	Setscrew (Not Shown)	1	
12	7005348	Grease Fitting	2	
13	70021648	Plug, Port (Not Shown)	2	
14	7005365	Plug, Port (Not Shown)	1	
15	70050215	Valve, Counterbalance	1	
16	70050594	Assembly, Tube	1	
17	70050595	Assembly, Rod	1	
18	9254250007	Headcap	1	
19	70050548	Piston	1	
20	70050549	Head	1	

Eastern Wrecker Sales Inc

UNDERLIFT TILT CYLINDER - 7320000096

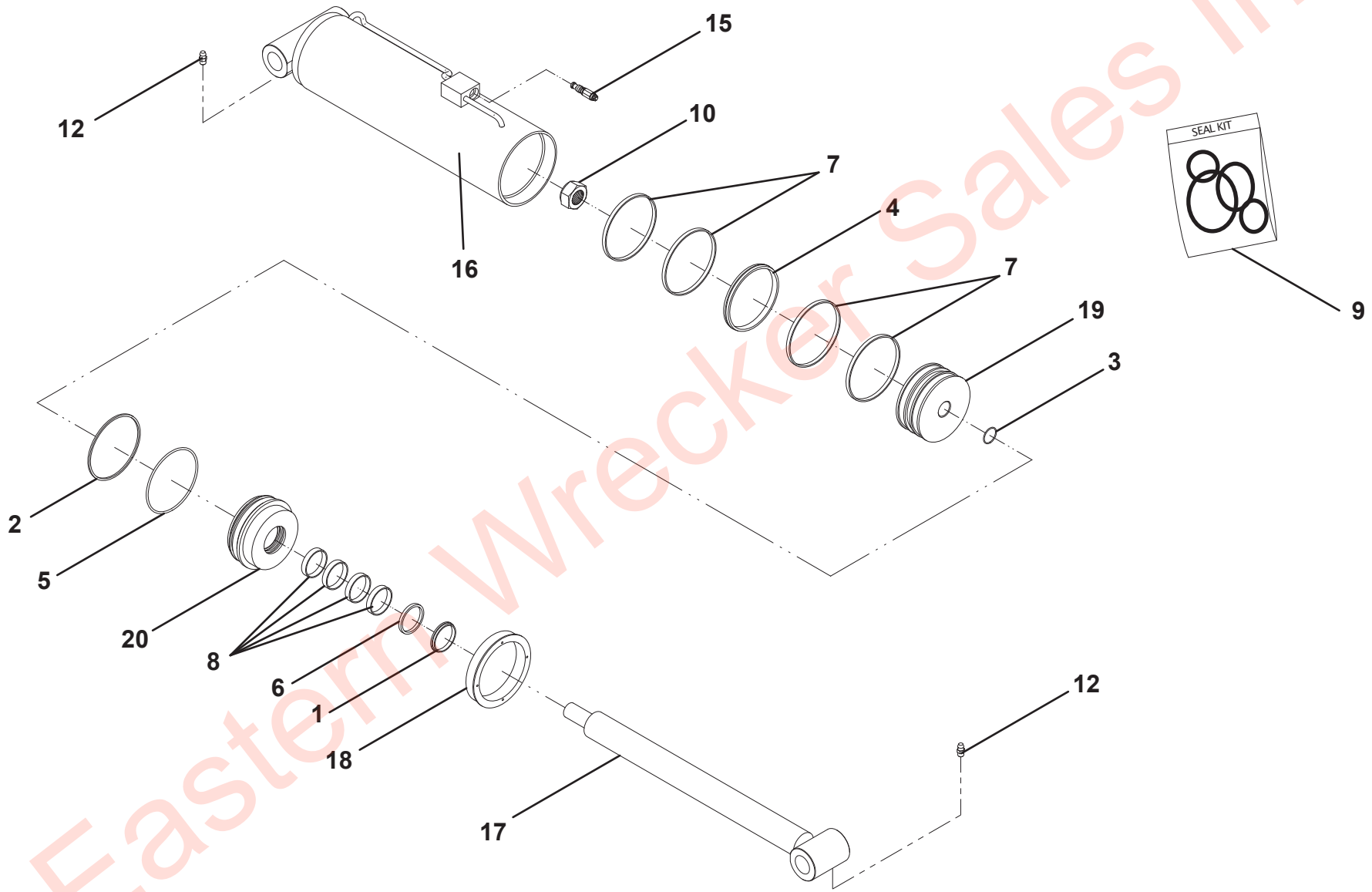

Eastern Wrecker Sales Inc

UNDERLIFT TILT CYLINDER - 7320000097

ITEM	PART NO.	DESCRIPTION	QTY	REV
	7320000097	Underlift Tilt Cylinder	Ref	B
1	9796250084	Wiper	1	
2	9796250059	O-Ring	1	
3	9796250065	O-Ring	1	
4	9796250077	Seal	1	
5	9754250012	Back-Up Ring	1	
6	9796250078	Seal	1	
7	9754250022	Wear Ring	2	
8	9754250023	Wear Ring	2	
9	70051199	Piston Head	1	
10	9661250019	Nut	1	
11	9701250006	Nylon Plug (Not Shown)	2	
12	83304181	Grease Fitting	2	
13	9786250005	Setscrew (Not Shown)	1	
14	9786250004	Setscrew (Not Shown)	4	
15	9935250032	Counterbalance	1	
16	70050232	Bushing	4	
17	9912250008	Tube Assembly	1	
18	9763250013	Rod Assembly	1	
19	9254250008	Headcap	1	
20	9698250005	Piston	1	
21	7577250188	Head	1	
22	70021648	Port Plug	2	
23	7005365	Port Plug	1	

Eastern Wrecker Sales Inc

UNDERLIFT TILT CYLINDER - 7320000097

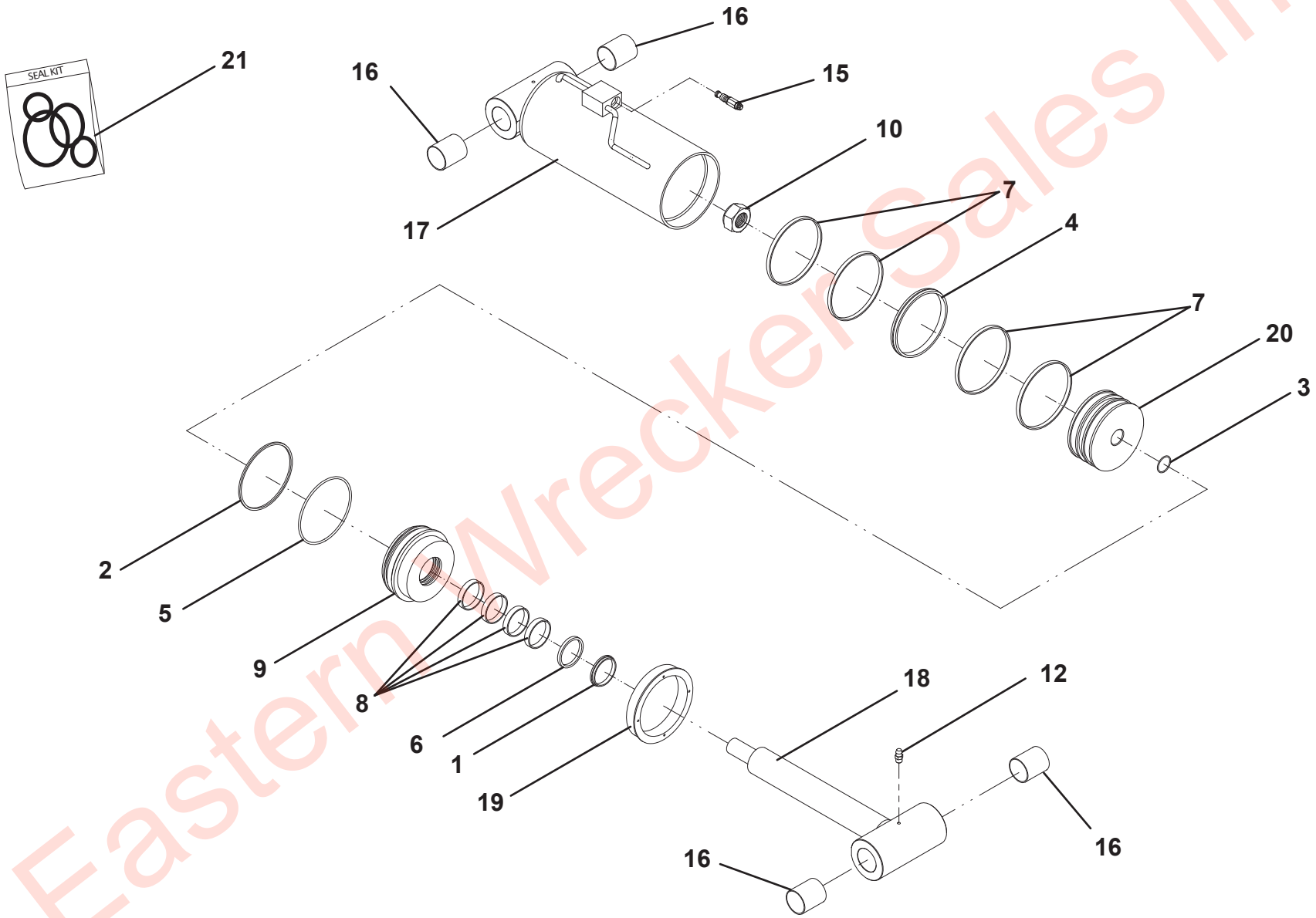

Eastern Wrecker Sales Inc

UNDERLIFT TILT CYLINDER - 7320000063

ITEM	PART NO.	DESCRIPTION	QTY	REV
	7320000063	Underlift Tilt Cylinder	Ref	B
1	9796250083	Seal, Wiper	1	
2	9754250011	Ring, Back-up	1	
3	9796250062	Seal, “O” Ring	1	
4	70050544	Seal	1	
5	7796250068	Seal, “O” Ring	1	
6	70050545	Seal	1	
7	9754250017	Ring, Wear	4	
8	80004049	Ring, Wear	4	
9	70050549	Head	1	
10	7005314	Locknut	1	
11	70021757	Setscrew (Not Shown)	1	
12	7005348	Grease Fitting	2	
13	7005365	Plug, Port (Not Shown)	1	
14	70021648	Plug, Port (Not Shown)	2	
15	70050215	Valve, Counterbalance	1	
16	70050232	Bushing	4	
17	70050546	Assembly, Tube	1	
18	70050547	Assembly, Rod	1	
19	9254250007	Headcap	1	
20	70050548	Piston	1	
21	7577000334	Kit, Seal	1	

Eastern Wrecker Sales Inc

UNDERLIFT TILT CYLINDER - 7320000063

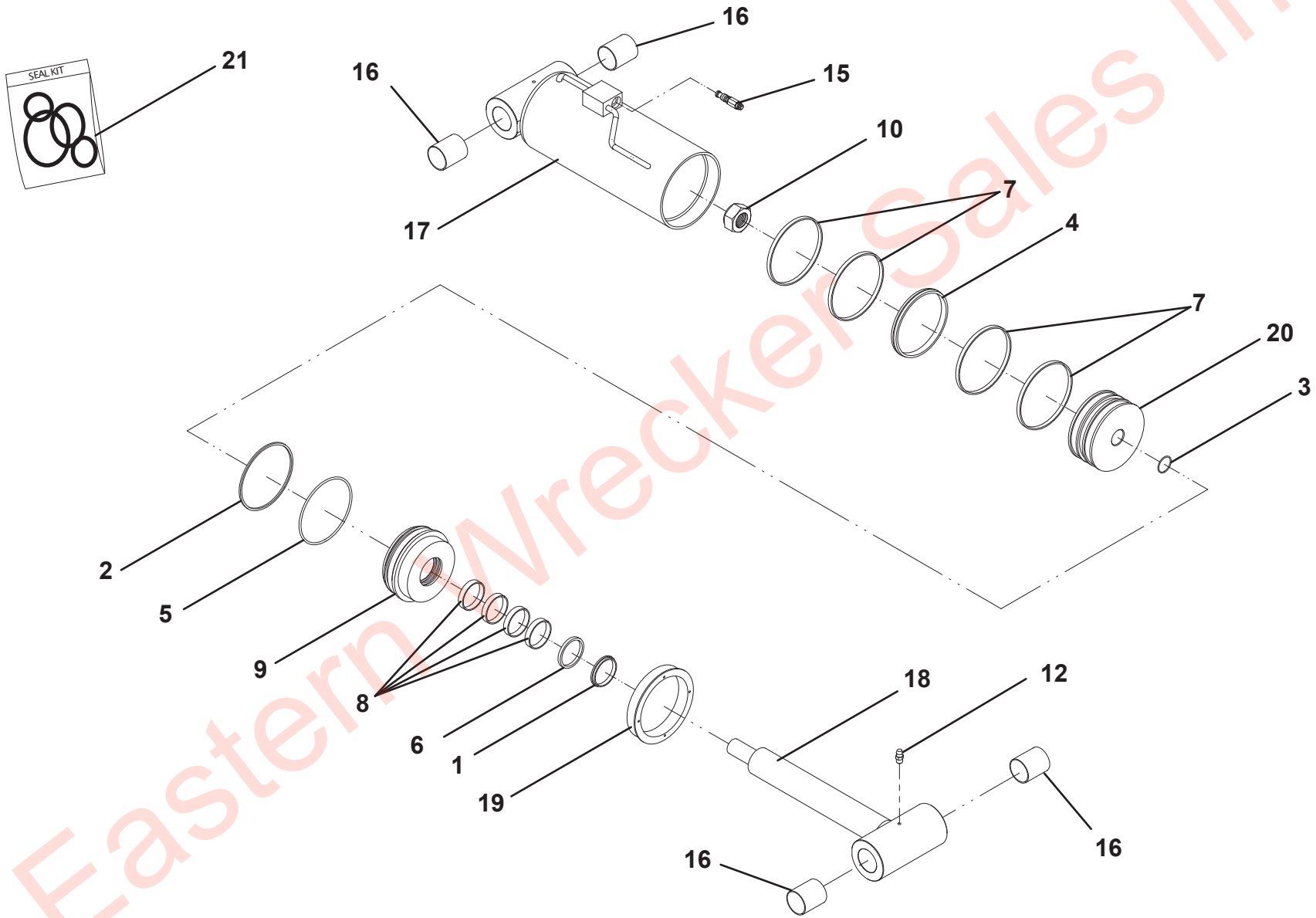

Eastern Wrecker Sales Inc

UNDERLIFT EXTENSION CYLINDER ASSEMBLY - 7320000038

ITEM	PART NO.	DESCRIPTION	QTY	REV
	7320000042	Underlift Extension Cylinder Assembly	Ref	B
1	9796250081	Seal, Wiper	2	
2	7019829	Seal	2	
3	7023518	Seal, “O” Ring	1	
4	9754250009	Ring, Back-up	2	
5	9796250057	Seal, “O” Ring	2	
6	9796250058	Seal, “O” Ring	2	
7	70050534	Seal, “O” Ring	2	
8	9796250073	Seal	2	
9	9754250014	Ring, Wear	3	
10	70050568	Ring, Wear	4	
11	7577250334	Kit, Seal	1	
12	7003116	Locknut	1	
13	70050535	Setscrew	4	
14	7005348	Grease Fitting (Not Shown)	2	
15	7005365	Plug, Port (Not Shown)	2	
16	70021648	Plug, Port (Not Shown)	2	
17	9935250025	Kit, Check Cartridge	1	
18	70051197	Assembly, Tube	1	
19	70051196	Assembly, Rod	1	
20	70050075	Assembly, Rod-Tube	1	
21	9553250010	Head	1	
22	7024101	Piston	1	
23	70050540	Piston	1	
24	70050541	Head	1	

Eastern Wrecker Sales Inc

UNDERLIFT EXTENSION CYLINDER ASSEMBLY - 7320000038

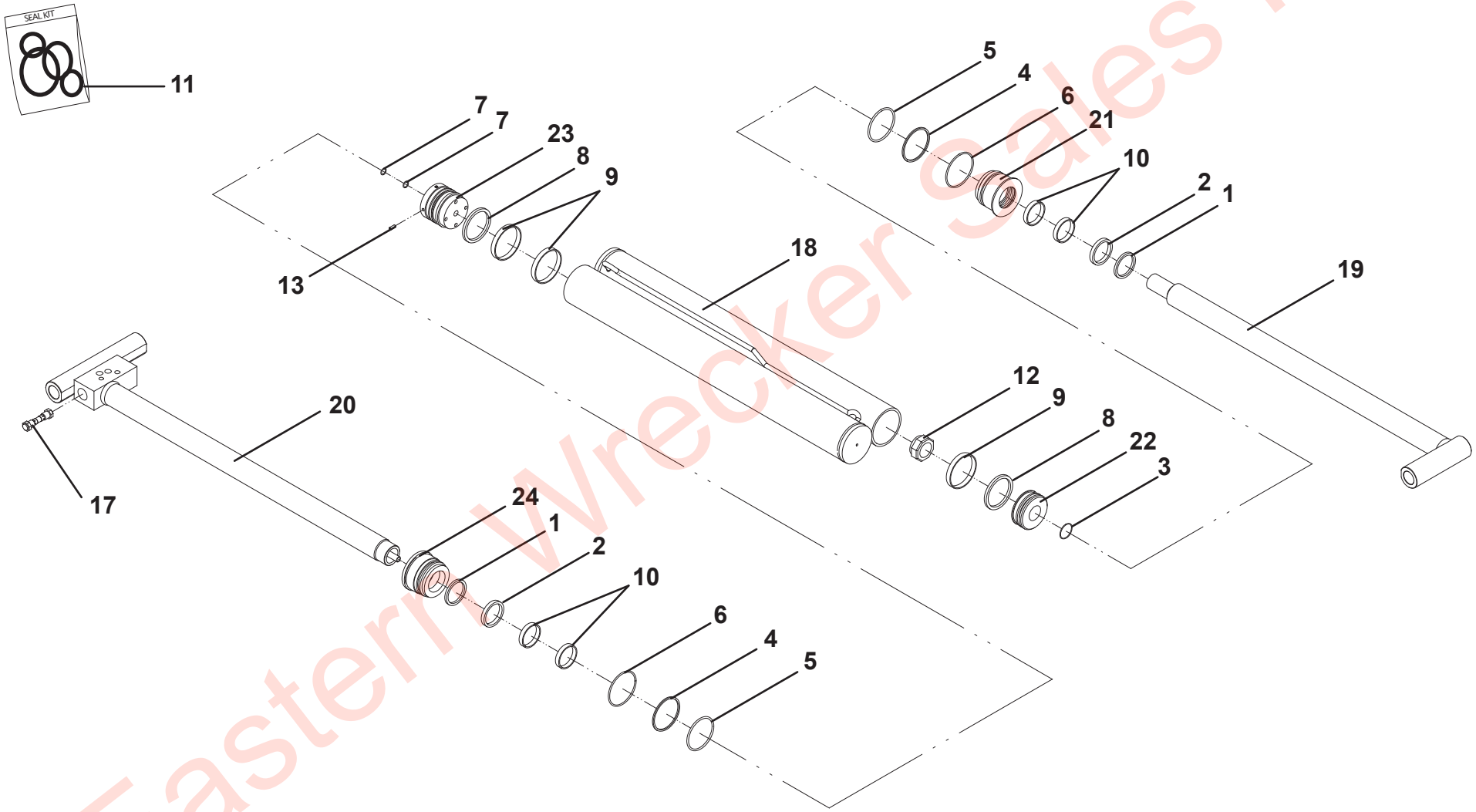

Eastern Wrecker Sales Inc

UNDERLIFT EXTENSION CYLINDER ASSEMBLY - 7320000068

ITEM	PART NO.	DESCRIPTION	QTY	REV
	7320000068	Underlift Extension Cylinder Assembly	Ref	B
1	9796250081	Seal, Wiper	2	
2	7019829	Seal	2	
3	7023518	Seal, “O” Ring	1	
4	9754250009	Ring, Back-up	2	
5	9796250057	Seal, “O” Ring	2	
6	9796250058	Seal, “O” Ring	2	
7	70050534	Seal, “O” Ring	2	
8	9796250073	Seal	2	
9	9754250014	Ring, Wear	3	
10	80004056	Ring, Wear	4	
11	7577250334	Kit, Seal	1	
12	7003116	Locknut	1	
13	70050535	Setscrew	4	
14	7005348	Grease Fitting (Not Shown)	2	
15	7005365	Plug, Port (Not Shown)	2	
16	70021648	Plug, Port (Not Shown)	2	
17	9935250025	Kit, Check Cartridge	1	
18	70050550	Assembly, Tube	1	
19	70050551	Assembly, Rod	1	
20	70050552	Assembly, Rod-Tube	1	
21	9553250010	Head	1	
22	7024101	Piston	1	
23	70050540	Piston	1	
24	70050541	Head	1	

Eastern Wrecker Sales Inc

UNDERLIFT EXTENSION CYLINDER ASSEMBLY - 7320000068

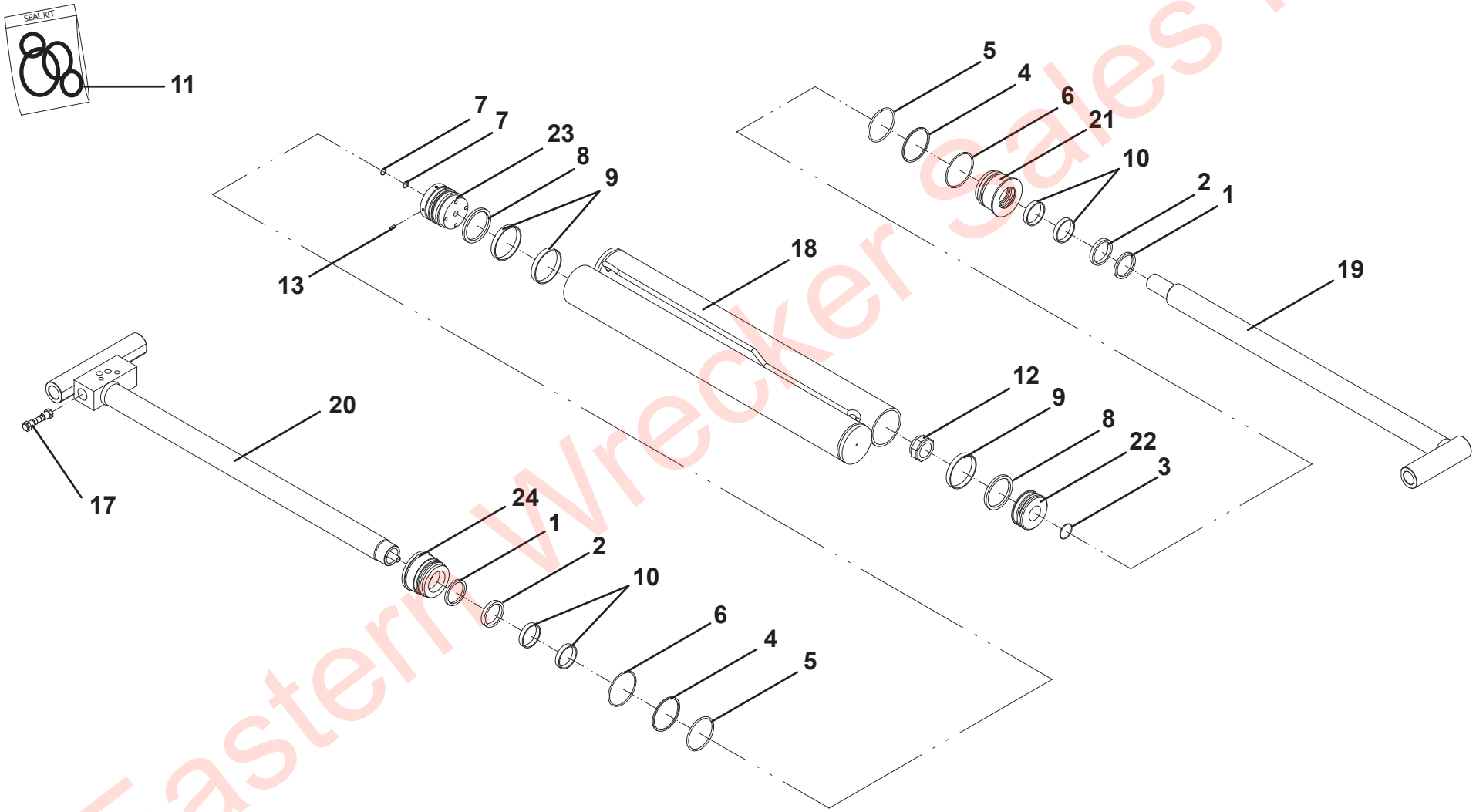

Eastern Wrecker Sales Inc

UNDERLIFT EXTENSION CYLINDER ASSEMBLY - 7320000026

ITEM	PART NO.	DESCRIPTION	QTY	REV
	7320000026	Underlift Extension Cylinder Assembly	Ref	B
1	9796250081	Seal, Wiper	2	
2	7019829	Seal	2	
3	7023518	Seal, “O” Ring	1	
4	9754250009	Ring, Back-up	2	
5	9796250057	Seal, “O” Ring	2	
6	9796250058	Seal, “O” Ring	2	
7	70050534	Seal, “O” Ring	2	
8	9796250073	Seal	2	
9	9754250014	Ring, Wear	3	
10	70050568	Ring, Wear	4	
11	7577250334	Kit, Seal	1	
12	7003116	Locknut	1	
13	70050535	Setscrew	4	
14	7005348	Grease Fitting (Not Shown)	2	
15	7005365	Plug, Port (Not Shown)	2	
16	70021648	Plug, Port (Not Shown)	2	
17	9935250025	Kit, Check Cartridge	1	
18	70050536	Assembly, Tube	1	
19	70050537	Assembly, Rod	1	
20	70050538	Assembly, Rod-Tube	1	
21	9553250010	Head	1	
22	7024101	Piston	1	
23	70050540	Piston	1	
24	70050541	Head	1	

Eastern Wrecker Sales Inc

UNDERLIFT EXTENSION CYLINDER ASSEMBLY - 7320000026

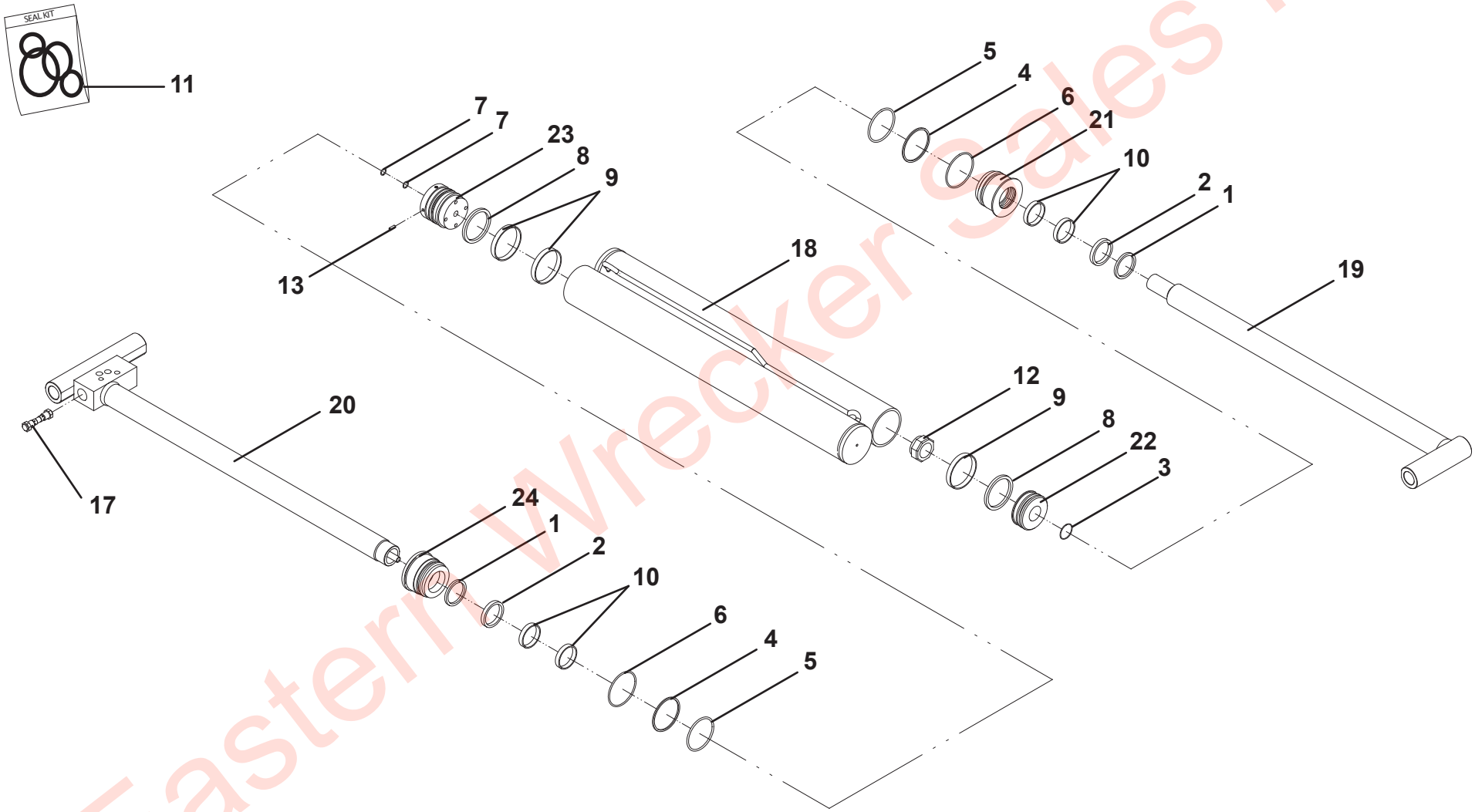

Eastern Wrecker Sales Inc

THIS PAGE INTENTIONALLY LEFT BLANK

Eastern Wrecker Sales Inc

SECTION 6 - HYDRAULIC

Eastern Wrecker Sales Inc

SUBFRAME HYDRAULIC TUBING

ITEM	PART NO.	DESCRIPTION	QTY	REV
	3912000040	Subframe Hydraulic Tubing	Ref	A
1	7661000022	Nut, 0.31"-18NC	30	
2	7115150850	Capscrew, 0.31"-18 NC x 1.00"	16	
3	7115150650	Capscrew, 0.31"-18 NC x 0.75"	38	
4	7209000024	Bushing	14	
5	7950150000	Washer, 0.31" ID	54	
6	7445101025	Union	4	
7	7445121225	Union	2	
8	7445080825	Union	2	
9	7209000023	Bushing	6	
10	7209000033	Bushing	4	
11	7661000027	Stacking Nut	15	
12	7007000036	Adapter	15	
13	7209000032	Bushing	6	
14	7274000030	Clamp	6	
15	7274000049	Clamp	5	
16	7912000280	Tube Assembly	1	
17	7912000281	Tube Assembly	1	
18	7912000282	Tube Assembly	1	
19	7912000283	Tube Assembly	1	
20	7912000284	Tube Assembly	1	
21	7912000285	Tube Assembly	1	
22	7912000287	Tube Assembly	2	
23	7912000288	Tube Assembly	2	
24	7912000289	Tube Assembly	2	

Eastern Wrecker Sales Inc

SUBFRAME HYDRAULIC TUBING

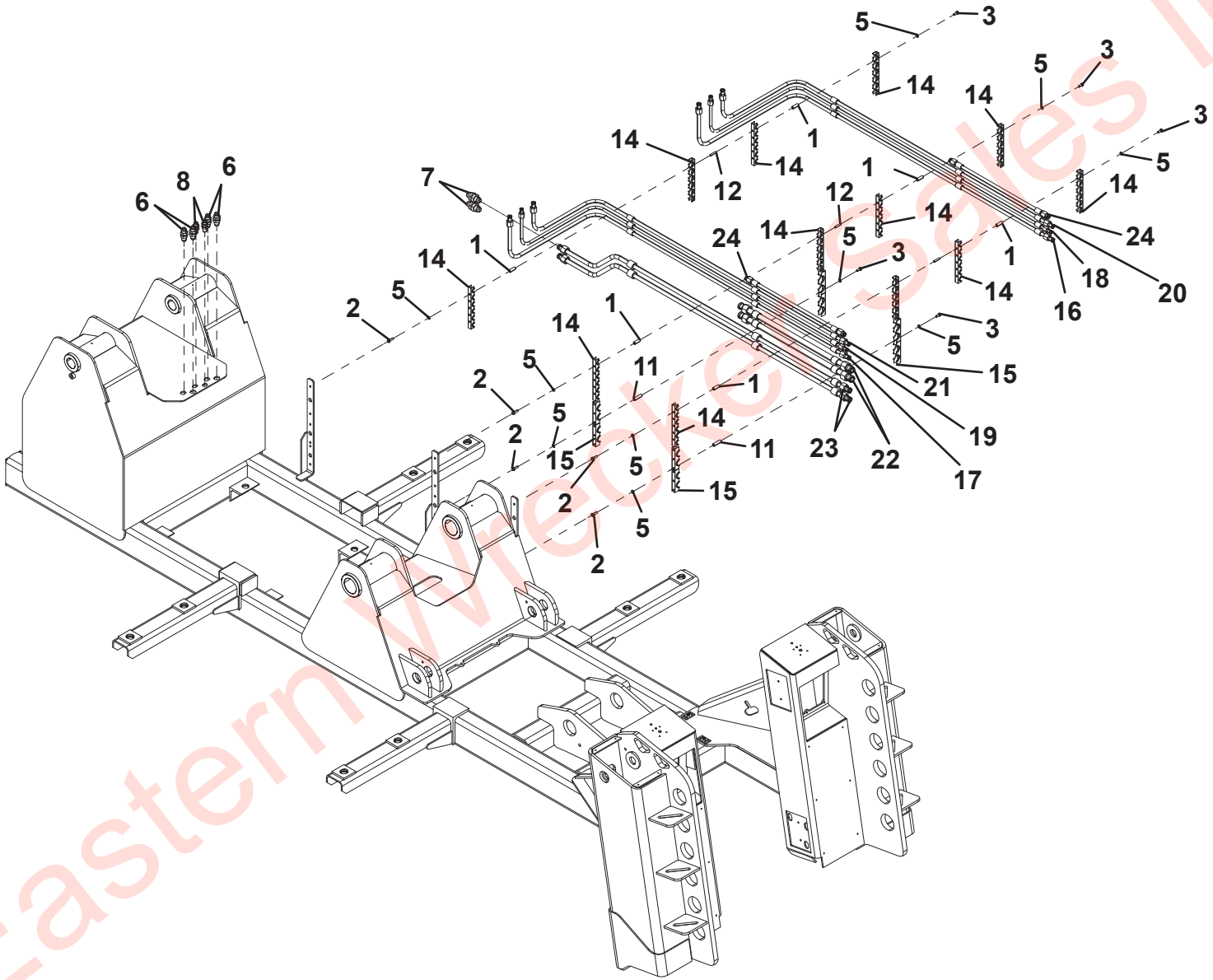

Eastern Wrecker Sales Inc

HYDRAULIC TANK INSTALLATION

ITEM	PART NO.	DESCRIPTION	QTY	REV
	2507650077	Hydraulic Tank Installation	Ref	B
1	7115181850	Capscrew, 0.50”-13NC x 2.25”	4	
2	7950180141	Flatwasher, 0.50” ID	4	
3	7660182601	Locknut, 0.50”-13NC	4	
4	7949000015	Washer	4	
5	7949000016	Washer	4	
6	7636000006	Mount	4	
7	3750000055	Hydraulic Tank (See Separate Breakdown in this Section)	1	

Eastern Wrecker Sales Inc

HYDRAULIC TANK INSTALLATION

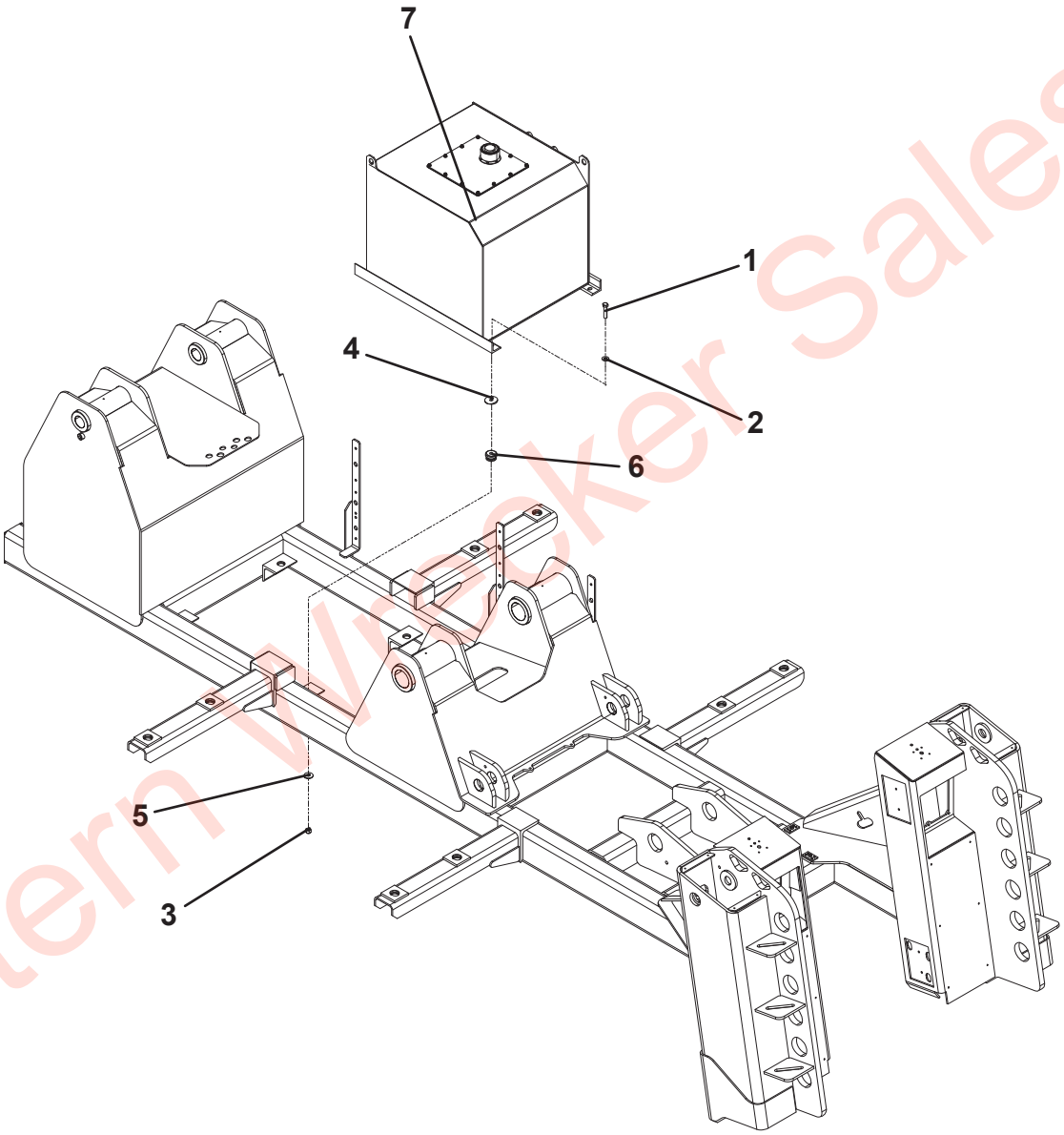

Eastern Wrecker Sales Inc

HYDRAULIC TANK ASSEMBLY

ITEM	PART NO.	DESCRIPTION	QTY	REV
	3750000055	Hydraulic Tank Assembly	Ref	C
1	3750000056	Hydraulic Tank	1	
2	7470000003	Gauge	1	
3	7701000025	Plug	1	
4	7796000051	Gasket	1	
5	4706002235	Plate	1	
6	7790141253	Screw, 0.25”-20NC x 0.75”	12	
7	7950140000	Lockwasher, 0.25” ID	12	
8	7183000004	Breather Cap	1	

Eastern Wrecker Sales Inc

HYDRAULIC TANK ASSEMBLY

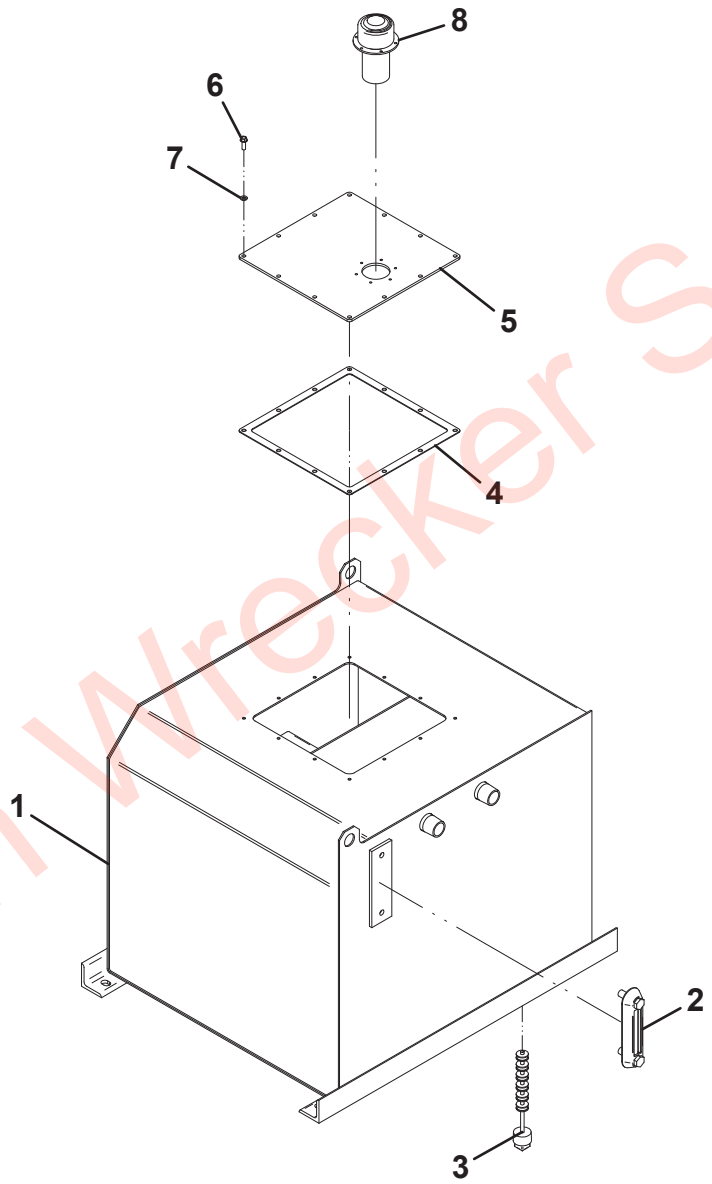

Eastern Wrecker Sales Inc

REAR SPADE TUBING

ITEM	PART NO.	DESCRIPTION	QTY	REV
	3912000036	Rear Spade Tubing	Ref	B
1	1001137487	Clamp	1	
2	1001136447	Clamp	5	
3	7912000119	Tube Assembly	1	
4	7912000120	Tube Assembly	1	
5	7912000121	Tube Assembly	1	
6	7912000122	Tube Assembly	1	

Eastern Wrecker Sales Inc

REAR SPADE TUBING

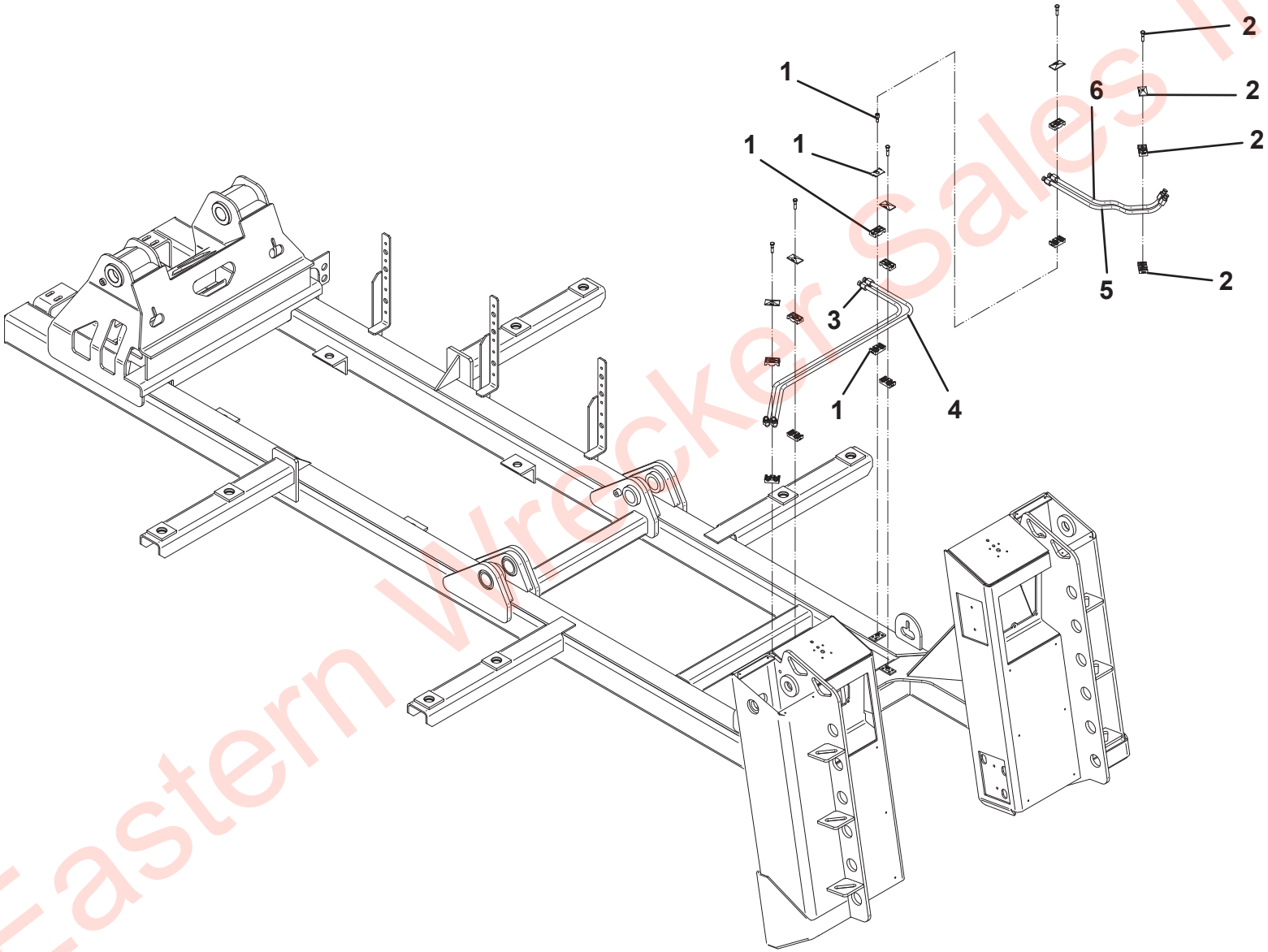

Eastern Wrecker Sales Inc

BOOM TUBE ASSEMBLY

ITEM	PART NO.	DESCRIPTION	QTY	REV
	3912000043	Boom Tube Assembly	Ref	B
1	7912000300	Tube Assembly	2	
2	7912000111	Tube Assembly	1	
3	7912000112	Tube Assembly	1	
4	1001136447	Clamp	4	
5	1001136559	Clamp	4	
6	1001142074	Clamp	4	

Eastern Wrecker Sales Inc

BOOM TUBE ASSEMBLY

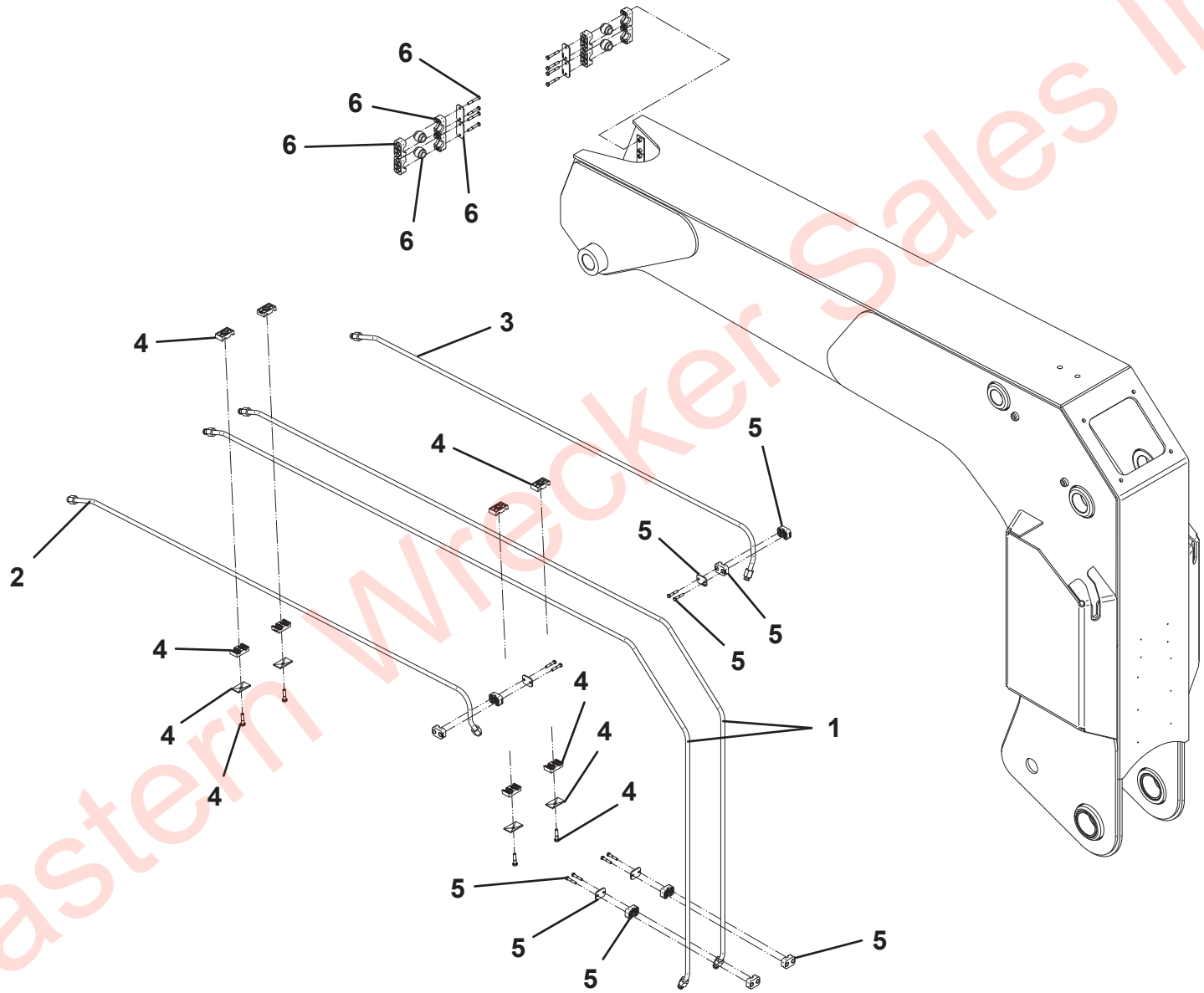

Eastern Wrecker Sales Inc

POWER TAKE OFF - CS SERIES

ITEM	PART NO.	DESCRIPTION	QTY	REV
	NPN	Power Take Off - CS Series	Ref	
1	70050316	Fuse	1	
2	70050315	Splice	1	
3	70050312	Wire	6 ft	
4	70050314	Connector	1	
5	70050325	Grommet	1	
6	70050328	Harness, Wire	1	
7	7870000062	Switch, Pressure	1	
8	70050329	Fitting, Elbow	1	
9	70050330	Nipple	1	
10	70050313	Terminal	2	
11	70050331	Connector	3	
12	7706000005	Bracket, Switch	1	
13	7706000001	Plate	1	
14	7870000045	Switch	1	
15	70050319	Kit, Bolt	1	
16	7443000431	Fitting (Also available in kit #70050467)	1	
17	7443000244	Fitting (Also available in kit #70050467)	1	
18	70050468	Hose (Also available in kit #70050467)	1	

Eastern Wrecker Sales Inc

POWER TAKE OFF - CS SERIES

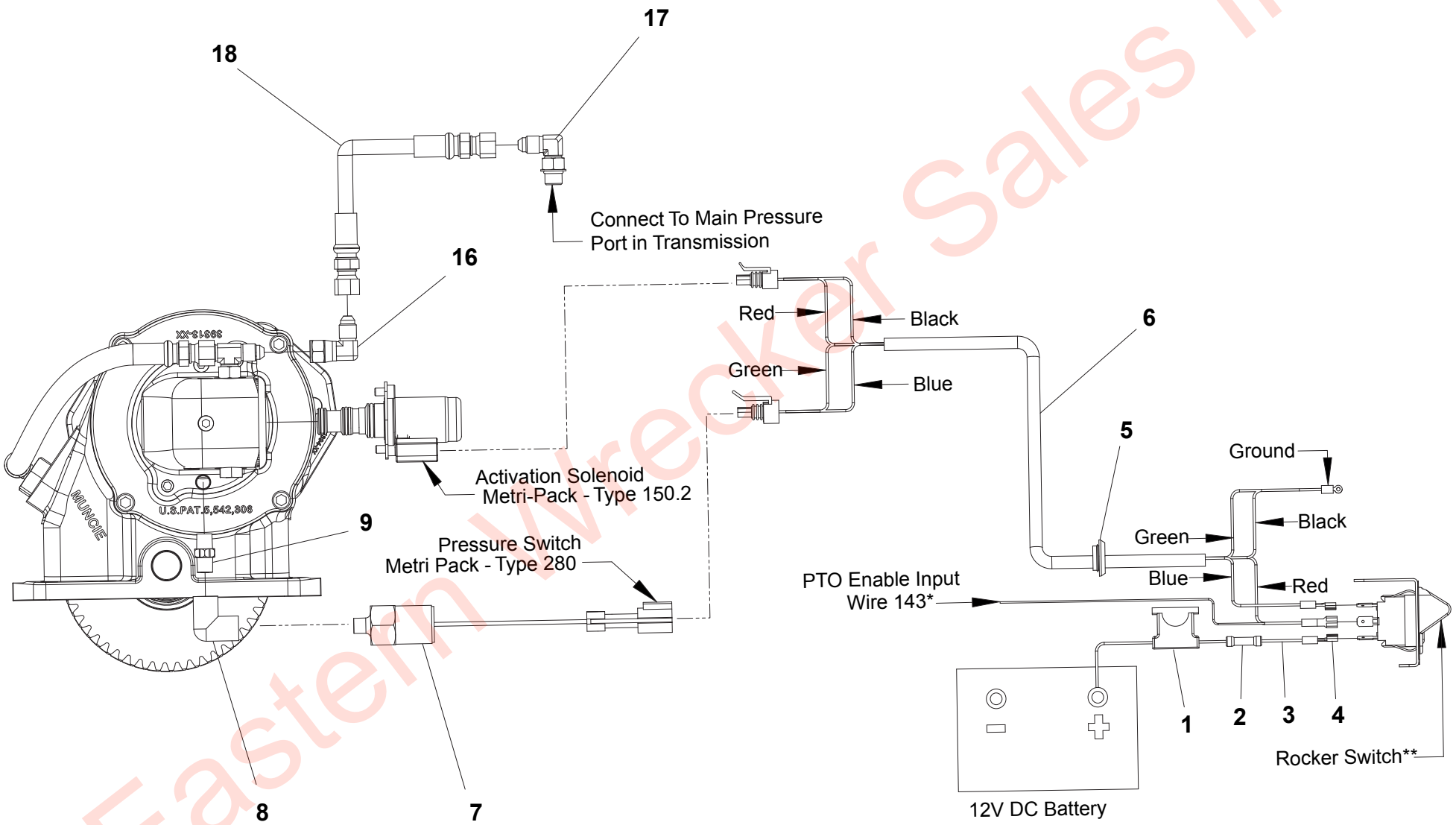

Eastern Wrecker Sales Inc

POWER TAKE OFF - SH SERIES

ITEM	PART NO.	DESCRIPTION	QTY	REV
	NPN	Power Take Off - SH Series	Ref	
1	7590000049	Assembly. - Light 12V	1	
2	70050316	Assembly, Fuse	1	
3	7935000104	Valve, Air	1	
4	7870000062	Switch, Pressure	1	
5	9935740034	Valve, Pressure Protection	1	
6	70050308	Nipple, Pipe	1	
7	70050668	Wiring Pigtail	1	
8	70050310	Fitting	1	
9	70050320	Connector	2	
10	70050309	Connector	1	
11	70050669	Plug	1	
12	70050313	Terminal	2	
13	70050312	Wire	12 ft	
14	70050977	Terminal, Closed End Crimp	3	
15	7565000019	Tubing, Air	1	
16	9443760018	Fitting	1	
17	70050322	Bracket, Dash (Not Shown)	1	
18	7706000004	Plate, Face (Not Shown)	1	
19	70050319	Kit, Bolt (Not Shown)	1	

Eastern Wrecker Sales Inc

POWER TAKE OFF - SH SERIES

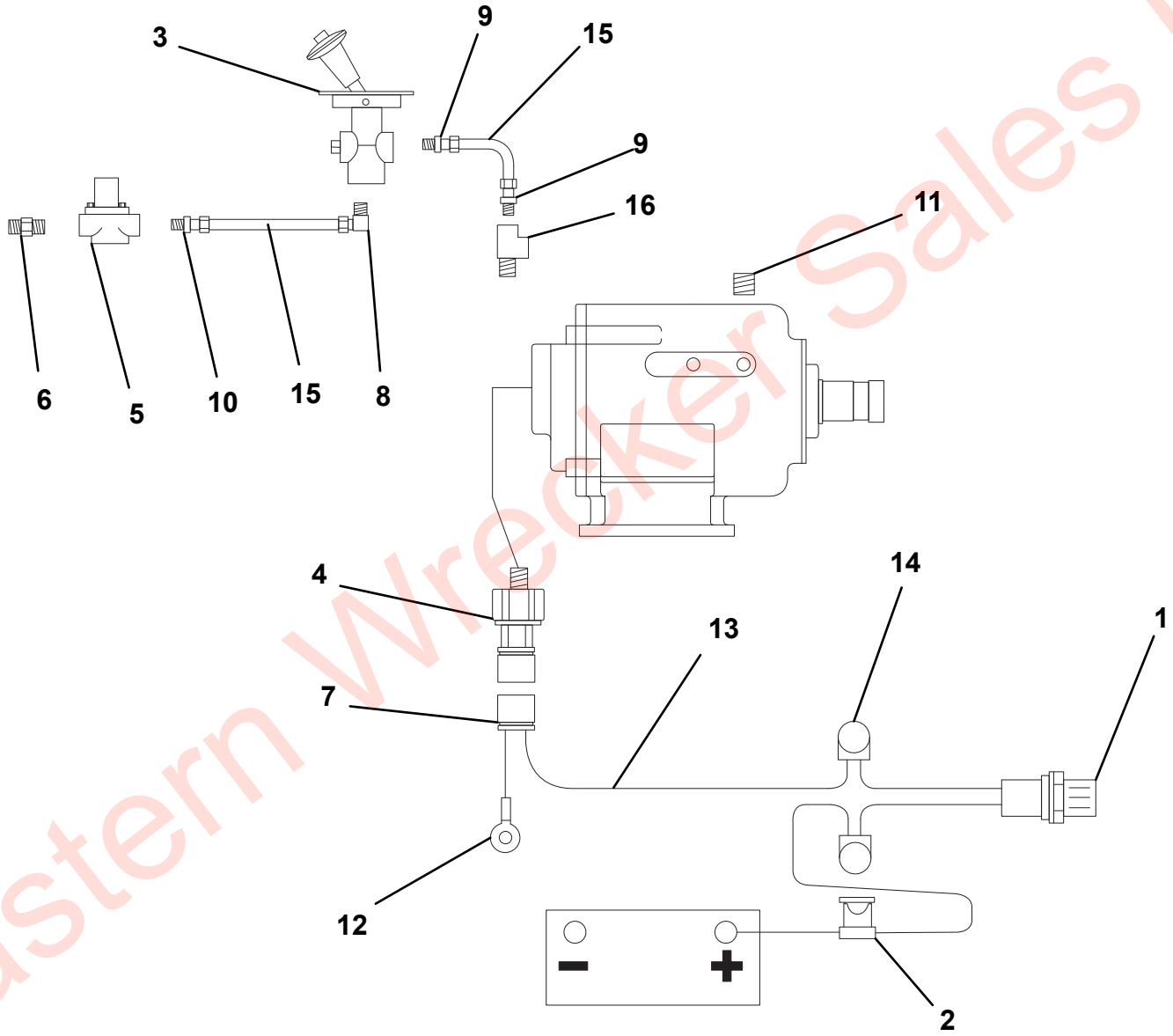

Eastern Wrecker Sales Inc

HYDRAULIC SUPPLY PRESSURE INSTALLATION

ITEM	PART NO.	DESCRIPTION	QTY	REV
	1001147432	Hydraulic Supply Pressure Installation	Ref	C
1	7430000010	Filter	1	
2	7650100137	Nipple	1	
3	7444121050	Reducer	1	
4	7935000116	Ball Valve	1	
5	7444121271	Elbow	A/R	
6	7443000130	Fitting	A/R	
7	7274000028	Clamp	2	
8	8565000026	Hose	19FT	
9	1001145056	Elbow	1	
10	7445121645	Elbow	2	
11	1001204565	Hose	2	
12	7115181050	Capscrew, 0.50"-13NC x 1.25"	2	
13	7950180000	Lockwasher, 0.59" ID	2	
14	4178000248	Bracket	1	
15	7274000076	Clamp	10	
16	7785152420	Screw, 0.31" - 18 x 1.50"	10	
17	7660152601	Locknut 0.31"-18NC	20	
18	7115151050	Capscrew, 0.31"-18NC x 1.25"	10	
19	7950150161	Flatwasher, 0.31" ID	10	
20	4706003844	Plate	10	
21	7274000041	Clamp	20	
22	7274000071	Clamp	10	
23	7115140850	Capscrew, 0.25"-20NC x 1.00"	20	
24	7950140152	Washer, 0.25" ID	20	
25	7660142601	Locknut, 0.25" -20NC	20	
26	7577000213	Flange	1	
27	7443000254	Fitting	1	

Eastern Wrecker Sales Inc

HYDRAULIC SUPPLY PRESSURE INSTALLATION

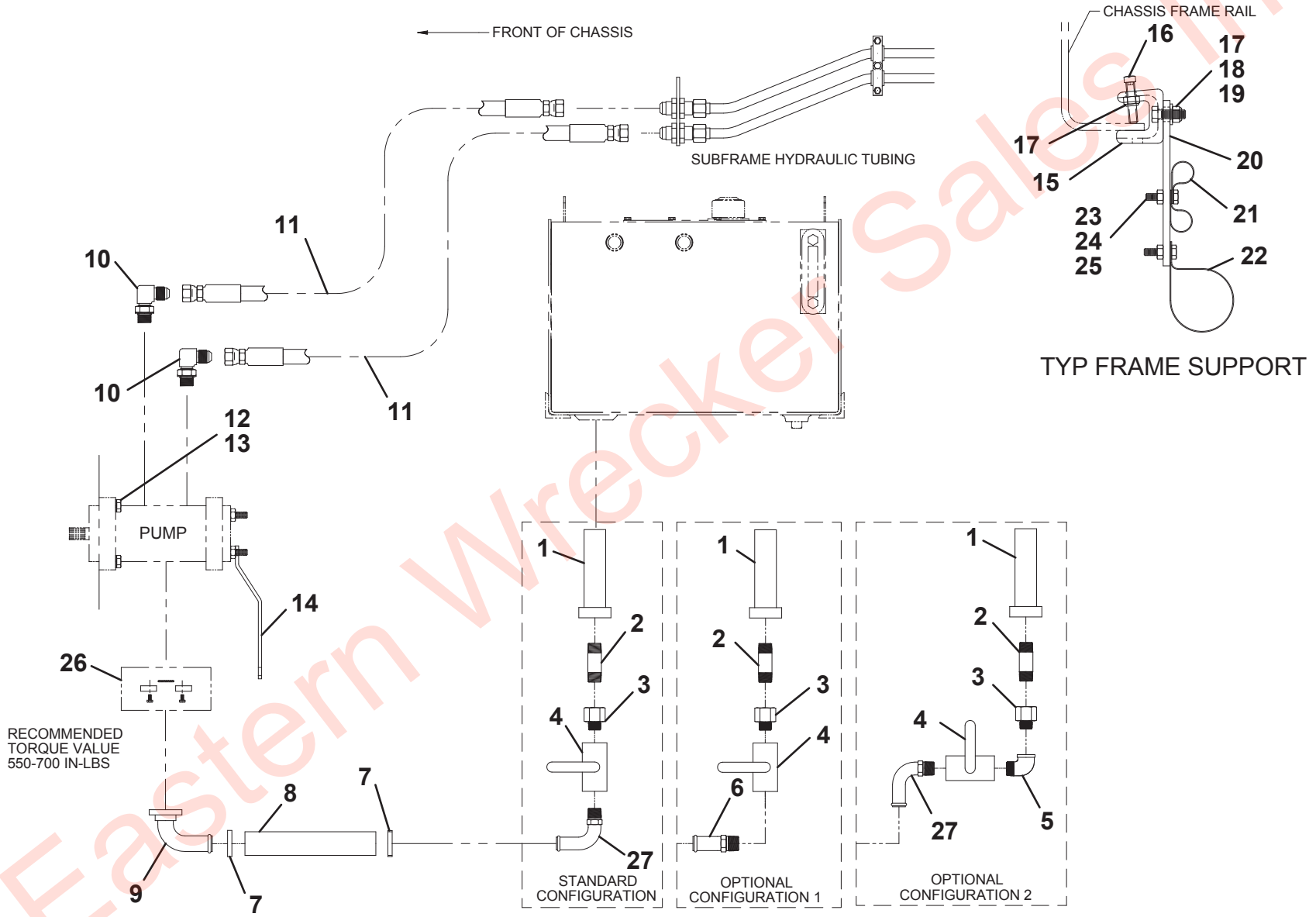

Eastern Wrecker Sales Inc

HYDRAULIC LINES AND FITTINGS - 1001204563

ITEM	PART NO.	DESCRIPTION	QTY	REV
	1001204563	Hydraulic Lines and Fittings	Ref	C
1	2220371	Adapter	13	
2	2220998	Adapter	2	
3	1001210851	Adapter	4	
4	2220473	Adapter	1	
5	2220600	Adapter	2	
6	7445080644	Fitting	2	
7	2220362	Adapter	2	
8	7274000040	Clamp	2	
9	7115141050	Capscrew, 0.25"-20NC X 1.25"	2	
10	7950140161	Flatwasher, 0.25" ID	4	
11	7660142601	Locknut, 0.25" -20NC	2	
12	2230025	Adapter	4	
13	4619000006	Manifold	1	
14	7115161650	Capscrew, 0.38"-16NC X 2.00"	2	
15	7950160000	Lockwasher, 0.38" ID	2	
16	7445100843	Adapter	4	
17	8760268	Adapter	2	
18	2230035	Adapter	4	
19	2221042	Adapter	2	
20	2220682	Adapter	2	
21	1320224	Clamp	2	
22	7445161620	Fitting	2	
23	7430000004	Filter Assembly	2	
24	7443000158	Fitting	2	
25	7470000002	Gauge	2	
26	7445060219	Adapter	1	
27	2220518	Adapter	2	
28	2220415	Adapter	1	
29	1001094694	Adapter	1	
30	7445040421	Fitting	2	
31	7470000004	Gauge	2	
32	7790060676	Capscrew, #6 x 0.38"	2	
		HDUL Hose Kit		
101	4570000138	Hose Assembly	2	
102	4570000301	Hose Assembly	2	
103	1001204597	Hose Assembly	4	
104	1001204601	Hose Assembly	1	
105	1001204639	Hose Assembly	1	
106	1001204706	Hose Assembly	2	
107	4567132019	Hose Assembly	4	
108	1001204809	Hose Assembly	2	
109	1001204822	Hose Assembly	2	
110	1001204875	Hose Assembly	2	
111	1001205217	Hose Assembly	2	
112	1001205230	Hose Assembly	2	
113	4569132019	Hose Assembly	2	
114	4569133020	Hose Assembly	2	
115	4570000271	Hose Assembly	2	
116	4567120017	Hose Assembly	2	
117	4570000260	Hose Assembly	2	
118	4567152052	Hose Assembly	4	
119	1001192423	Hose Assembly	1	
120	1001205671	Hose Assembly	1	
121	1001205677	Hose Assembly	1	
122	1001205678	Hose Assembly	1	
123	1001205679	Hose Assembly	1	
124	4569180022	Hose Assembly	1	
125	4569180026	Hose Assembly	1	
126	4570000329	Hose Assembly	1	
127	4567112025	Hose Assembly	1	
128	4567113031	Hose Assembly	1	
		Winch Hose Kit		
200	1001166531	Hose Assembly	1	
201	4567152018	Hose Assembly	1	
202	1001166532	Hose Assembly	1	
203	1001166533	Hose Assembly	1	
		U/L 530 Hose Kit		
300	4570000336	Hose Assembly	1	
301	4570000335	Hose Assembly	1	
		U/L 565 Hose Kit		
300	4570000177	Hose Assembly	1	
301	4570000176	Hose Assembly	1	
		Drag Winch Hose Kit		
401	1001204803	Hose Assembly	2	
402	4569162027	Hose Assembly	1	
403	4569162030	Hose Assembly	1	

Eastern Wrecker Sales Inc

HYDRAULIC LINES AND FITTINGS - 1001204563

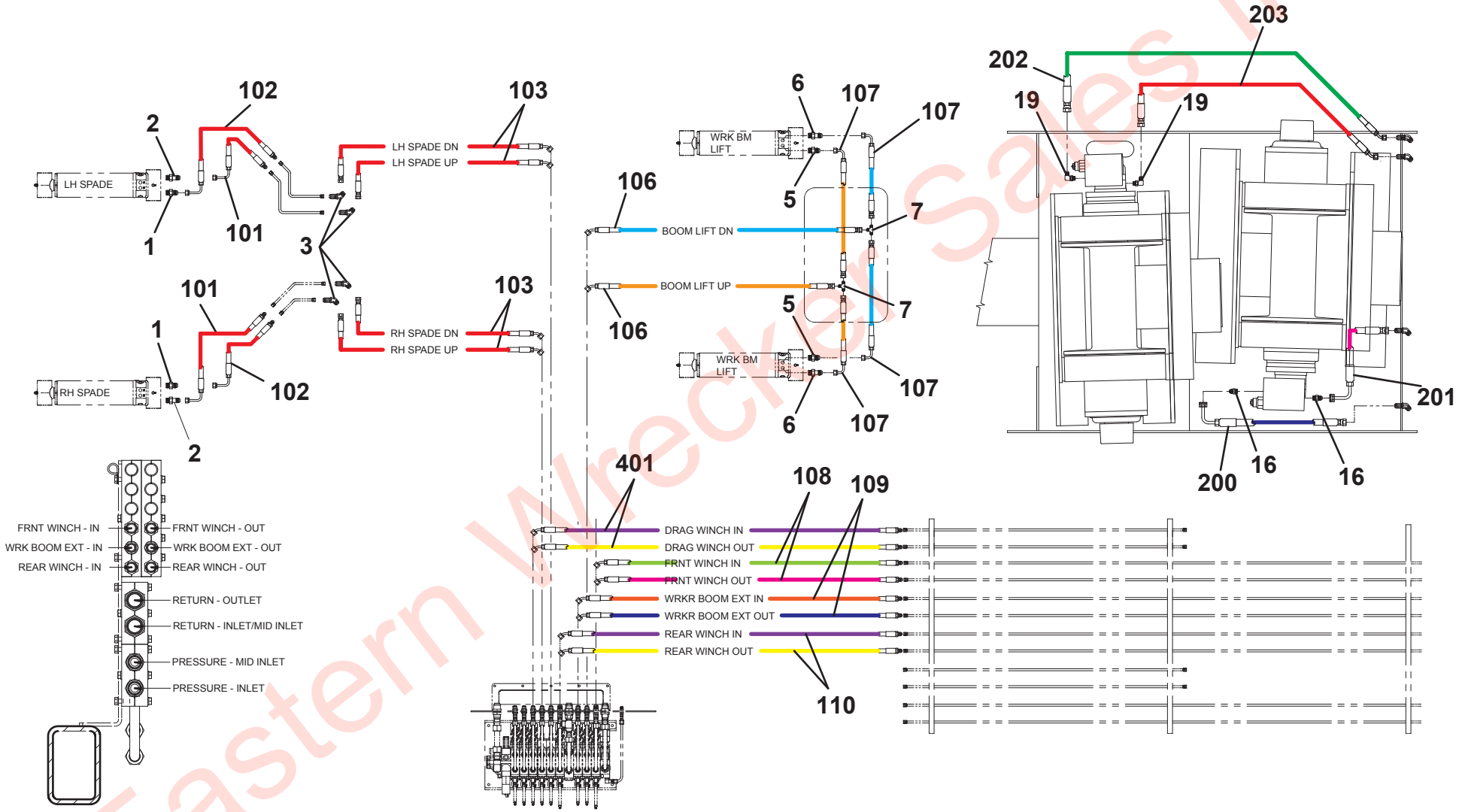

Eastern Wrecker Sales Inc

HDRAULIC LINES AND FITTINGS - 1001204563

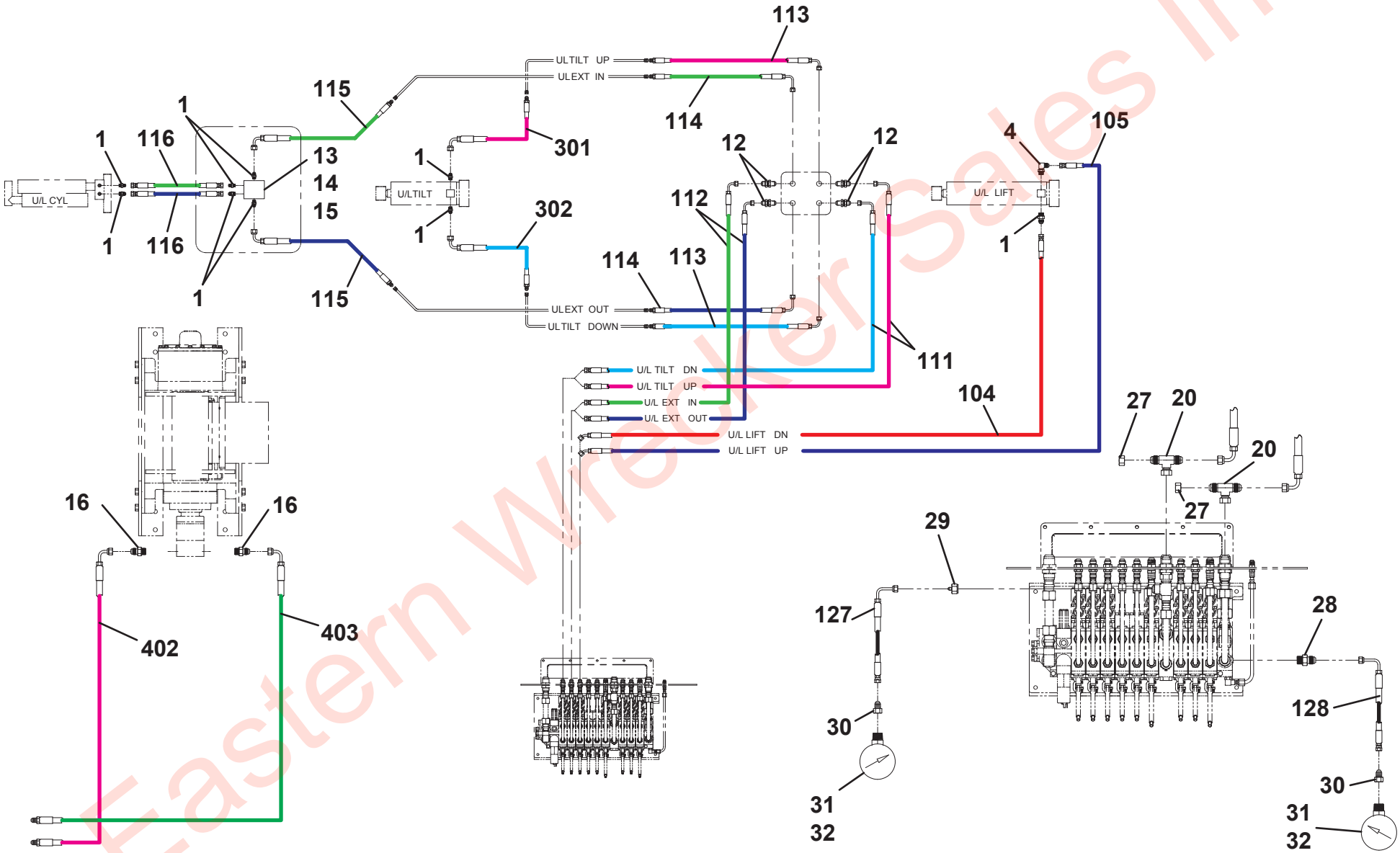

Eastern Wrecker Sales Inc

HDRAULIC LINES AND FITTINGS - 1001204563

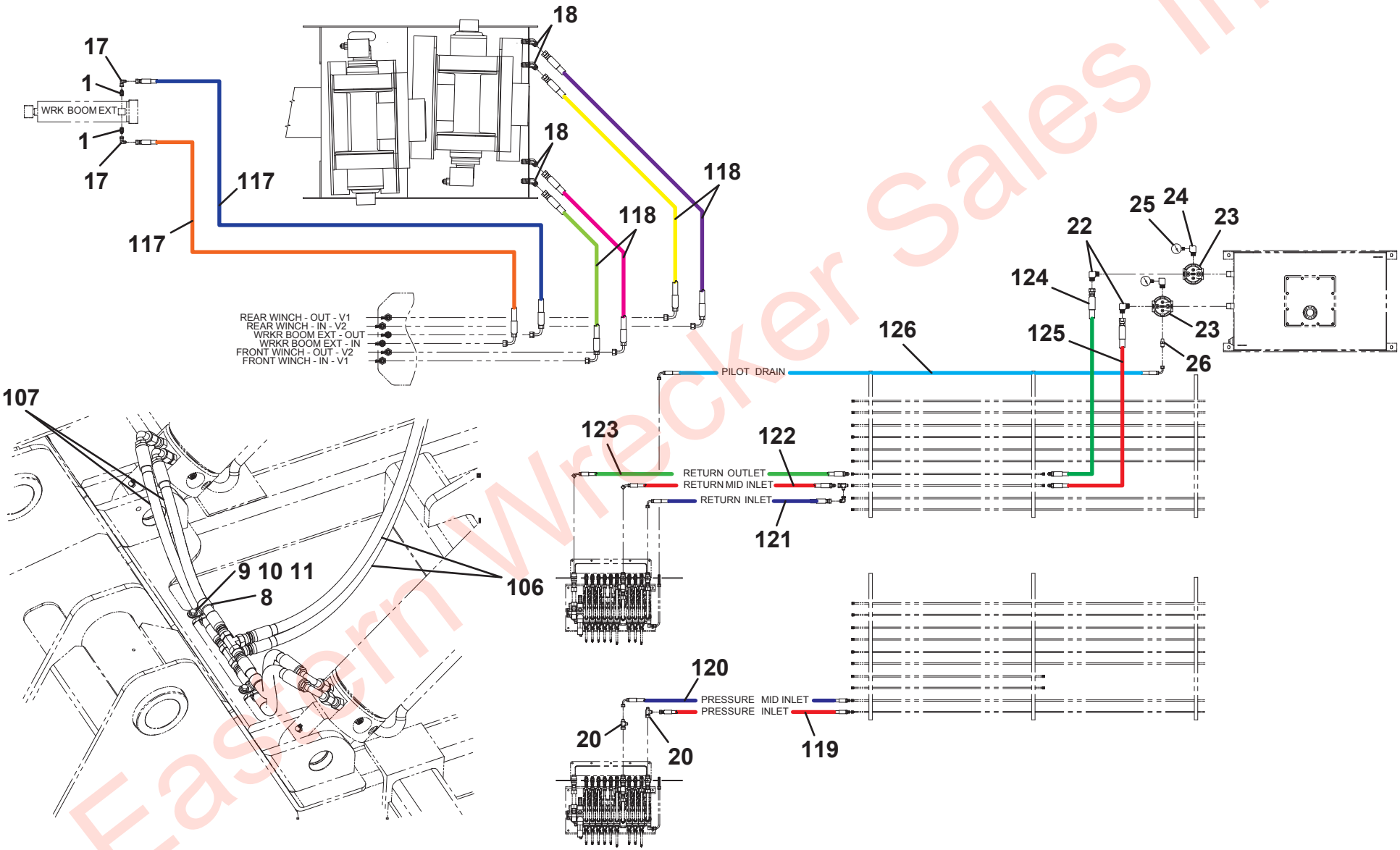

Eastern Wrecker Sales Inc

HYDRAULIC LINES AND FITTINGS - 1001205738

ITEM	PART NO.	DESCRIPTION	QTY	REV
	1001205738	Hydraulic Lines and Fittings	Ref	C
1	2220371	Adapter	13	
2	2220998	Adapter	2	
3	1001210851	Adapter	4	
4	2220473	Adapter	1	
5	2220600	Adapter	2	
6	7445080644	Fitting	2	
7	2220362	Adapter	2	
8	7274000040	Clamp	2	
9	7115141050	Capscrew, 0.25"-20NC X 1.25"	2	
10	7950140161	Flatwasher, 0.25" ID	4	
11	7660142601	Locknut, 0.25" -20NC	2	
12	2230025	Adapter	4	
13	4619000006	Manifold	1	
14	7115161650	Capscrew, 0.38"-16NC X 2.00"	2	
15	7950160000	Lockwasher, 0.38" ID	2	
16	7445100843	Adapter	4	
17	8760268	Adapter	2	
18	2230035	Adapter	4	
19	2221042	Adapter	2	
20	2220682	Adapter	2	
21	1320224	Clamp	2	
22	7445161620	Fitting	2	
23	7430000004	Filter Assembly	2	
24	7443000158	Fitting	2	
25	7470000002	Gauge	2	
26	7445060219	Adapter	1	
27	2220518	Adapter	2	
28	2220415	Adapter	1	
29	1001094694	Adapter	1	
30	7445040421	Fitting	2	
31	7470000004	Gauge	2	
32	7790060676	Capscrew, #6 x 0.38"	2	
		HDUL Hose Kit		
101	4570000138	Hose Assembly	2	
102	4570000301	Hose Assembly	2	
103	1001204597	Hose Assembly	4	
104	1001204601	Hose Assembly	1	
105	1001204639	Hose Assembly	1	
106	1001204706	Hose Assembly	2	
107	4567132019	Hose Assembly	4	
108	1001204809	Hose Assembly	2	
109	1001204822	Hose Assembly	2	
110	1001204875	Hose Assembly	2	
111	1001205217	Hose Assembly	2	
112	1001205230	Hose Assembly	2	
113	4569132019	Hose Assembly	2	
114	4569133020	Hose Assembly	2	
115	4570000271	Hose Assembly	2	
116	4567120017	Hose Assembly	2	
117	4570000260	Hose Assembly	2	
118	4567152052	Hose Assembly	4	
119	1001192423	Hose Assembly	1	
120	1001205671	Hose Assembly	1	
121	1001205677	Hose Assembly	1	
122	1001205678	Hose Assembly	1	
123	1001205679	Hose Assembly	1	
124	4569180022	Hose Assembly	1	
125	4569180026	Hose Assembly	1	
126	4570000329	Hose Assembly	1	
127	4567112025	Hose Assembly	1	
128	4567113031	Hose Assembly	1	
		Winch Hose Kit		
200	1001166531	Hose Assembly	1	
201	4567152018	Hose Assembly	1	
202	1001166532	Hose Assembly	1	
203	1001166533	Hose Assembly	1	
		U/L 530 Hose Kit		
300	4570000336	Hose Assembly	1	
301	4570000335	Hose Assembly	1	
		U/L 565 Hose Kit		
300	4570000177	Hose Assembly	1	
301	4570000176	Hose Assembly	1	

Eastern Wrecker Sales Inc

HYDRAULIC LINES AND FITTINGS - 1001205738

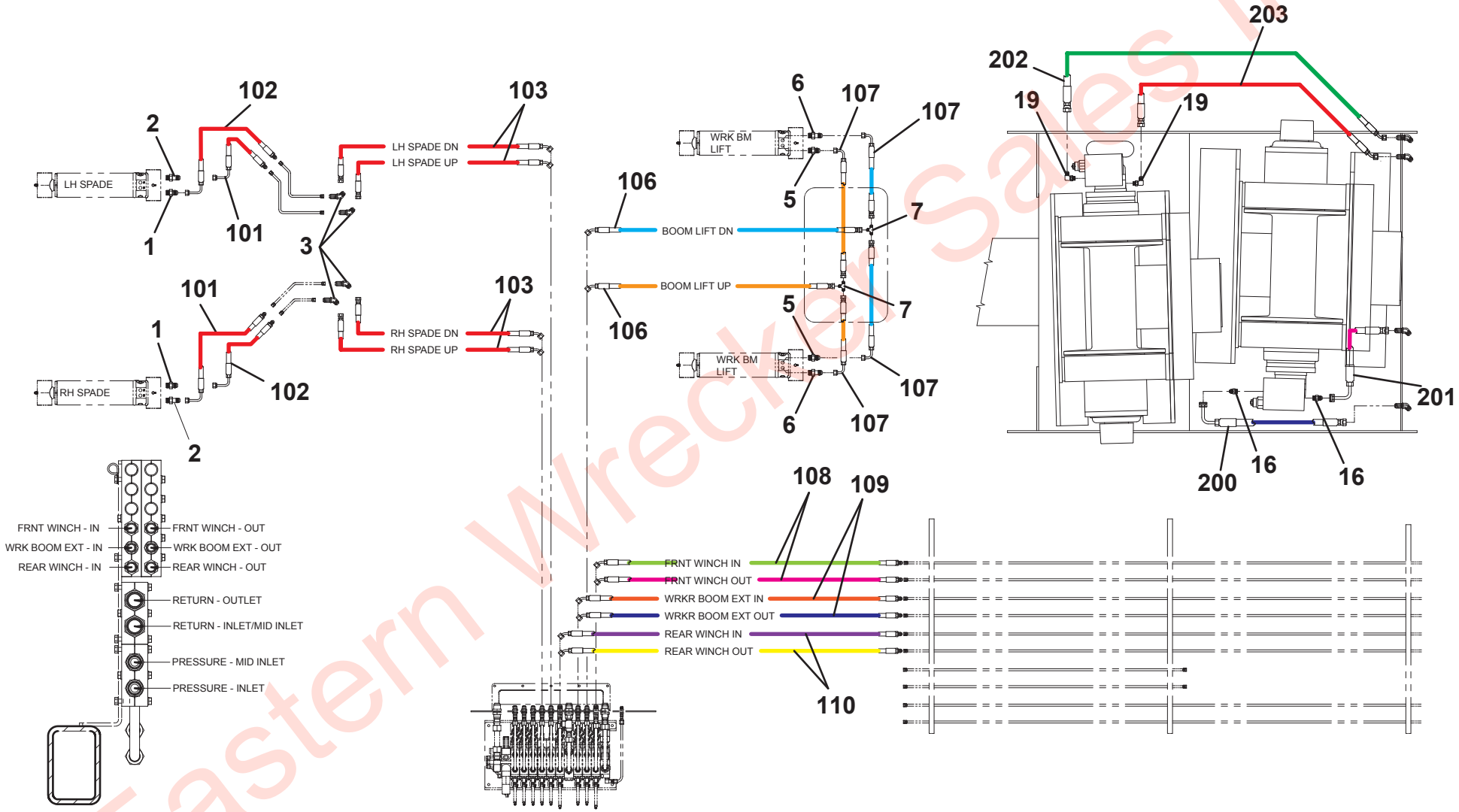

Eastern Wrecker Sales Inc

HDRAULIC LINES AND FITTINGS - 1001205738

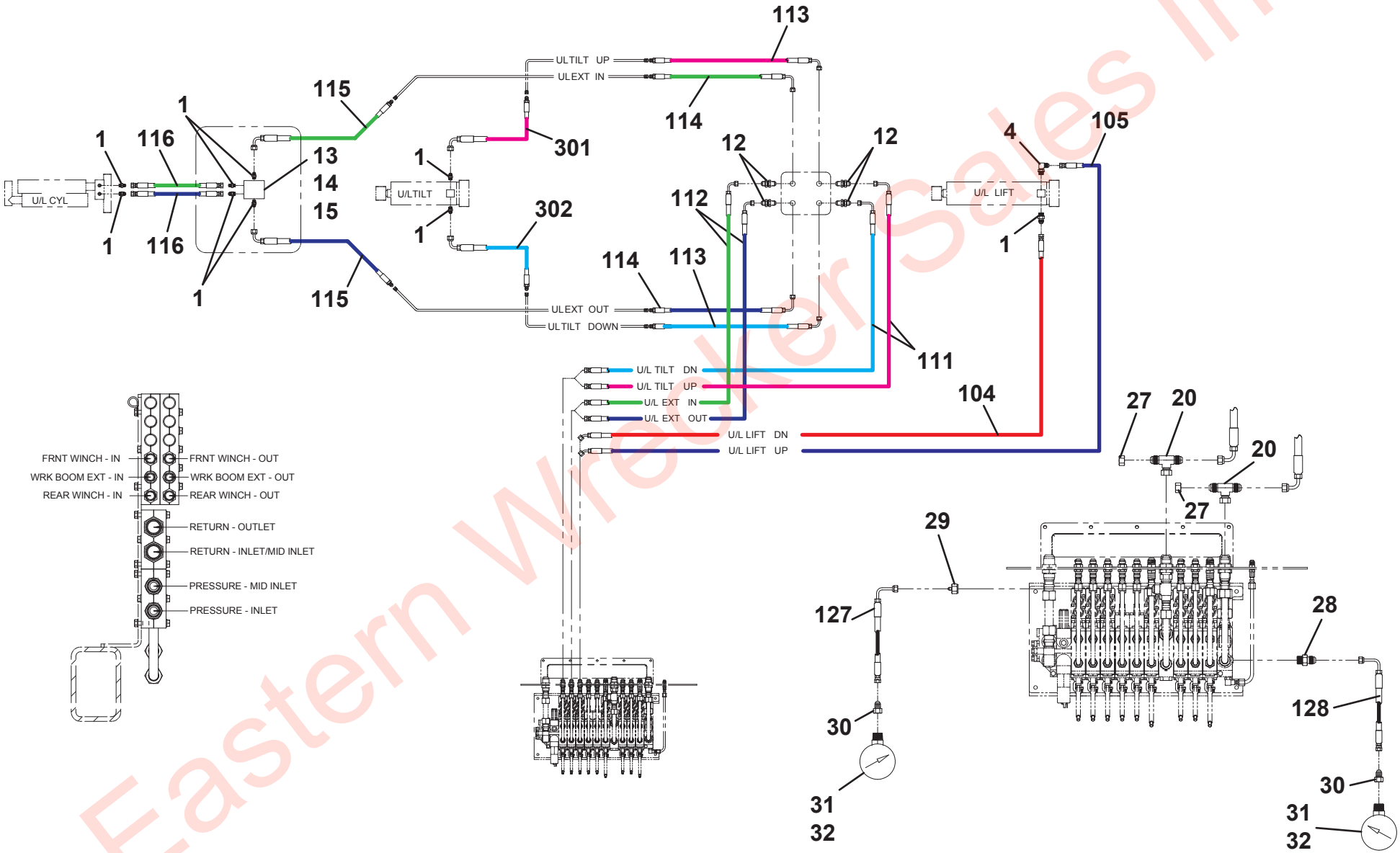

Eastern Wrecker Sales Inc

HDRAULIC LINES AND FITTINGS - 1001205738

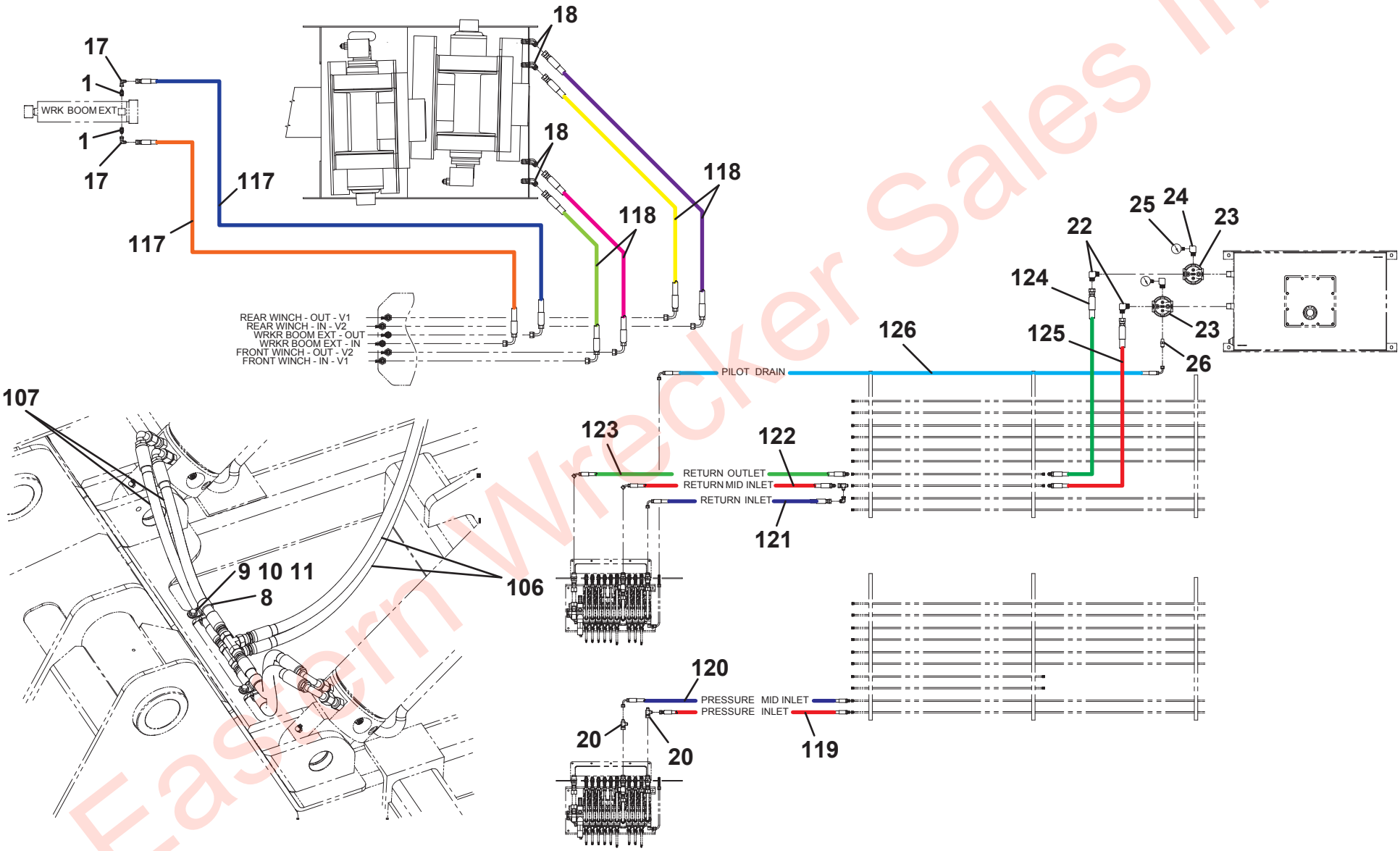

Eastern Wrecker Sales Inc

DRIVER SIDE GAUGE INSTALLATION

ITEM	PART NO.	DESCRIPTION	QTY	REV
	1001220219	Driver Side Gauge Installation	Ref	A
1	7470000004	Gauge Mount	2	
2	7790060676	Screw, #6 x 0.38”	6	
3	7445040421	Fitting	2	
4	1001094694	Reducer	2	
5	2230021	Adapter	2	
6	2220654	Adapter	2	
7	1001193233	Hose Assembly	2	
8	1001193241	Hose Assembly	1	
9	1001193242	Hose Assembly	1	

Eastern Wrecker Sales Inc

DRIVER SIDE GAUGE INSTALLATION

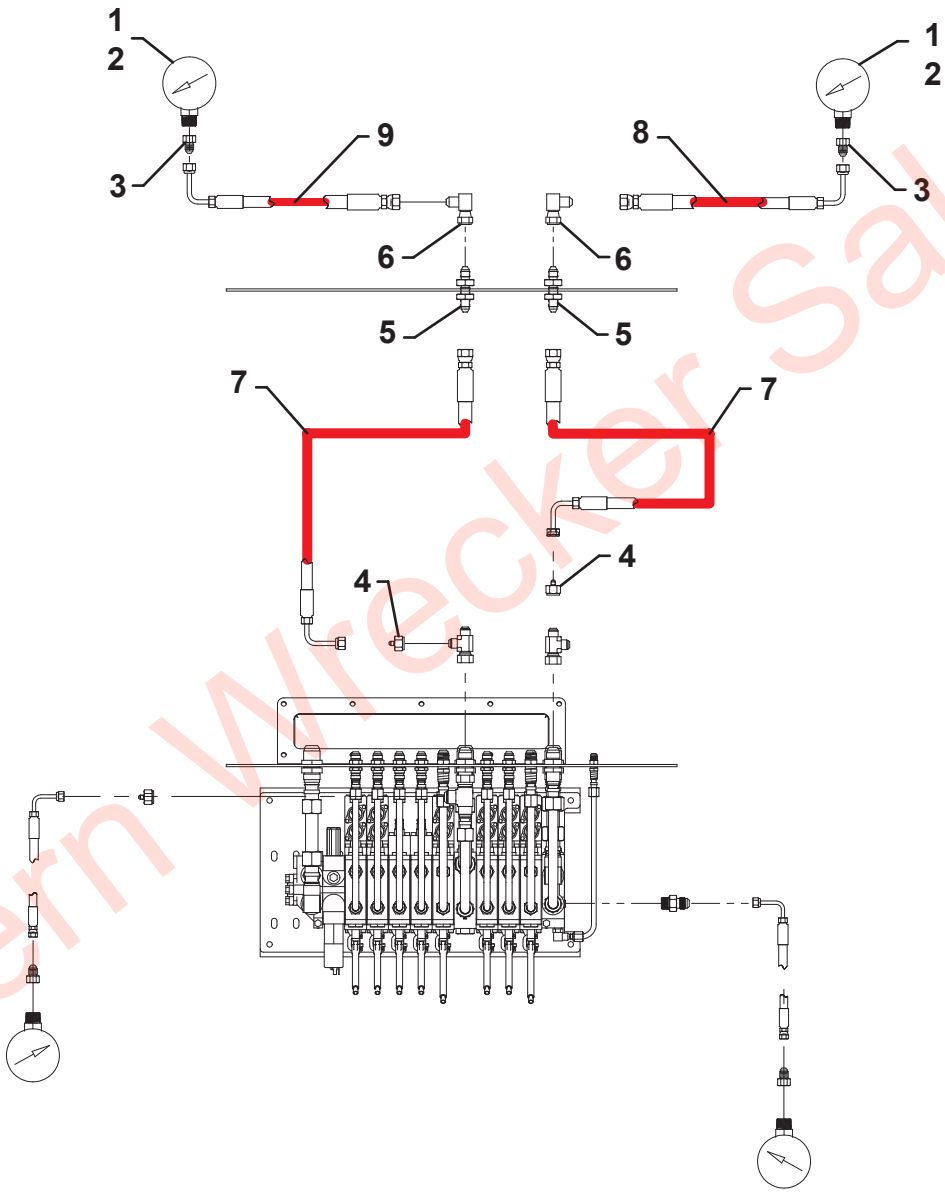

Eastern Wrecker Sales Inc

THIS PAGE INTENTIONALLY LEFT BLANK

Eastern Wrecker Sales Inc

SECTION 7 - ELECTRICAL

Eastern Wrecker Sales Inc

LIGHTBAR - CODE 3 - 1001136990

ITEM	PART NO.	DESCRIPTION	QTY	REV
	1001136990	Lightbar - Code 3	Ref	B
1	9590310197	Lens, Clear Upper Outboard	2	
2	9590310200	Lens, Clear, Lower Outboard	2	
3	9590310203	Lens, Clear Lower Center	2	
4	9590310195	Lens, Clear Upper Center	2	
5	1001126269	3 Light D.O.T. Strip	1	
6	70050164	Worklight, LED	2	
7	1001130702	Module, LED Stop/Tail/Turn	2	
8	70050166	Bracket, Blank	4	
9	9590310206	Module, Bracket	4	
10	9590310205	Module, Led Amber	6	
11	9590310202	Bracket, Mounting	6	
12	70050167	Controller, General	1	
13	70050165	Cable, Jerr-Dan 9 Wire	1	
14	70050980	Harness, Internal Input	1	
15	70050981	Harness, Internal Output	1	

Eastern Wrecker Sales Inc

LIGHTBAR - CODE 3 - 1001136990

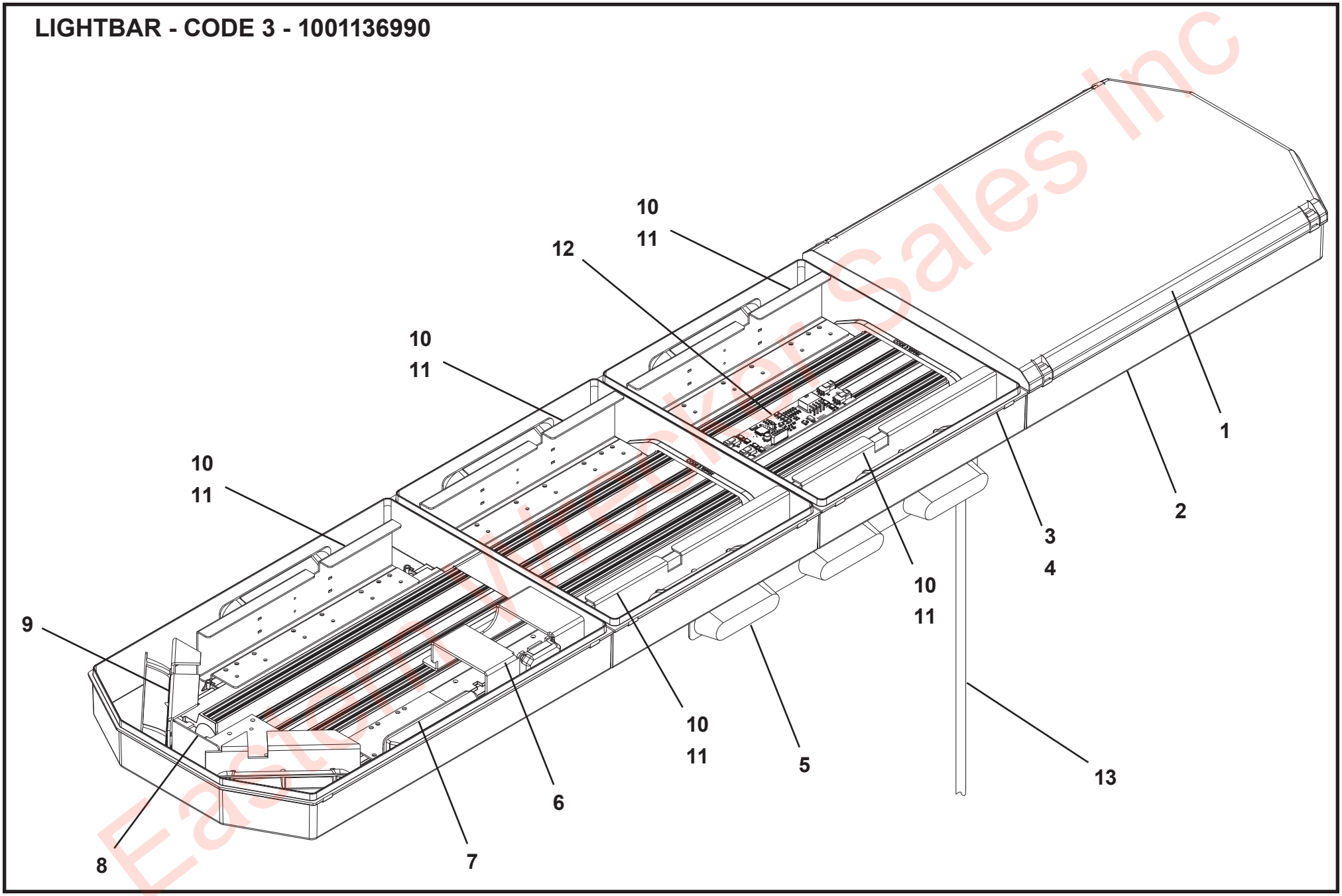

Eastern Wrecker Sales Inc

LIGHTBAR - CODE 3 - 1001152815

ITEM	PART NO.	DESCRIPTION	QTY	REV
	1001152815	Lightbar - Code 3	Ref	A
1	9590310197	Lens, Clear Upper Outboard	2	
2	9590310200	Lens, Clear, Lower Outboard	2	
3	9590310203	Lens, Clear Lower Center	2	
4	9590310195	Lens, Clear Upper Center	2	
5	1001126269	3 Light Strip	1	
6	70050164	Worklight	2	
7	1001130702	Module	2	
8	70050166	Bracket	4	
9	70050979	Bracket	6	
10	70050722	Module	6	
11	9590310202	Bracket	6	
12	70050167	Controller	1	
13	70050165	Cable	1	
14	70050980	Harness	1	
15	70050981	Harness	1	

Eastern Wrecker Sales Inc

LIGHTBAR - CODE 3 - 1001152815

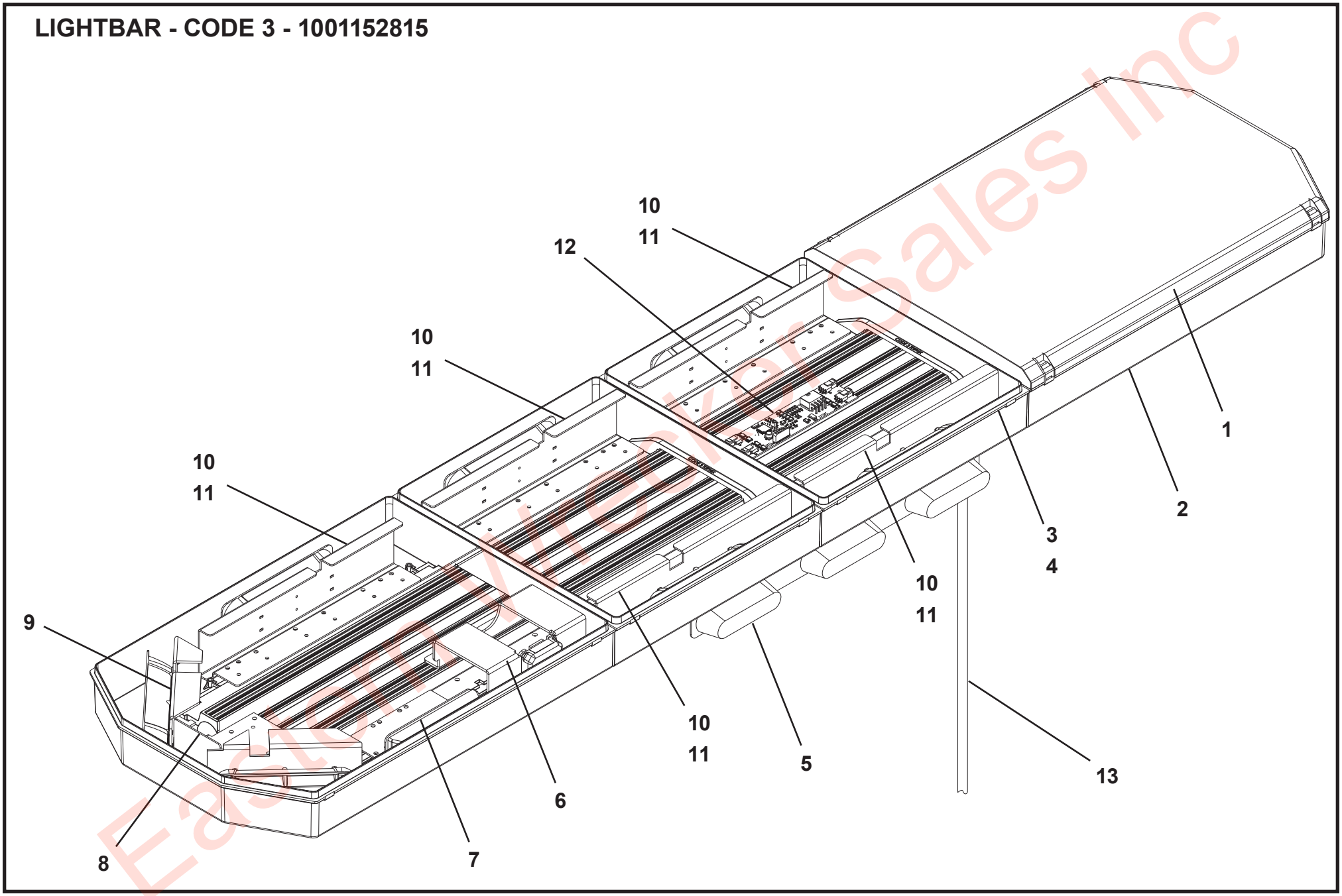

Eastern Wrecker Sales Inc

LIGHTBAR - WHELEN - 1001199475

ITEM	PART NO.	DESCRIPTION	QTY	REV
	1001199475	Lightbar - Whelen	Ref	B
1	70051058	Base	1	
2	70050169	Grommet	1	
3	70050170	Plug	2	
4	70051059	Screw, #10-24NC x 0.88"	1	
5	70051021	Bracket	6	
6	70051022	Bracket	1	
7	70051023	Circuit Board	1	
8	70051060	Cable	1	
9	70050665	Clamp	1	
10	70050174	Nut, #10-24NC	1	
11	70051026	Tiewrap	AR	
12	70051027	Bracket	2	
13	70051035	Bracket	4	
14	70051028	Screw, #6-32NC X 0.50"	10	
15	70051029	Lamp, Rear Amber	2	
16	70051030	Lamp, Front Amber	2	
17	70051063	Lamp, 6 LED	6	
18	70051064	Lamp, 3 LED	2	
19	70051065	Lamp	2	
20	70051066	Bracket	2	
21	70051036	Bracket	8	
22	70051039	Bracket	2	
23	70050176	Grommet	1	
24	70051068	Lamp	1	
25	70050178	Harness	1	
26	70051069	Bracket	2	
27	70050179	Screw, #10-32NF X 0.50"	2	
28	70050180	Lockwasher, #10 ID	2	
29	70050181	Housing	1	
30	70050175	Housing	2	
31	70051070	Harness	1	
32	70051071	Harness	1	
33	70051072	Harness	1	
34	70051073	Harness	1	
35	70051074	Harness	1	
36	70051075	Harness	1	
37	70051044	Bracket	20	
38	70051045	Tiewrap	AR	
39	70051076	Lens	1	
40	70051077	Lens	1	
41	70051078	Label	1	
42	70050203	Screw, #10-24NC X 1.25"	4	
43	70051062	Cover	2	
44	70051061	Cover	1	
45	70051048	Seal	4	
46	70051049	Lens	2	
47	70051053	Screw, #10 X 0.88"	12	
48	70050204	Adapter	2	
49	70051055	Label	1	
50	70050207	Label	1	
51	70051056	Label	2	
52	70051057	Label	1	
53	70050208	Housing	1	
54	70050209	Connector	1	
55	70050210	Housing	1	
56	70050211	Housing	1	

Eastern Wrecker Sales Inc

LIGHTBAR - WHELEN - 1001199475

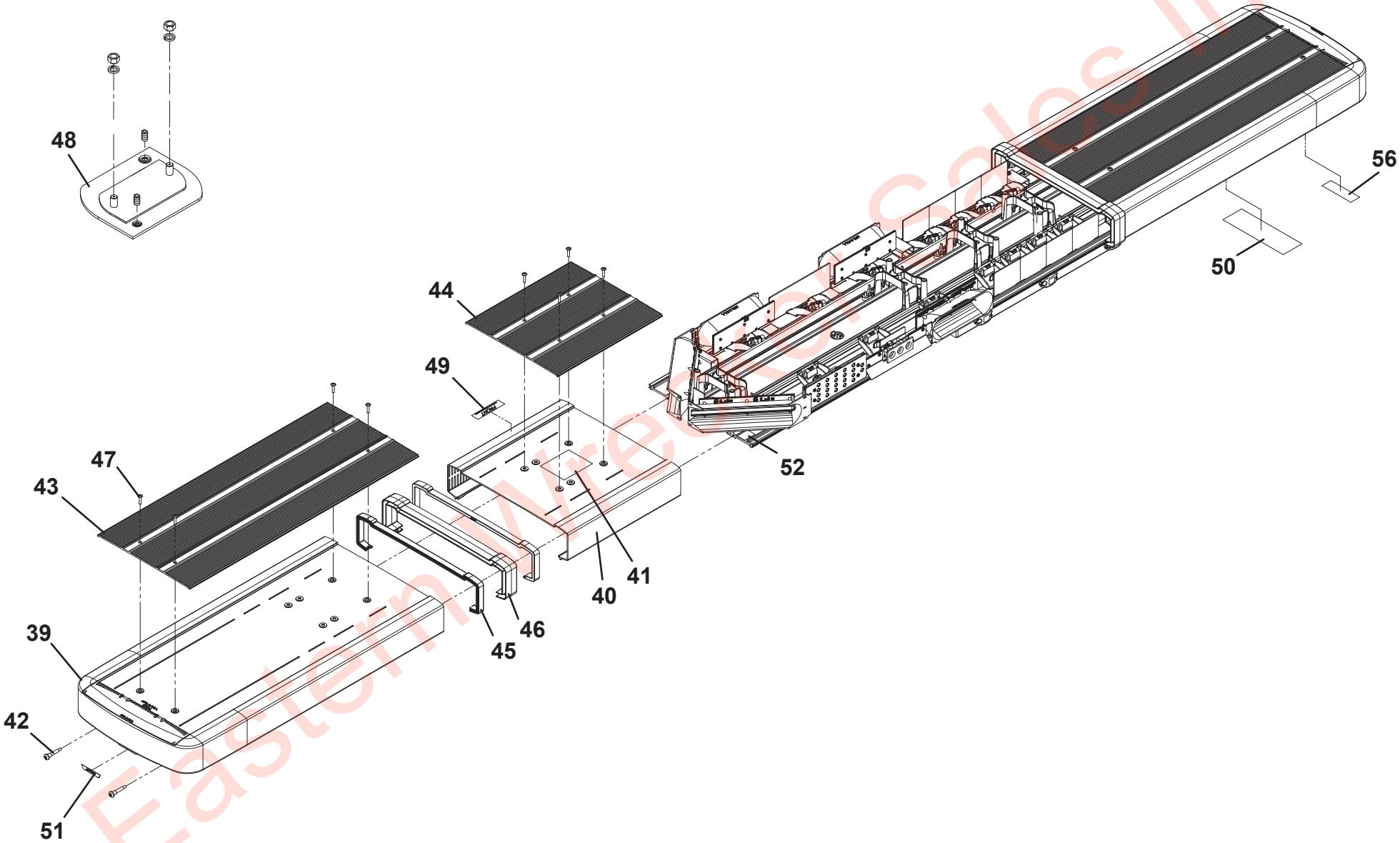

Eastern Wrecker Sales Inc

LIGHTBAR - WHELEN - 1001199475

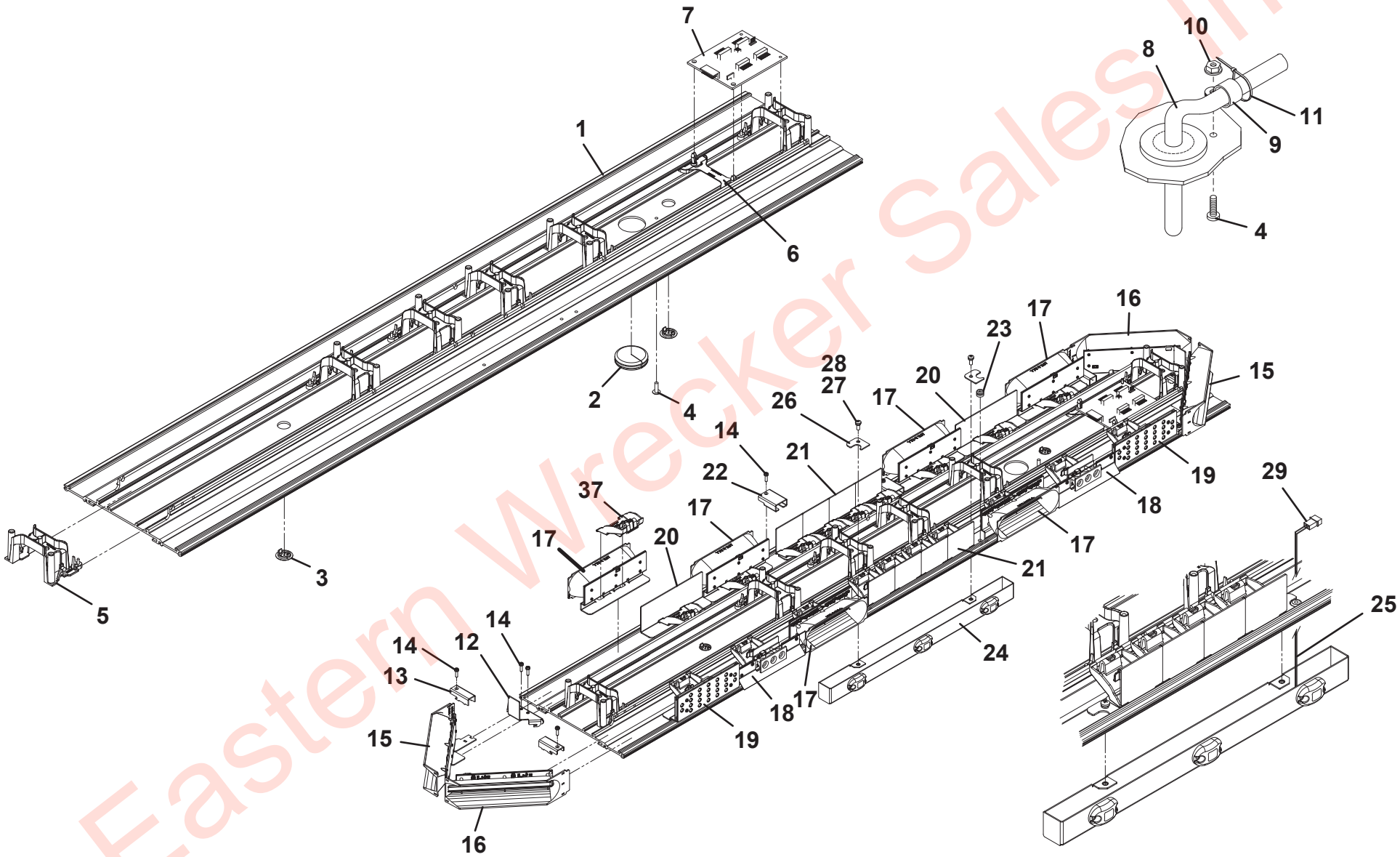

Eastern Wrecker Sales Inc

LIGHTBAR - WHELEN - 1001199475

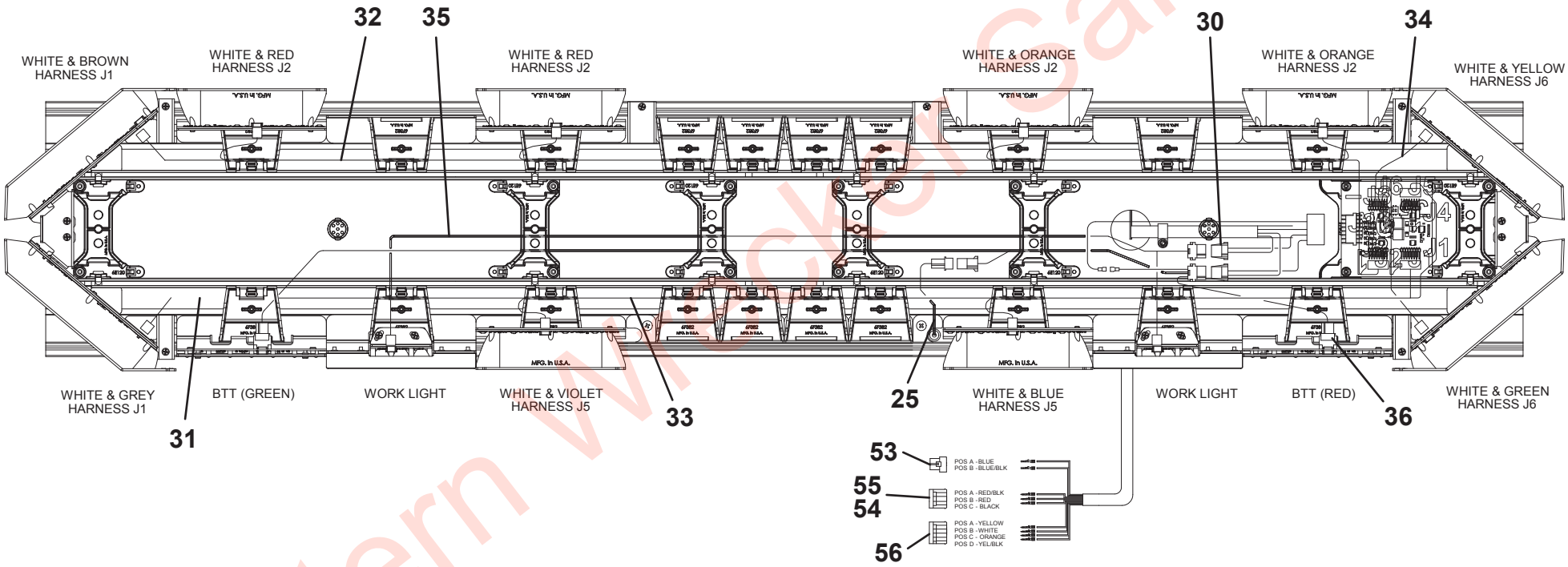

Eastern Wrecker Sales Inc

ELECTRICAL INSTALLATION - TANDEM AXLE

ITEM	PART NO.	DESCRIPTION	QTY	REV
	1001216178	Electrical Installation - Tandem Axle	Ref	C
1	641412	Capscrew, 0.25”-20 X 1.50”	2	
2	641506	Capscrew, 0.31”-18 X 0.75”	1	
3	750604	Screw	8	
4	5526000553	Tie Strap	25	
5	3760308	Retaining Ring	4	
6	4711400	Washer, 0.25” ID	4	
7	4751500	Washer, 0.31” ID	1	
8	4761500	Washer, 0.31” ID	1	
9	1001122235	Bracket	4	
10	1001167452	Decal	2	
11	1001166930	Latch	4	
12	1001166974	Washer, 0.38” ID	14	
13	1001189295	Harness	1	
14	1001167607	Grommet	2	
15	1001168320	Terminal	1	
16	1001168321	Terminal	1	
17	1001168322	Terminal	2	
18	1001168993	Capscrew, 0.38”-16 X 1.50”	14	
19	1001174680	Lamp	2	
20	1001174681	Lamp	4	
21	1001191552	Panel	1	
22	1001191602	Panel	1	
23	1001195257	Screw, 0.25” X 0.50”	73	
24	1001196552	Screw, #8 X 0.75”	24	
25	1001197483	Washer	8	
26	7114100618	Screw, #10-24 X 0.75”	8	
27	7120000035	Capscrew, 0.31"-18NC X 0.50"	1	
28	7178000025	License Plate Bracket	1	
29	7280000006	Clip	73	
30	7345242202	Terminal	2	
31	7346000045	Tubing	0.25	
32	7457000006	Fuse	2	
33	7457000011	Fuse	3	
34	7457000012	Fuse	2	
35	7457000019	Fues	10	
36	7457000023	Fuse	3	
37	1001220431	Grommet	4	
38	7493000026	Grommet	6	
39	7590000105	Light, License Plate	1	
40	7590000343	Light, 2.50” Dia	4	
41	7660102601	Nut, #10-24NC	8	
42	7660142600	Locknut, 0.25"-20NC	2	
43	7660162601	Locknut, 0.38"-16NC	14	
44	7661000023	Locknut, #10-32NF	18	
45	7740000001	Relay	12	
46	1001189287	Harness	1	
47	7870000043	Breaker	1	
48	7870000123	Power Distribution Panel	1	
49	7870000143	Switch	2	
50	7949000053	Washer	1	
51	7950160143	Flatwasher, 0.38" ID	28	
52	7978000011	Cable	25FT	
53	8597650001	Loom	25FT	
54	1001125479	Terminal	2	
55	1001189284	Harness	1	
56	1001162928	Harness	1	
57	1001168323	Cable	1	
58	1001168325	Cable	1	
59	1001168326	Cable	2	
60	1001168328	Cable	1	
61	1001188923	Harness	2	
62	1001188924	Harness	2	
63	1001188949	Harness	2	
64	1001188961	Harness	1	
65	1001188962	Harness	1	
66	1001201384	Socket	1	
67	1001144012	Harness	2	
68	7701000067	Plug	2	

Eastern Wrecker Sales Inc

ELECTRICAL INSTALLATION - TANDEM AXLE

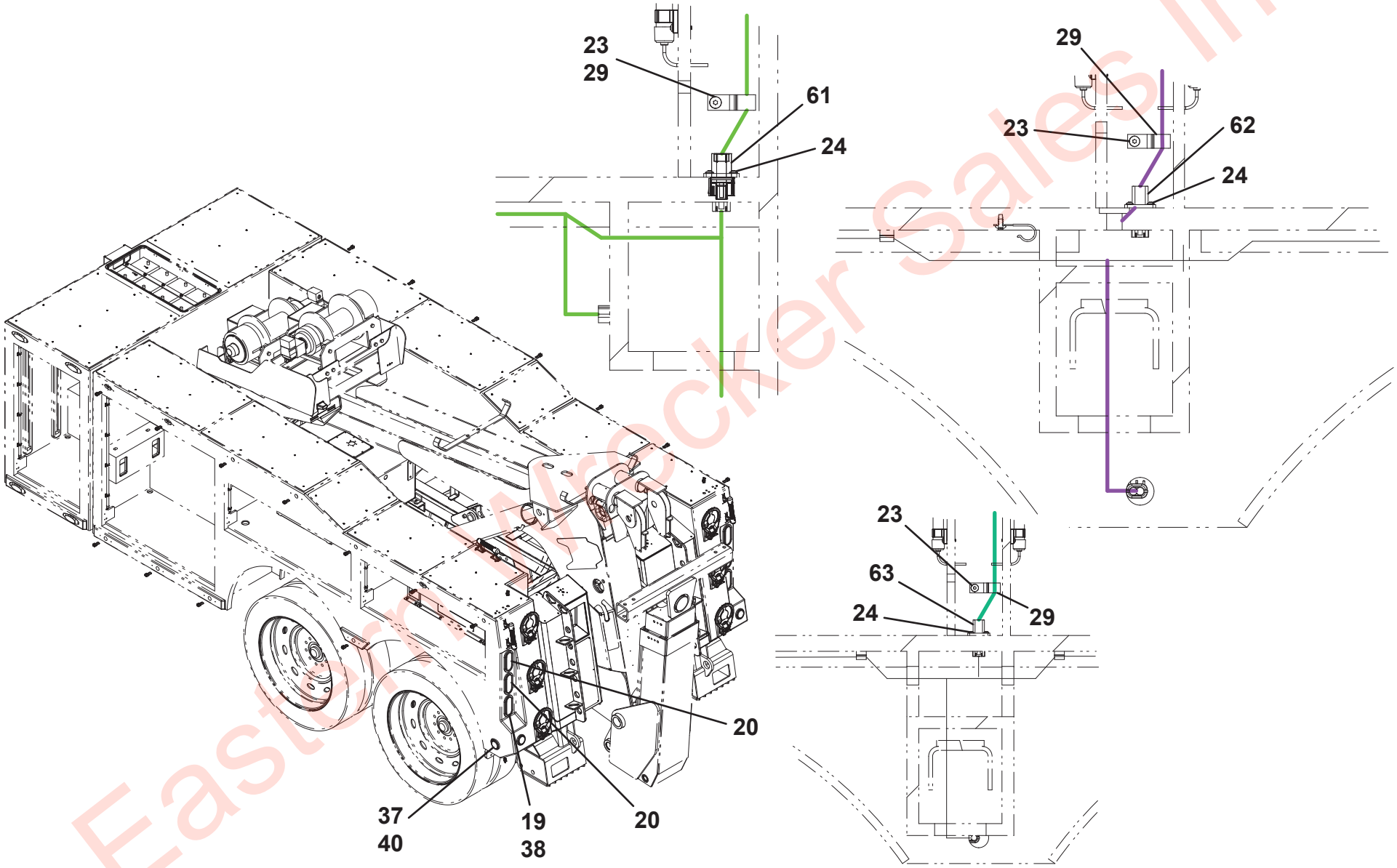

Eastern Wrecker Sales Inc

ELECTRICAL INSTALLATION - TANDEM AXLE

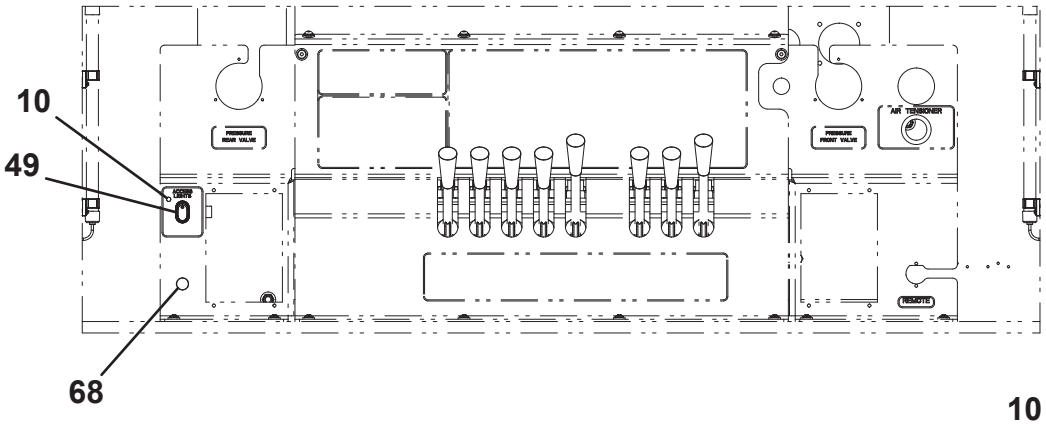

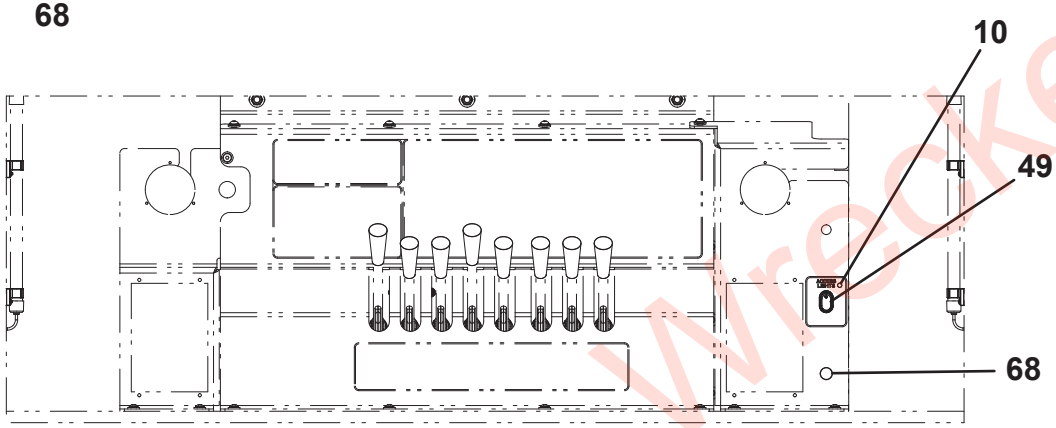

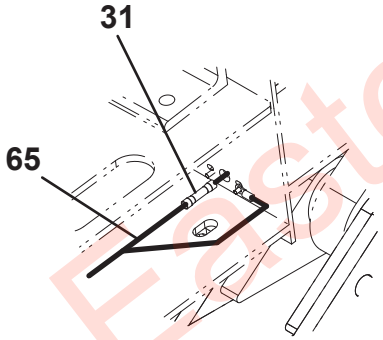

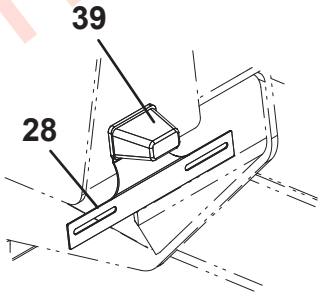

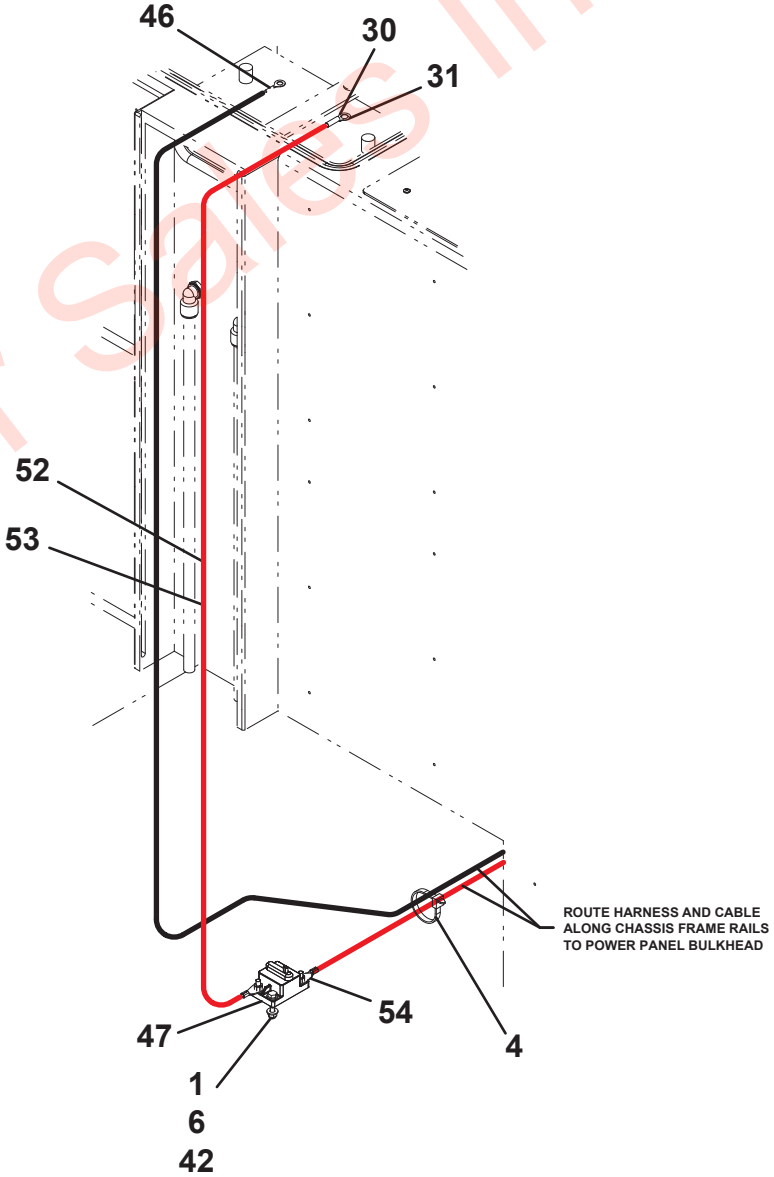

Eastern Wrecker Sales Inc

ELECTRICAL INSTALLATION - TANDEM AXLE

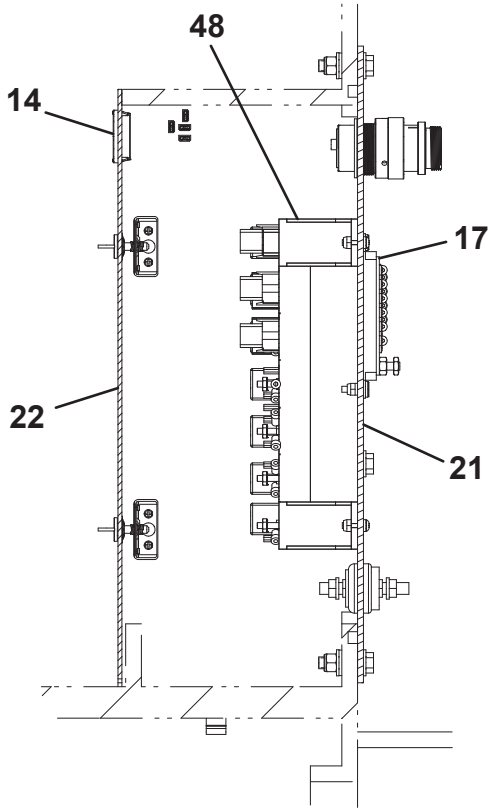

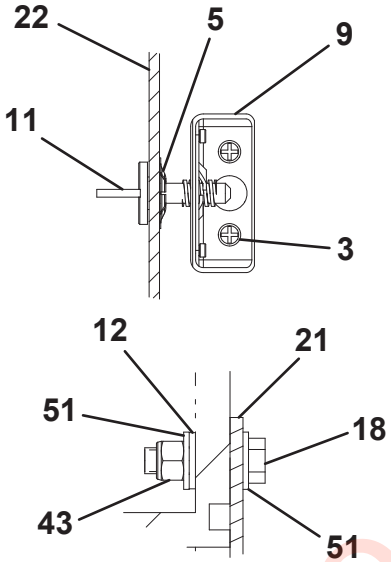

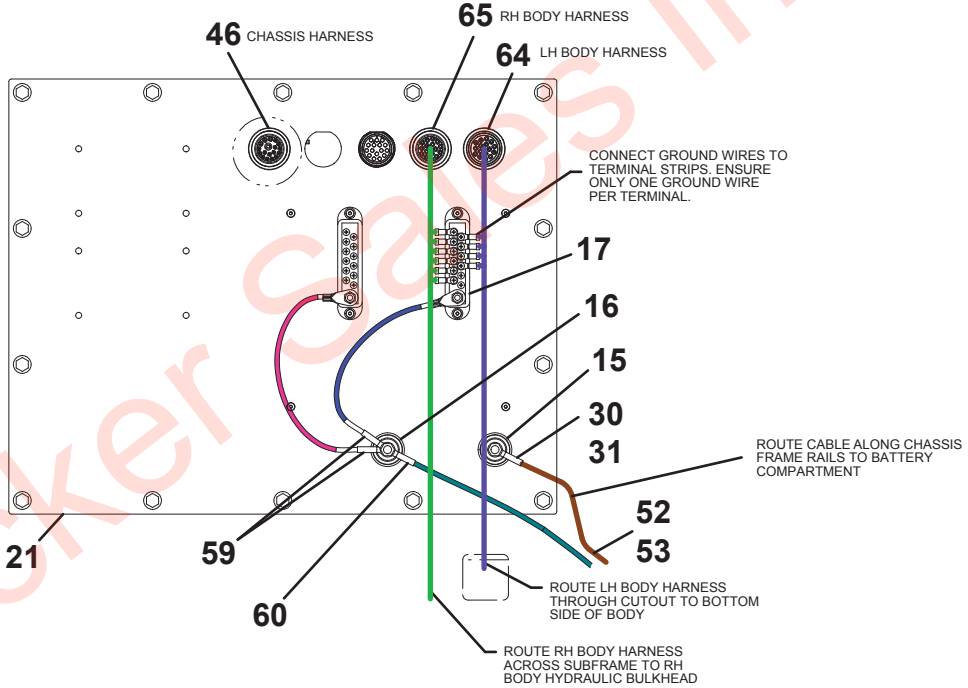

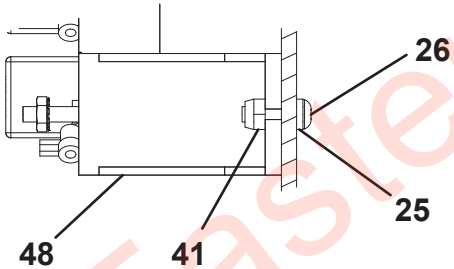

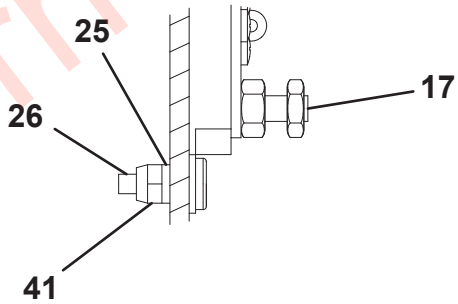

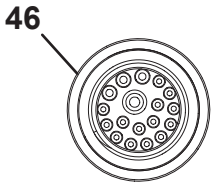

CHASSIS WIRING TO POWER PANEL			
CAVITY	CIRCUIT	GAUGE	FUNCTION
1			PLUGGED
2			PLUGGED
3			PLUGGED
4			PLUGGED
5			PLUGGED
6	22A	10	FLASHER POWER FROM BATT
7			PLUGGED
8			PLUGGED
9	11	FROM CHASSIS	IGN HOT
10	12	FROM CHASSIS	RH S/T
11	13	FROM CHASSIS	LH S/T
12	14	FROM CHASSIS	MARKER
13	15	FROM CHASSIS	BACK-UP
14			PLUGGED
15			PLUGGED
16			PLUGGED
17			PLUGGED
18			PLUGGED

Eastern Wrecker Sales Inc

ELECTRICAL INSTALLATION - TANDEM AXLE

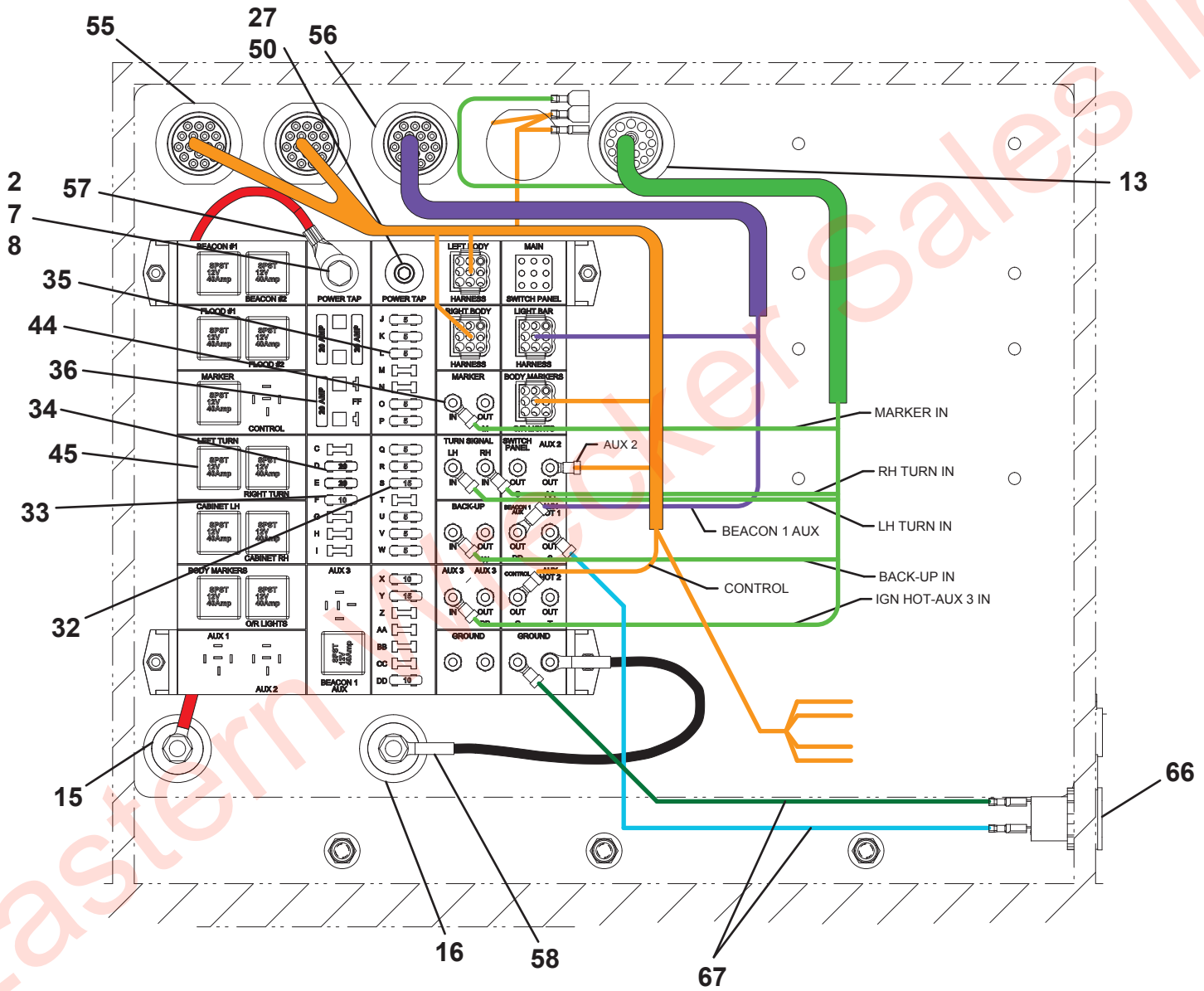

Eastern Wrecker Sales Inc

THIS PAGE INTENTIONALLY LEFT BLANK

Eastern Wrecker Sales Inc

ELECTRICAL INSTALLATION - TRI-AXLE

ITEM	PART NO.	DESCRIPTION	QTY	REV
	1001216179	Electrical Installation - Tri-Axle	Ref	C
1	641412	Capscrew, 0.25”-20 X 1.50”	2	
2	641506	Capscrew, 0.31”-18 X 0.75”	1	
3	750604	Screw	8	
4	5526000553	Tie Strap	25	
5	3760308	Retainer	4	
6	4711400	Washer, 0.25” ID	4	
7	4751500	Washer, 0.31” ID	1	
8	4761500	Washer, 0.31” ID	1	
9	1001122235	Bracket	4	
10	1001167452	Decal	2	
11	1001166930	Latch	4	
12	1001166974	Washer, 0.38” ID	14	
13	1001189295	Harness	1	
14	1001167607	Plug	2	
15	1001168320	Terminal	1	
16	1001168321	Terminal	1	
17	1001168322	Terminal	2	
18	1001168993	Capscrew, 0.38”-16 X 1.50”	14	
19	1001174680	Lamp	2	
20	1001174681	Lamp	4	
21	1001191552	Panel	1	
22	1001191602	Panel	1	
23	1001195257	Screw, 0.25” X 0.50”	73	
24	1001196552	Screw, #8 X 0.75”	24	
25	1001197483	Washer	8	
26	7114100618	Screw, #10-24 X 0.75”	8	
27	7120000035	Capscrew, 0.31"-18NC X 0.50"	1	
28	7178000025	License Plate Bracket	1	
29	7280000006	Clip	73	
30	7345242202	Terminal	2	
31	7346000045	Tubing	0.25	
32	7457000006	Fuse	2	
33	7457000011	Fuse	3	
34	7457000012	Fuse	2	
35	7457000019	Fuse	10	
36	7457000023	Fuse	3	
37	1001220431	Grommet	4	
38	7493000026	Grommet	6	
39	7590000105	Light, License Plate	1	
40	7590000343	Light, 2.50” Dia	4	
41	7660102601	Nut, #10-24NC	8	
42	7660142600	Locknut, 0.25"-20NC	2	
43	7660162601	Locknut, 0.38"-16NC	14	
44	7661000023	Locknut, #10-32NF	18	
45	7740000001	Relay	12	
46	1001189287	Harness	1	
47	7870000043	Breaker Switch	1	
48	7870000123	Power Distribution Panel	1	
49	7870000143	Switch,	2	
50	7949000053	Washer	1	
51	7950160143	Flatwasher, 0.38” ID	28	
52	7978000011	Cable Jacket	25FT	
53	8597650001	Loom	25FT	
54	1001125479	Terminal	2	
55	1001189284	Harness	1	
56	1001162928	Harness	1	
57	1001168323	Cable	1	
58	1001168325	Cable	1	
59	1001168326	Cable	2	
60	1001168328	Cable	1	
61	1001189043	Harness	2	
62	1001189044	Harness	2	
63	1001188949	Harness	2	
64	1001189041	Harness	1	
65	1001189042	Harness	1	
66	1001201384	Socket	1	
67	1001144012	Harness	2	
68	7701000067	Plug	2	

Eastern Wrecker Sales Inc

ELECTRICAL INSTALLATION - TRI-AXLE

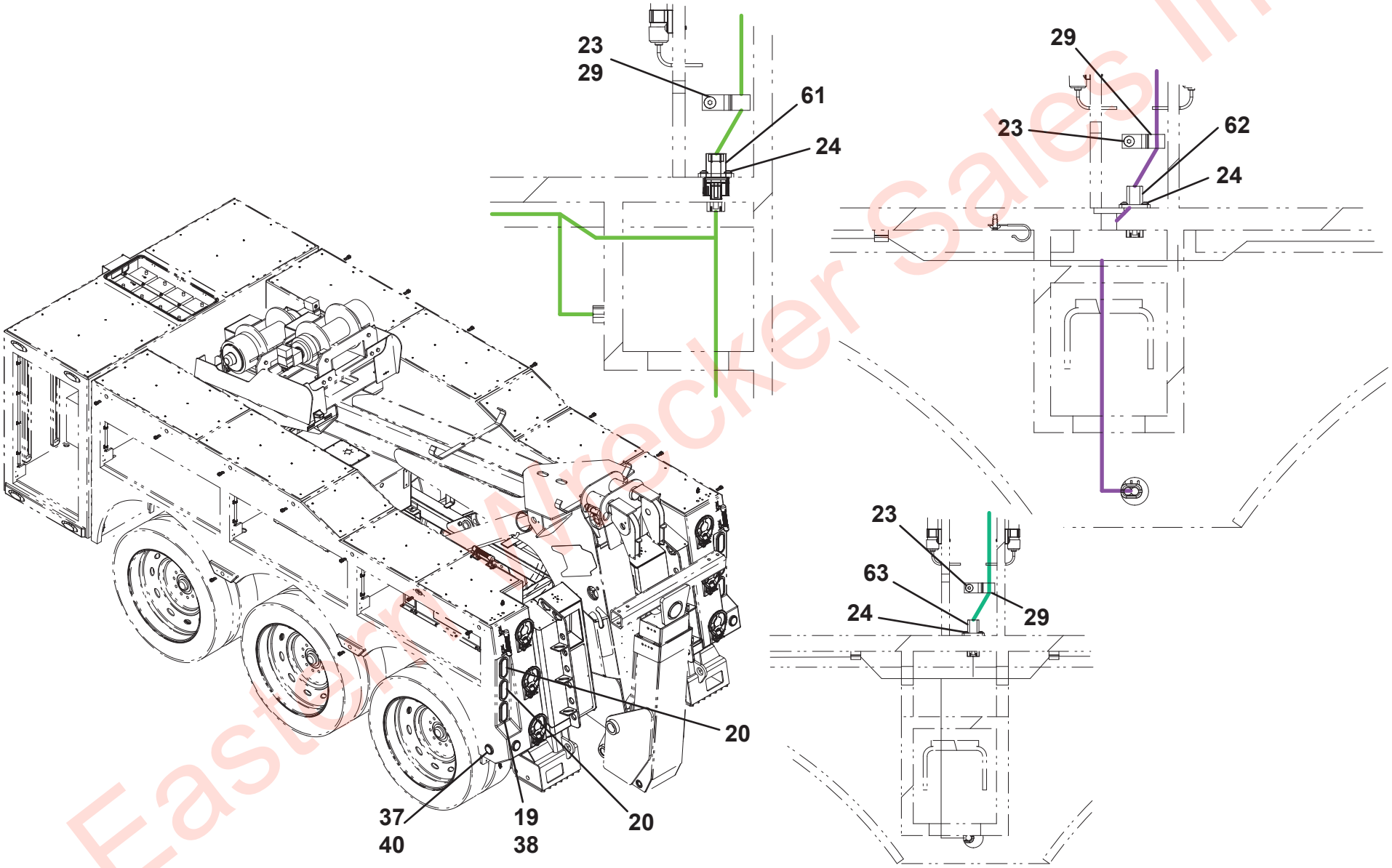

Eastern Wrecker Sales Inc

ELECTRICAL INSTALLATION - TRI-AXLE

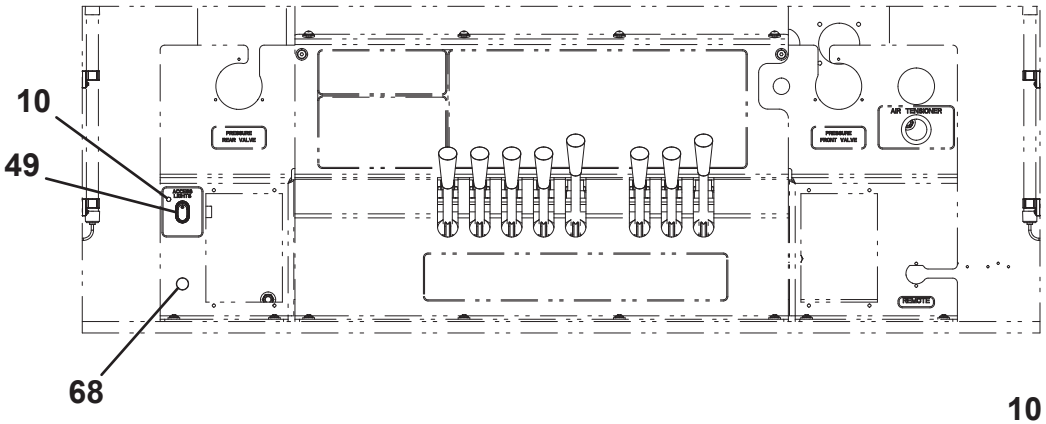

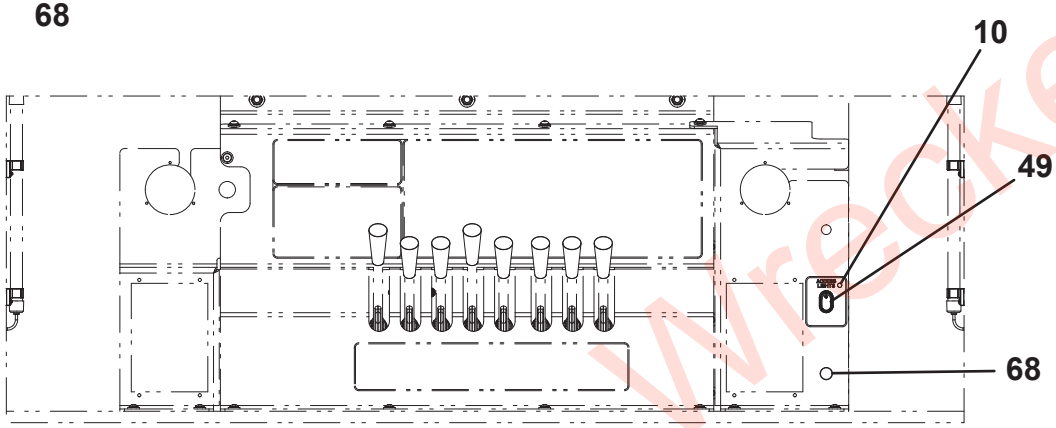

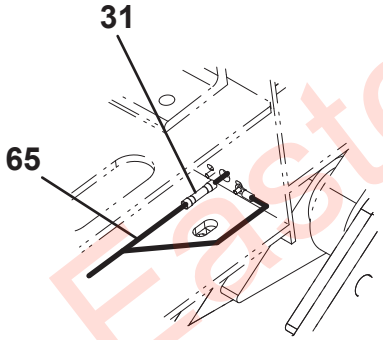

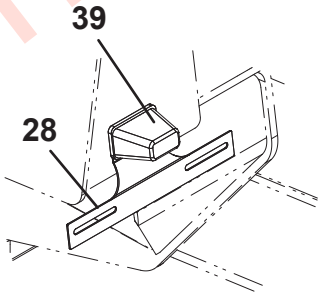

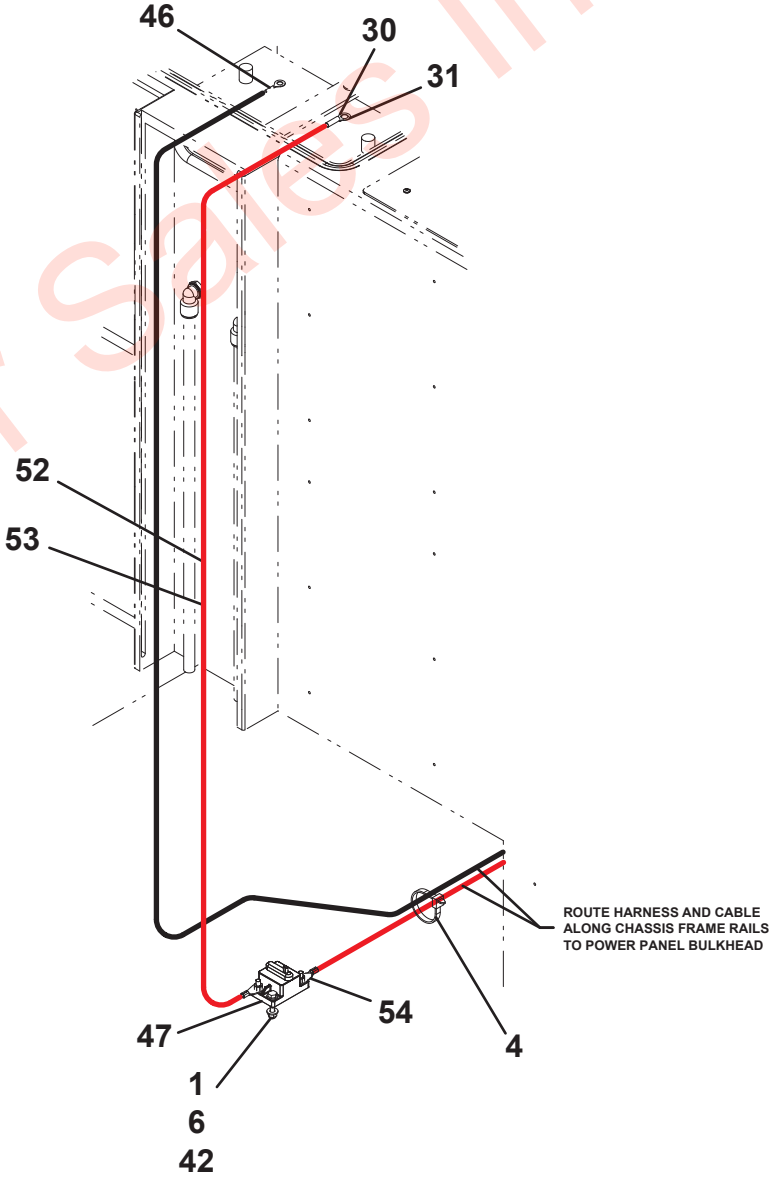

Eastern Wrecker Sales Inc

ELECTRICAL INSTALLATION - TRI-AXLE

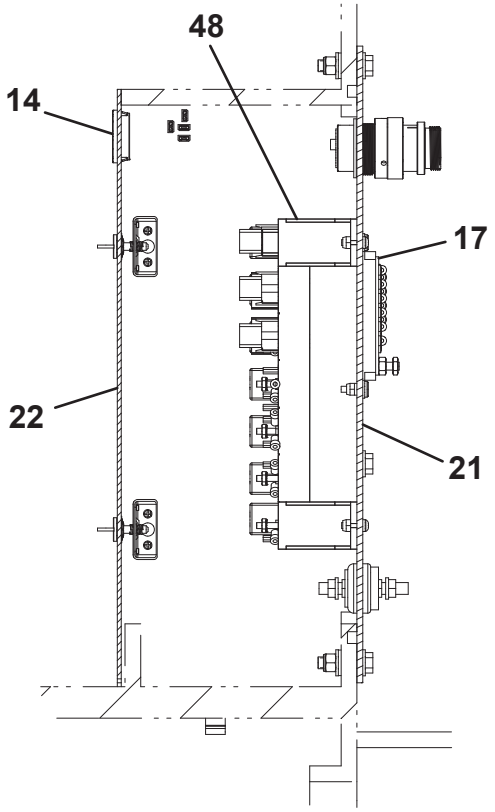

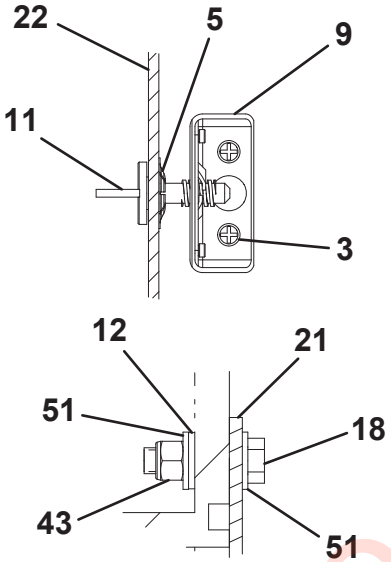

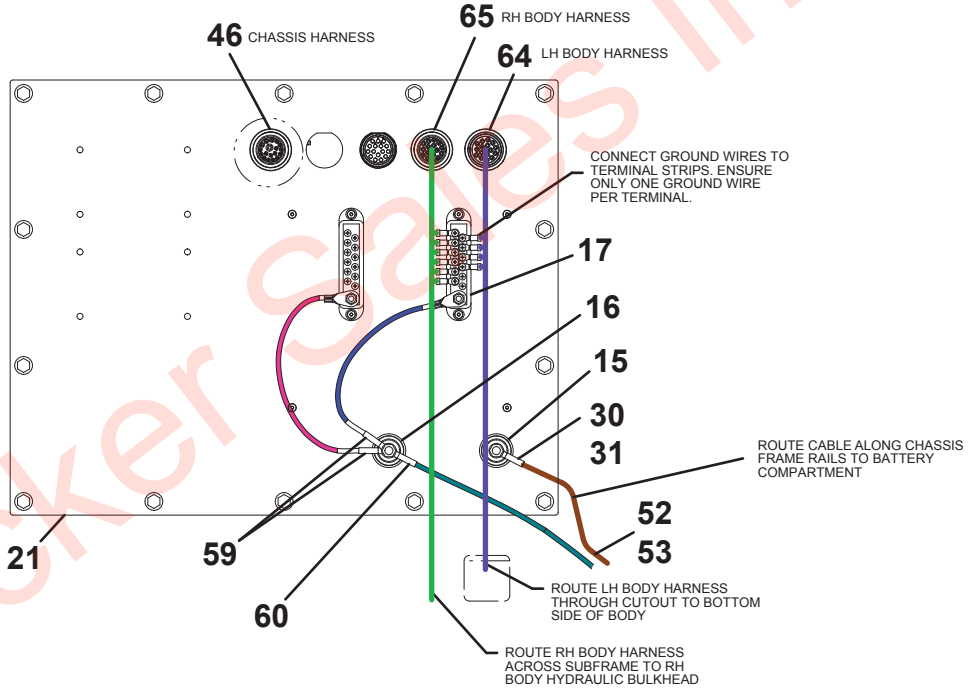

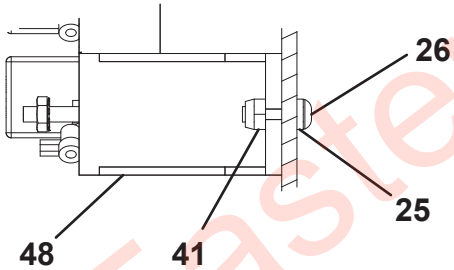

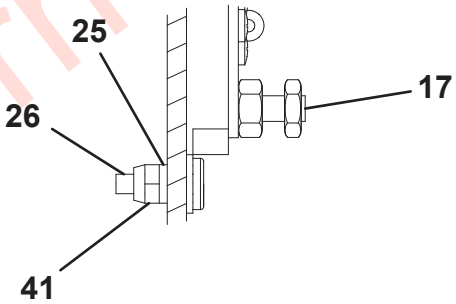

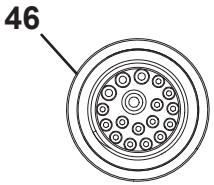

CHASSIS WIRING TO POWER PANEL			
CAVITY	CIRCUIT	GAUGE	FUNCTION
1			PLUGGED
2			PLUGGED
3			PLUGGED
4			PLUGGED
5			PLUGGED
6	22A	10	FLASHER POWER FROM BATT
7			PLUGGED
8			PLUGGED
9	11	FROM CHASSIS	IGN HOT
10	12	FROM CHASSIS	RH S/T
11	13	FROM CHASSIS	LH S/T
12	14	FROM CHASSIS	MARKER
13	15	FROM CHASSIS	BACK-UP
14			PLUGGED
15			PLUGGED
16			PLUGGED
17			PLUGGED
18			PLUGGED

Eastern Wrecker Sales Inc

ELECTRICAL INSTALLATION - TRI-AXLE

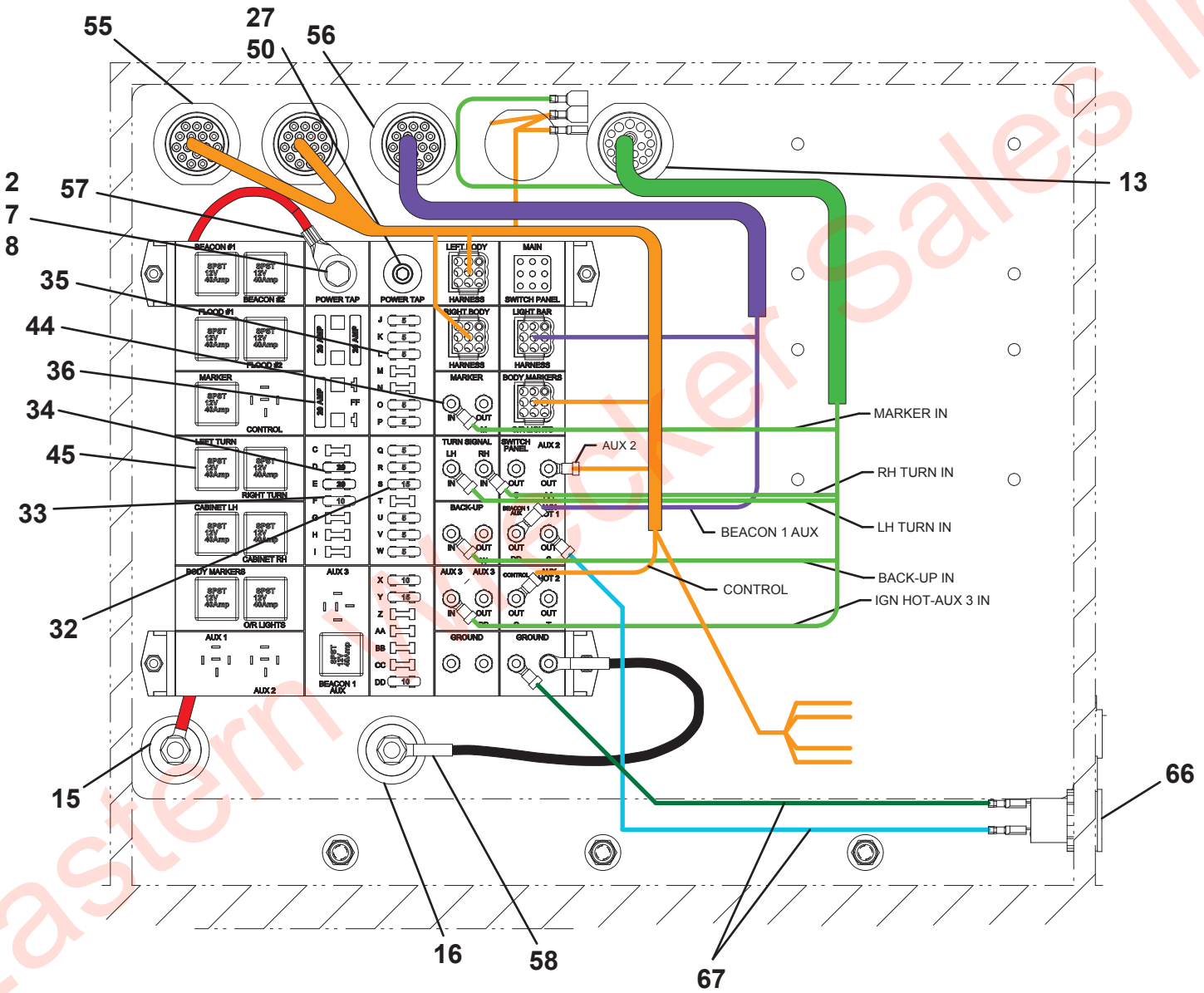

Eastern Wrecker Sales Inc

THIS PAGE INTENTIONALLY LEFT BLANK

Eastern Wrecker Sales Inc

BACKUP ALARM INSTALLATION

ITEM	PART NO.	DESCRIPTION	QTY	REV
	1001213538	Backup Alarm Installation	Ref	A
1	7011000006	Alarm, Backup	1	
	1001175061	Alarm, Backup Variable	1	
2	7790141251	Screw, 0.25” x 0.75”	2	

Eastern Wrecker Sales Inc

BACKUP ALARM INSTALLATION

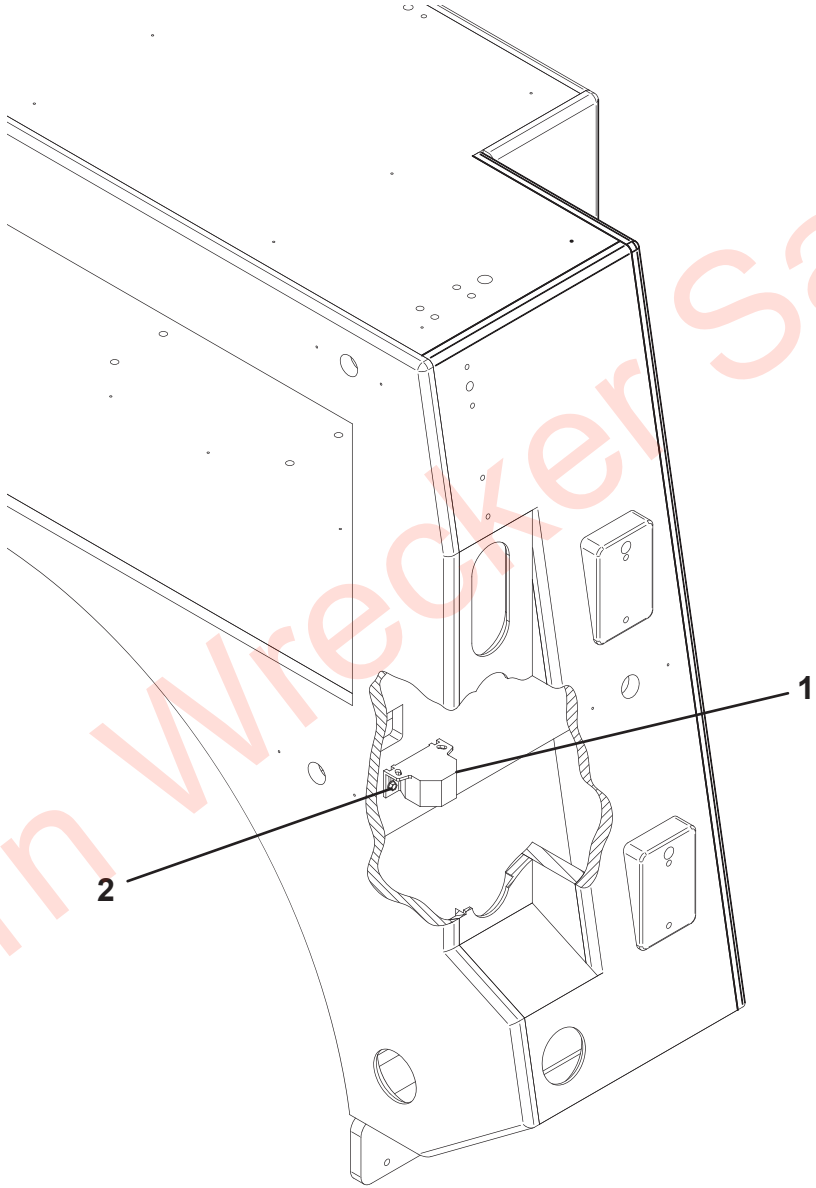

Eastern Wrecker Sales Inc

E-STOP INSTALLATION

ITEM	PART NO.	DESCRIPTION	QTY	REV
	1001212210	E-Stop Installation	Ref	D
1	7870000128	Switch	2	
2	7870000129	Switch	2	
3	1001171394	Harness	1	
4	7345001714	Terminal	2	
5	7346000039	Tubing	1	

Eastern Wrecker Sales Inc

E-STOP INSTALLATION

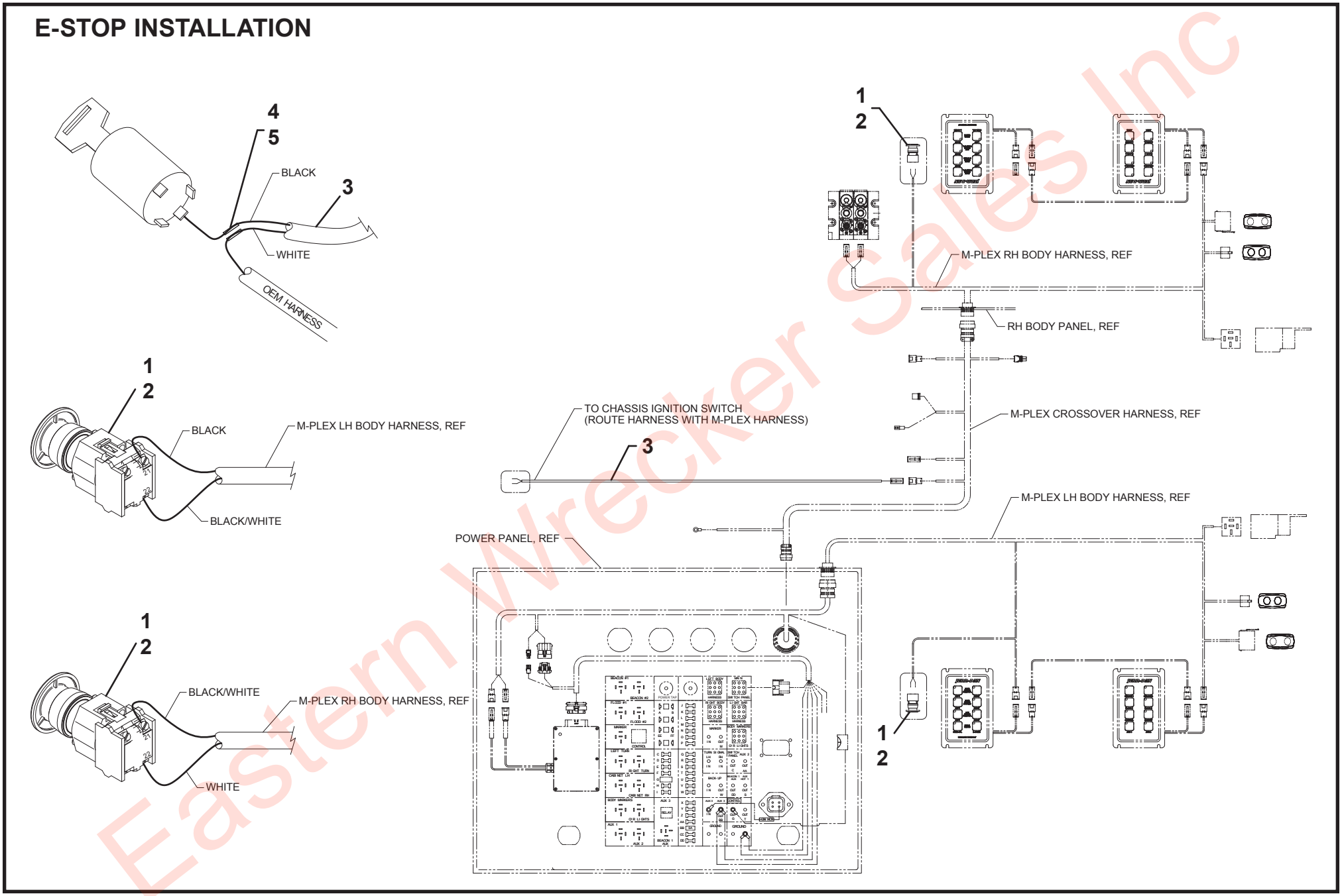

Eastern Wrecker Sales Inc

MARKER LIGHT INSTALLATION - TANDEM

ITEM	PART NO.	DESCRIPTION	QTY	REV
	1001196592	Marker Light Installation - Tandem	Ref	D
1	1001154101	Screw, #10 x 0.38”	44	
2	7590000262	Light, Amber	20	
3	7590000282	Light, Red	2	

Eastern Wrecker Sales Inc

MARKER LIGHT INSTALLATION - TANDEM

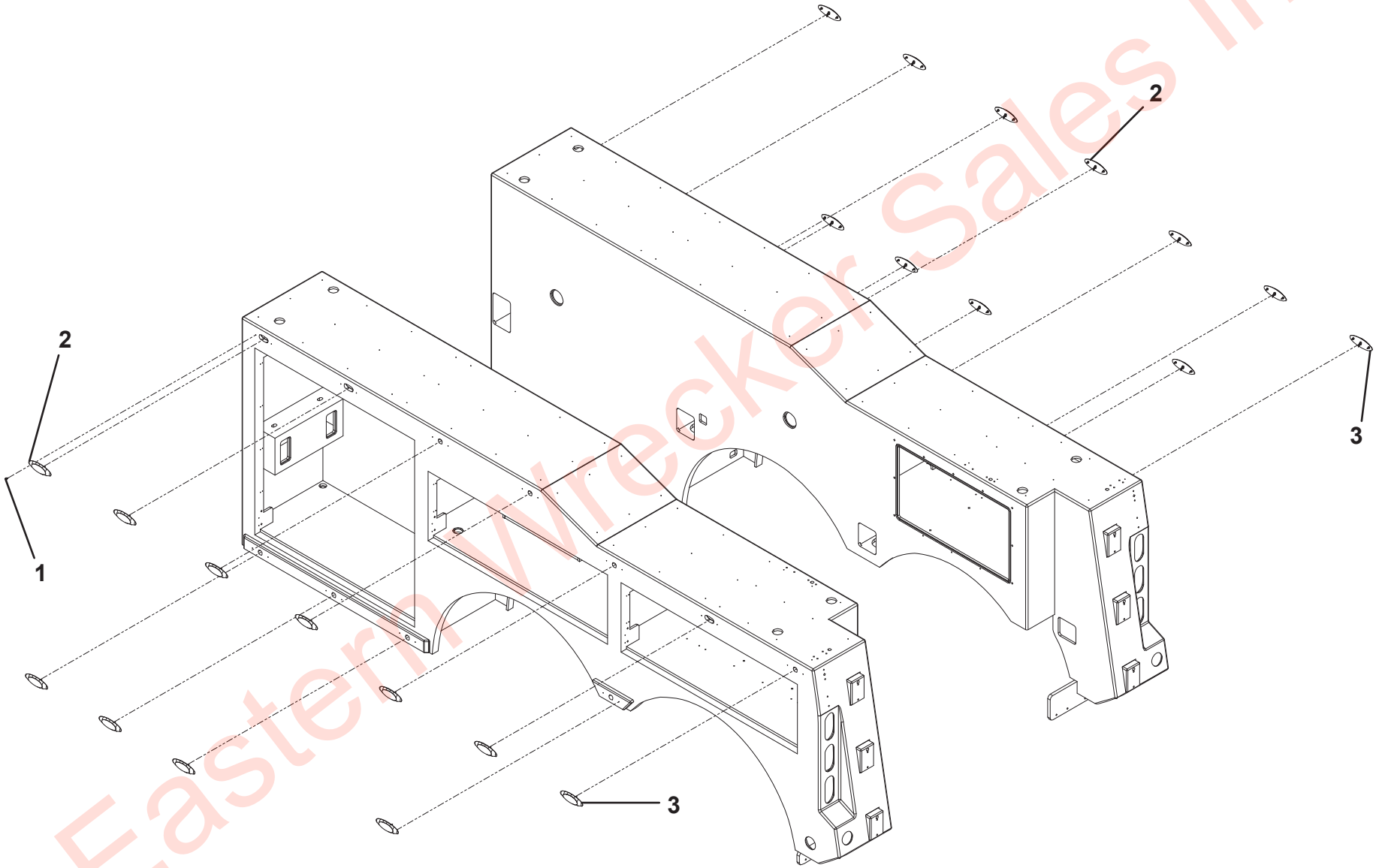

Eastern Wrecker Sales Inc

MARKER LIGHT INSTALLATION - TRI-AXLE

ITEM	PART NO.	DESCRIPTION	QTY	REV
	1001196594	Marker Light Installation - Tri-Axle	Ref	D
1	1001154101	Screw, #10 x 0.38”	36	
2	7590000262	Light, Amber	16	
3	7590000282	Light, Red	2	

Eastern Wrecker Sales Inc

MARKER LIGHT INSTALLATION - TRI-AXLE

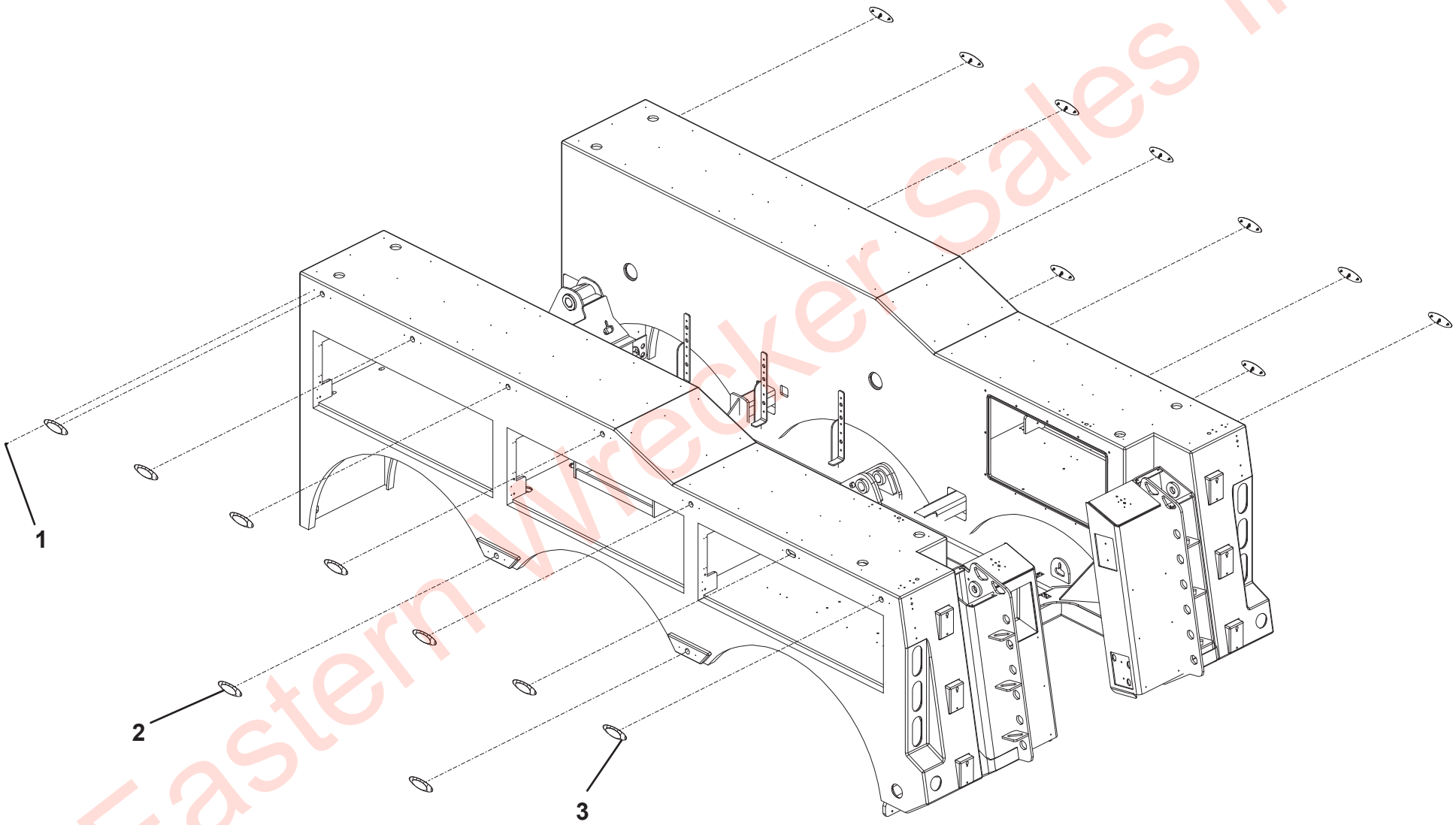

Eastern Wrecker Sales Inc

COMPARTMENT LIGHT INSTALLATION - TANDEM

ITEM	PART NO.	DESCRIPTION	QTY	REV
	1001196522	Compartment Light Installation - Tandem	Ref	B
1	1001154527	Lamp, 40”	4	
2	1001166549	Lamp, 12”	8	
3	1001196552	Screw, #8 x 0.75”	64	
4	1001199081	Mount	32	

Eastern Wrecker Sales Inc

COMPARTMENT LIGHT INSTALLATION - TANDEM

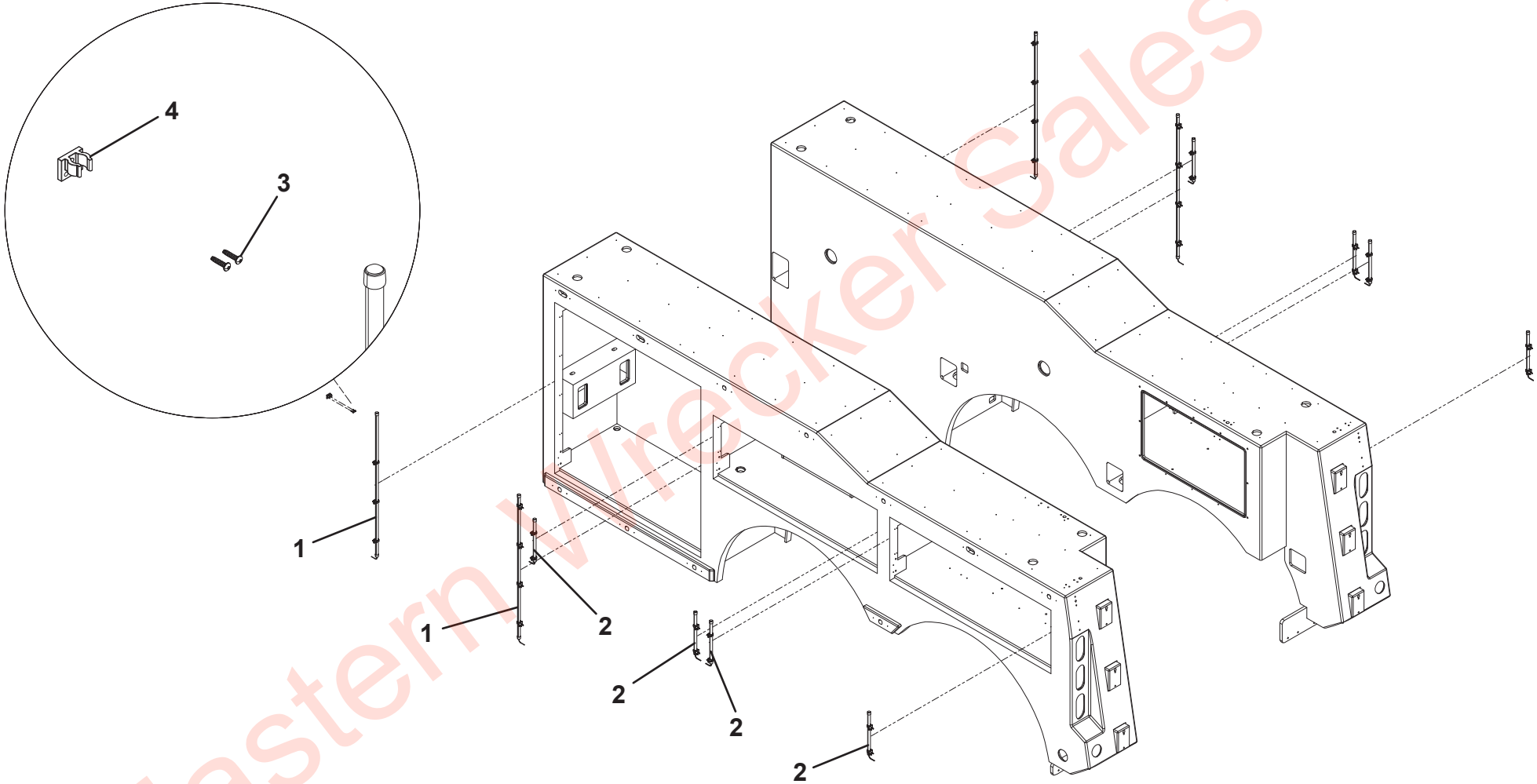

Eastern Wrecker Sales Inc

COMPARTMENT LIGHT INSTALLATION - TRI-AXLE

ITEM	PART NO.	DESCRIPTION	QTY	REV
	1001196523	Compartment Light Installation - Tri-Axle	Ref	B
1	1001166549	Lamp, 12”	12	
2	1001196552	Screw, #8 x 0.75”	48	
3	1001199081	Mount	24	

Eastern Wrecker Sales Inc

COMPARTMENT LIGHT INSTALLATION - TRI-AXLE

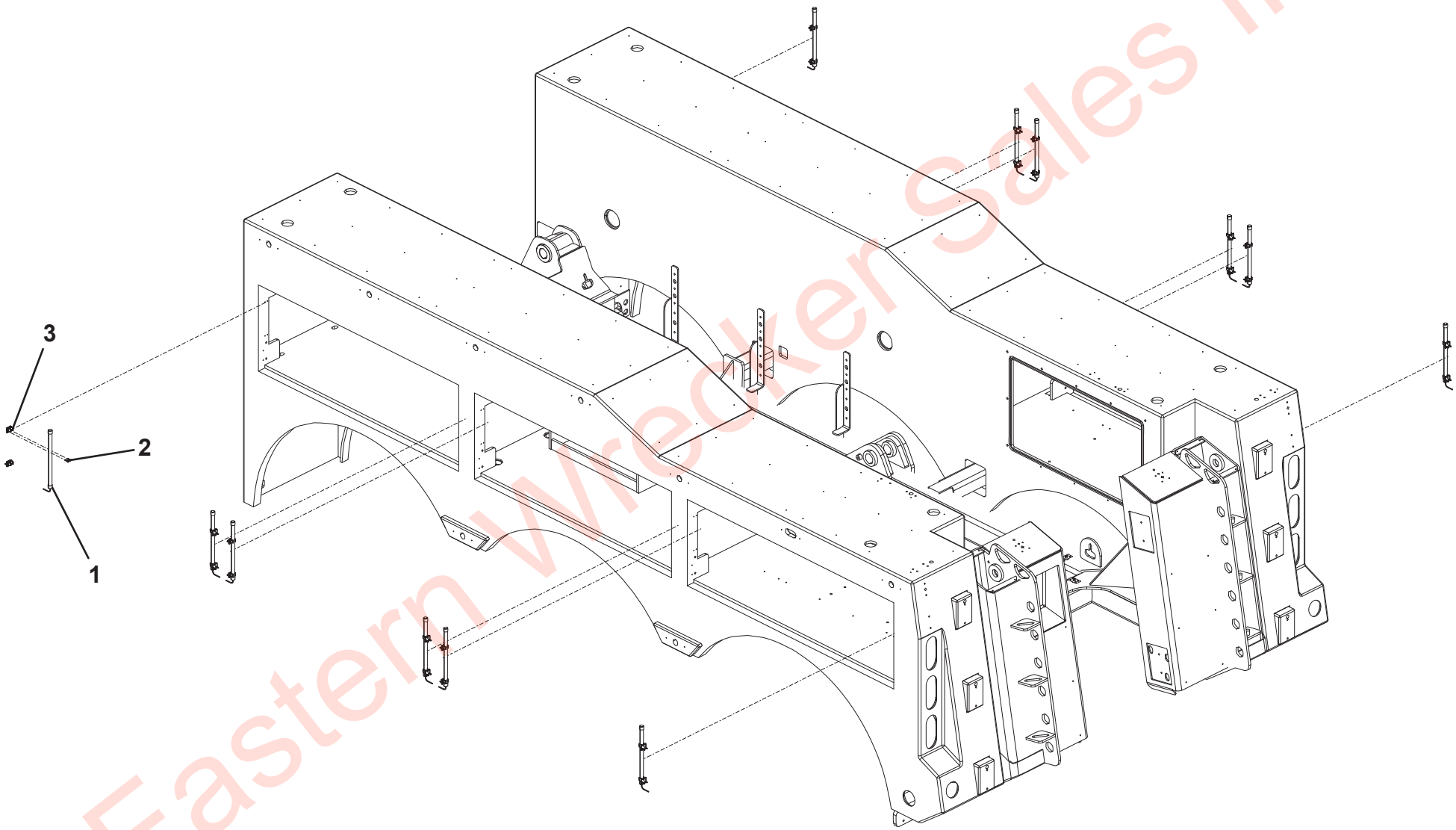

Eastern Wrecker Sales Inc

WING LIGHT BRACKET INSTALLATION

ITEM	PART NO.	DESCRIPTION	QTY	REV
	1001228841	Wing Light Bracket Installation	Ref	A
1	1001213104	Mount, RH	1	
2	1001213105	Mount, LH	1	
3	1001213110	Plate	2	
4	1001214129	Plate	4	
5	0641610	Capscrew, 0.38” - 16NC x 1.25”	4	
6	4751600	Washer, 0.38” ID	8	
7	3271605	Nut, 0.38” - 16NC	4	
8	7114150618	Screw, 0.31” - 18NC x 0.75”	8	
9	7661000029	Nut, 0.31” - 18NC	8	

Eastern Wrecker Sales Inc

WING LIGHT BRACKET INSTALLATION

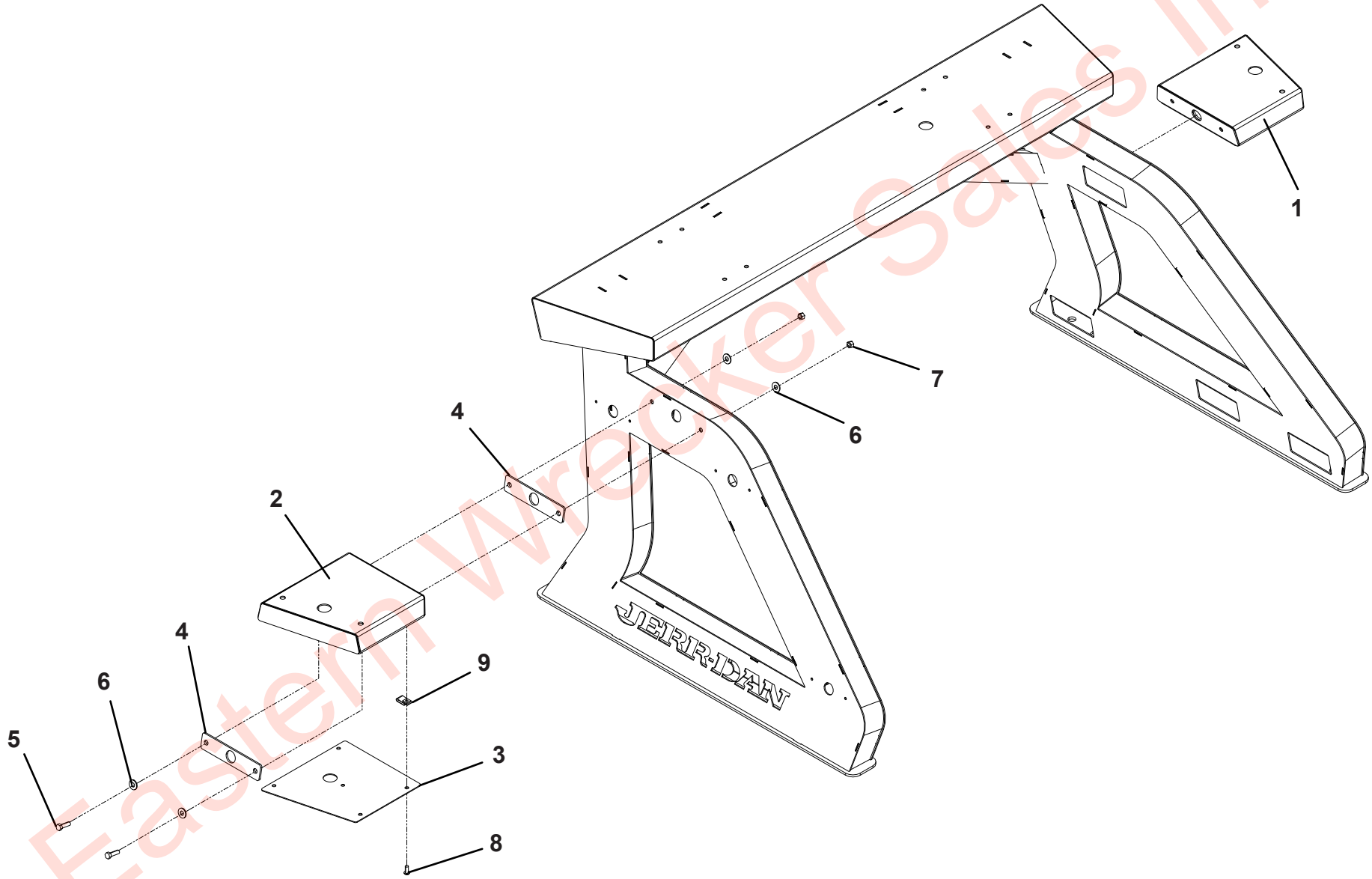

Eastern Wrecker Sales Inc

WING LIGHT INSTALLATION

ITEM	PART NO.	DESCRIPTION	QTY	REV
	1001228842	Wing Light Installation	Ref	A
1	1001133591	Light, Amber CD3 (See Separate Breakdown in this Section)	2	
	1001129861	Light, Amber Whelen	2	
2	7493000011	Grommet	2	
3	0641810	Capscrew, 0.50” - 13NC x 1.25”	4	
4	4711800	Washer, 0.50” ID	4	
5	7660182601	Locknut, 0.50” - 13NC	4	
6	4178000402	Bracket	4	

Eastern Wrecker Sales Inc

WING LIGHT INSTALLATION

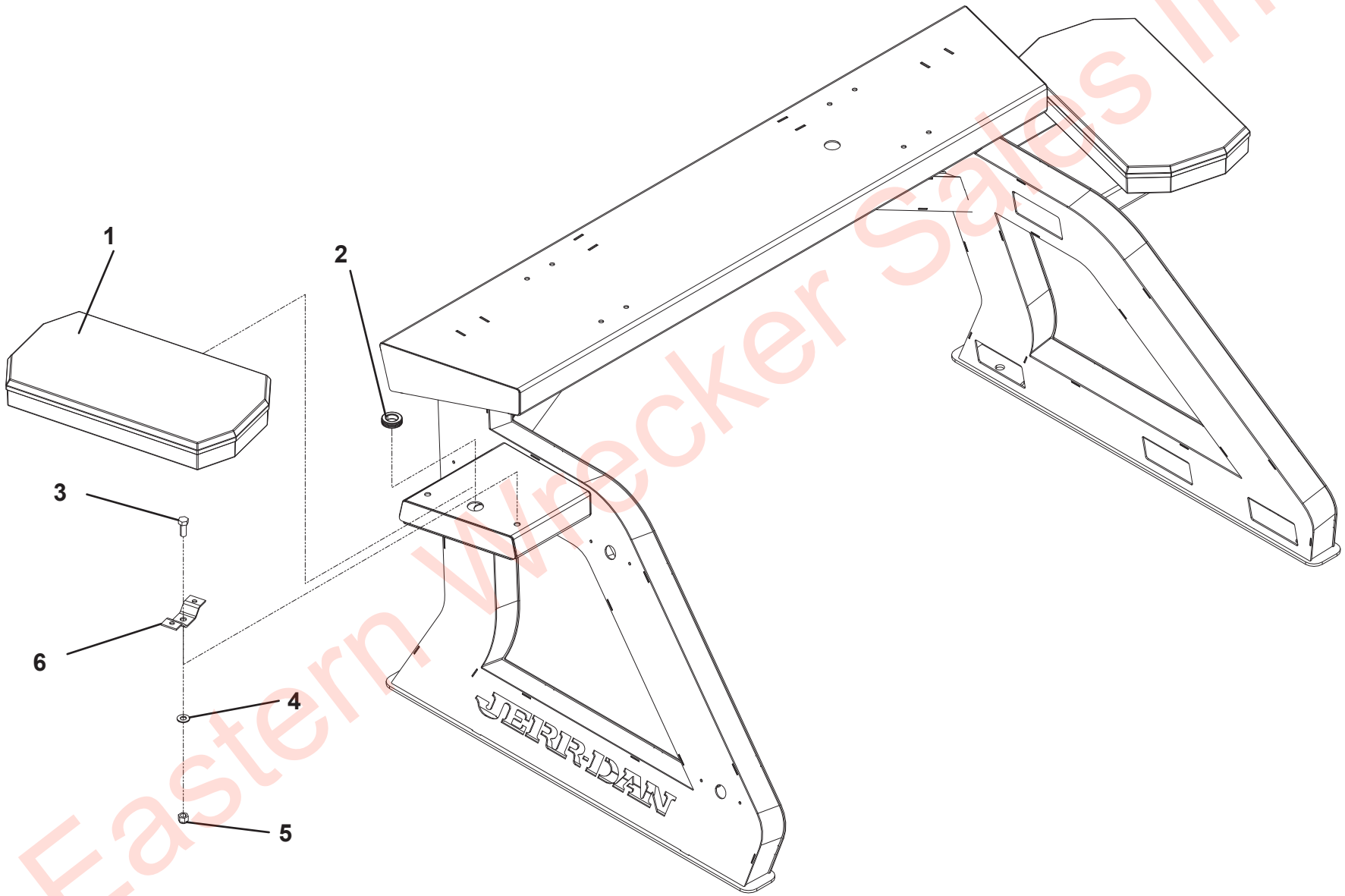

Eastern Wrecker Sales Inc

PUBLIC SAFETY LIGHT BAR - 1001133591

ITEM	PART NO.	DESCRIPTION	QTY	REV
	1001133591	Public Safety Light Bar	Ref	B
1	70051014	LED Corner Module & Bracket	2	
2	70051015	Lens, Clear Upper (Not Shown)	1	
3	70051016	Cable, Jerr-Dan 2 Wire (Not Shown)	1	
4	9346310098	Flasher	1	
5	70051017	Lens, Clear Lower	1	
6	9590310201	LED Center Module	2	
7	70051018	Bracket, Mounting	1	

Eastern Wrecker Sales Inc

PUBLIC SAFETY LIGHT BAR - 1001133591

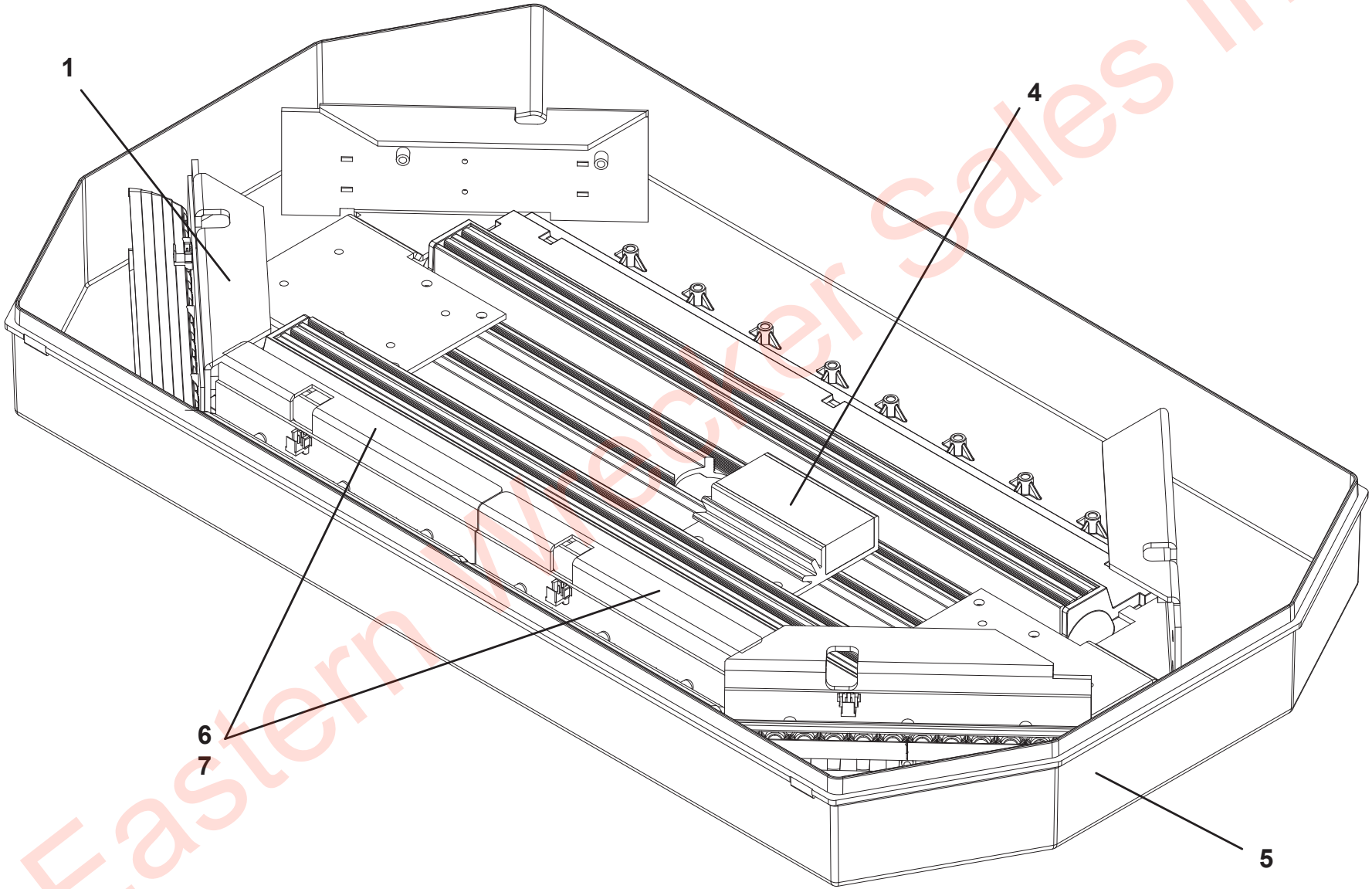

Eastern Wrecker Sales Inc

22” WHELEN LIGHT BAR - 1001199478

ITEM	PART NO.	DESCRIPTION	QTY	REV
	1001199478	22” Whelen Light Bar	Ref	B
1	70051019	Base	1	
2	70050169	Grommet	1	
3	70051020	Screw, 10-24NC X 0.88"	1	
4	70051021	Bracket, Bulkhead Lens Mount	2	
5	70051022	Bracket, I/O Anchor	1	
6	70051023	Assembly, I/O BD Mini	1	
7	70051024	Assembly, Cable	1	
8	70051025	Clamp, Cable	1	
9	70050174	Nut, Wiz 10-24NC	1	
10	70051026	Ty Wrap, 6" Black	AR	
11	70051027	Bracket, End Clamp	2	
12	70051028	Screw, 6-32NC X 0.50"	10	
13	70051029	Assy, Corner L-Front/R-Rear Amber	1	
14	70051030	Assy, Corner L-Rear/R-Front Amber	1	
15	70051031	Assy, Corner L-Front/R-Rear Blue	1	
16	70051032	Assy, Corner L-Rear/R-Front Blue	1	
17	70051033	Assembly, Blank Rear Drvr Corner	1	
18	70051034	Assembly, Blank Rear Pass Corner	1	
19	70051035	Bracket, Corner Clamp	4	
20	70051036	Bracket, Half Filler	2	
21	70051037	Sub Assy, Short Directional Amber	2	
22	70051038	Sub Assy, Short Directional Blue	2	
23	70051039	Bracket, Filler	2	
24	70051040	Assembly, Harness	1	
25	70051041	Assembly, Harness	1	
26	70051042	Assembly, Harness	1	
27	70051043	Assembly, Harness	1	
28	70051044	Bracket, Snap-In	4	
29	70051045	Ty Wrap, 3" Black	AR	
30	70051046	Sub Assy, Cut Dome Clear	2	
31	70051047	Sub Assy, Cut Dome Blue	2	
32	70051048	Seal, Lens Divider	2	
33	70051049	Divider, Lens	1	
34	70051050	Screw, 10-24NC X 1.25"	4	
36	70051051	Tape, VHB Endcap Trim Mount	4	
37	70051052	Cover, Top Extruded 7.325"	2	

Eastern Wrecker Sales Inc

22” WHELEN LIGHT BAR - 1001199478

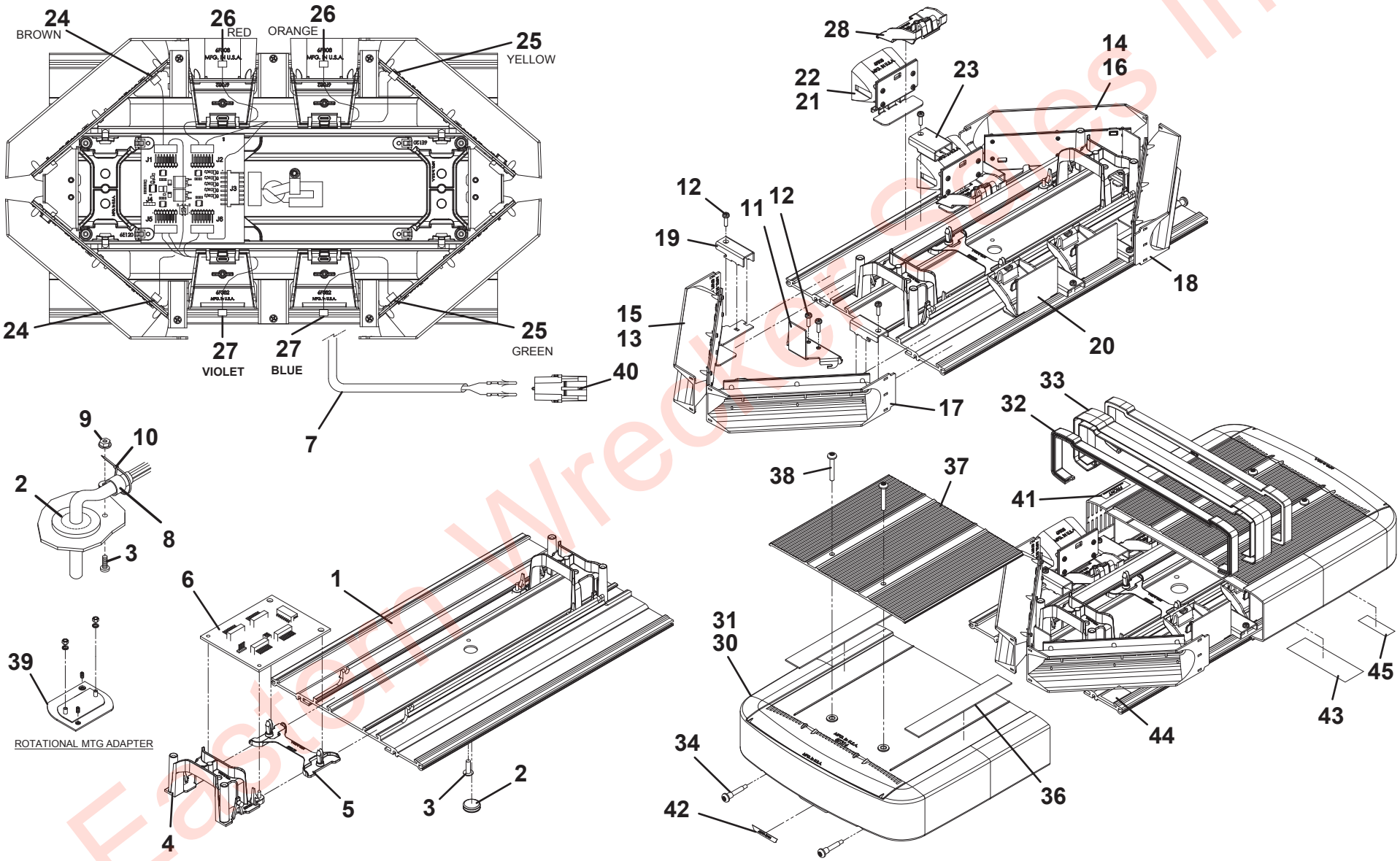

Eastern Wrecker Sales Inc

SWITCH PANEL INSTALLATION (PRIOR TO S/N 0230004251)

ITEM	PART NO.	DESCRIPTION	QTY	REV
	1001197968	Switch Panel Installation	Ref	B
1	100011	Loctite	A/R	
2	1001151546	Nutsert, #8-32 UNC	20	
3	1001166978	Washer, 0.25” ID	8	
4	1001167310	Cable Strap	12	
5	1001191612	Nut, 0.25”-20	4	
6	1001195257	Screw, 0.25” X 0.50”	12	
7	7114080418	Bolt, #8-32 X 0.50”	20	
8	7114140618	Bolt, 0.25”-20 X 0.75”	8	
9	7660142600	Locknut, 0.25"-20NC	4	
10	7950140003	Lockwasher, 0.25" ID	4	
11	7950140143	Flatwasher, 0.25” ID	20	
12	1001135132	Electrical M Plex	1	
13	1001189197	Harness	1	
14	1001189207	Harness	1	
15	1001189219	Harness	1	
16	1001189296	Harness	1	
17	7552000455	Harness	1	
18	7894000004	Tie Strap	15	
19	7457000006	Fuse	1	
20	7740000001	Relay	1	
21	7701000067	Plug	1	

Eastern Wrecker Sales Inc

SWITCH PANEL INSTALLATION (PRIOR TO S/N 0230004251)

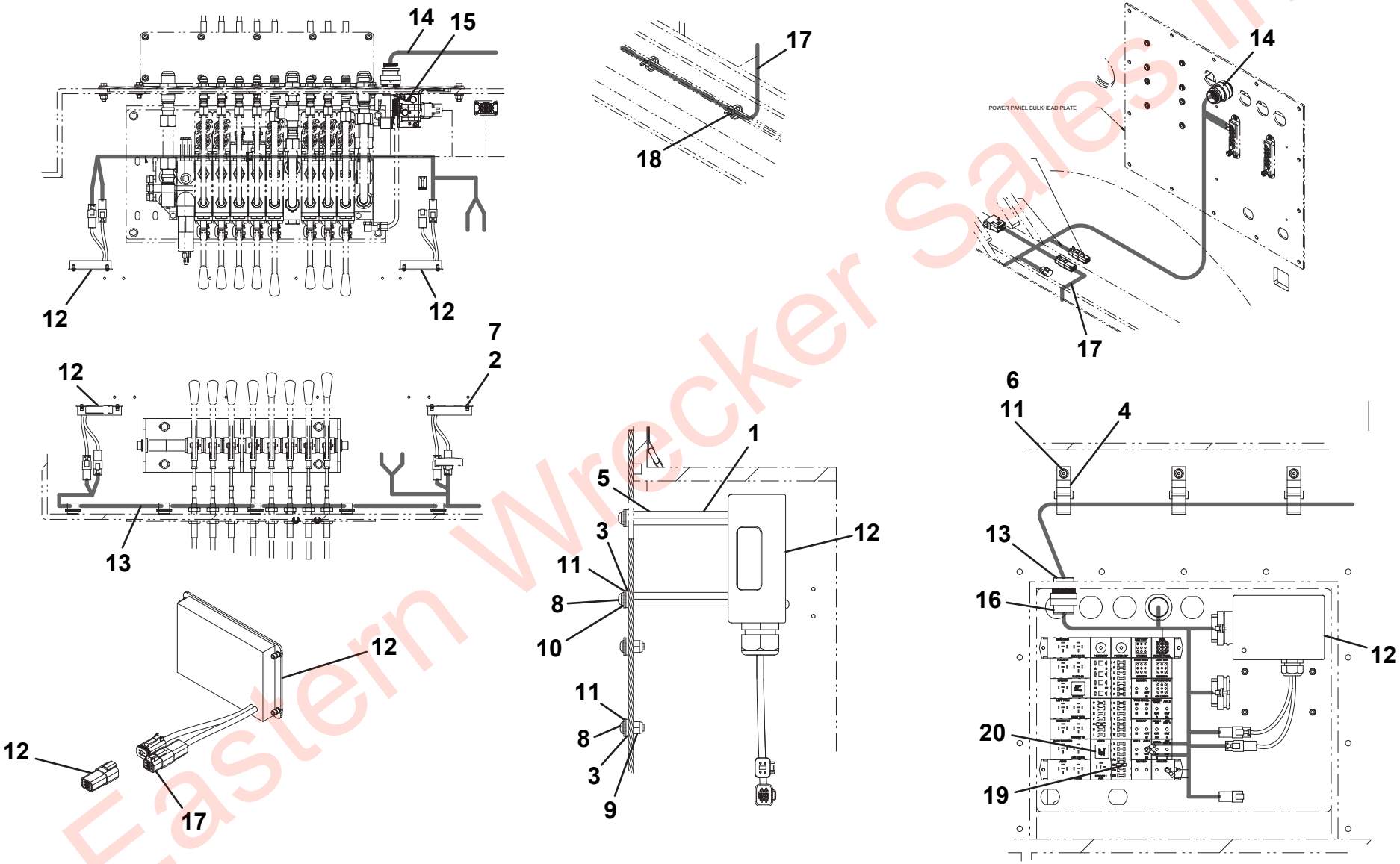

Eastern Wrecker Sales Inc

SWITCH PANEL INSTALLATION (S/N 0230004251 TO PRESENT)

ITEM	PART NO.	DESCRIPTION	QTY	REV
	1001216174	Switch Panel Installation	Ref	D
1	1001205244	Multiplex Kit	1	
2	1001211000*	Multiplex Module	1	
3	1001211001*	Keypad, In Cab	1	
4	1001211002*	Keypad, In Body	2	
5	1001211003*	Keypad, Winch	2	
6	1001166978	Washer, 0.25” ID	4	
7	1001195257	Screw, 0.25” x 0.50”	20	
8	7660142601	Locknut, 0.25” - 20NC	4	
9	1001209590	Screw, 0.25” x 1.00”	4	
10	1001209616	Nut, #10 - 32NC	16	
11	7280000006	Clip	20	
12	7950140143	Flatwasher, 0.25” ID	44	
13	1001208950	Harness, Left Jumper	1	
14	1001208951	Harness, Left Body	1	
15	1001208952	Harness, Multiplex to PDP	1	
16	1001215100	Harness, Right Body	1	
17	1001216916	Harness, Crossover	1	
18	5526000553	Tie Strap	35	
19	1001217309	Harness, Winch	1	
20	7346000039	Tubing	0.5ft	

Eastern Wrecker Sales Inc

SWITCH PANEL INSTALLATION (S/N 0230004251 TO PRESENT)

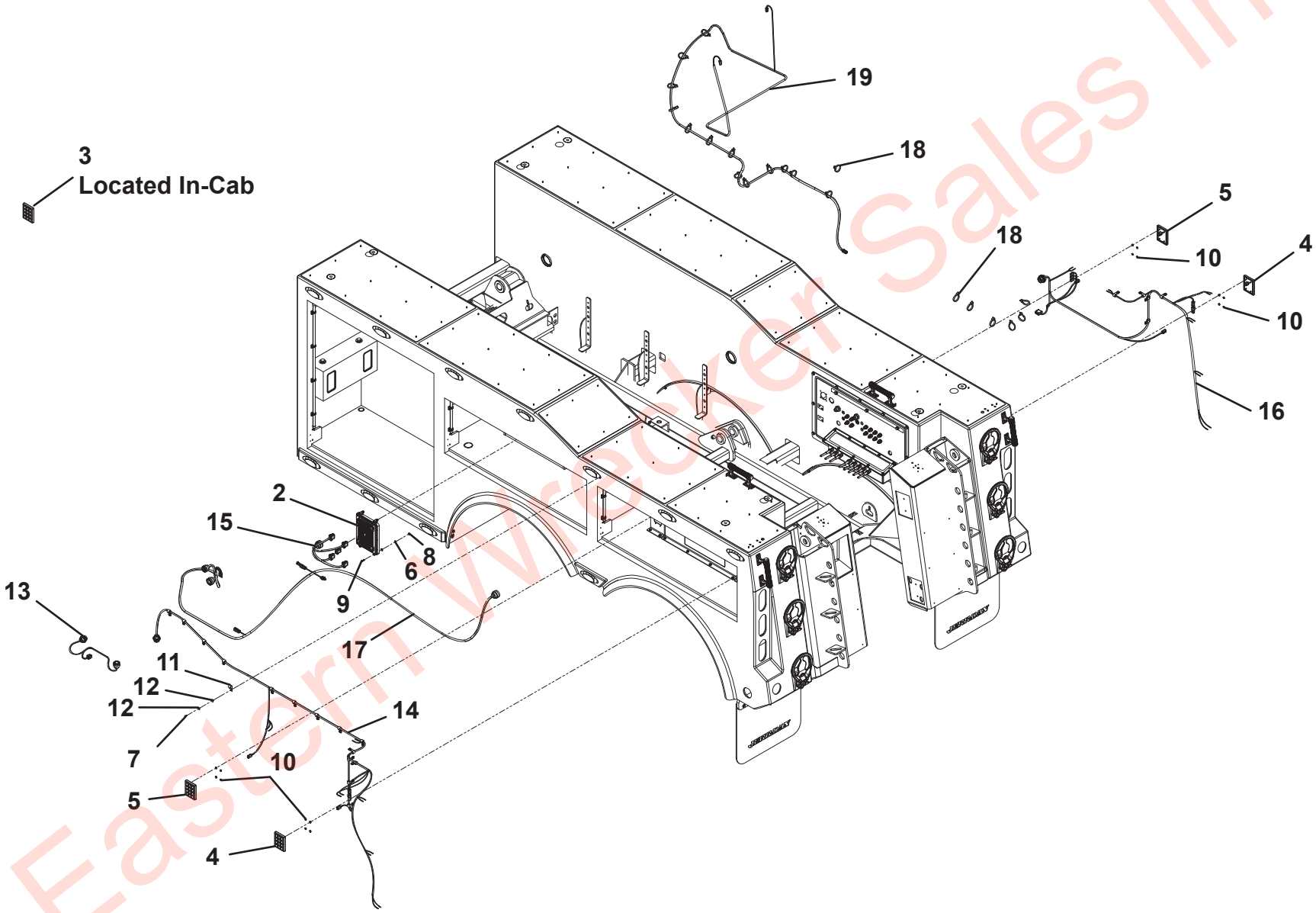

Eastern Wrecker Sales Inc

THIS PAGE INTENTIONALLY LEFT BLANK

Eastern Wrecker Sales Inc

SECTION 8 - DECAL

Eastern Wrecker Sales Inc

DECAL INSTALLATION

ITEM	PART NO.	DESCRIPTION	QTY	REV
	1001205404	Decal Installation	Ref	E
1	1001127220	Decal, Tag	1	
2	1001132328	Decal, Placard	1	
3	1001132346	Patent	1	
4	1001136075	Decal, Hazardous Voltage	1	
5	1001136080	Decal, Recover Stability	2	
6	1001136091	Decal, Towed Load	2	
7	1001136094	Decal, Crushing Hazard	2	
8	1001136103	Decal, Electrocution	4	
9	1001136119	Decal, Hydraulic Hazard	1	
10	1001137169	Decal, Pinch	2	
11	1001138537	Decal, Hook	2	
12	1001138612	Decal, Battery	1	
13	1001141227	Decal, Backing	1	
14	1001142828	Decal, Fall	1	
15	1001206367	Decal, Jerr-Dan	2	
16	1001174346	Decal, Spade Step	4	
17	1001198881	Decal, Fuse Panel	1	
18	1001205331	Decal, Lube Chart	1	
19	1001199065	Decal, Step	6	
20	7330000143	Decal, Made in the USA	1	
21	7330000208	Decal, Service Air	1	
22	7330000209	Decal, Supply Air	1	
23	7330000210	Decal, Aux. Air	1	
24	7330000689	Cert. Decal	1	
25	7759000004	Pop Rivet	14	
26	1001206364	Decal, JFB Badge	2	
27	1001142452	Decal, No Step	2	

Eastern Wrecker Sales Inc

DECAL INSTALLATION

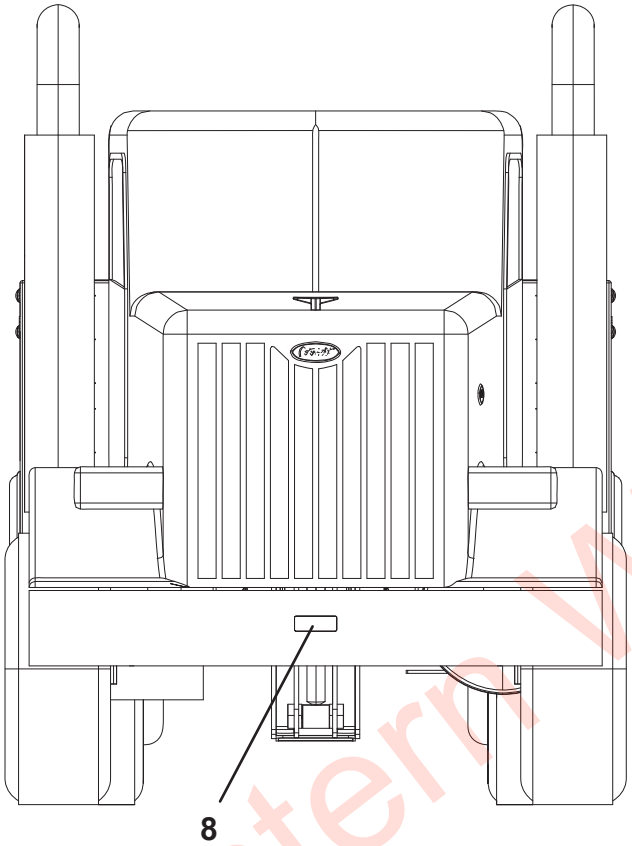

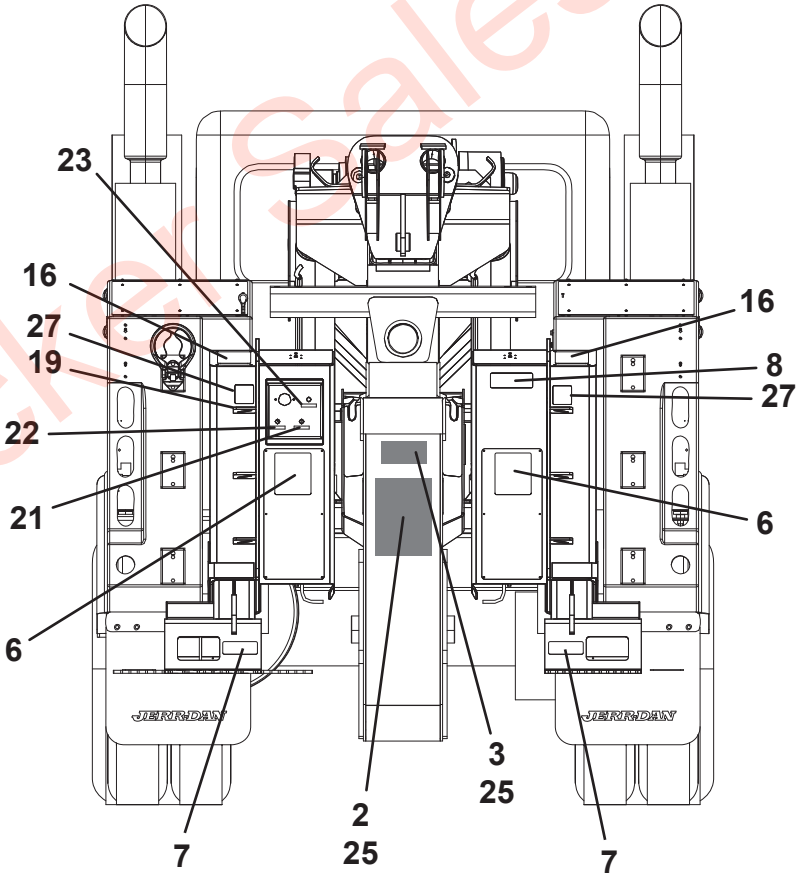

Eastern Wrecker Sales Inc

DECAL INSTALLATION

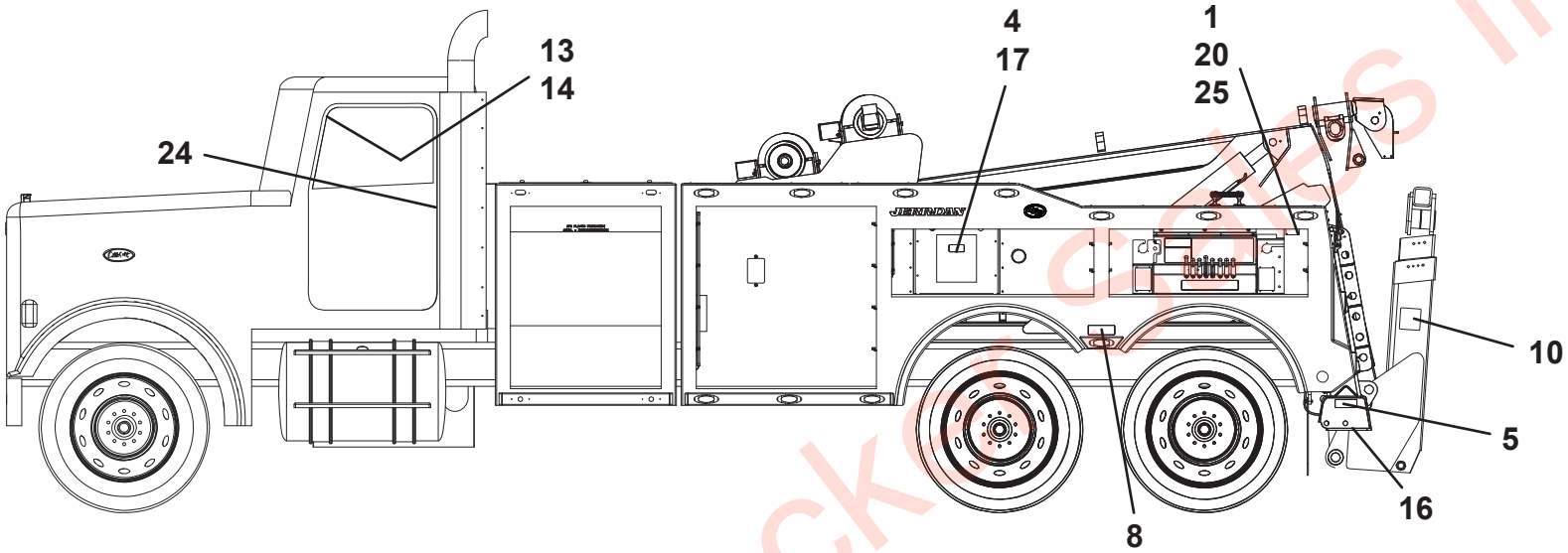

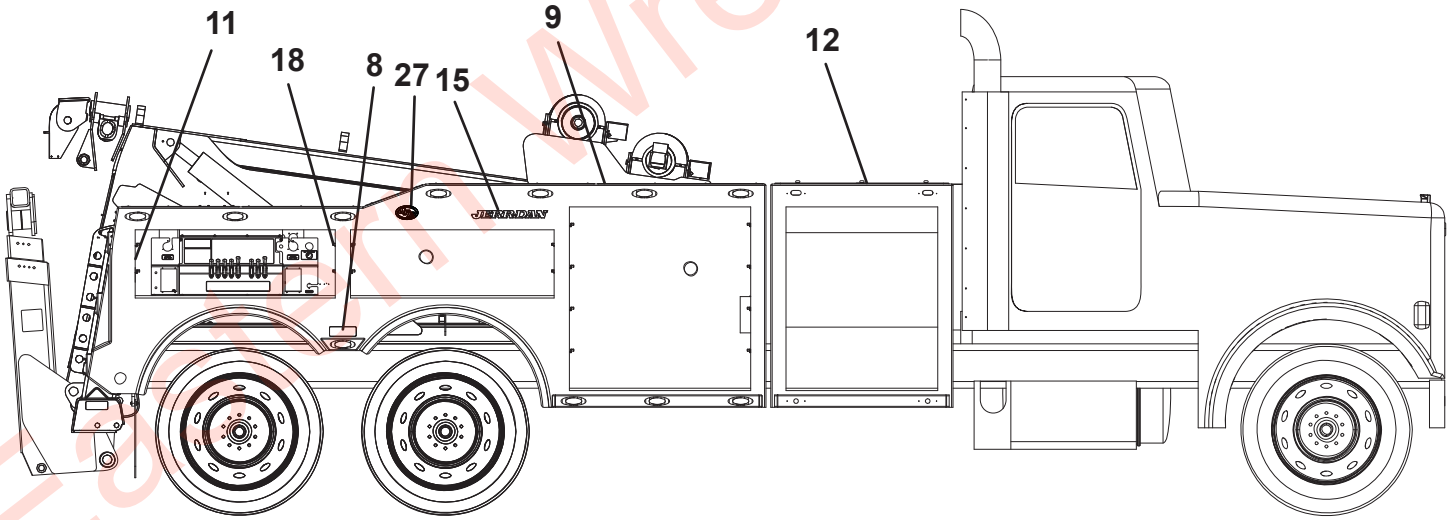

Eastern Wrecker Sales Inc

THIS PAGE INTENTIONALLY LEFT BLANK

Eastern Wrecker Sales Inc

THIS PAGE INTENTIONALLY LEFT BLANK

Eastern Wrecker Sales Inc

SECTION 9 - ACCESSORIES

Eastern Wrecker Sales Inc

TOOL DRAWER INSTALLATION - TANDEM

ITEM	PART NO.	DESCRIPTION	QTY	REV
	1001195256	Tool Drawer Installation - Tandem	Ref	A
1	1001194676	Screw, 0.25” x 0.75”	6	
2	1001195257	Screw, 0.25” x 0.50”	8	
3	1001195279	Pad	1	
4	1001190410	ToolBox	1	

Eastern Wrecker Sales Inc

TOOL DRAWER INSTALLATION - TANDEM

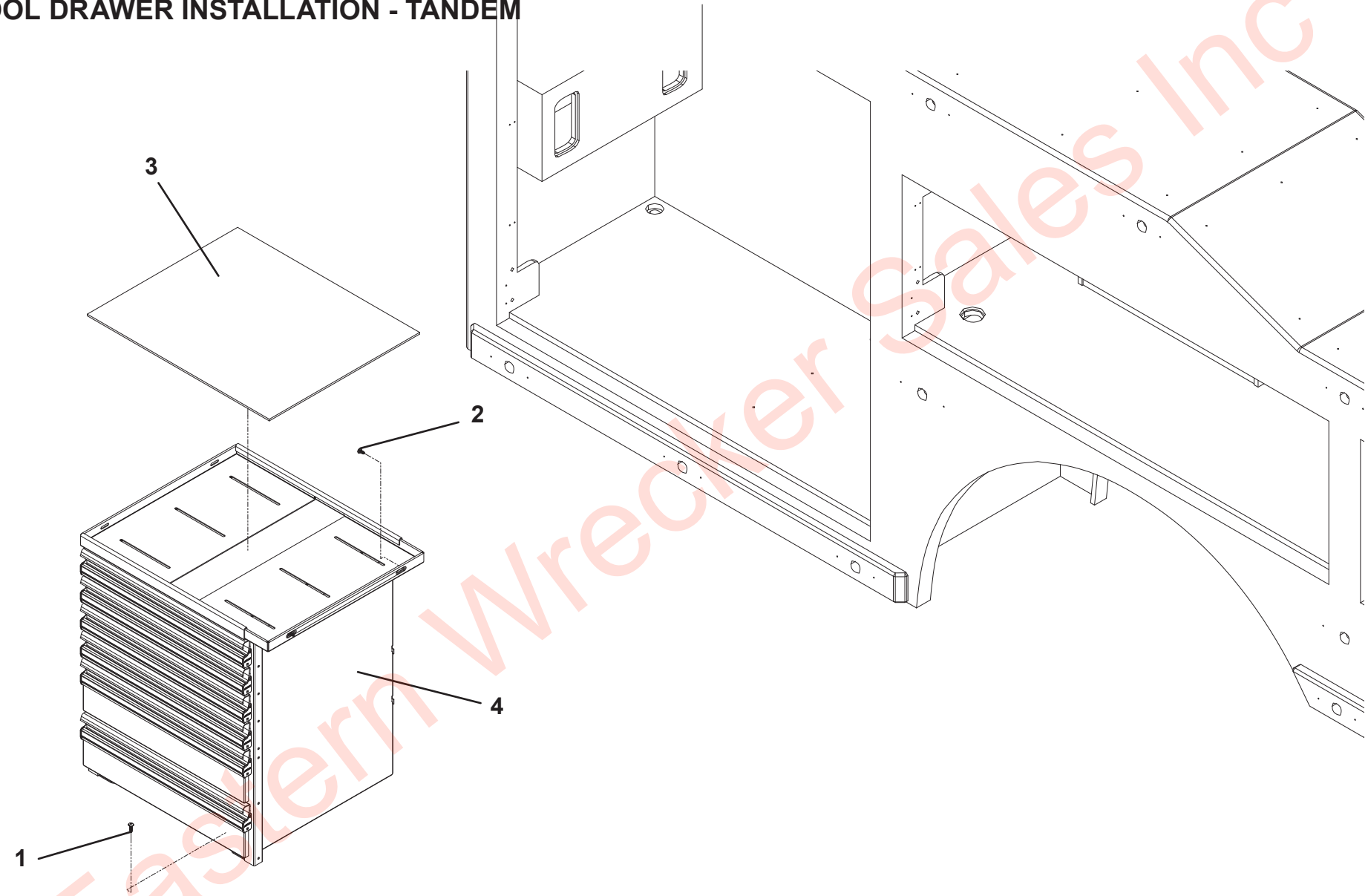

Eastern Wrecker Sales Inc

TOOL DRAWER INSTALLATION - TRI-AXLE

ITEM	PART NO.	DESCRIPTION	QTY	REV
	1001195337	Tool Drawer Installation - Tri-Axle	Ref	B
1	1001194676	Screw, 0.25” x 0.75”	6	
2	1001195257	Screw, 0.25” x 0.50”	4	
3	1001195341	Pad	1	
4	7114160850	Bolt, 0.38”-16 x 1.00”	2	
5	7950160143	Flatwasher, 0.38” ID	2	
6	1001166644	Nut, 0.38”-16	2	
7	1001190410	ToolBox	1	

Eastern Wrecker Sales Inc

TOOL DRAWER INSTALLATION - TRI-AXLE

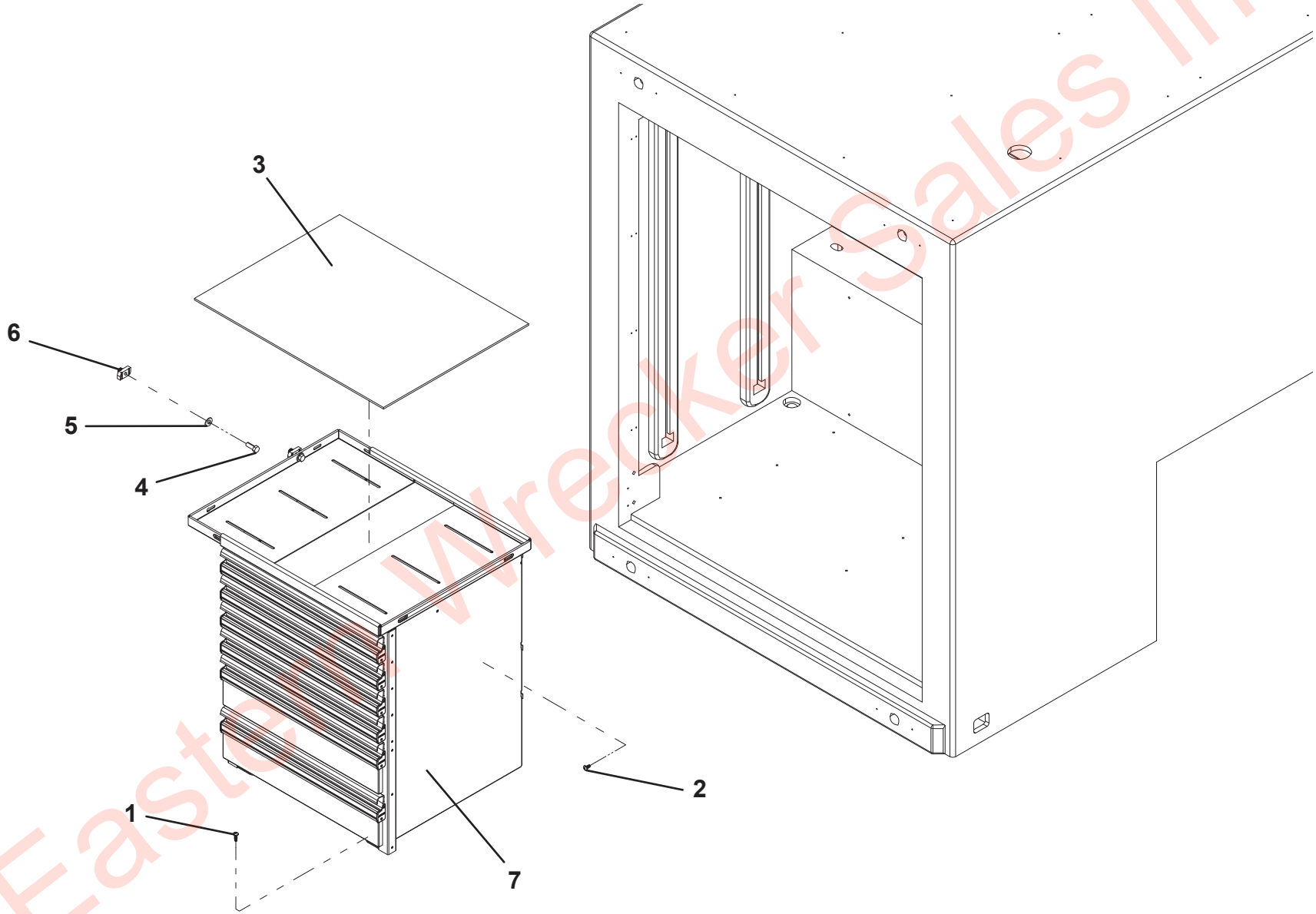

Eastern Wrecker Sales Inc

UNDERLIFT TOOLS - 5TH WHEEL INSTALLATION

ITEM	PART NO.	DESCRIPTION	QTY	REV
	2503880033	Underlift Tools - 5th Wheel Installation	Ref	C
1	3178000240	Bracket	1	
2	3178000499	Bracket	1	
3	3706000080	Plate	1	
4	3691000144	Pin	1	
5	3691000144	Pin	1	
6	7118267250	Capscrew, 1.00” - 8UNC x 9.00”	2	
7	7120000036	Capscrew, 0.75” - 10UNC x 3.25”	2	
8	7691000025	Pin	2	

Eastern Wrecker Sales Inc

UNDERLIFT TOOLS - 5TH WHEEL INSTALLATION

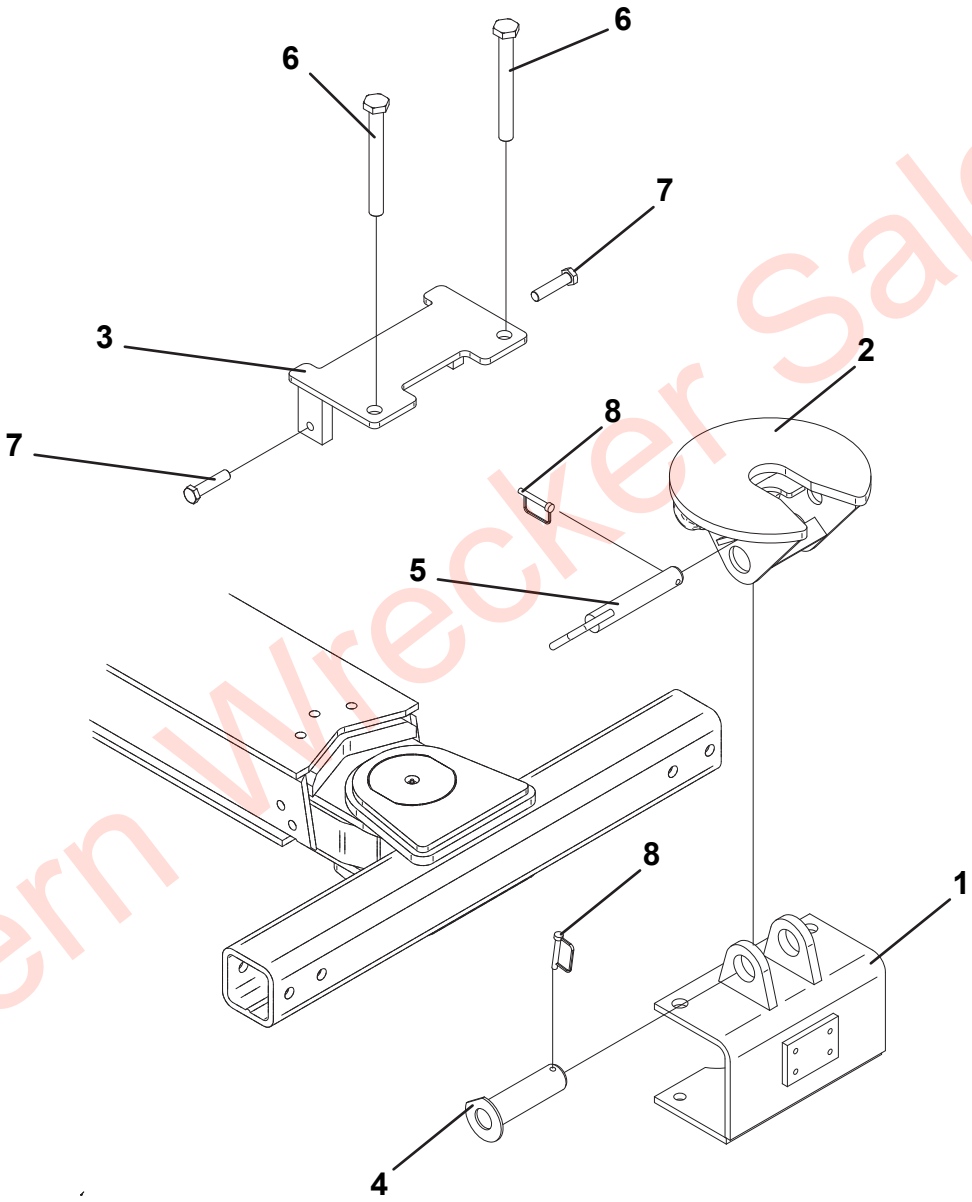

Eastern Wrecker Sales Inc

UNDERLIFT TOOLS - FRAME FORKS

ITEM	PART NO.	DESCRIPTION	QTY	REV
	2503870011	Underlift Tools - Frame Forks	Ref	G
1	3007000004	Chain Hook Adapter	2	
2	7007000056	Frame Fork Adapter, RH	1	
3	7007000055	Frame Fork Adapter, LH	1	
4	3178000226	Spring Lift Bracket	2	
5	7454000006	Fork, 3.00” Short	2	
6	7454000005	Fork, 3.00” Medium	2	
7	7454000003	Fork, 4.50” Medium	2	
8	7454000004	Fork, 4.50” Long	2	
9	3551000036	T-Handle	2	
10	7691000022	Pin	2	
11	7691000021	Pin	2	
12	1001159568	Strap (Not Shown)	1	
13	1001198300	Pin	2	

Eastern Wrecker Sales Inc

UNDERLIFT TOOLS - FRAME FORKS

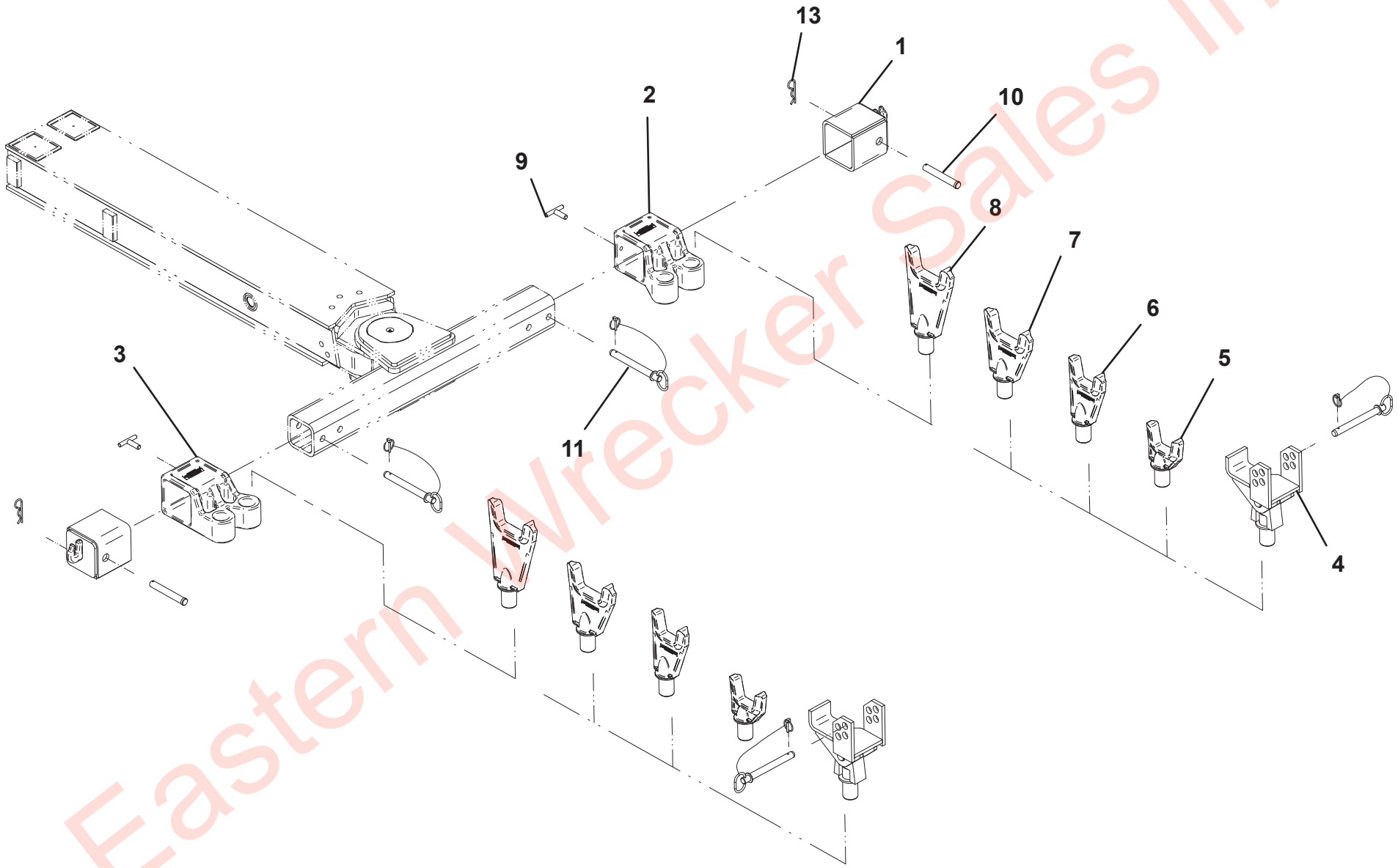

Eastern Wrecker Sales Inc

UNDERLIFT TOOLS - 14,000 LB TIRE LIFT

ITEM	PART NO.	DESCRIPTION	QTY	REV
	2503880088	Underlift Tools - 14,000 Lb Tire Lift	Ref	C
1	3484000048	Tire Lift Grid - RH	1	
2	3484000049	Tire Lift Grid - LH	1	
3	3020000120	Tire Lift Arm Weldment - RH	1	
4	3020000119	Tire Lift Arm Weldment - LH	1	
5	3912000038	Tire Lift Tube Weldment	2	
6	3561000008	Hook	4	
7	4561000012	Pull Hook	1	
8	7894000037	Strap	2	
9	7894000028	Rachet Strap	4	
10	7691000026	Hitch Pin	2	
11	4691000274	Pin	4	
12	7691000020	Hairpin	4	
13	7330000278	Decal, Caution	2	
14	1001132268	Decal, Rating	2	
15	7759000004	Pop Rivet	8	

Eastern Wrecker Sales Inc

UNDERLIFT TOOLS - 14,000 LB TIRE LIFT

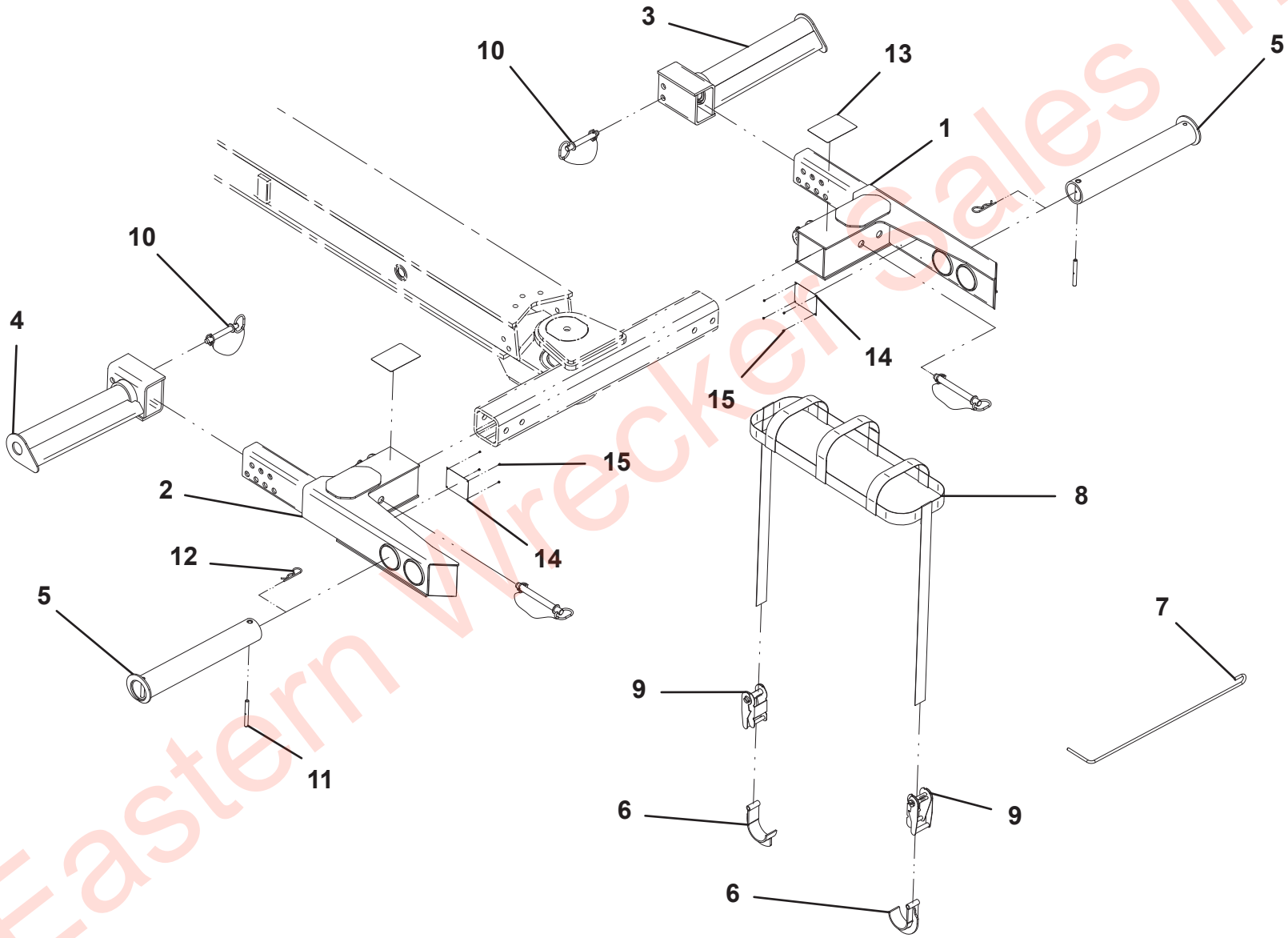

Eastern Wrecker Sales Inc

UNDERLIFT TOOLS - 25,000 LB TIRE LIFT

ITEM	PART NO.	DESCRIPTION	QTY	REV
	2502880300	Underlift Tools - 25,000 Lb Tire Lift	Ref	C
1	3484000072	Tire Lift Grid - LH	1	
2	3484000073	Tire Lift Grid - RH	1	
3	3020000119	Tire Lift Arm Weldment - LH	1	
4	3020000120	Tire Lift Arm Weldment - RH	1	
5	3912000033	Tire Lift Tube Weldment	2	
6	7691000026	Hitch Pin	2	
7	4691000274	Pin	4	
8	7691000020	Hairpin	4	
9	7330000278	Decal, Caution	2	
10	1001132265	Decal, Rating	2	
11	7759000004	Pop Rivet	8	
12	4561000012	Pull Hook	1	
13	7577000368	Strap	1	
14	3912000038	Tube Weldment	2	
15	3561000008	Hook	4	
16	7894000037	Strap	2	
17	7894000028	Rachet Strap	4	

Eastern Wrecker Sales Inc

UNDERLIFT TOOLS - 25,000 LB TIRE LIFT

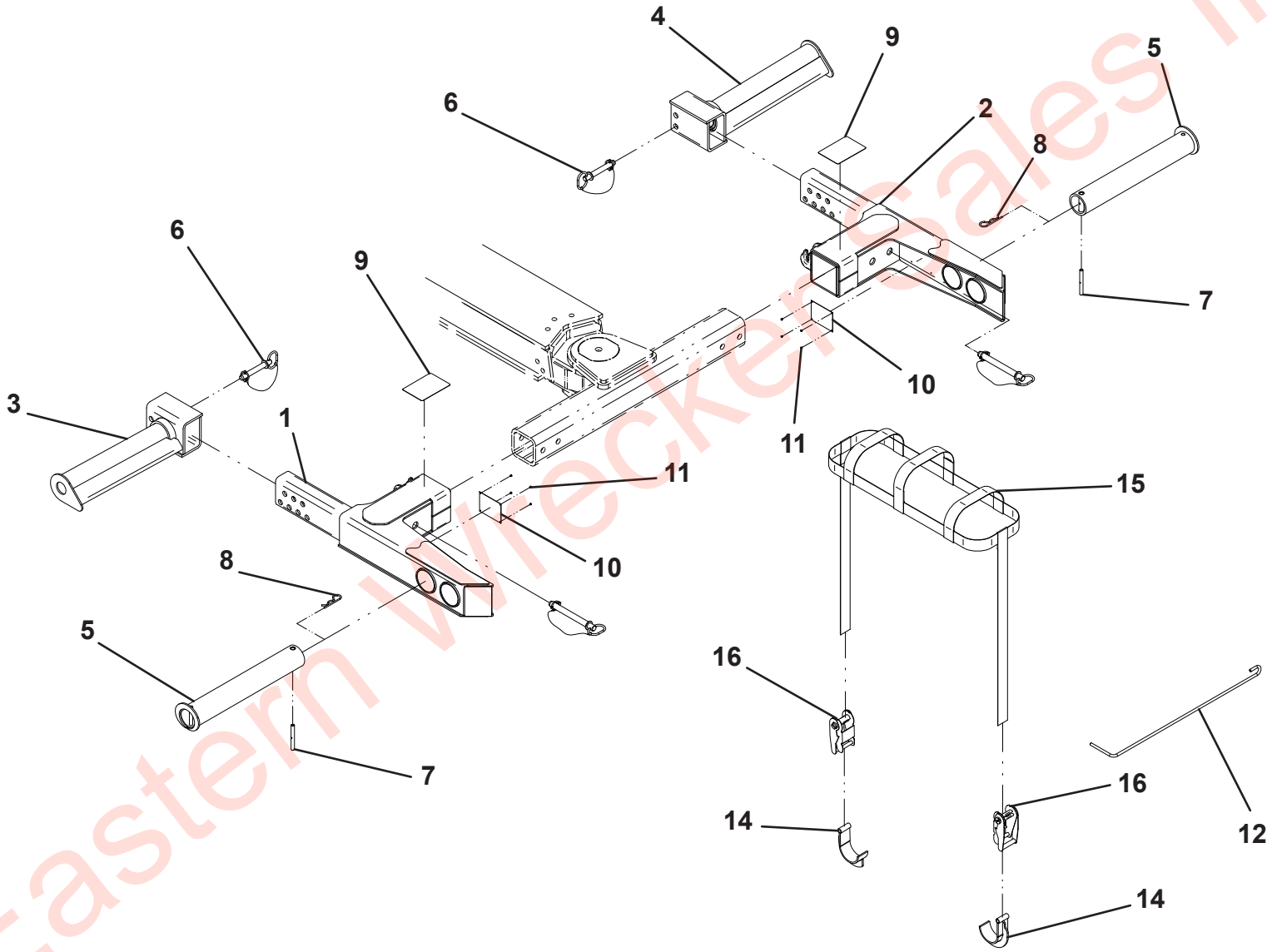

Eastern Wrecker Sales Inc

UNDERLIFT TOOLS - PINTLE HOOK

ITEM	PART NO.	DESCRIPTION	QTY	REV
	2503880043	Underlift Tools - Pintle Hook	Ref	A
1	7561000020	Hitch, Pintle Hook with 2” Dia. Ball	1	
2	7118181250	Capscrew, 0.50”-13NC x 1.50”	4	
3	7950180000	Lockwasher, 0.50” ID	4	
4	7056000003	Ball, 1.88” Dia	1	
	7056000004	Ball, 2.00” Dia		
	7056000005	Ball, 2.31” Dia		
	7056000006	Ball, 50mm Dia		

Eastern Wrecker Sales Inc

UNDERLIFT TOOLS - PINTLE HOOK

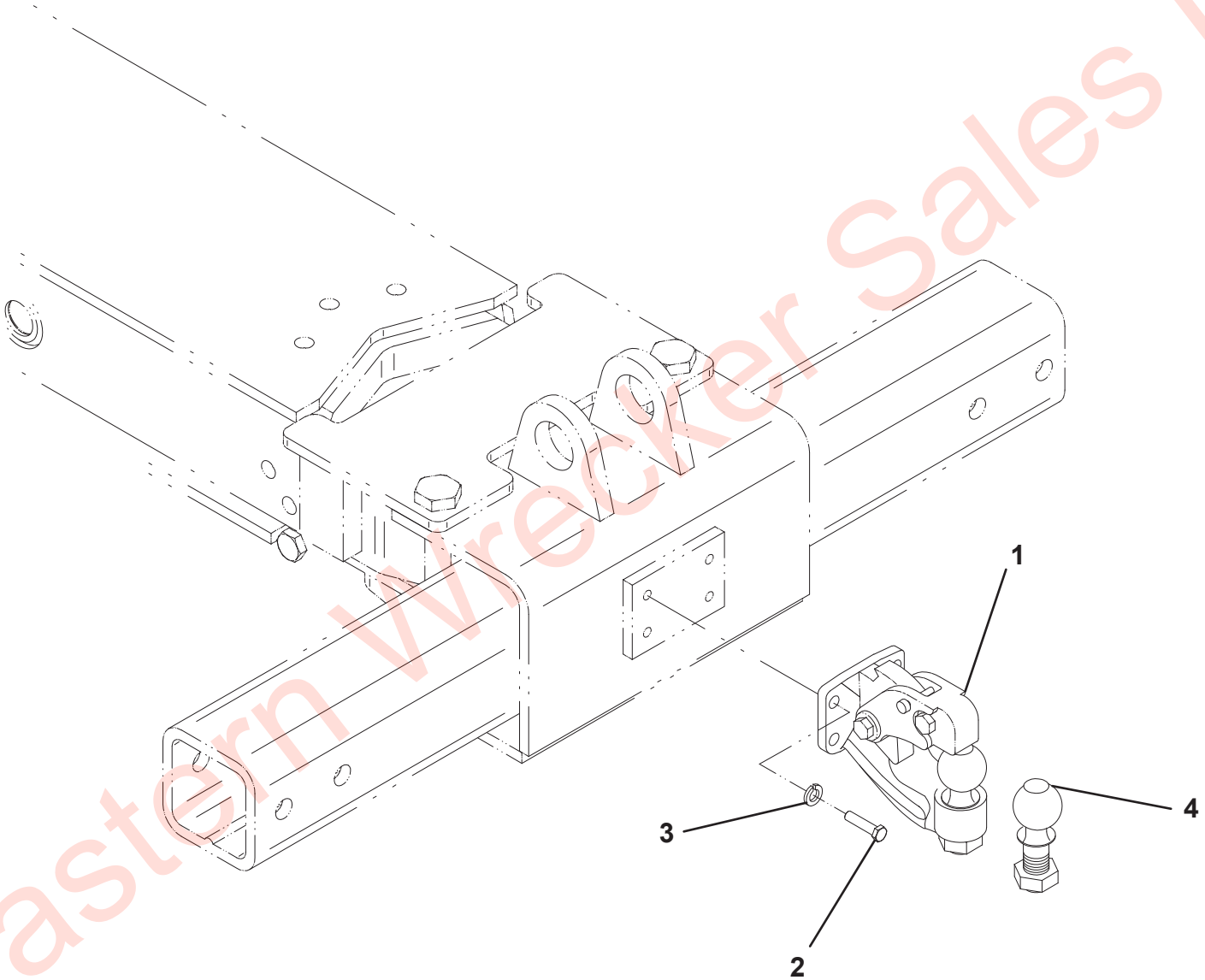

Eastern Wrecker Sales Inc

TRAILER AIR INSTALLATION

ITEM	PART NO.	DESCRIPTION	QTY	REV
	2503630028	Trailer Air Installation	Ref	F
1	7312000015	Gladhand	1	
2	7312000016	Gladhand	1	
3	7446502518	Fitting	2	
4	7445060435	Fitting	4	
5	7565000014	Airline	50 FT	
6	7443000148	Bushing	2	
7	7443000146	Elbow	2	
8	7443000145	Bushing	2	
9	7577000145	Seal Kit	1	
10	1001170036	Shield	2	
11	1001171933	Ring	2	

Eastern Wrecker Sales Inc

TRAILER AIR INSTALLATION

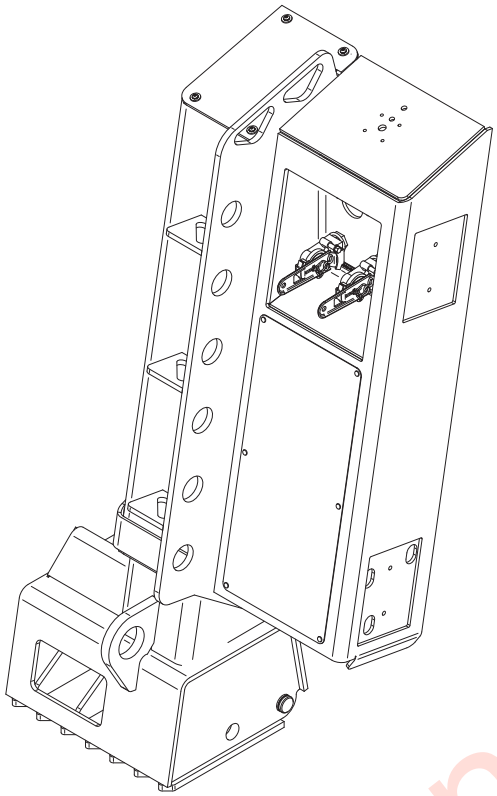

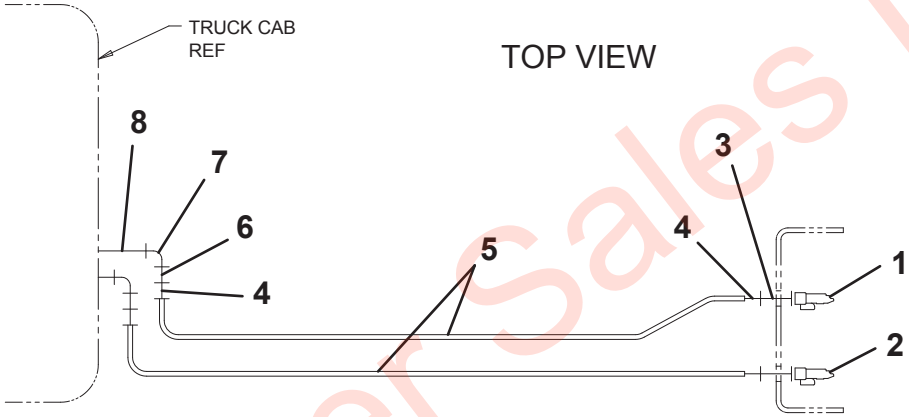

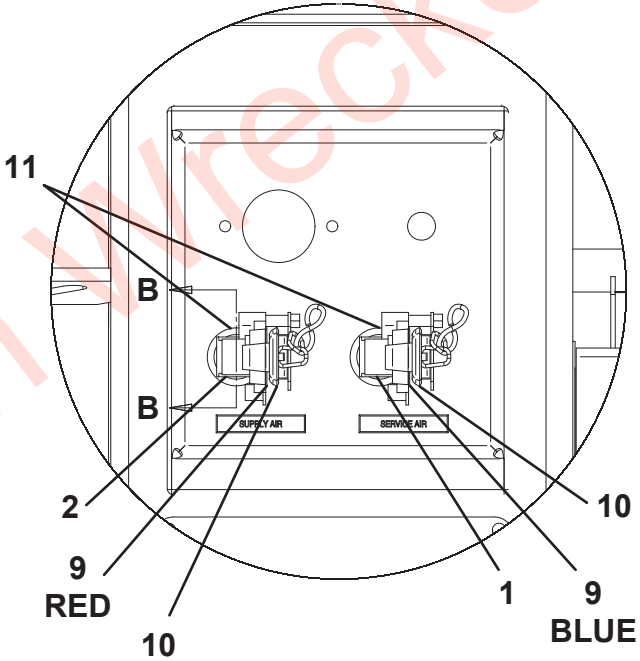

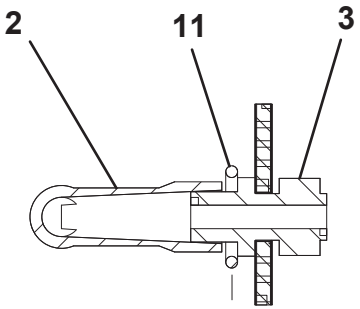

SECTION B-B

Eastern Wrecker Sales Inc

TRAILER PLUG INSTALLATION

ITEM	PART NO.	DESCRIPTION	QTY	REV
	2502330145	Trailer Plug Installation	Ref	C
1	7346000055	7-Way Plug	1	
2	7346000078	7-Way Plug Boot	1	
3	7115150864	Bolt, 0.31"-18NC x 1.00"	2	
4	7950150161	Flatwasher, 0.31" ID	2	
5	7660152601	Locknut, 0.31”-18NC	2	

Eastern Wrecker Sales Inc

TRAILER PLUG INSTALLATION

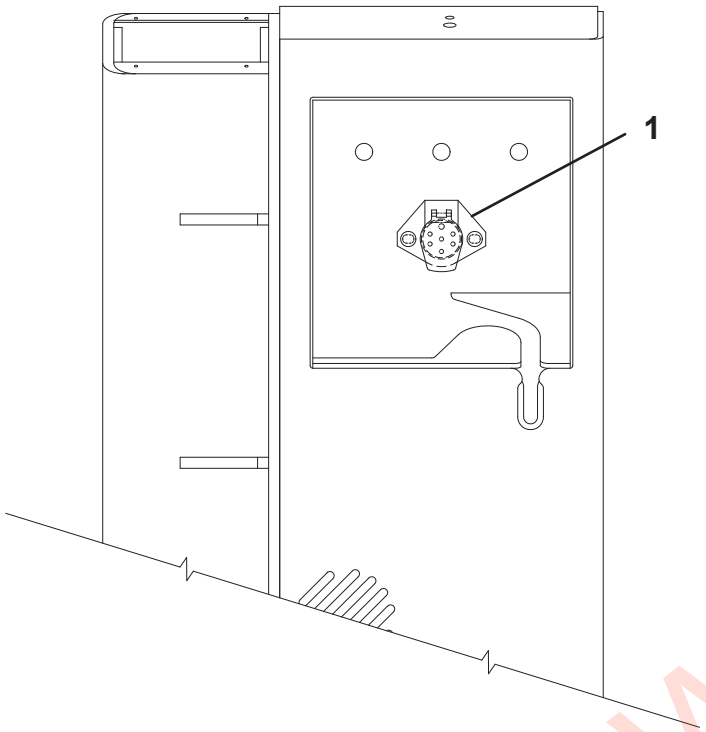

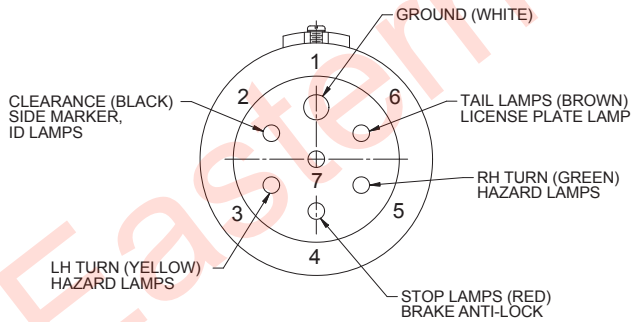

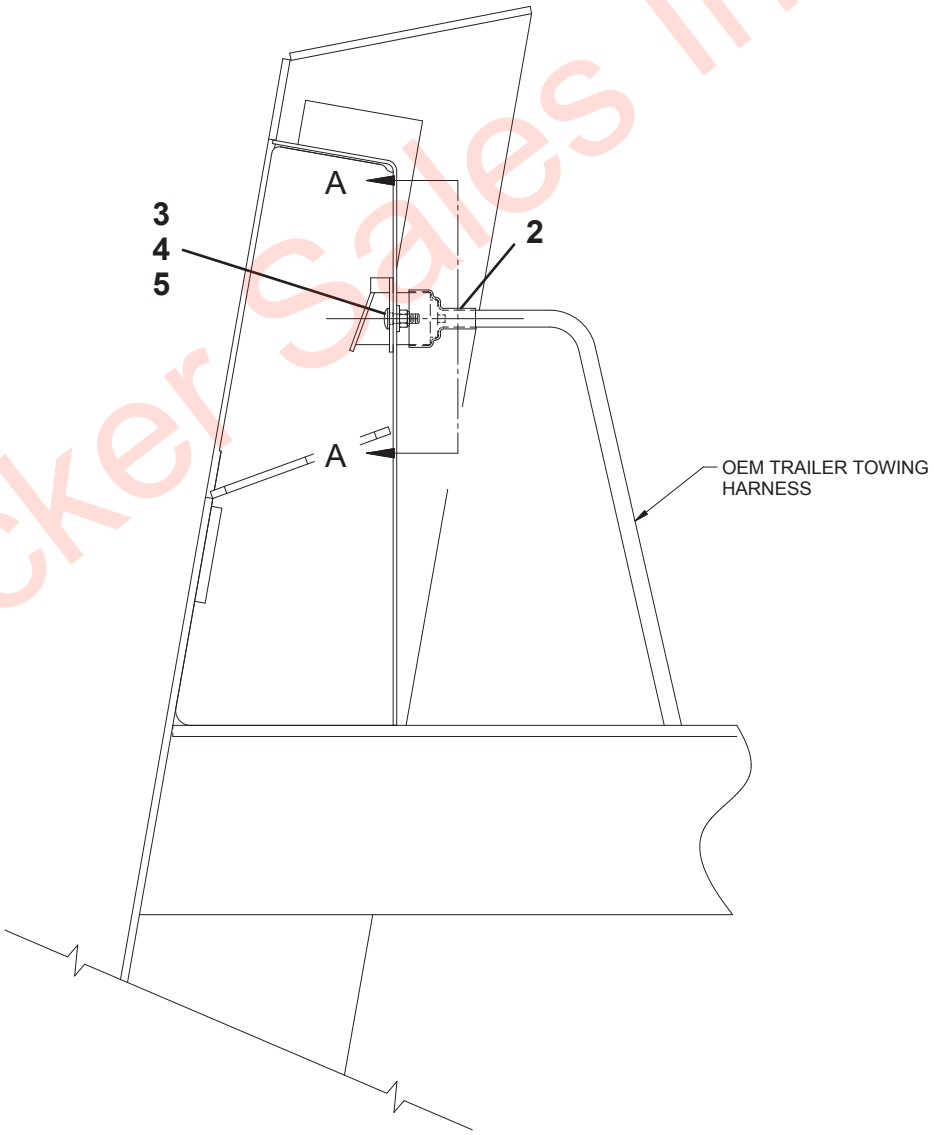

Eastern Wrecker Sales Inc

TOOL STORAGE

ITEM	PART NO.	DESCRIPTION	QTY	REV
	1001201234	Tool Storage	Ref	B
1	1001201215	Bracket	1	
2	1001201216	Bracket	1	
3	1001201217	Bracket	1	
4	1001201218	Bracket	2	
5	1001196552	Screw, #8 x 0.75”	2	
6	1001201366	Screw, #10 x 1.00”	4	
7	1001201367	Screw, 0.25” x 1.00”	11	

Eastern Wrecker Sales Inc

TOOL STORAGE

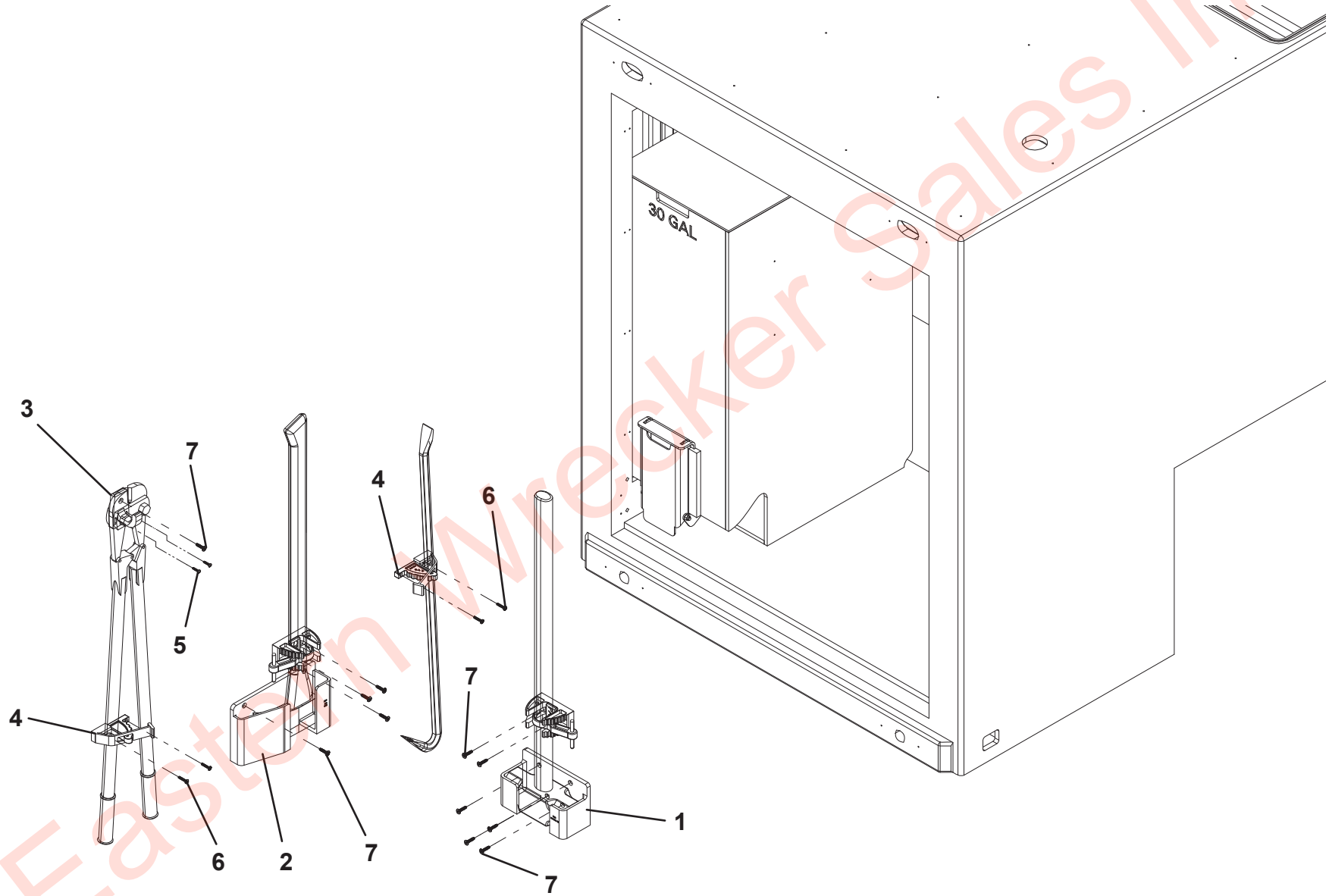

Eastern Wrecker Sales Inc

TILT DOWN STORAGE TRAY - TANDEM

ITEM	PART NO.	DESCRIPTION	QTY	REV
	1001199998	Tilt Down Storage Tray - Tandem	Ref	B
1	3020029	Bearing Grease	A/R	
2	1001169080	Screw, 0.38"-16 X 1.25"	36	
3	1001170090	Decal	3	
4	1001170091	Decal	3	
5	1001170305	Bolt, #6-20	12	
6	1001170307	Washer, M6 ID	12	
7	1001170310	Nut, M6	12	
8	1001170328	Screw, M8-50	12	
9	1001170329	Washer, M8 ID	12	
10	1001170330	Nut, M8	12	
11	1001170331	Roller Assembly	3	
12	1001170332	Latch	3	
13	1001179349	Strap (Not Shown)	6	
14	1001182841	Tilt-Down Drawer	3	
15	1001183735	Bracket, RH	3	
16	1001183736	Bracket, LH	3	
17	7114160850	Screw, 0.38"-16 X 1.00" (Not Shown)	12	
18	7660162601	Locknut, 0.38"-16NC (Not Shown)	12	
19	7950160141	Flatwasher, 0.38" ID	48	
20	1001166644	Nut, 0.38"-16	36	
21	1001170428	Strap	6	
22	1001200997	Screw, M5X25	12	

Eastern Wrecker Sales Inc

TILT DOWN STORAGE TRAY - TANDEM

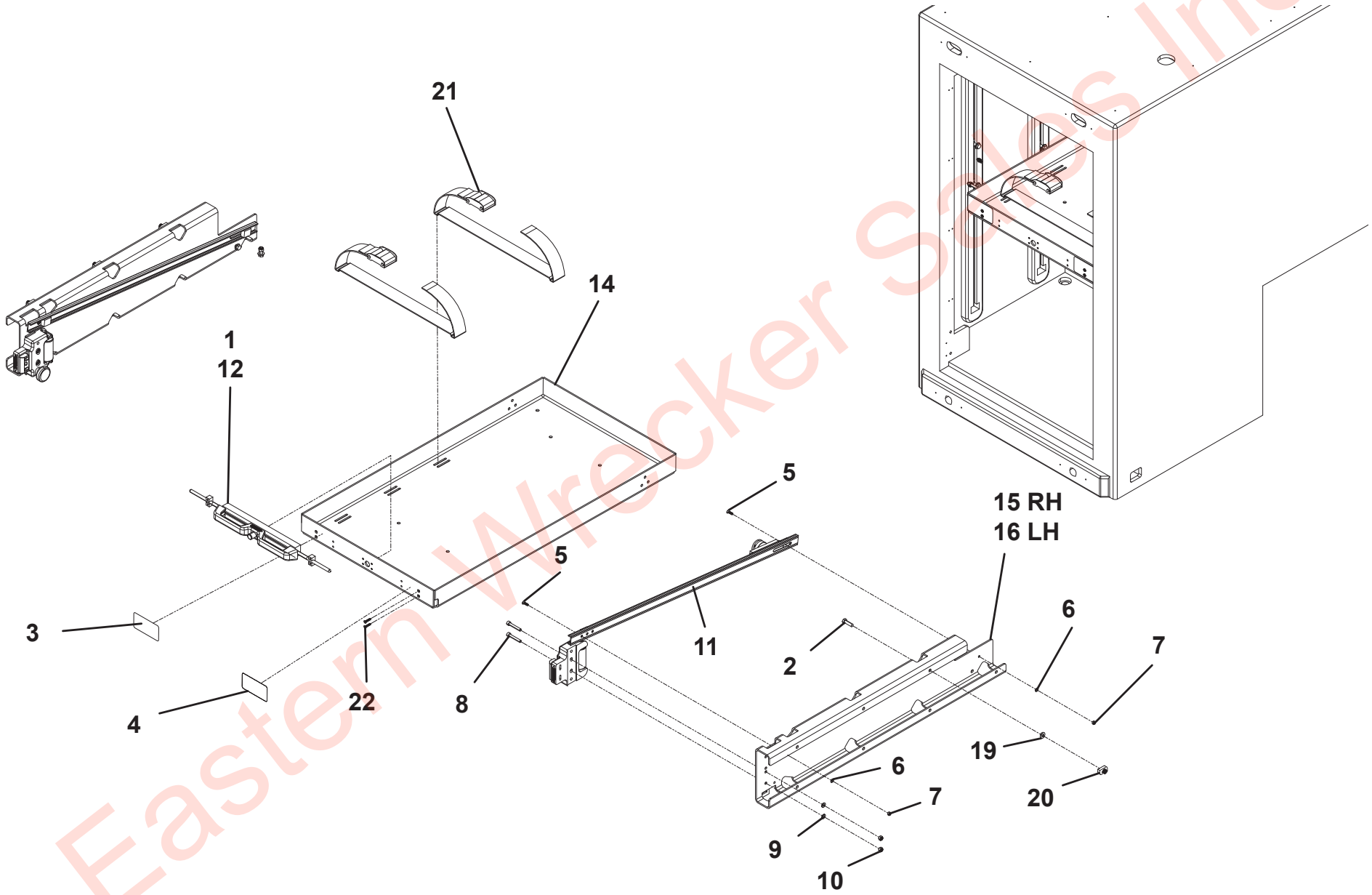

Eastern Wrecker Sales Inc

TILT DOWN STORAGE TRAY - TRI-AXLE

ITEM	PART NO.	DESCRIPTION	QTY	REV
	1001199999	Tilt Down Storage Tray - Tri-Axle	Ref	B
1	3020029	Bearing Grease	A/R	
2	1001169080	Screw, 0.38"-16 X 1.25"	36	
3	1001170090	Decal	3	
4	1001170091	Decal	3	
5	1001170305	Bolt, #6-20	12	
6	1001170307	Washer, M6 ID	12	
7	1001170310	Nut, M6	12	
8	1001170328	Screw, M8-50	12	
9	1001170329	Washer, M8 ID	12	
10	1001170330	Nut, M8	12	
11	1001170331	Roller Assembly	3	
12	1001170332	Latch	3	
13	1001179349	Strap (Not Shown)	6	
14	1001197693	Tilt-Down Drawer	3	
15	1001183735	Bracket, RH	3	
16	1001183736	Bracket, LH	3	
17	7114160850	Screw, 0.38"-16 X 1.00" (Not Shown)	12	
18	7660162601	Locknut, 0.38"-16NC (Not Shown)	12	
19	7950160141	Flatwasher, 0.38" ID	48	
20	1001166644	Nut, 0.38"-16	36	
21	1001170428	Strap	6	
22	1001200997	Screw, M5X25	12	

Eastern Wrecker Sales Inc

TILT DOWN STORAGE TRAY - TRI-AXLE

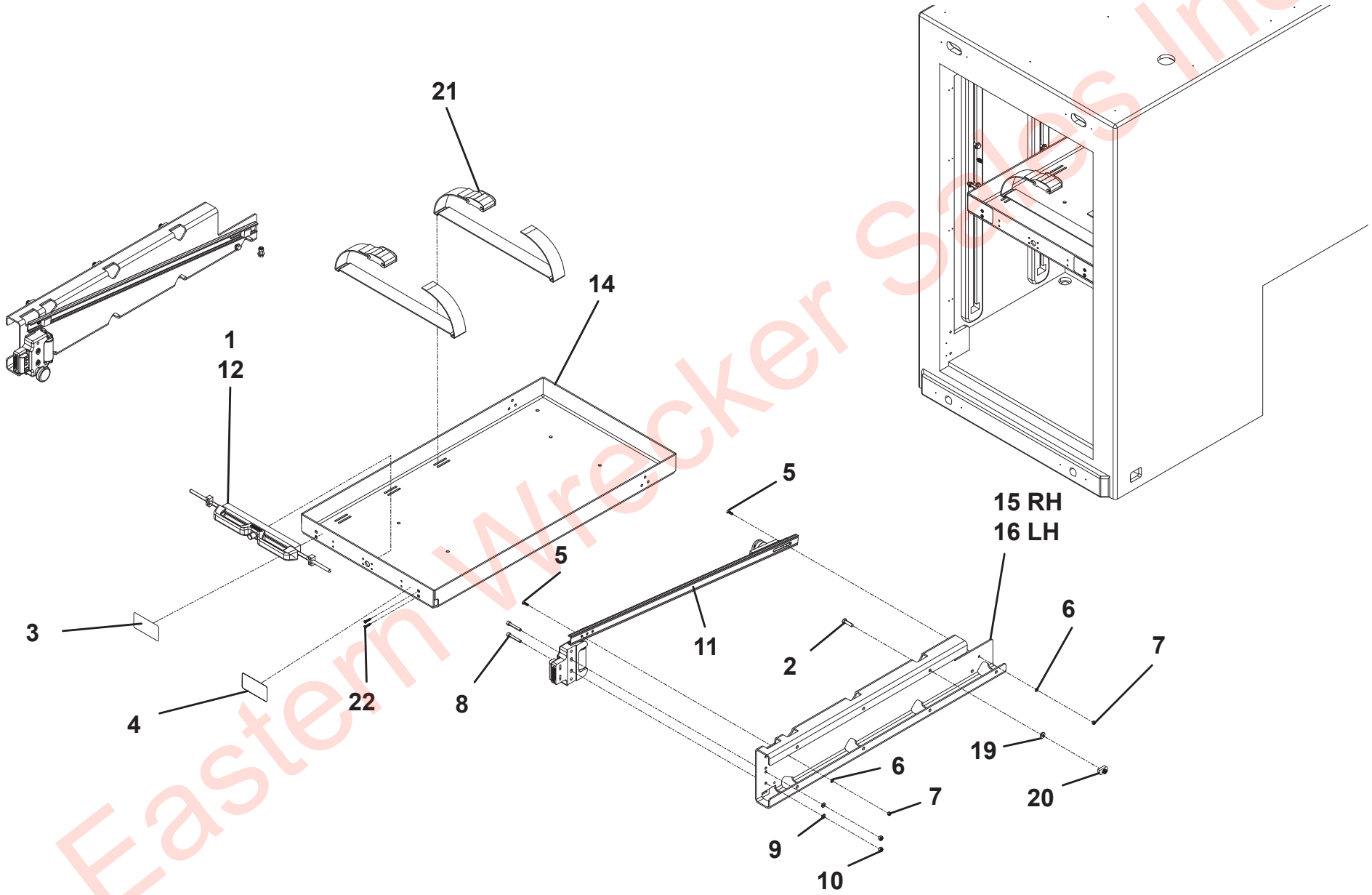

Eastern Wrecker Sales Inc

SNATCH BLOCK STORAGE INSTALLATION - TANDEM

ITEM	PART NO.	DESCRIPTION	QTY	REV
	1001217105	Snatch Block Storage Installation - Tandem	Ref	A
1	1001164560	Bracket, Top	4	
2	1001164562	Bracket, Bottom	4	
3	1001166974	Washer, 0.38"	4	
4	1001168545	Screw, 0.38" X 1.25"	16	
5	1001168733	Nut, 0.25"-20	4	
6	1001168993	Screw, 0.38"-16 X 1.50"	4	
7	7114140618	Nut, 0.25"-20 X 0.75"	4	
8	7660162601	Locknut, 0.38"-16NC	4	
9	7950140003	Lockwasher, 0.25" ID	4	
10	7950140143	Flatwasher, 0.25" ID	4	
11	7950160143	Flatwasher, 0.38" ID	24	
12	1001201112	Bracket	1	

Eastern Wrecker Sales Inc

SNATCH BLOCK STORAGE INSTALLATION - TANDEM

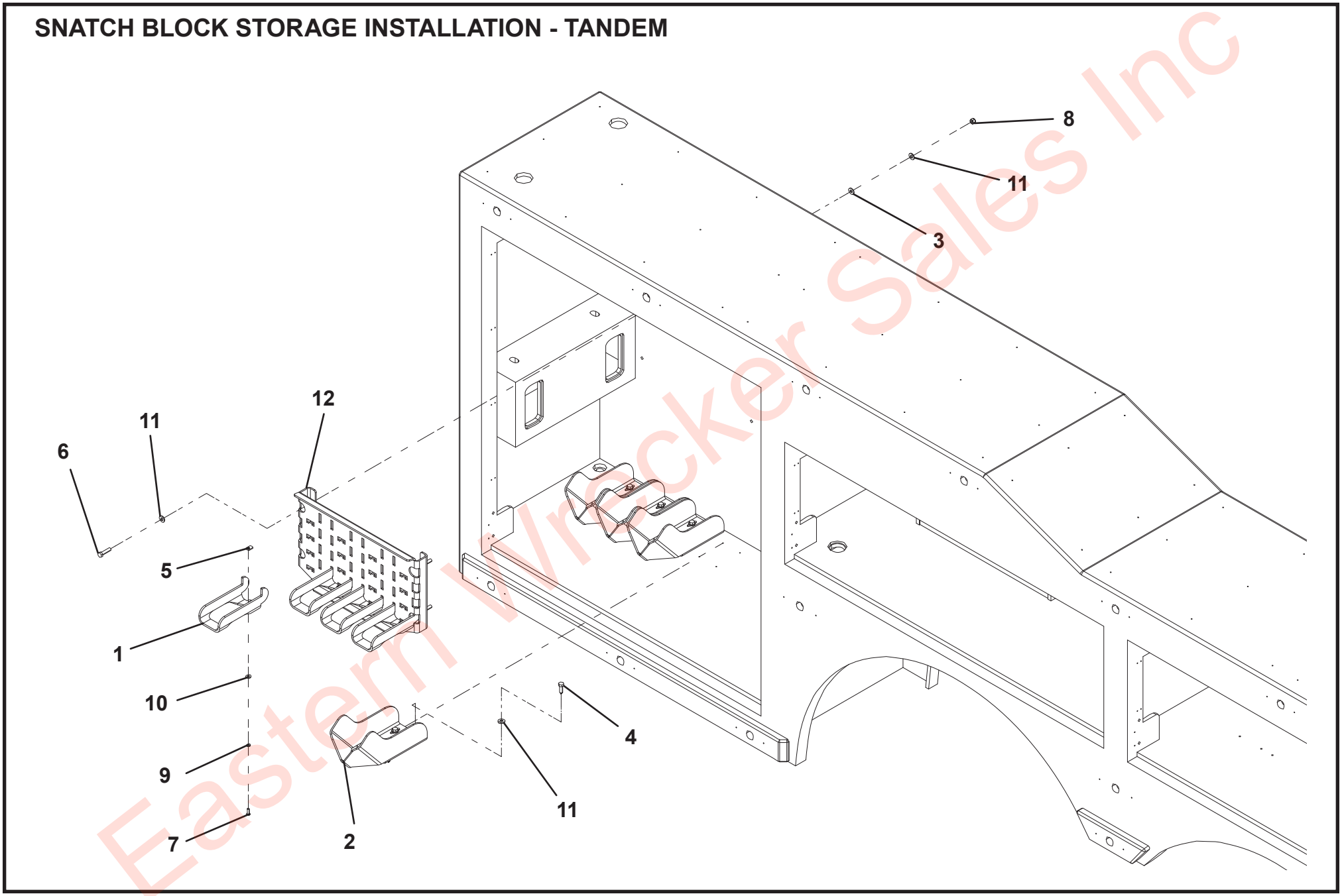

Eastern Wrecker Sales Inc

SNATCH BLOCK STORAGE INSTALLATION - TRI-AXLE

ITEM	PART NO.	DESCRIPTION	QTY	REV
	1001195134	Snatch Block Storage Installation - Tri-Axle	Ref	A
1	3020029	Lube, Bearing Grease	A/R	
2	1001164560	Bracket, Top	4	
3	1001165564	Plate	1	
4	1001165570	Bracket	1	
5	1001165571	Bracket	1	
6	1001165584	Plate	2	
7	1001168733	Nut, 0.25"-20	4	
8	1001169063	Retaining Ring	2	
9	1001169064	Retaining Ring	4	
10	1001169076	Bearing	2	
11	1001169078	Plug	1	
12	1001169080	Screw, 0.38"-16 X 1.25"	18	
13	1001169083	Screw, 0.38"-16 X 2.00"	4	
14	1001190342	Bracket	4	
15	1001190359	Support	1	
16	1001190361	Bracket	1	
17	1001192126	Tube	1	
18	7114140618	Bolt, 0.25"-20 X 0.75"	4	
19	7660162601	Locknut, 0.38"-16NC	20	
20	7690142845	Pin	3	
21	7950140003	Lockwasher, 0.25" ID	4	
22	7950140143	Flatwasher, 0.25" ID	4	
23	7950160143	Flatwasher, 0.38" ID	42	
24	1001166644	Nut, 0.38"-16	2	

Eastern Wrecker Sales Inc

SNATCH BLOCK STORAGE INSTALLATION - TRI-AXLE

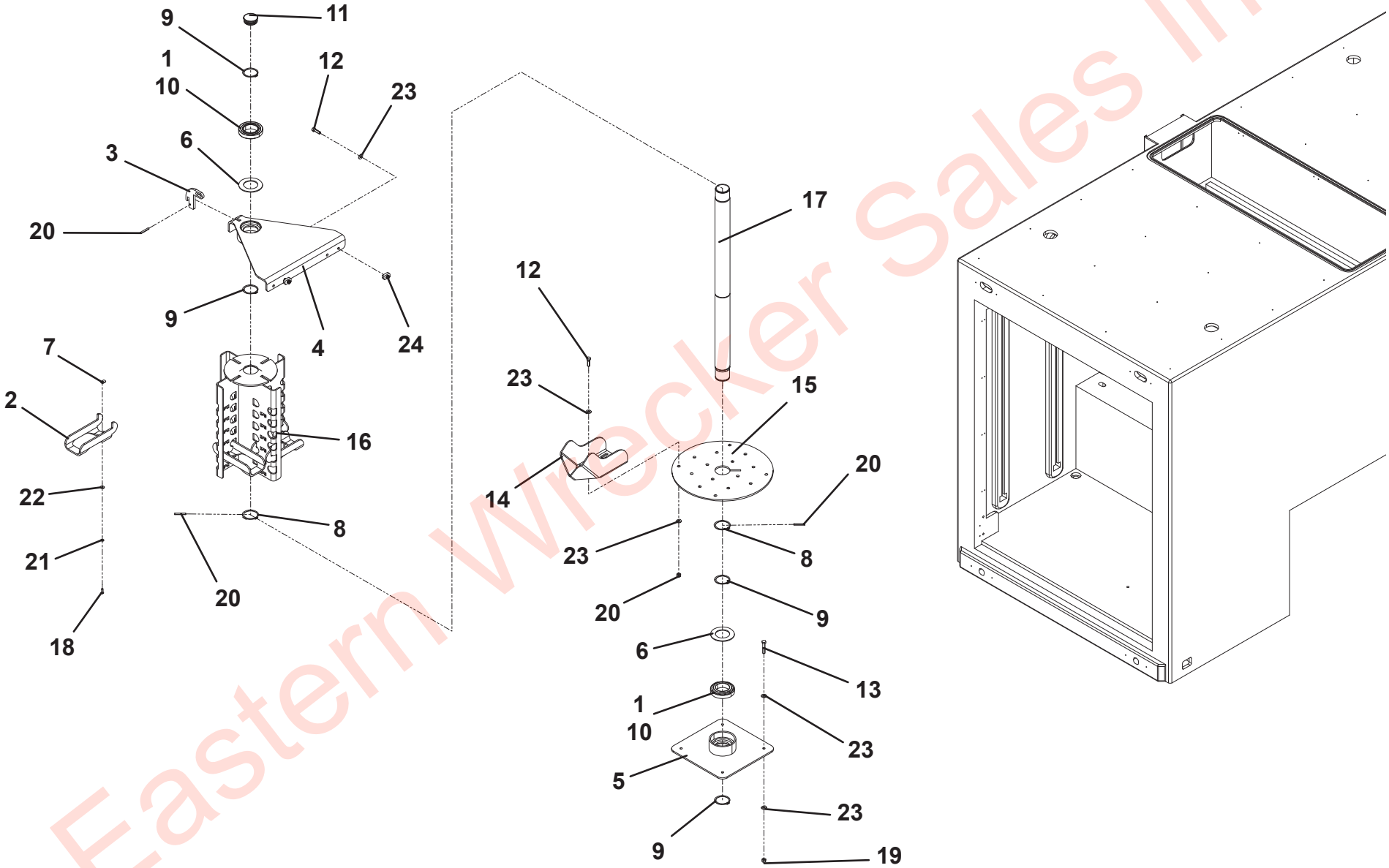

Eastern Wrecker Sales Inc

TIRE LIFT STORAGE - 51” AND 49” TOOLBOX

ITEM	PART NO.	DESCRIPTION	QTY	REV
	1001196249	Tire Lift Storage - 51” & 49” Toolbox	Ref	C
1	1001165862	Channel, Large	1	
2	1001165863	Channel, Small	1	
3	1001168545	Screw, 0.38" X 1.25"	10	
4	1001170968	Pad, Small	1	
5	1001170970	Pad, Large	1	
6	1001170971	Bracket	1	
7	1001190409	Bus Arm Storage	1	
8	7950160143	Flatwasher, 0.38" ID	4	

Eastern Wrecker Sales Inc

TIRE LIFT STORAGE - 51” AND 49” TOOLBOX

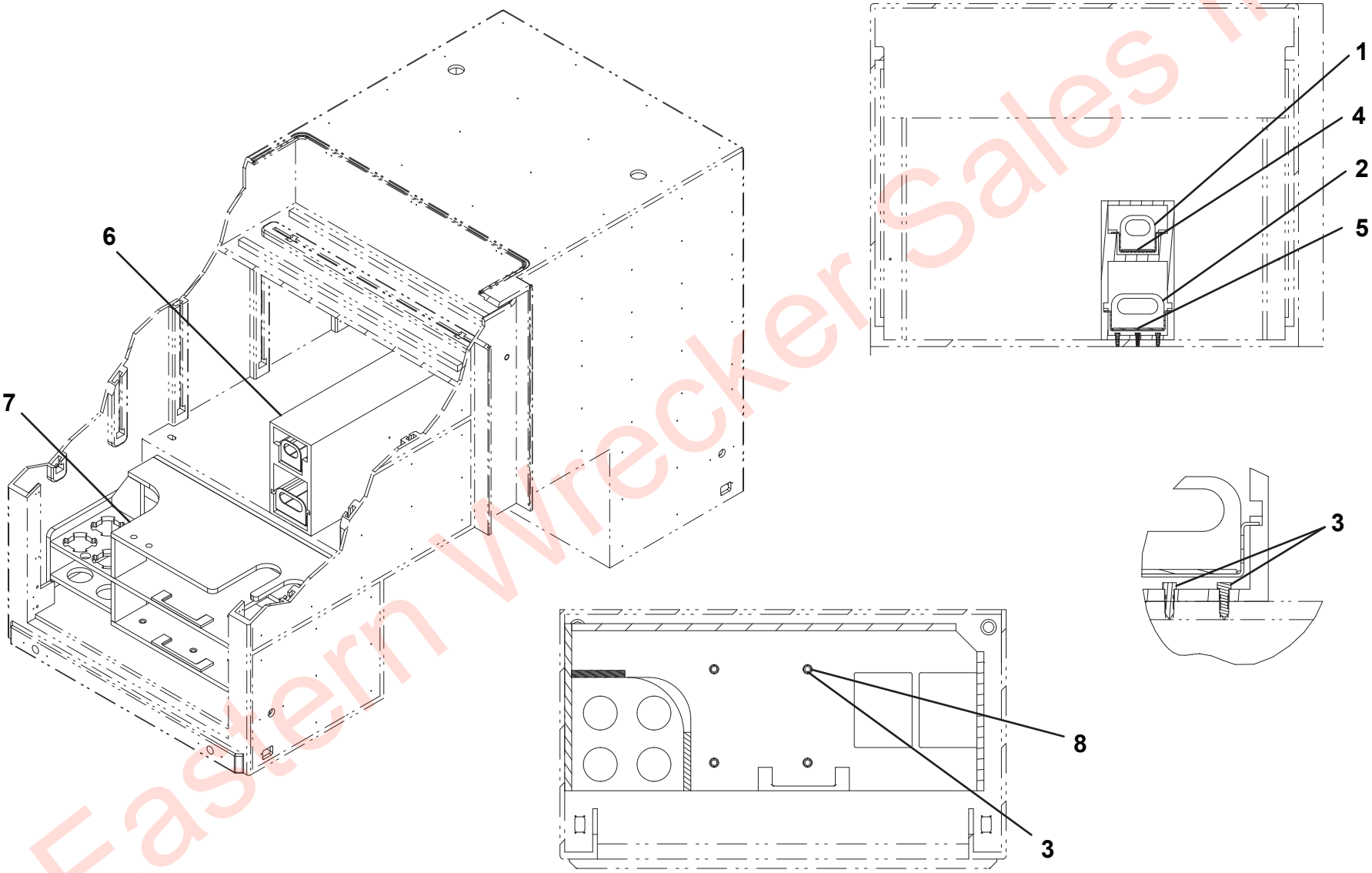

Eastern Wrecker Sales Inc

TIRE LIFT STORAGE - 39” AND 37” TOOLBOX

ITEM	PART NO.	DESCRIPTION	QTY	REV
	1001205796	Tire Lift Storage - 39” & 37” Toolbox	Ref	B
1	1001165862	Tray. Small	1	
2	1001165863	Tray, Large	1	
3	1001168545	Screw, 0.38" X 1.25"	4	
4	1001170968	Pad, Small	1	
5	1001170970	Pad, Large	1	
6	1001170971	Bracket	1	
7	1001192287	Storage	1	
8	7950160143	Flatwasher, 0.38" ID	8	
9	1001190579	Mount	4	
10	7115162050	Screw, 0.38"-16NC X 2.50"	4	
11	7660162601	Locknut, 0.38"-16NC	4	

Eastern Wrecker Sales Inc

TIRE LIFT STORAGE - 39” AND 37” TOOLBOX

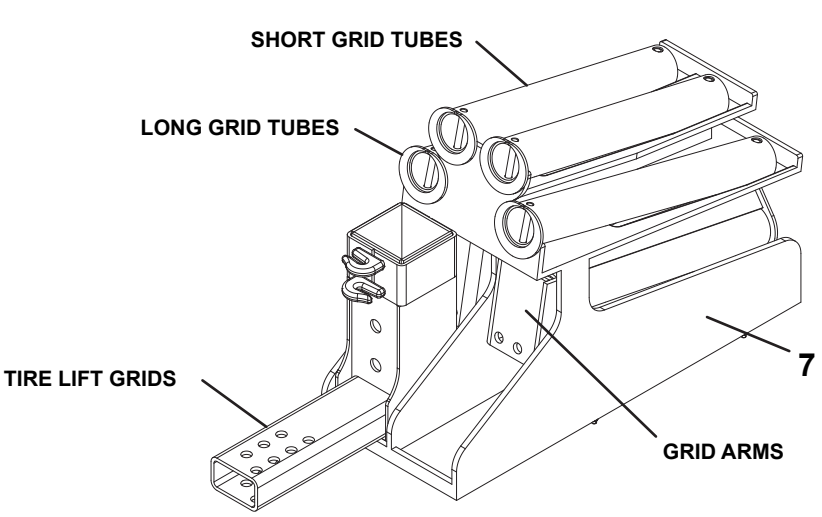

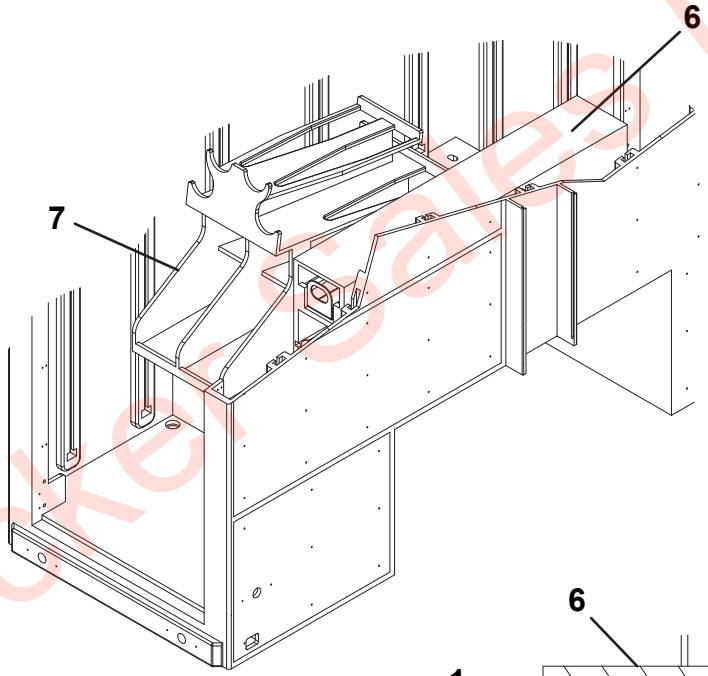

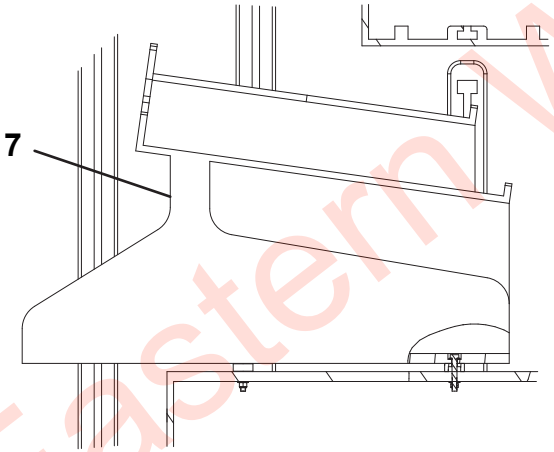

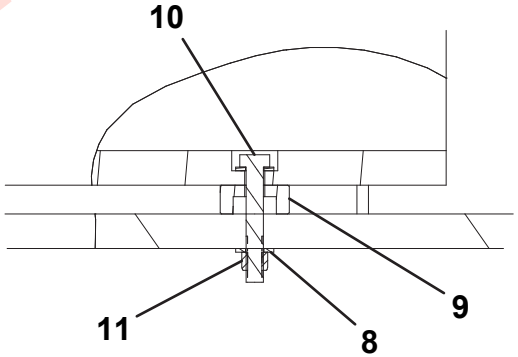

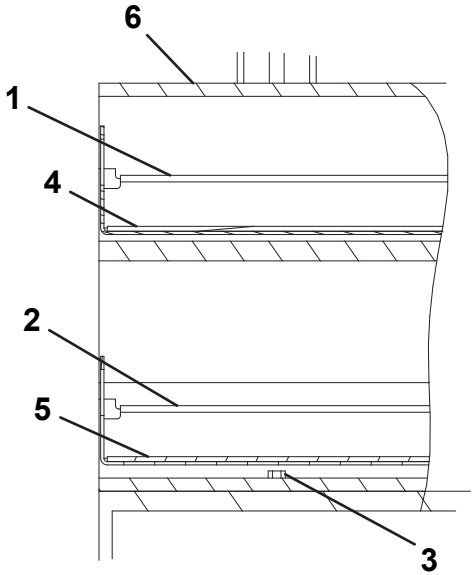

Eastern Wrecker Sales Inc

TRAFFIC CONE STORAGE

ITEM	PART NO.	DESCRIPTION	QTY	REV
	1001195764	Traffic Cone Storage	Ref	A
1	1001168993	Screw, 0.38”-16 x 1.50”	4	
2	1001190551	Bracket	1	
3	7660162601	Locknut, 0.25”-20	4	
4	7950160143	Flatwasher, 0.38” ID	8	

Eastern Wrecker Sales Inc

TRAFFIC CONE STORAGE

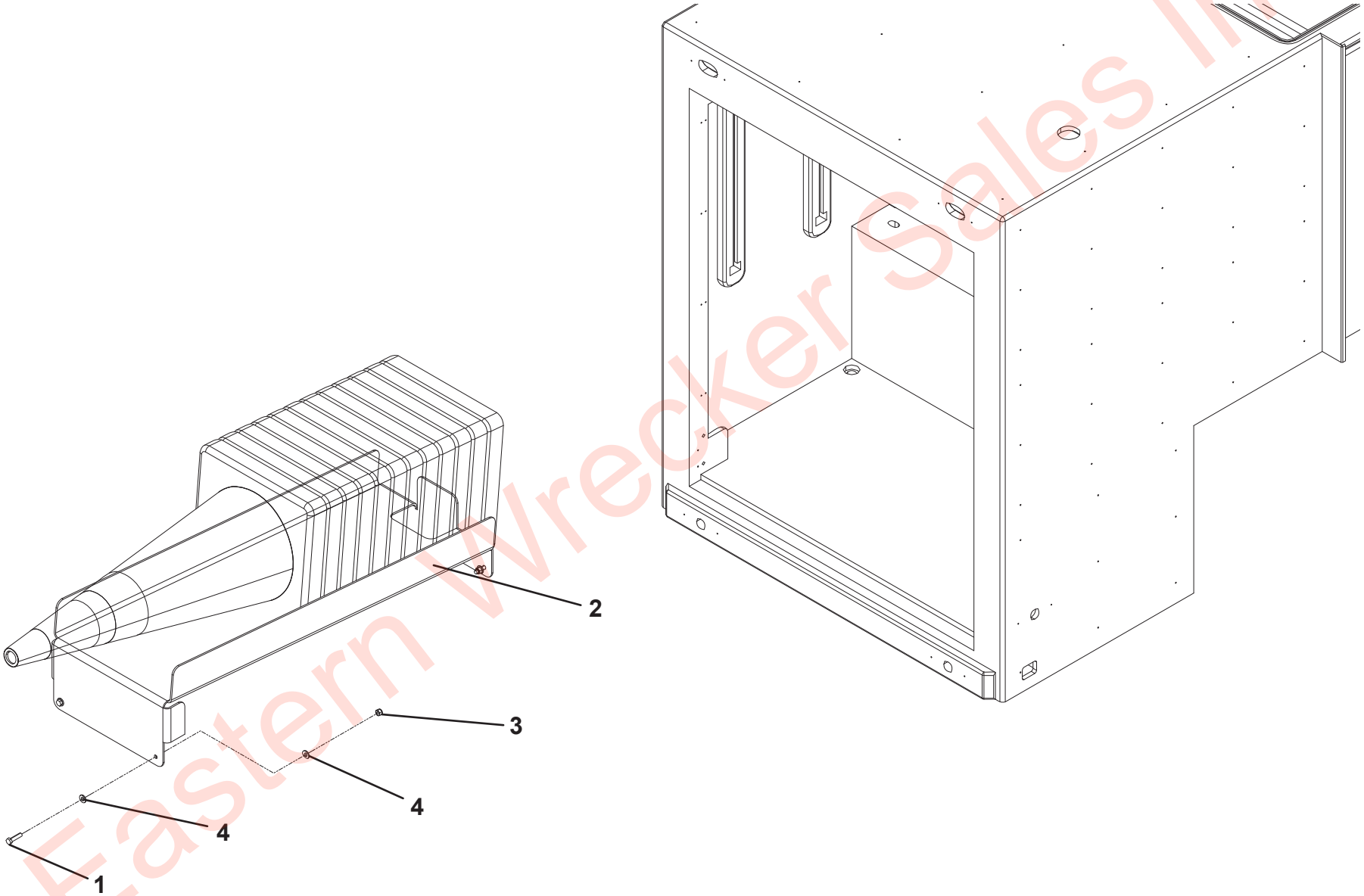

Eastern Wrecker Sales Inc

LADDER STORAGE

ITEM	PART NO.	DESCRIPTION	QTY	REV
	1001200001	Ladder Storage	Ref	B
1	1001183037	Nut, 0.25”-20	2	
2	1001201523	Plate	1	
3	1001201534	Bracket	1	

Eastern Wrecker Sales Inc

LADDER STORAGE

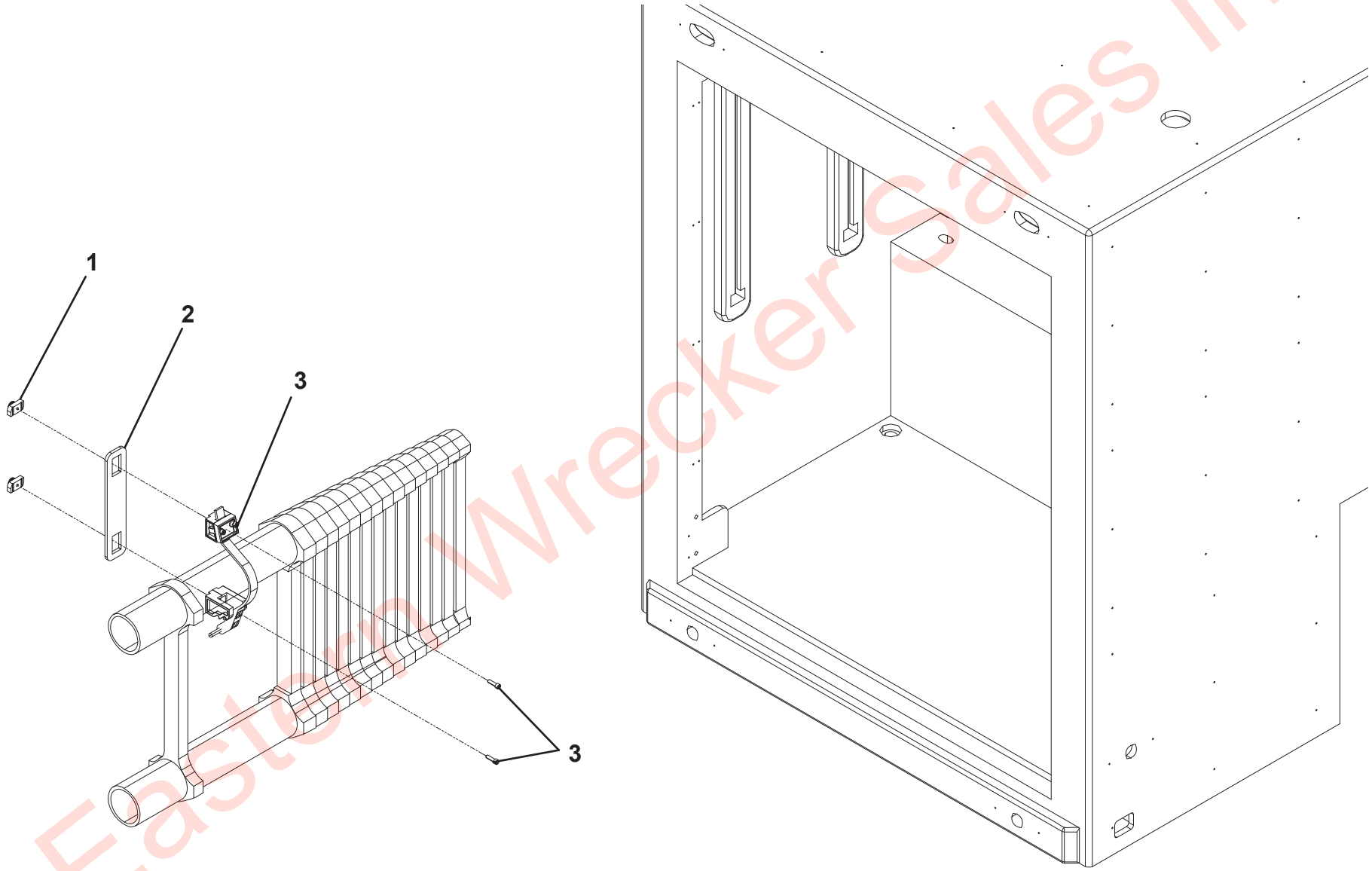

Eastern Wrecker Sales Inc

TOW LIGHT STORAGE

ITEM	PART NO.	DESCRIPTION	QTY	REV
	1001195592	Tow Light Storage	Ref	A
1	1001170618	Bracket	2	
2	1001195523	Screw, 0.25” x 1.00”	4	

Eastern Wrecker Sales Inc

TOW LIGHT STORAGE

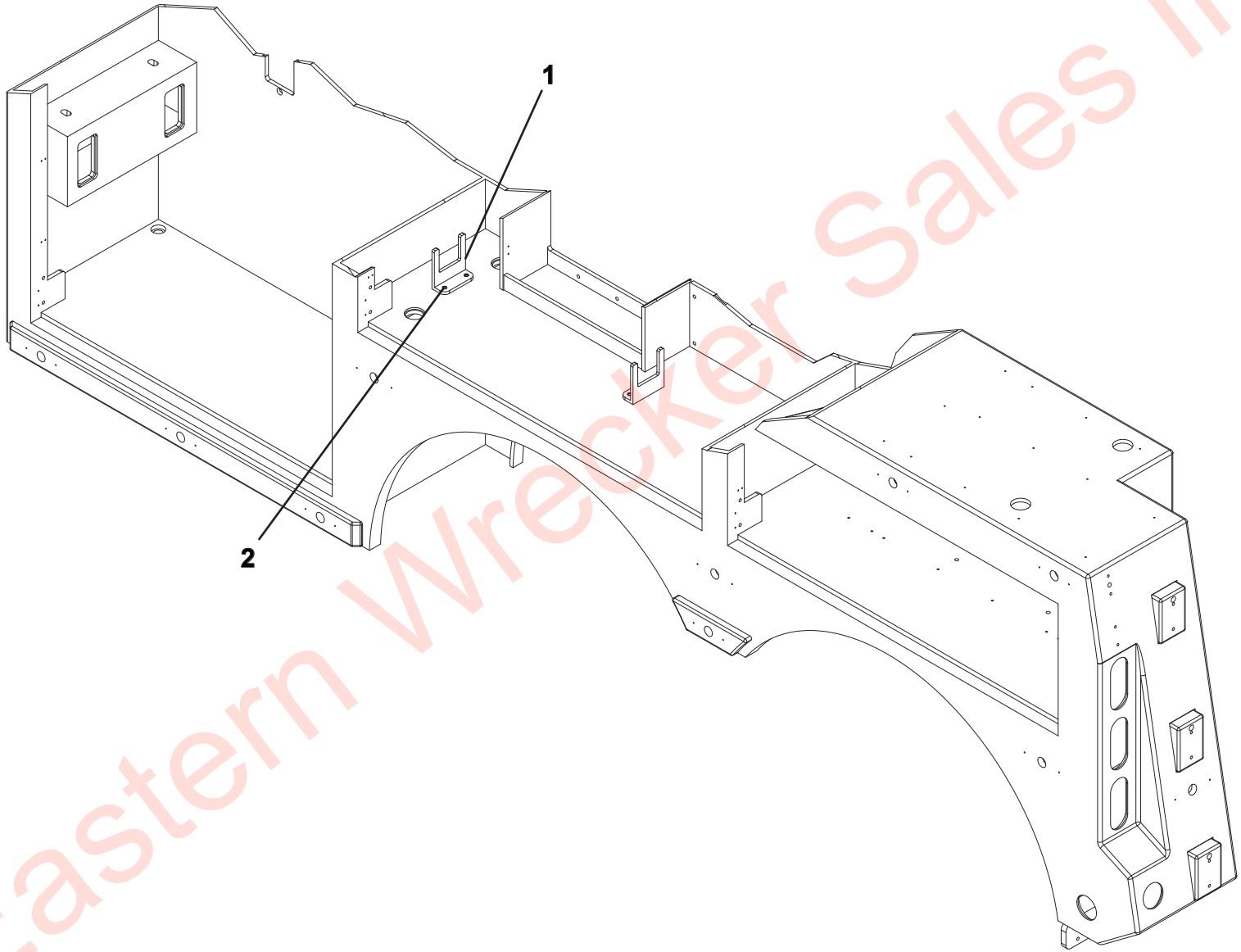

Eastern Wrecker Sales Inc

WHEEL CHOCK STORAGE

ITEM	PART NO.	DESCRIPTION	QTY	REV
	1001195520	Wheel Chock Storage	Ref	B
1	1001170707	Wheel Chock Stop	4	
2	1001195523	Screw, 0.25” x 1.00”	8	

Eastern Wrecker Sales Inc

WHEEL CHOCK STORAGE

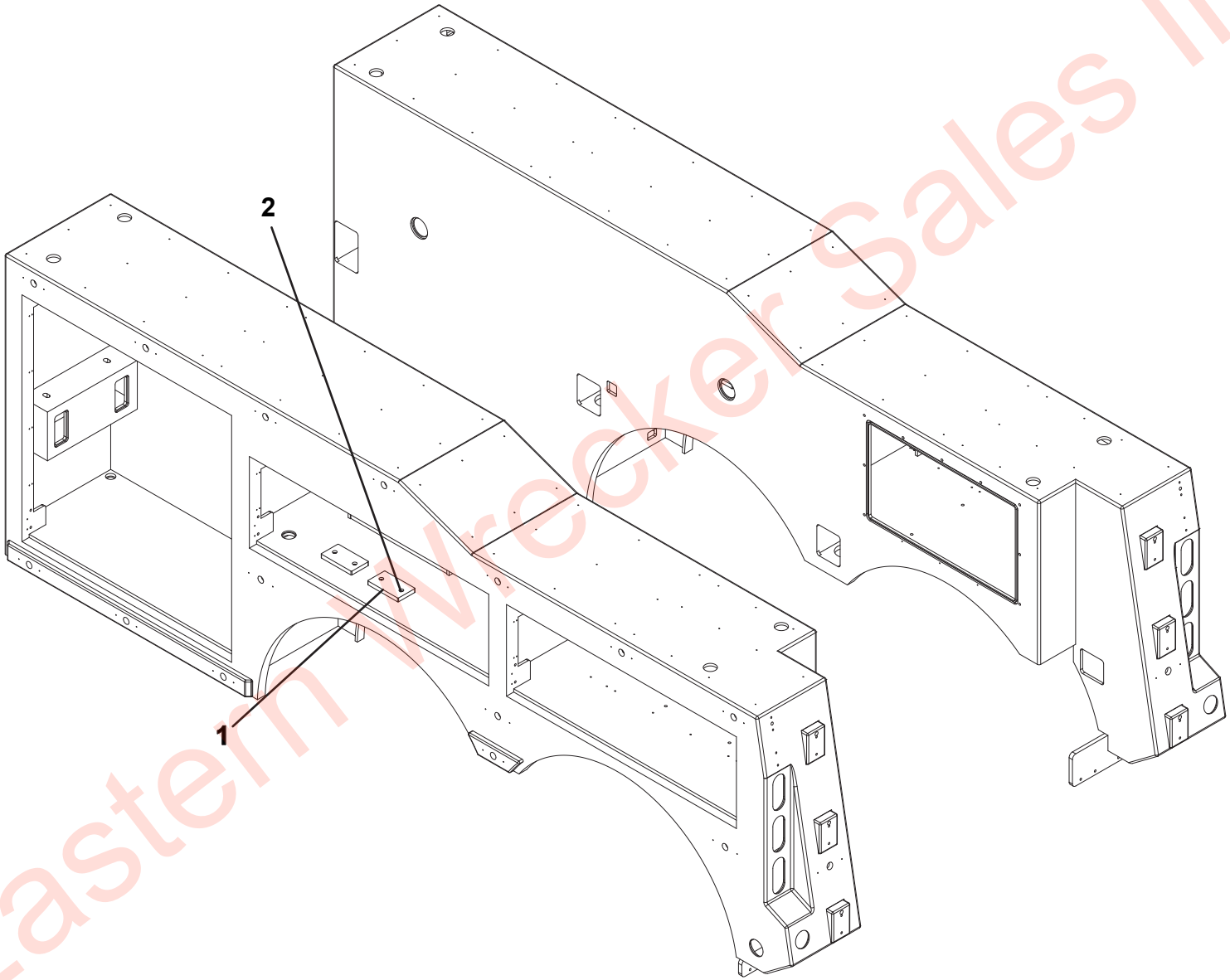

Eastern Wrecker Sales Inc

FLARE STORAGE

ITEM	PART NO.	DESCRIPTION	QTY	REV
	1001201704	Flare Storage	Ref	A
1	1001195523	Screw, 0.25” x 1.00”	8	
2	1001201695	Bracket	2	

Eastern Wrecker Sales Inc

FLARE STORAGE

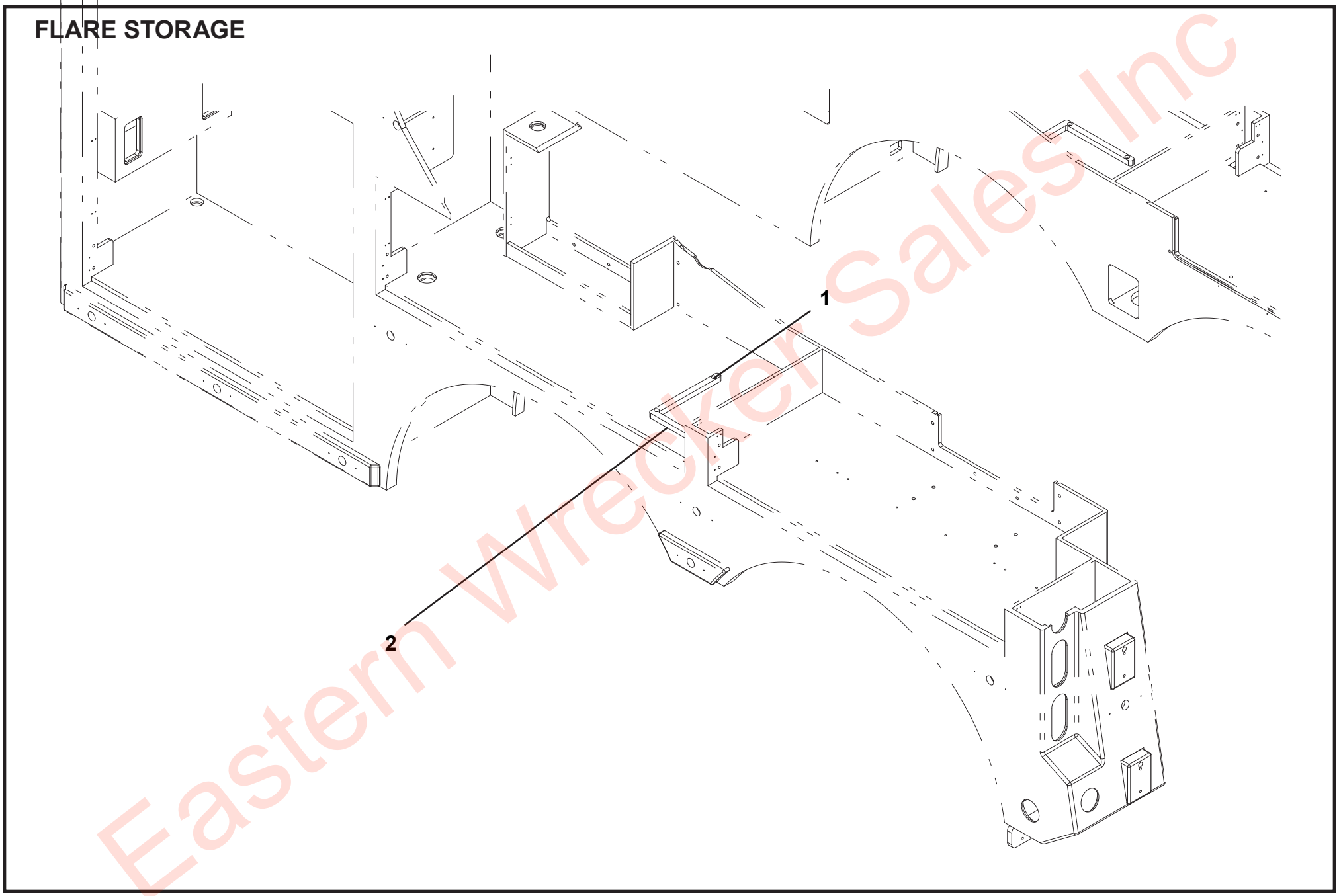

Eastern Wrecker Sales Inc

BOTTLE JACK STORAGE

ITEM	PART NO.	DESCRIPTION	QTY	REV
	1001196214	Bottle Jack Storage	Ref	B
1	1001170839	Bracket	1	
2	1001195257	Screw, 0.25” x 0.50”	2	
3	1001195523	Screw, 0.25” x 1.00”	4	
4	7950140143	Flatwasher, 0.25” ID	2	
5	1001167268	Strap	2	

Eastern Wrecker Sales Inc

BOTTLE JACK STORAGE

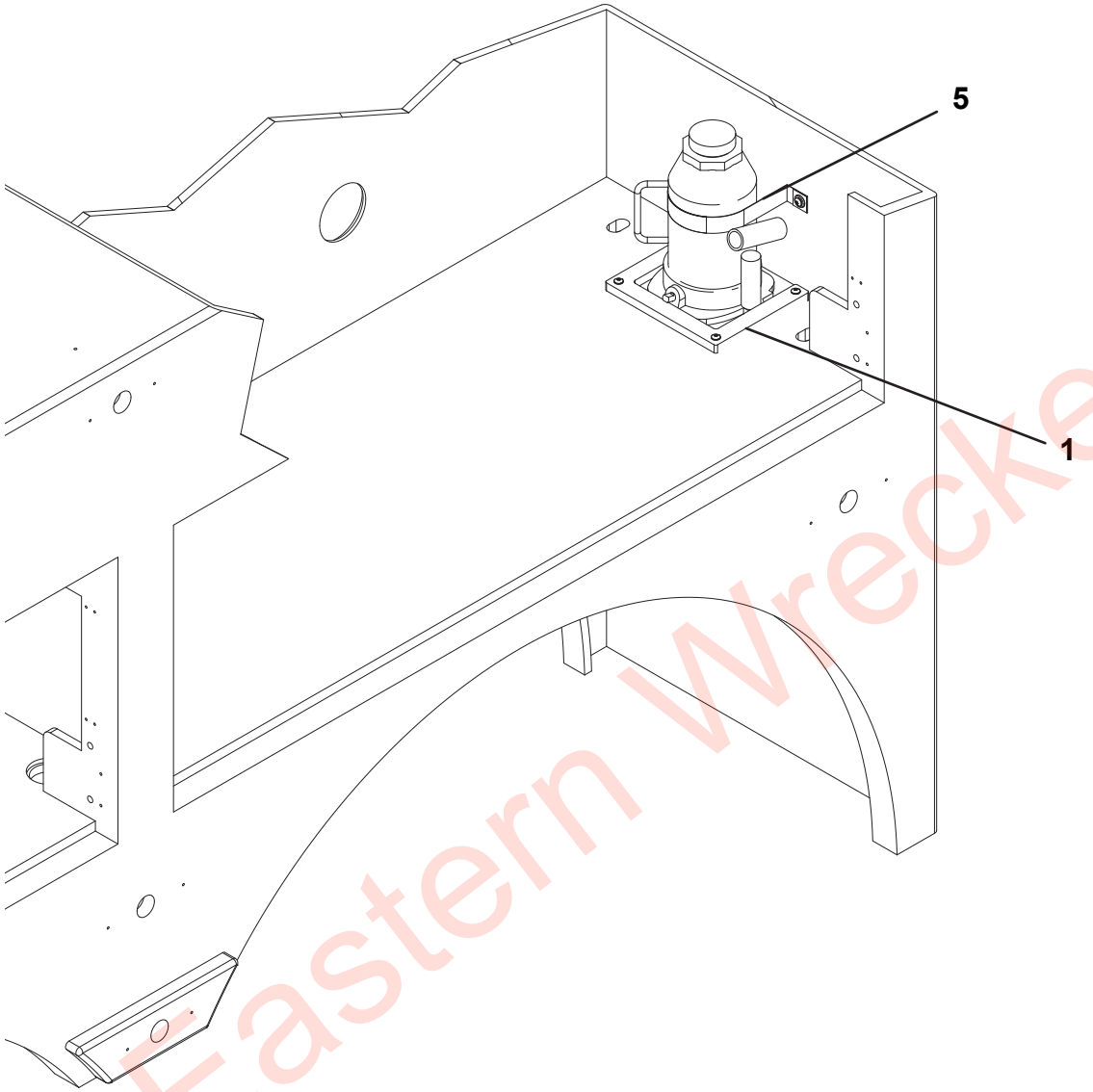

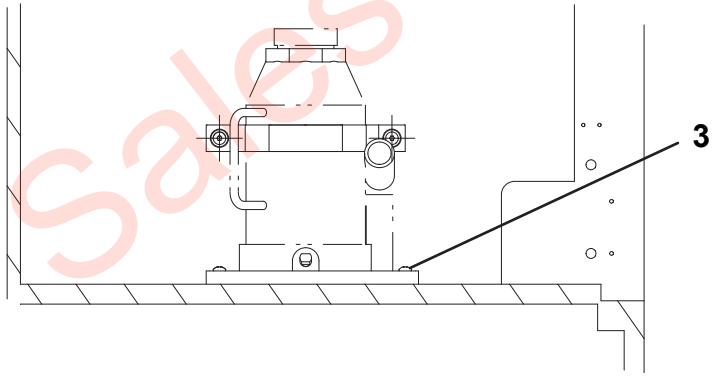

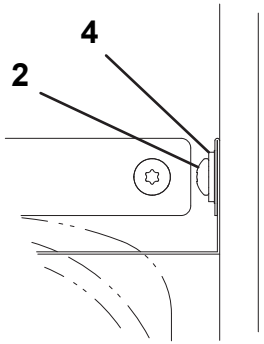

Eastern Wrecker Sales Inc

FIFTH WHEEL STORAGE INSTALLATION

ITEM	PART NO.	DESCRIPTION	QTY	REV
	1001195942	Fifth Wheel Storage Installation	Ref	C
1	1001168545	Screw, 0.38” x 1.25”	6	
2	1001190568	Bracket	1	
3	7950160143	Flatwasher, 0.38” ID	6	
4	1001191810	Bracket	1	

Eastern Wrecker Sales Inc

FIFTH WHEEL STORAGE INSTALLATION

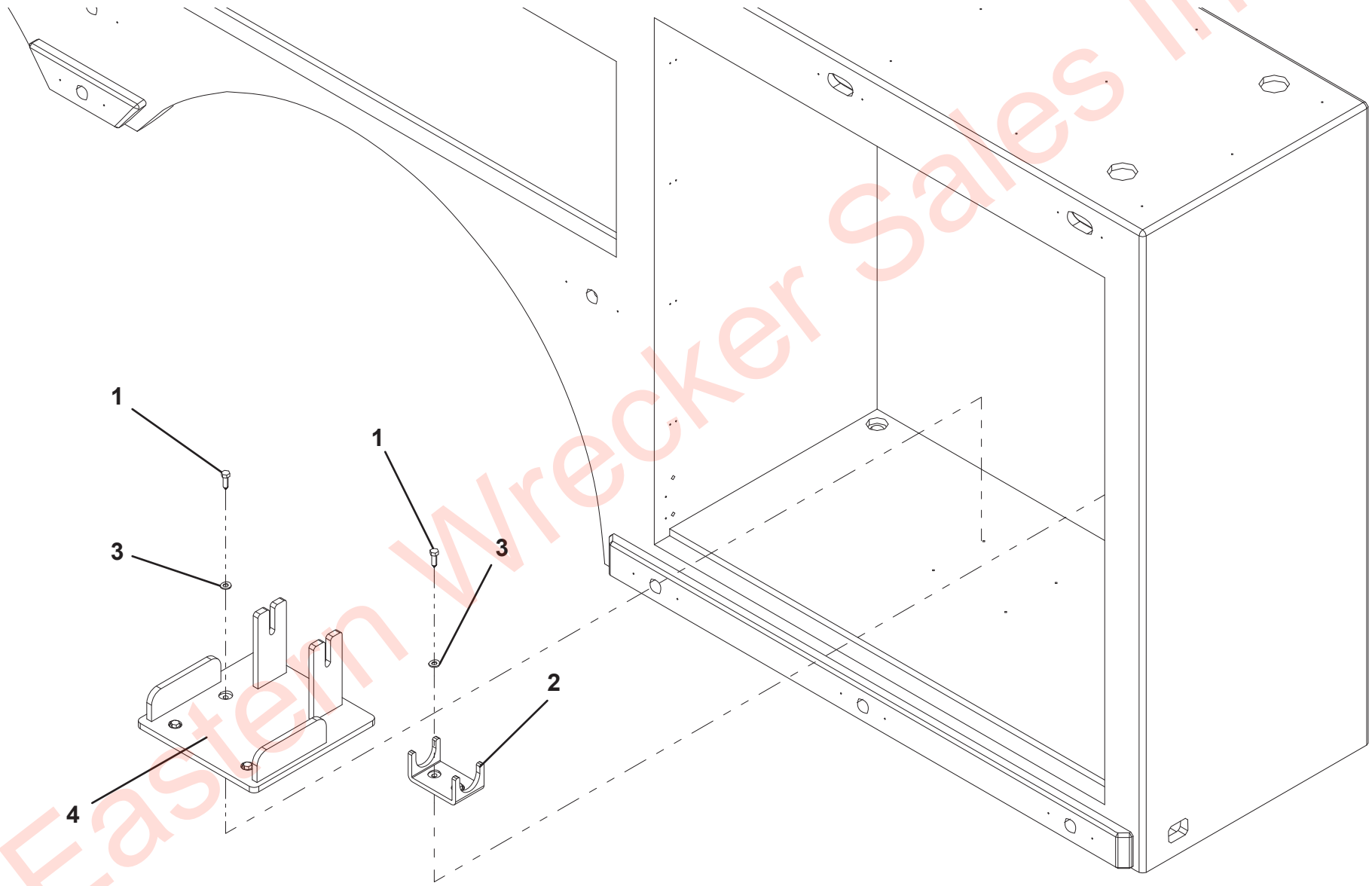

Eastern Wrecker Sales Inc

FRAME FORK STORAGE INSTALLATION

ITEM	PART NO.	DESCRIPTION	QTY	REV
	1001195839	Frame Fork Storage Installation	Ref	C
1	1001160799	Bracket	1	
2	1001166974	Washer, 0.38" ID Rubber	10	
3	1001168544	Screw, 0.38"-16 X 1.75"	6	
4	1001169083	Screw, 0.38"-16 X 2.00"	4	
5	1001190926	Bracket	1	
6	1001190988	Bracket	1	
7	1001195257	Screw, 0.25" X 0.50"	2	
8	1001195523	Screw, 0.25" X 1.00"	4	
9	1001195838	Bracket	1	
10	7660162601	Locknut, 0.38"-16NC	10	
11	7950160143	Flatwasher, 0.38" ID	20	

Eastern Wrecker Sales Inc

FRAME FORK STORAGE INSTALLATION

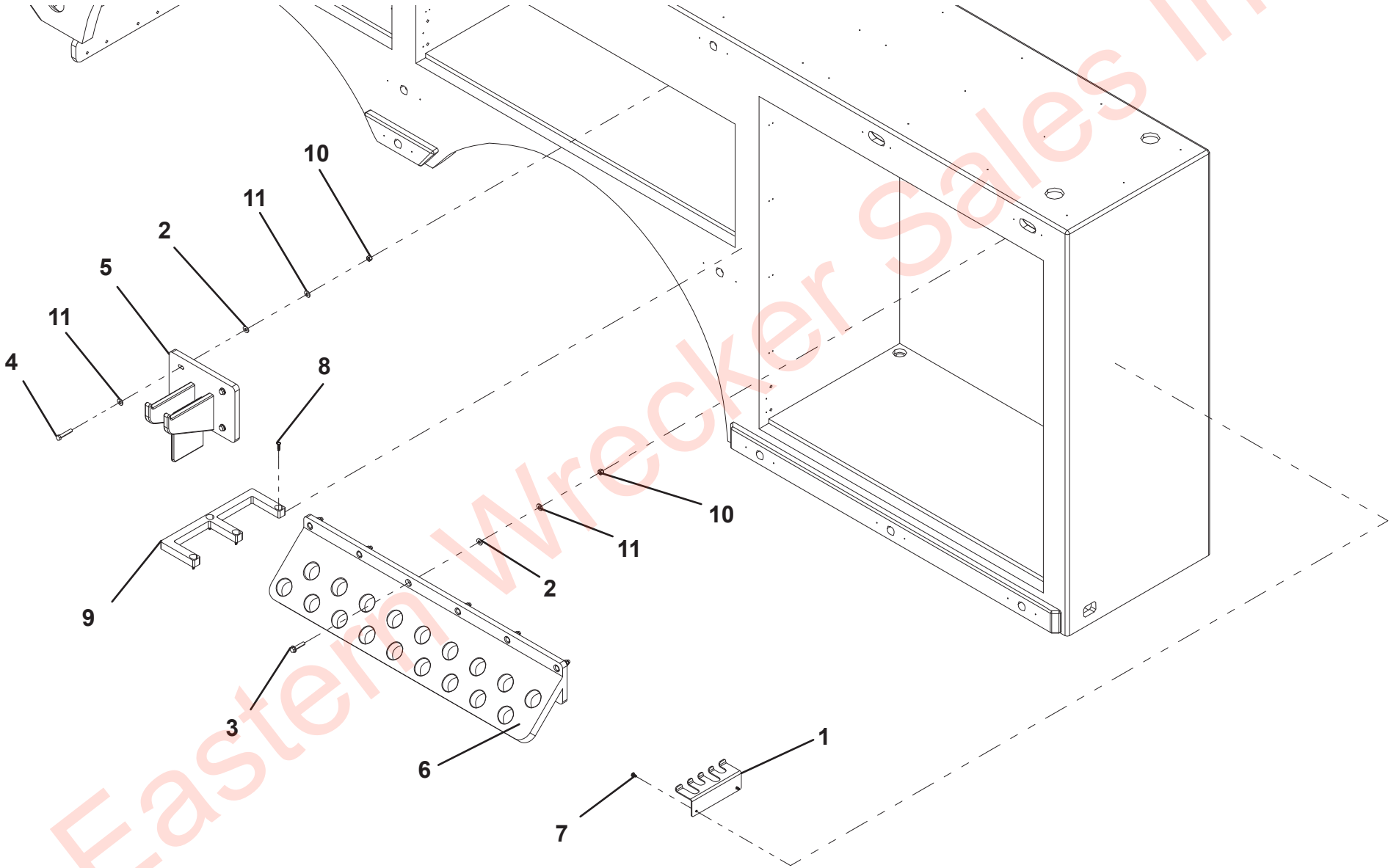

Eastern Wrecker Sales Inc

FORK RISER STORAGE INSTALLATION

ITEM	PART NO.	DESCRIPTION	QTY	REV
	1001195788	Fork Riser Storage Installation	Ref	B
1	1001169083	Screw, 0.38”-16 x 2.00”	4	
2	1001190926	Bracket	1	
3	7660162601	Locknut, 0.25”-20	4	
4	7950160143	Flatwasher, 0.38” ID	8	

Eastern Wrecker Sales Inc

FORK RISER STORAGE INSTALLATION

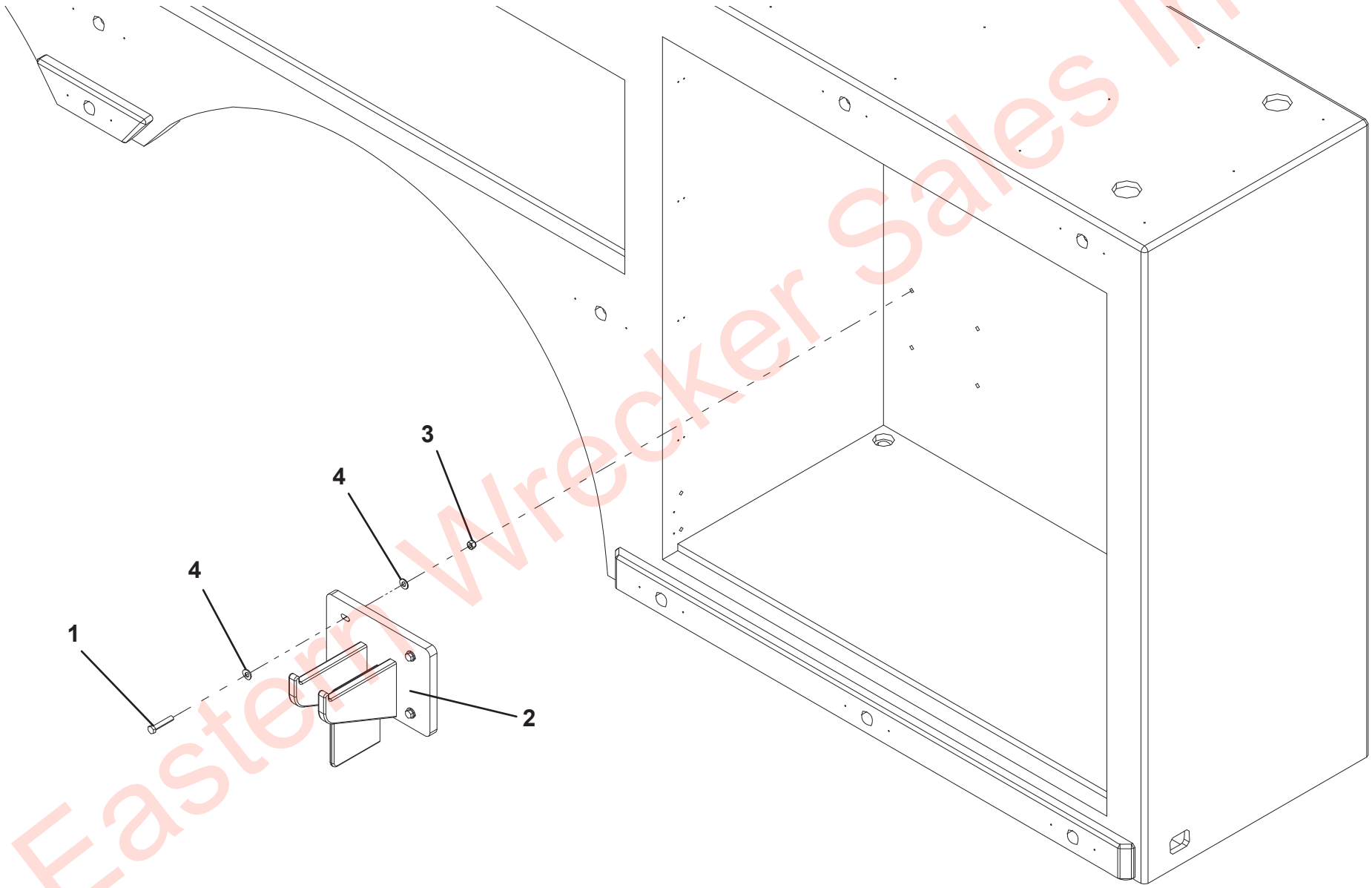

Eastern Wrecker Sales Inc

GRIZZLY BAR STORAGE

ITEM	PART NO.	DESCRIPTION	QTY	REV
	1001214175	Grizzly Bar Storage	Ref	A
1	1001175059	Clamp	5	
2	1001195523	Screw, 0.25” x 1.00”	4	
3	1001201916	Bracket	1	
4	1001209657	Screw, #12 x 0.75”	10	

Eastern Wrecker Sales Inc

GRIZZLY BAR STORAGE

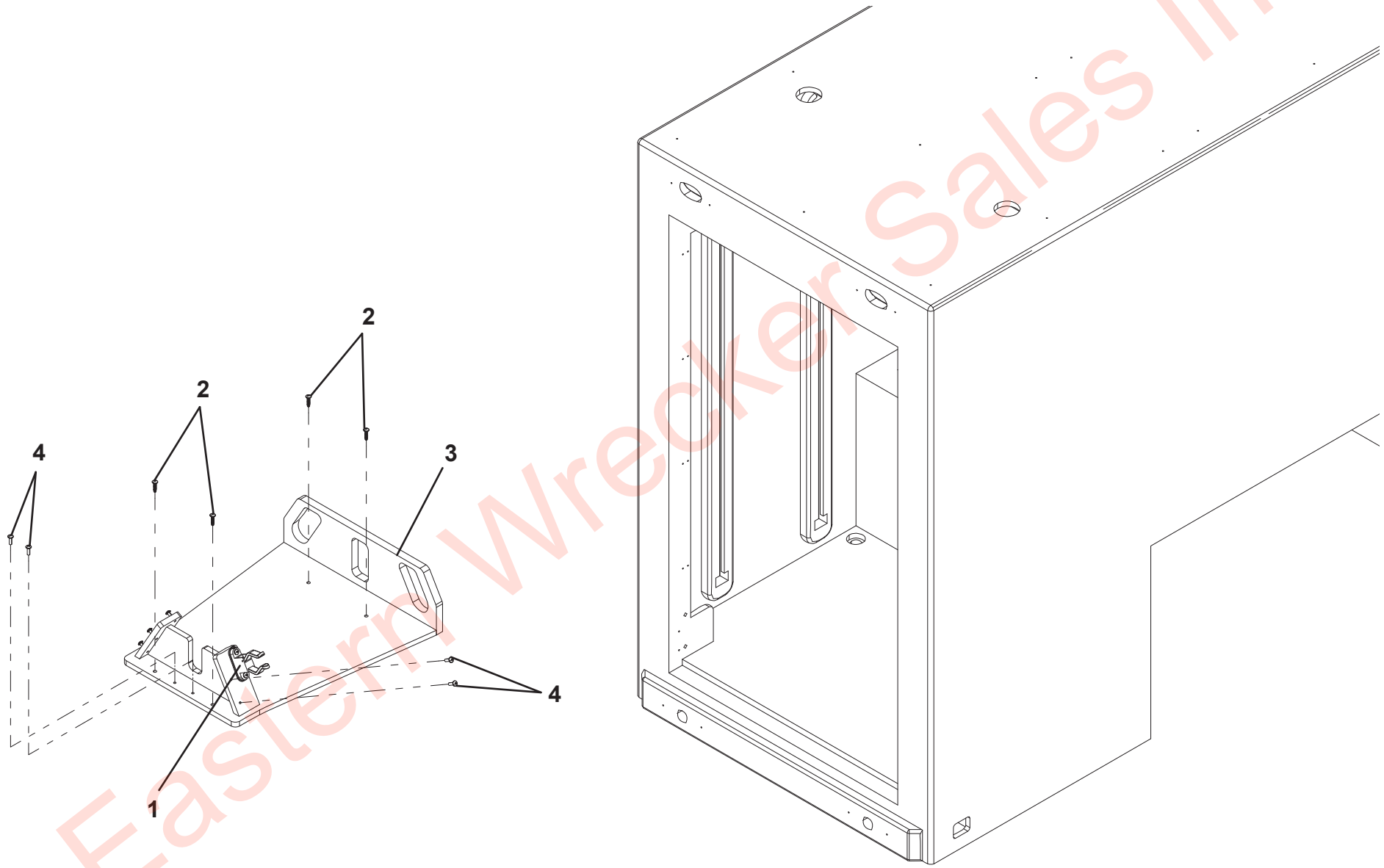

Eastern Wrecker Sales Inc

AIR BAG STORAGE SHELF 48” TUNNEL TOOLBOX

ITEM	PART NO.	DESCRIPTION	QTY	REV
	1001214264	Air Bag Storage Shelf 48” Tunnel Toolbox	Ref	A
1	1001169080	Screw, 0.38”-16 x 1.25”	8	
2	1001190364	Panel	2	
3	1001190579	Mount	8	
4	7950160143	Flatwasher, 0.38” ID	8	
5	1001166644	Nut, 0.38”-16	8	

Eastern Wrecker Sales Inc

AIR BAG STORAGE SHELF 48” TUNNEL TOOLBOX

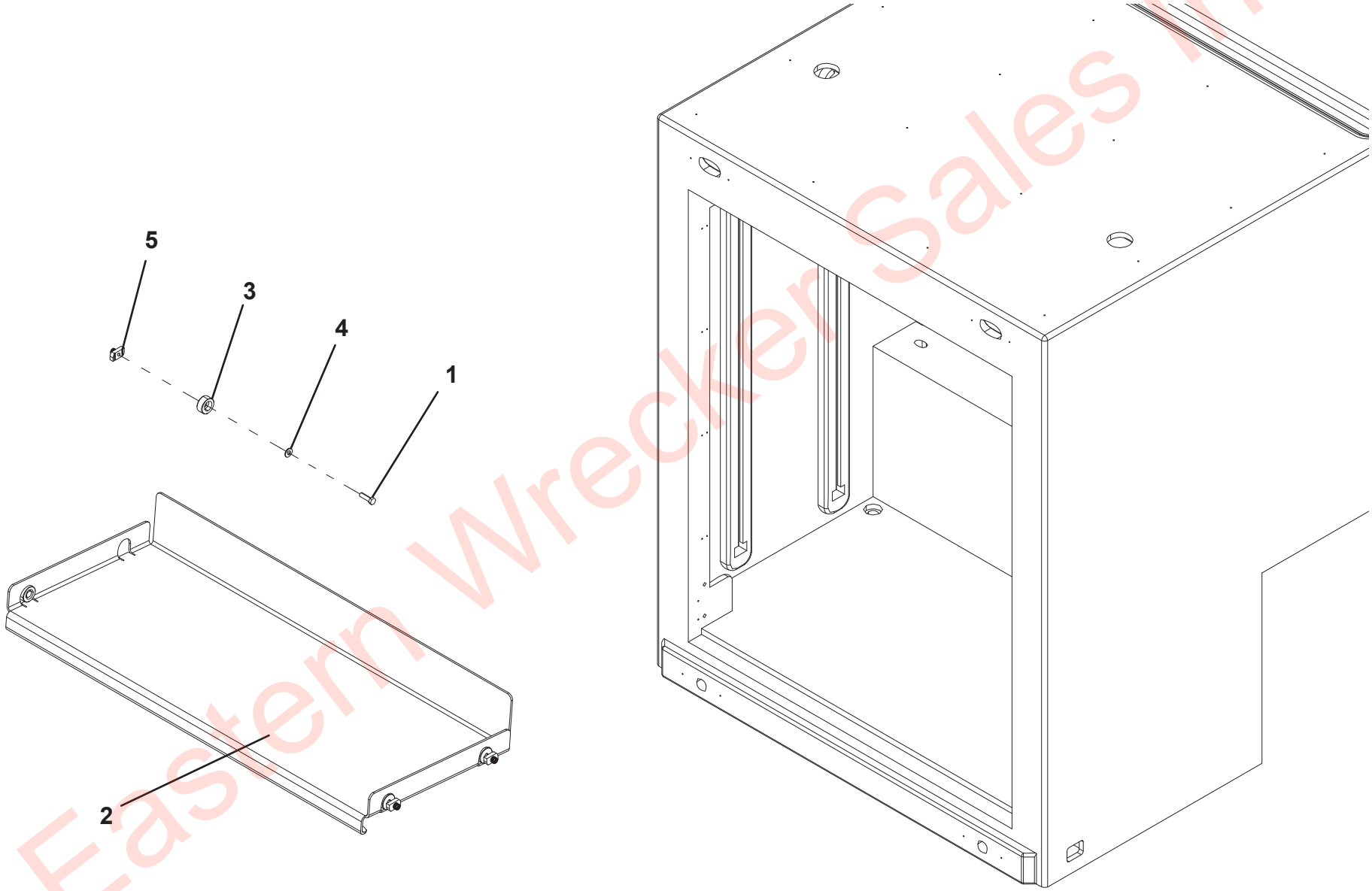

Eastern Wrecker Sales Inc

AIR BAG STORAGE SHELF 36” TUNNEL TOOLBOX

ITEM	PART NO.	DESCRIPTION	QTY	REV
	1001214298	Air Bag Storage Shelf 36” Tunnel Toolbox	Ref	A
1	1001169080	Screw, 0.38”-16 x 1.25”	8	
2	1001190579	Panel	8	
3	1001190954	Mount	2	
4	7950160143	Flatwasher, 0.38” ID	8	
5	1001166644	Nut, 0.38”-16	8	

Eastern Wrecker Sales Inc

AIR BAG STORAGE SHELF 36” TUNNEL TOOLBOX

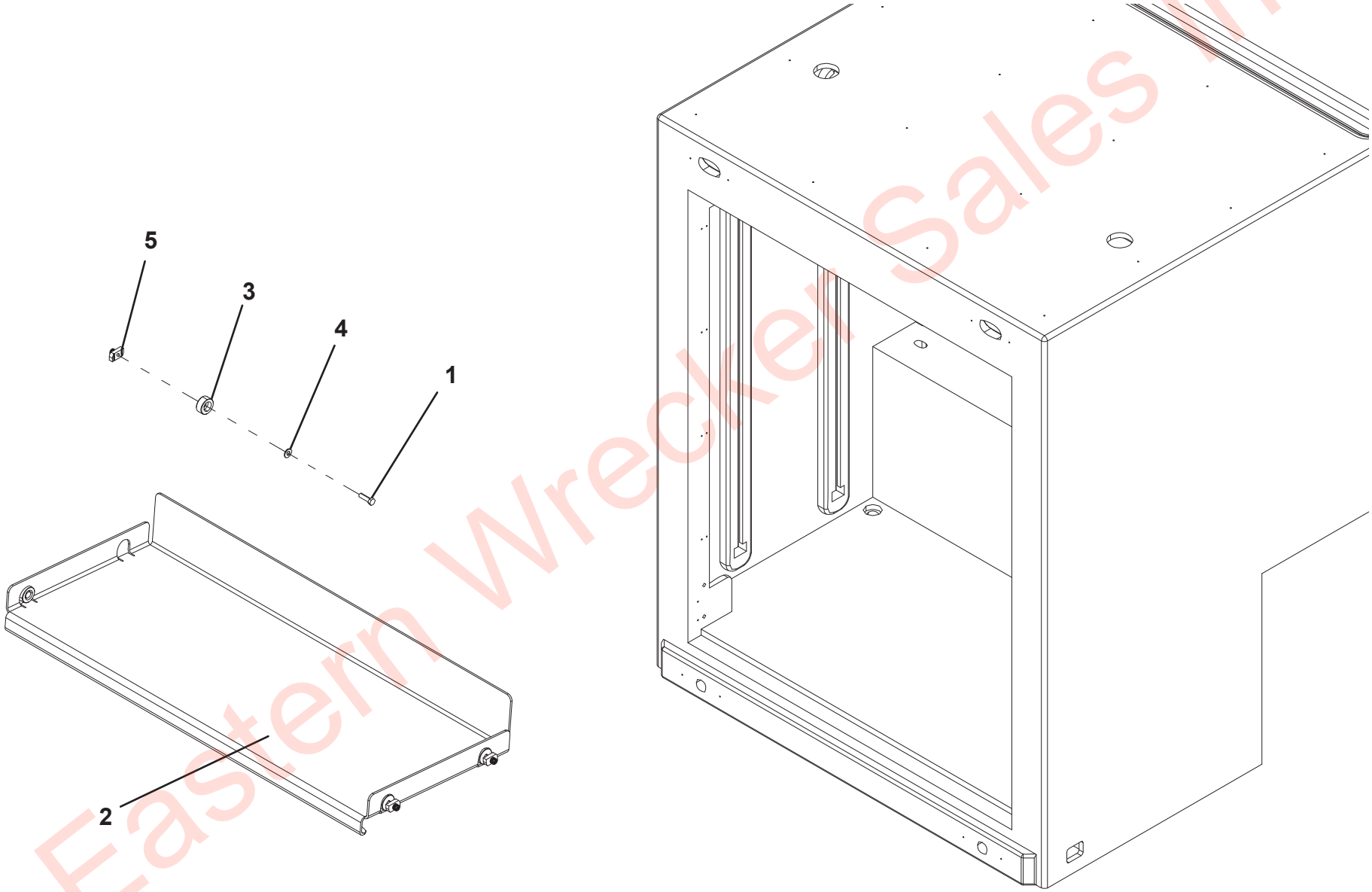

Eastern Wrecker Sales Inc

TOW SUPPORT by JERR-DAN

Phone (800) 926-9666

5376000181- A

Eastern Wrecker Sales Inc