THIS PAGE INTENTIONALLY LEFT BLANK

Eastern Wrecker Sales Inc

CONTROL VALVE ASSEMBLY - 1001202433

ITEM	PART NO.	DESCRIPTION	QTY	REV
	1001202433	Control Valve Assembly	Ref	B
1	0641524	Capscrew, 5/16” - 18 x 3”	3	
2	2220374	Adapter	14	
3	2220376	Adapter	1	
4	2220451	Adapter	2	
5	2220473	Adapter	1	
6	2220700	Adapter	1	
7	2220947	Adapter	4	
8	2230024	Adapter	1	
9	2230025	Adapter	14	
10	2230027	Fitting	2	
11	2230089	Fitting	3	
12	4751500	Washer, 5/16” ID	3	
13	8760037	Union	4	
14	1001184772	Handle, Long	2	
15	1001184773	Handle, Short	7	
16	1001200355	Panel	1	
17	1001194069	Linkage	9	
18	3177000060	Mount	1	
19	7443000211	Fitting	2	
20	7660162601	Locknut, 0.38” - 16NC	3	
21	1001203506	Valve, 9 Sec. 7 Sol (See Separate Breakdown in this Section)	1	
22	7912000301*	Tube Assembly	1	
23	7912000302*	Tube Assembly	1	
24	7912000303*	Tube Assembly	1	
25	7912000304*	Tube Assembly	1	
26	7912000305*	Tube Assembly	1	
27	7912000306*	Tube Assembly	2	
28	7912000307*	Tube Assembly	2	
29	7912000308*	Tube Assembly	7	
30	7912000309*	Tube Assembly	7	
31	7912000310*	Tube Assembly	1	

* Also Available In Tube Kit - 7577000669

Eastern Wrecker Sales Inc

CONTROL VALVE ASSEMBLY - 1001202433

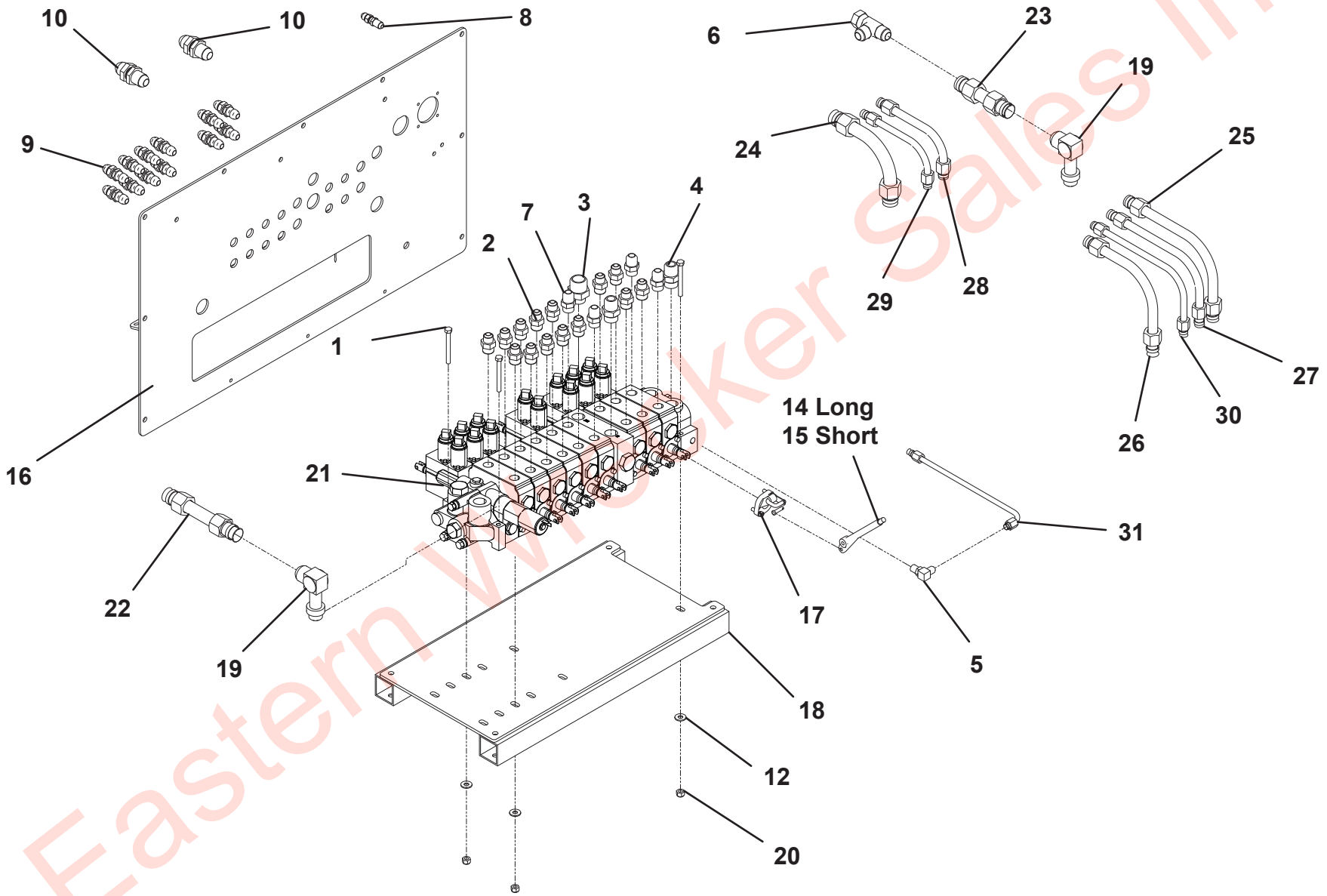

Eastern Wrecker Sales Inc

VALVE ASSEMBLY - 1001203506

ITEM	PART NO.	DESCRIPTION	QTY	REV
	1001203506	Valve Assembly	Ref	A
1	7935000315	Inlet Cover	1	
2	9935930120	Valve Section	2	
3	9935930119	Valve Section	5	
4	7935000316	Inlet	1	
5	7935000320	Valve Section	2	
6	7935000323	Utility Section	1	
7	7935000317	Outlet Cover	1	
8	91084009	Relief	2	
9	70050243	Plug	4	
10	7006847	Plug	14	
11	70050245	Plug	1	
12	70050246	Plug	2	
13	70050247	Plug	1	
14	91084017	Plug	3	
15	70050249	Plug	1	
16	70050241	Pressure Cartridge	1	
17	70050242	Solenoid	1	
18	70050250	Seal	15	
19	70050251	O-Ring	44	
20	70050252	O-Ring	6	
21	70051081	Seal Kit	2	
22	7029865	Seal Kit	18	
23	70051080	Seal Kit	1	
24	70050256	Seal Kit	1	
25	9346930086	Solenoid	8	
26	70051079	Seal	1	
27	70050239	Stud Assembly	1	
28	70050257	Wiper	18	

Eastern Wrecker Sales Inc

VALVE ASSEMBLY - 1001203506

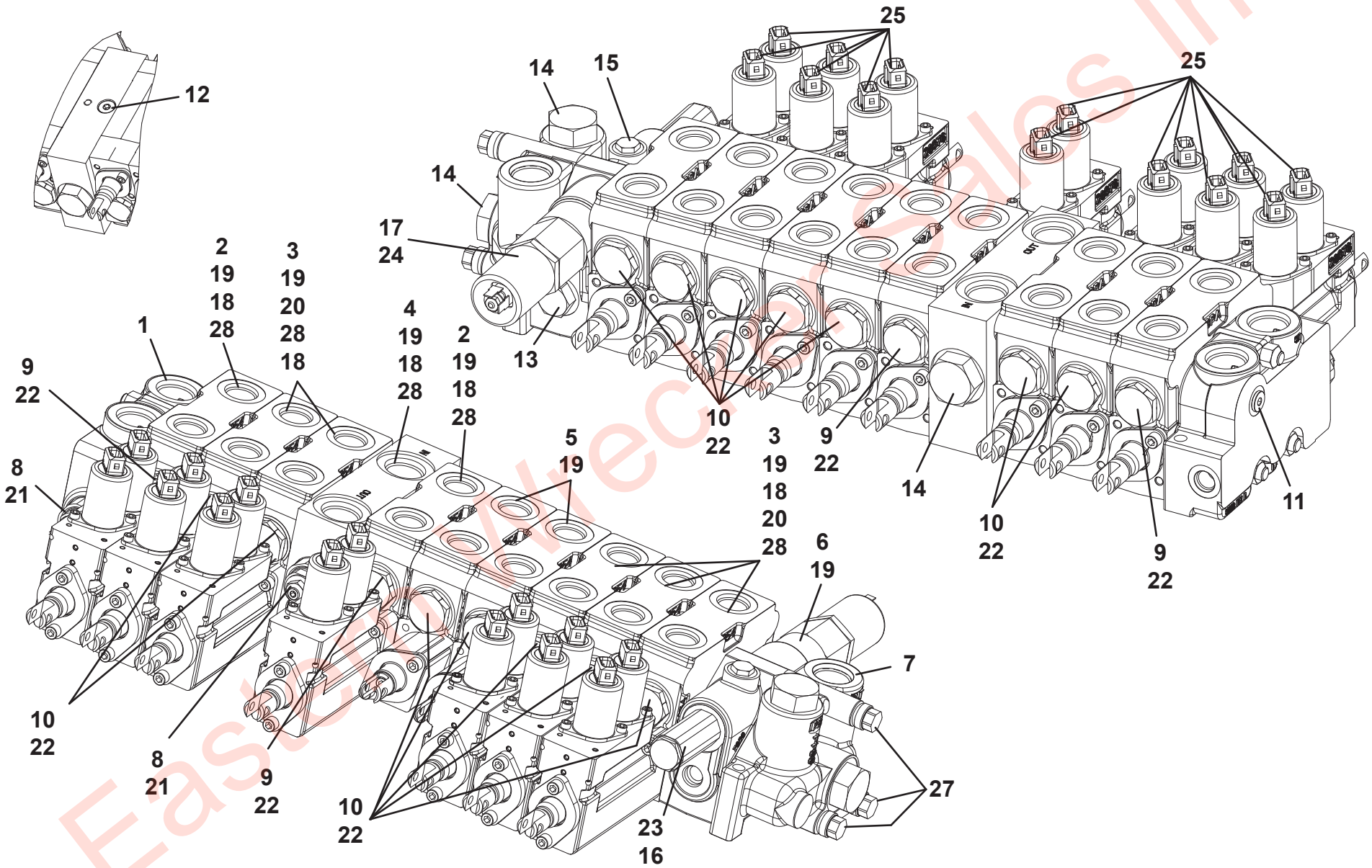

EastCoastWreckerSales Inc

CONTROL INSTALLATION - 10 SECTION - 8 SOLENOID

ITEM	PART NO.	DESCRIPTION	QTY	REV
	1001235580	Control Installation - 10 Section - 8 Solenoid	Ref	A
1	641632	Capscrew, 0.38”-16 X 4.00”	4	
2	3520064	Plug	2	
3	1001130491	Control Knob	20	
4	1001134433	Decal	1	
5	1001154277	Decal	1	
6	1001166974	Washer, 0.38”	21	
7	1001166978	Washer, 0.25”	3	
8	1001168993	Capscrew, 0.38”-16 X 1.50”	18	
9	1001169080	Capscrew, 0.38”-16 X 1.25”	3	
10	1001184827	Handle, Long	2	
11	1001184828	Handle, Short	7	
12	1001189784	Panel, Controls Top RH	1	
13	1001203229	Panel, Controls 10 Sect RH	1	
14	1001189993	Panel, Cable Bracket Cover	1	
15	1001202434	Valve Sub Assembly (See Separate Breakdown in this Section)	1	
16	1001194676	Screw, 0.25” X 0.75”	19	
17	1001194736	Spacer	1	
18	1001202517	Decal	1	
19	1001202518	Decal	1	
20	1001196909	Decal	1	
21	1001196910	Decal	1	
22	1001196911	Decal	2	
23	1001199311	Panel, Controls Front LH	1	
24	1001199322	Panel, Controls Rear RH	1	
25	1001199324	Panel, Controls Front RH	1	
26	1001214902	Panel, Controls Top LH	1	
27	1001219744	Panel, Controls 10 Sect LH	1	
28	1001219691	Panel, Controls Rear LH	1	
29	1001219937	Plate	1	
30	1001220068	Bracket	1	
31	4309000001	Coupling	3	
32	4309000007	Coupling	6	
33	7082000005	Bearing	2	
34	7114140618	Screw, 0.25”-20 X 0.75”	22	
35	7114141018	Screw, 0.25"-20 X 1.25"	10	
36	7413000002	Nutsert, 0.25”-20	22	
37	7660140230	Nut, 0.25"-28	18	
38	7660142601	Locknut, 0.25" -20NC	10	
39	7660162601	Locknut, 0.38"-16NC	29	
40	7690141200	Pin	18	
41	7691000075	Pin	18	
42	7754000009	Retaining Ring	2	
43	7806000008	Shaft	1	
44	7950140003	Lockwasher, 0.25" ID	22	
45	7950140143	Flatwasher, 0.25” ID	61	
46	7950160143	Flatwasher, 0.38" ID	58	
47	7990000003	Yoke	9	
48	1001202741	Cable Push Pull	5	
49	7796000012	Seal	8.7 FT	
50	1001169083	Capscrew, 0.38”-16 X 2.00”	4	
51	1001206801	Cable Push Pull	5	

Eastern Wrecker Sales Inc

CONTROL INSTALLATION - 10 SECTION - 8 SOLENOID

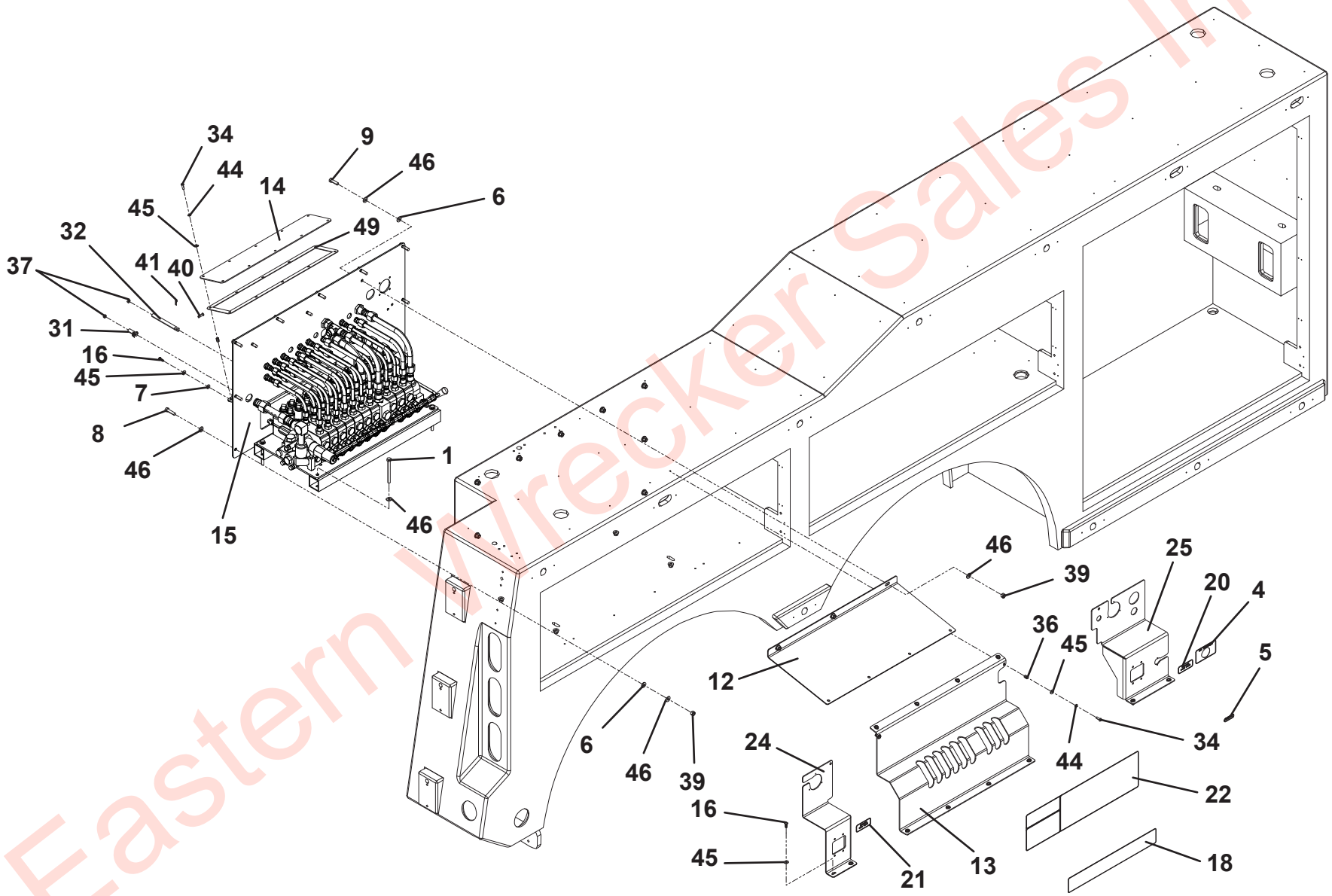

Eastern Wrecker Sales Inc

CONTROL INSTALLATION - 10 SECTION - 8 SOLENOID

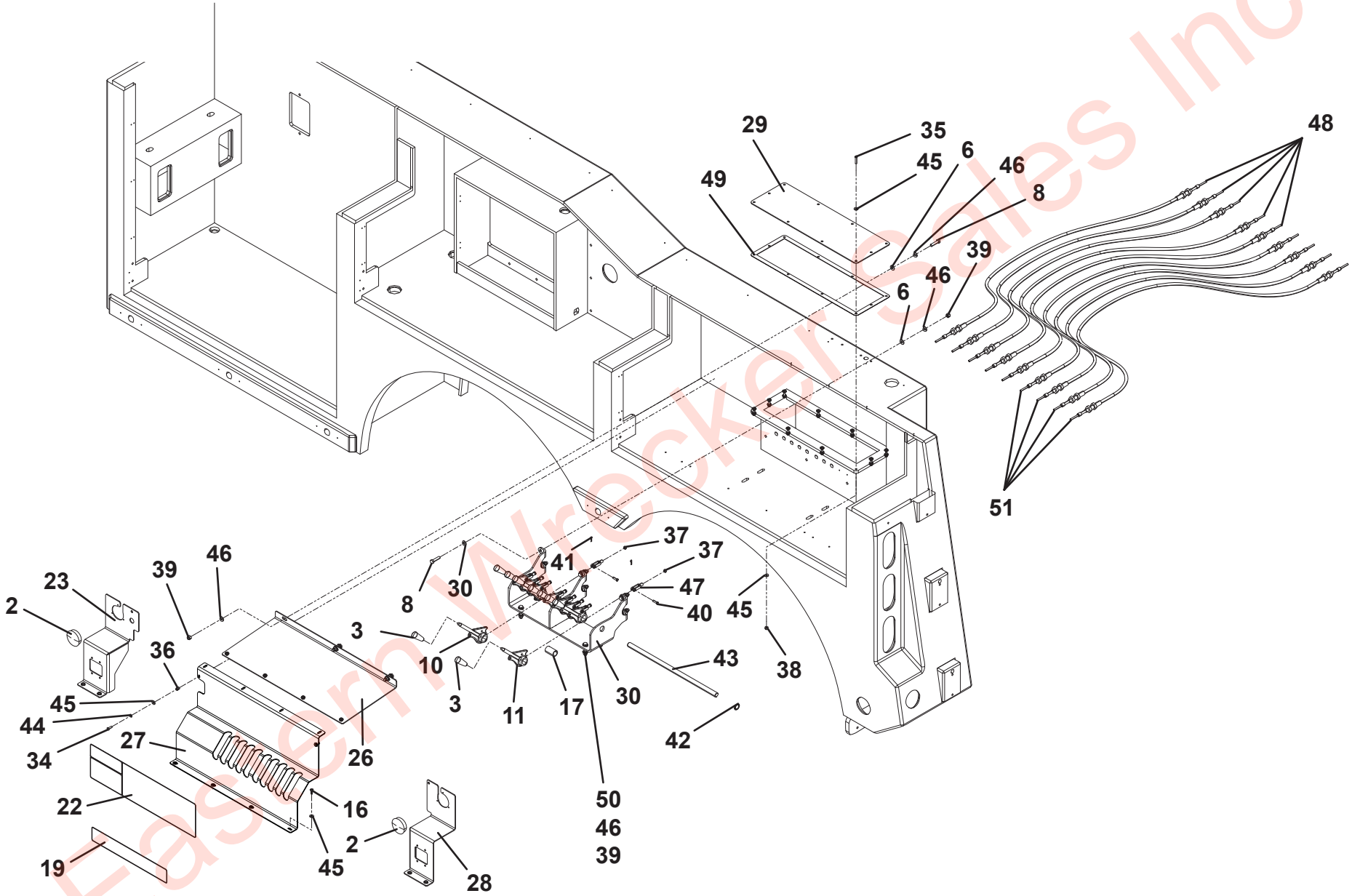

Eastern Wrecker Sales Inc

THIS PAGE INTENTIONALLY LEFT BLANK

Eastern Wrecker Sales Inc

CONTROL VALVE ASSEMBLY - 1001202434

ITEM	PART NO.	DESCRIPTION	QTY	REV
	1001202434	Control Valve Assembly	Ref	B
1	0641524	Capscrew, 5/16” - 18 x 3”	3	
2	2220374	Adapter	14	
3	2220376	Adapter	1	
4	2220451	Adapter	2	
5	2220473	Adapter	1	
6	2220700	Adapter	1	
7	2220947	Adapter	4	
8	2230024	Adapter	1	
9	2230025	Adapter	14	
10	2230027	Fitting	2	
11	2230089	Fitting	3	
12	4751500	Washer, 5/16” ID	3	
13	8760037	Union	4	
14	1001184772	Handle, Long	2	
15	1001184773	Handle, Short	7	
16	1001200355	Panel	1	
17	1001194069	Linkage	9	
18	3177000060	Mount	1	
19	7443000211	Fitting	2	
20	7660162601	Locknut, 0.38” - 16NC	3	
21	7935000374	Valve, 9 Sec. 7 Sol (See Separate Breakdown in this Section)	1	
22	7912000301*	Tube Assembly	1	
23	7912000302*	Tube Assembly	1	
24	7912000303*	Tube Assembly	1	
25	7912000304*	Tube Assembly	1	
26	7912000305*	Tube Assembly	1	
27	7912000306*	Tube Assembly	2	
28	7912000307*	Tube Assembly	2	
29	7912000308*	Tube Assembly	7	
30	7912000309*	Tube Assembly	7	
31	7912000310*	Tube Assembly	1	

* Also Available In Tube Kit - 7577000669

Eastern Wrecker Sales Inc

CONTROL VALVE ASSEMBLY - 1001202434

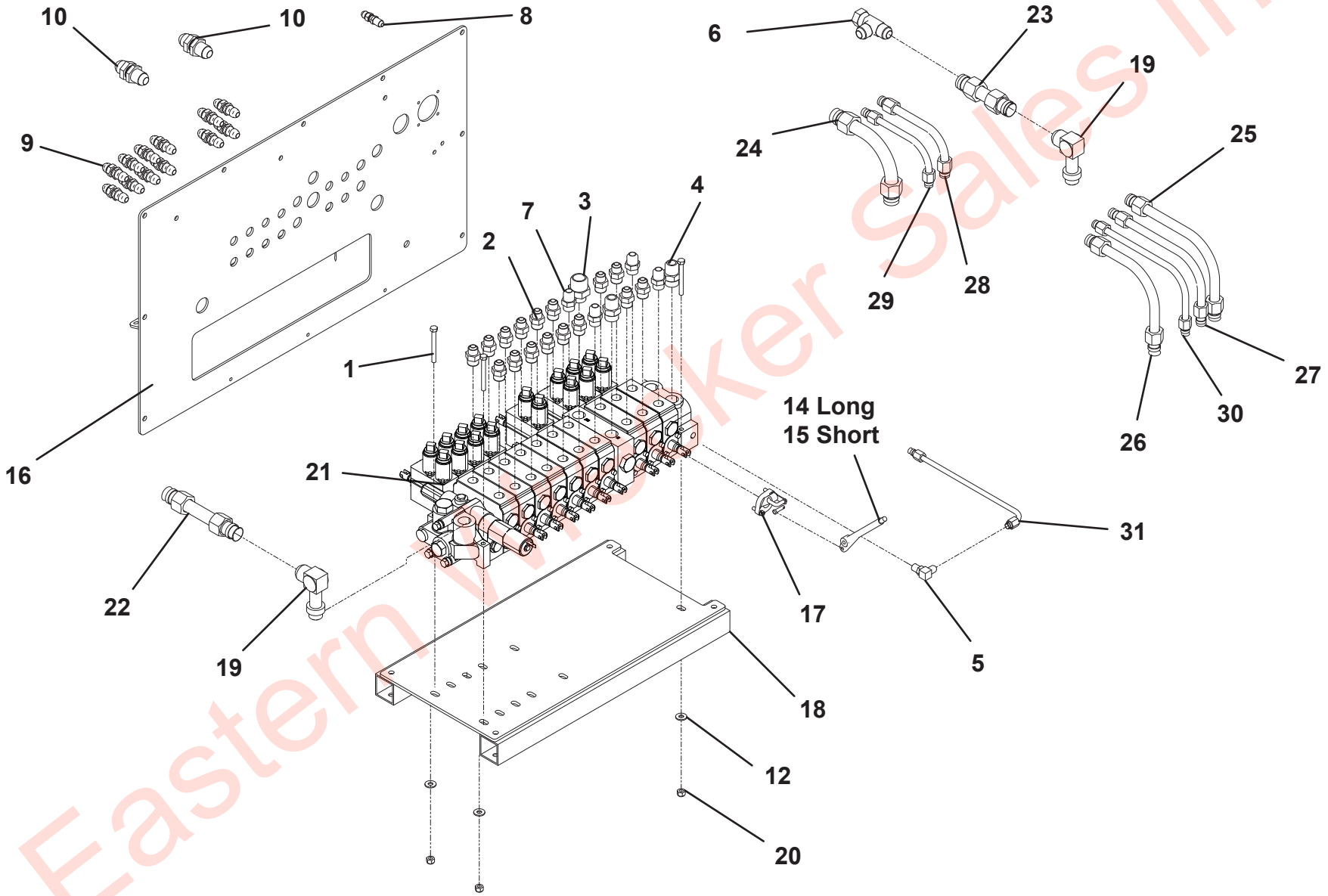

Eastern Wrecker Sales Inc

VALVE ASSEMBLY - 7935000374

ITEM	PART NO.	DESCRIPTION	QTY	REV
	7935000374	Valve Assembly	Ref	B
1	7935000315	Inlet Cover	1	
2	9935930120	Valve Section	2	
3	9935930119	Valve Section	4	
4	7935000316	Inlet	1	
5	7935000320	Valve Section	2	
6	7935000323	Utility Section	1	
7	7935000317	Outlet Cover	1	
8	91084009	Relief	2	
9	70050243	Plug	6	
10	7006847	Plug	12	
11	70050245	Plug	1	
12	70050246	Plug	2	
13	70050247	Plug	1	
14	91084017	Plug	3	
15	70050249	Plug	1	
16	70050241	Pressure Cartridge	1	
17	70050242	Solenoid	1	
18	70050250	Seal	18	
19	70050251	O-Ring	40	
20	70050252	O-Ring	6	
21	70051081	Seal Kit	2	
22	7029865	Seal Kit	20	
23	70051080	Seal Kit	1	
24	70050256	Seal Kit	1	
25	9346930086	Solenoid	16	
26	70051079	Seal	1	
27	70050239	Stud Assembly	1	
28	70050257	Wiper	18	

Eastern Wrecker Sales Inc

VALVE ASSEMBLY - 7935000374

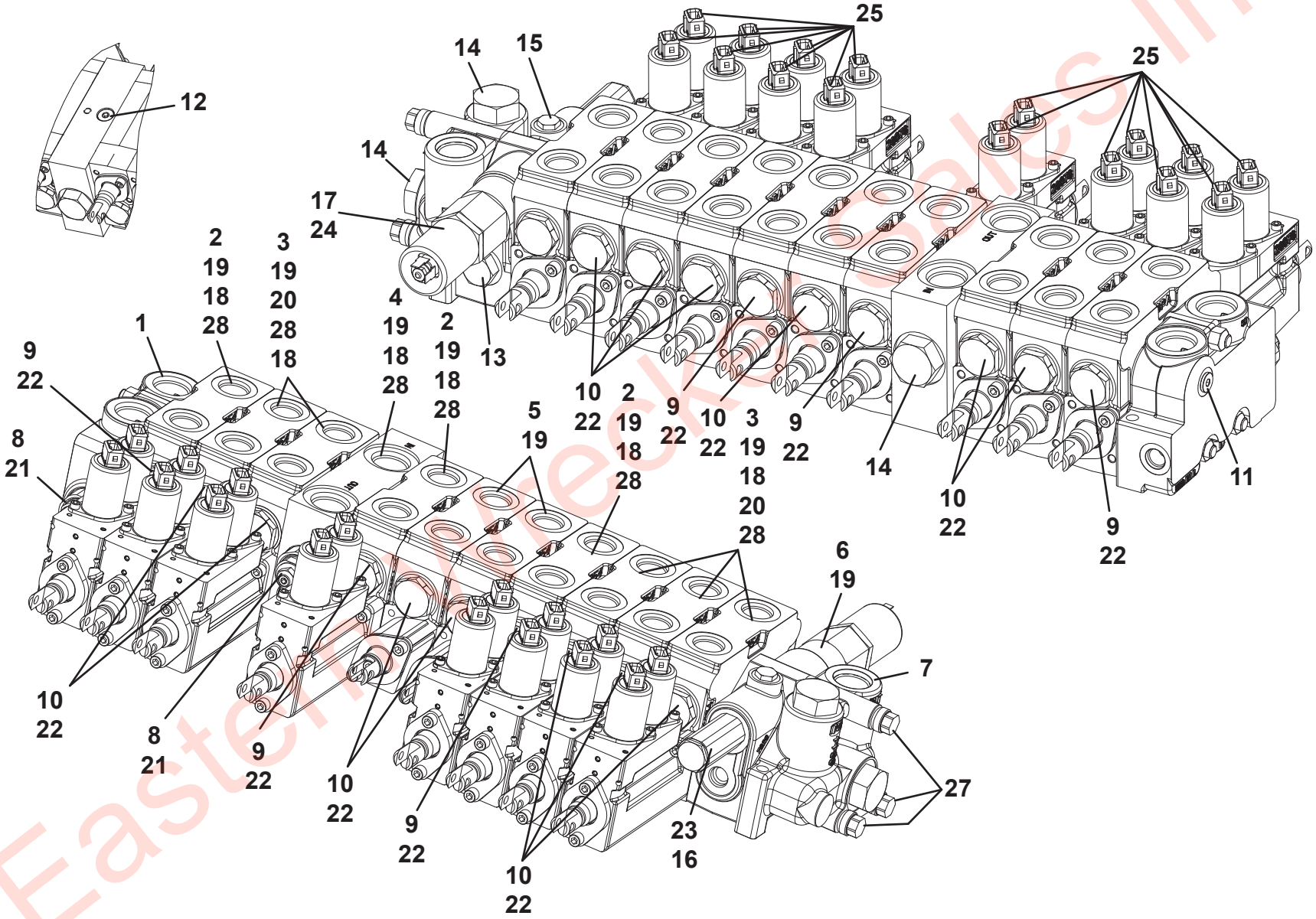

Eastern Wrecker Sales Inc

WIRELESS REMOTE 6 FUNCTION - 9 SECTION

ITEM	PART NO.	DESCRIPTION	QTY	REV
	1001212003	Wireless Remote 6 Function - 9 Section	Ref	B
1	1001209022	Harness	1	
2	1001192958	Screw, #10 x 0.50”	4	
3	1001196552	Screw, #8 x 0.75”	4	
4	7075000003	Battery, 9V	1	
5	5526000553	Tie Strap	2	
6	7295000146	Wireless Remote	1	
	9295310027	Transmitter	1	
	9295310029	Rubber Boot	1	
	9295310030	Belt Clip	1	
	9295310031	Battery Retainer	1	
	9295310068	Receiver	1	
	9295310069	Antenna	1	
7	1001198602	Screw, #8 x 0.38”	3	

Eastern Wrecker Sales Inc

WIRELESS REMOTE 6 FUNCTION - 9 SECTION

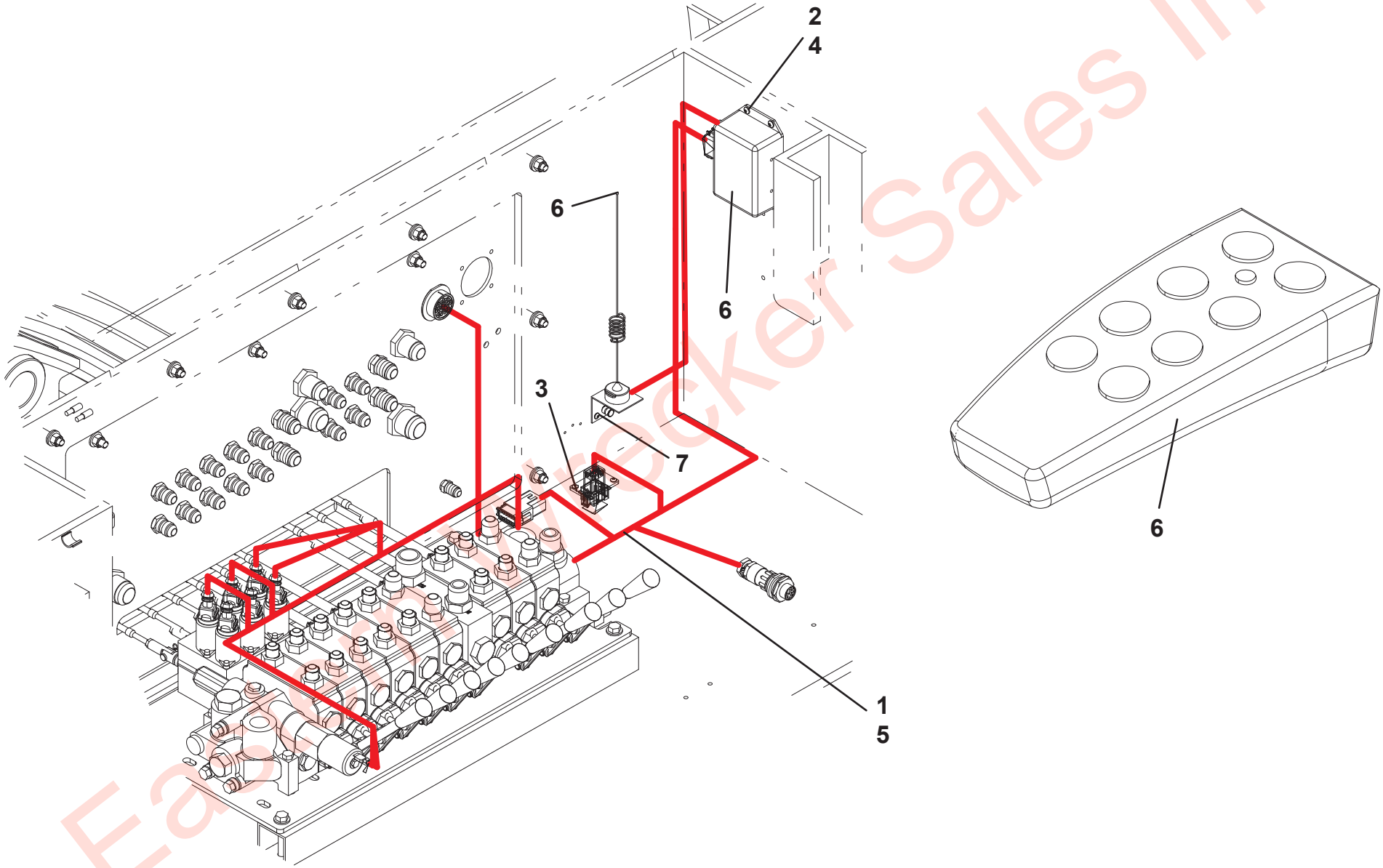

Eastern Wrecker Sales Inc

WIRELESS REMOTE 14 FUNCTION NON-PROPORTIONAL

ITEM	PART NO.	DESCRIPTION	QTY	REV
	1001212004	Wireless Remote 14 Function Non-Proportional	Ref	B
1	1001209020	Harness	1	
2	1001195523	Screw, 0.25” x 1.00”	2	
3	1001196552	Screw, #8 x 0.75”	4	
4	7075000003	Battery, 9V	1	
5	7295000124	Wireless Remote	1	
	1001139463	Transmitter	1	
	1001139464	Receiver	1	

Eastern Wrecker Sales Inc

WIRELESS REMOTE 14 FUNCTION NON-PROPORTIONAL

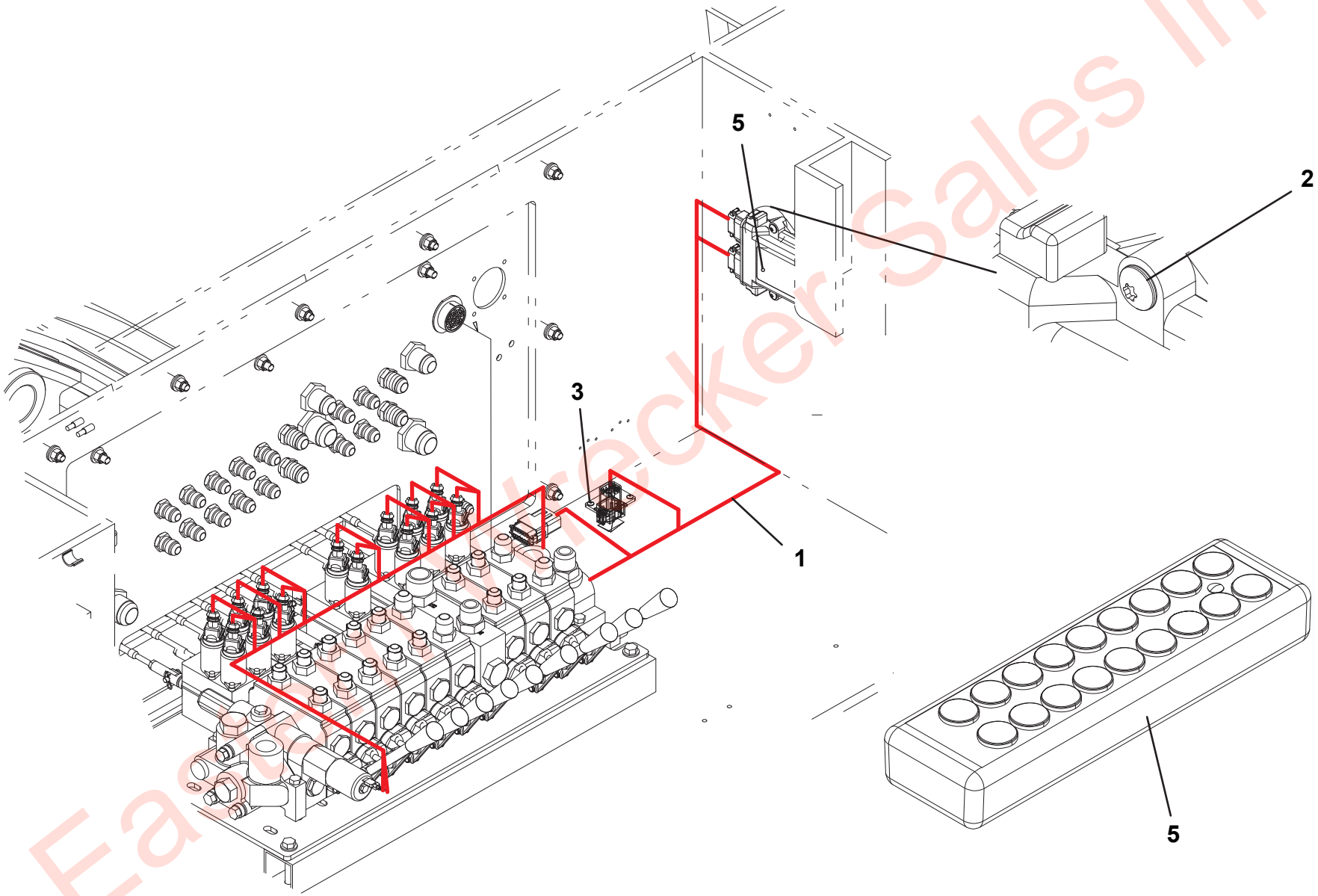

Eastern Wrecker Sales Inc

WIRELESS REMOTE 14 FUNCTION PROPORTIONAL

ITEM	PART NO.	DESCRIPTION	QTY	REV
	1001235707	Wireless Remote 14 Function Proportional	Ref	A
1	1001145240	Control, Wireless 10 Function	1	
	70050106	Receiver	1	
	70050107	Transmitter	1	
	9295310061	Antenna Kit	1	
	9552310033	Tether - 25 ft	1	
2	1001192958	Screw, #10 x 0.50”	4	
3	1001194676	Screw, 0.25” x 0.75”	4	
4	1001195523	Screw, 0.25” x 1.00”	2	
5	1001196552	Screw, #8 x 0.75”	4	
6	4178000699	Bracket	1	
7	7075000003	Battery, 9V	1	
8	7075000006	Battery, D 1.5V	3	
9	1001209021	Harness	1	
10	5526000553	Tie Straps	2	
11	7295000146	Wireless Remote	1	
	9295310027	Transmitter	1	
	9295310029	Rubber Boot	1	
	9295310030	Belt Clip	1	
	9295310031	Battery Retainer	1	
	9295310068	Receiver	1	
	9295310069	Antenna Kit	1	
12	8632000012	Trim Lock	1	
13	7120000047	Screw, #4 x 0.62”	2	
14	7660040000	Nut, #4	2	
15	1001198602	Screw, #8 x 0.38”	6	

Eastern Wrecker Sales Inc

WIRELESS REMOTE 14 FUNCTION PROPORTIONAL

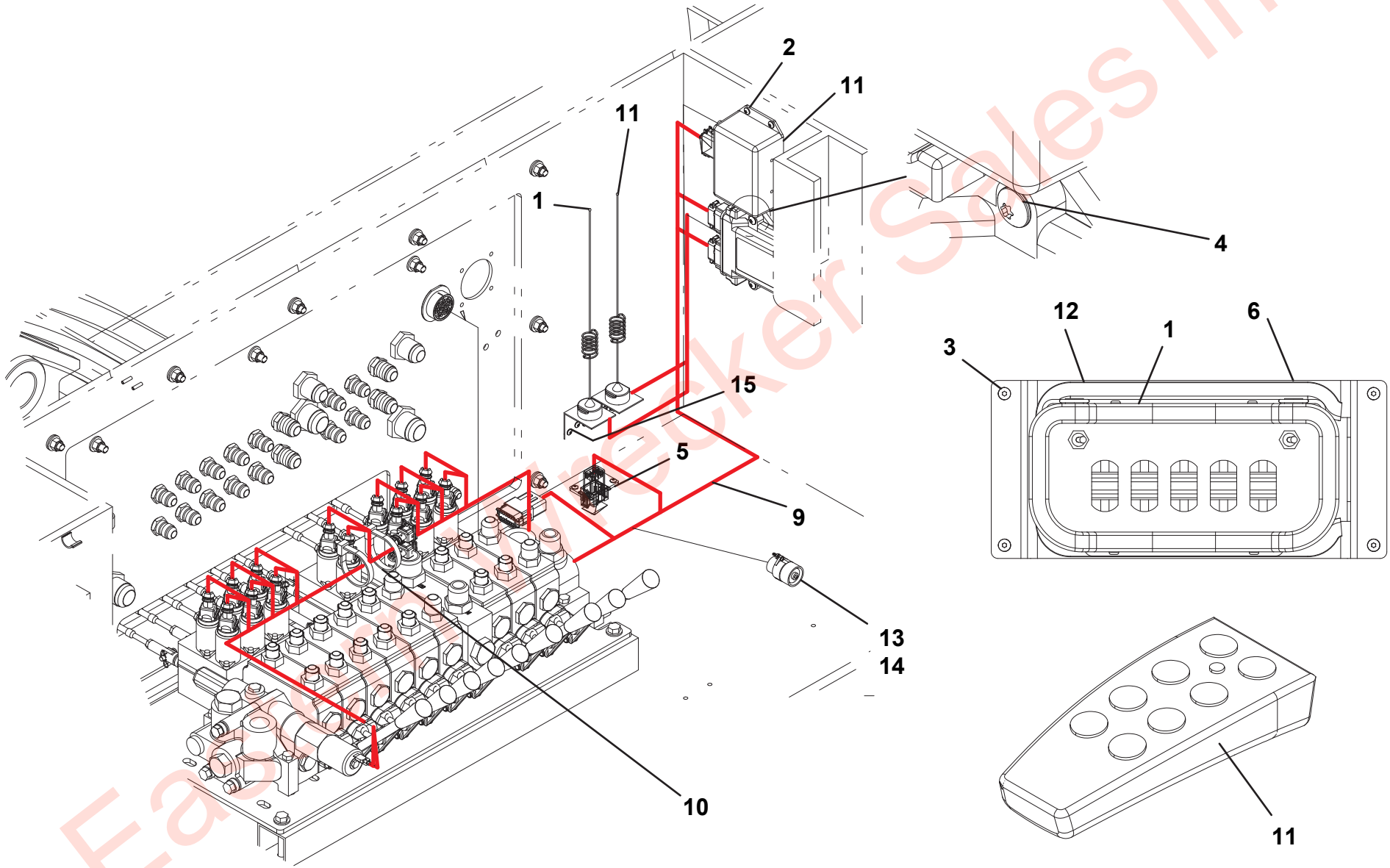

Eastern Wrecker Sales Inc

WIRELESS REMOTE 16 FUNCTION PROPORTIONAL

ITEM	PART NO.	DESCRIPTION	QTY	REV
	1001235708	Wireless Remote 16 Function Proportional	Ref	A
1	1001145240	Control, Wireless 10 Function	1	
	70050106	Receiver	1	
	70050107	Transmitter	1	
	9295310061	Antenna Kit	1	
	9552310033	Tether - 25 ft	1	
2	1001192958	Screw, #10 x 0.50”	4	
3	1001194676	Screw, 0.25” x 0.75”	4	
4	1001195523	Screw, 0.25” x 1.00”	2	
5	1001196552	Screw, #8 x 0.75”	4	
6	4178000699	Bracket	1	
7	7075000003	Battery, 9V	1	
8	7075000006	Battery, D 1.5V	3	
9	7120000047	Screw, #4 x 0.62”	2	
10	7660040000	Nut, #4	2	
11	1001209021	Harness	1	
12	7295000146	Wireless Remote	1	
	9295310027	Transmitter	1	
	9295310029	Rubber Boot	1	
	9295310030	Belt Clip	1	
	9295310031	Battery Retainer	1	
	9295310068	Receiver	1	
	9295310069	Antenna Kit	1	
13	8632000012	Trim Lock	1	
14	1001198602	Screw, #8 x 0.38”	6	

Eastern Wrecker Sales Inc

WIRELESS REMOTE 16 FUNCTION PROPORTIONAL

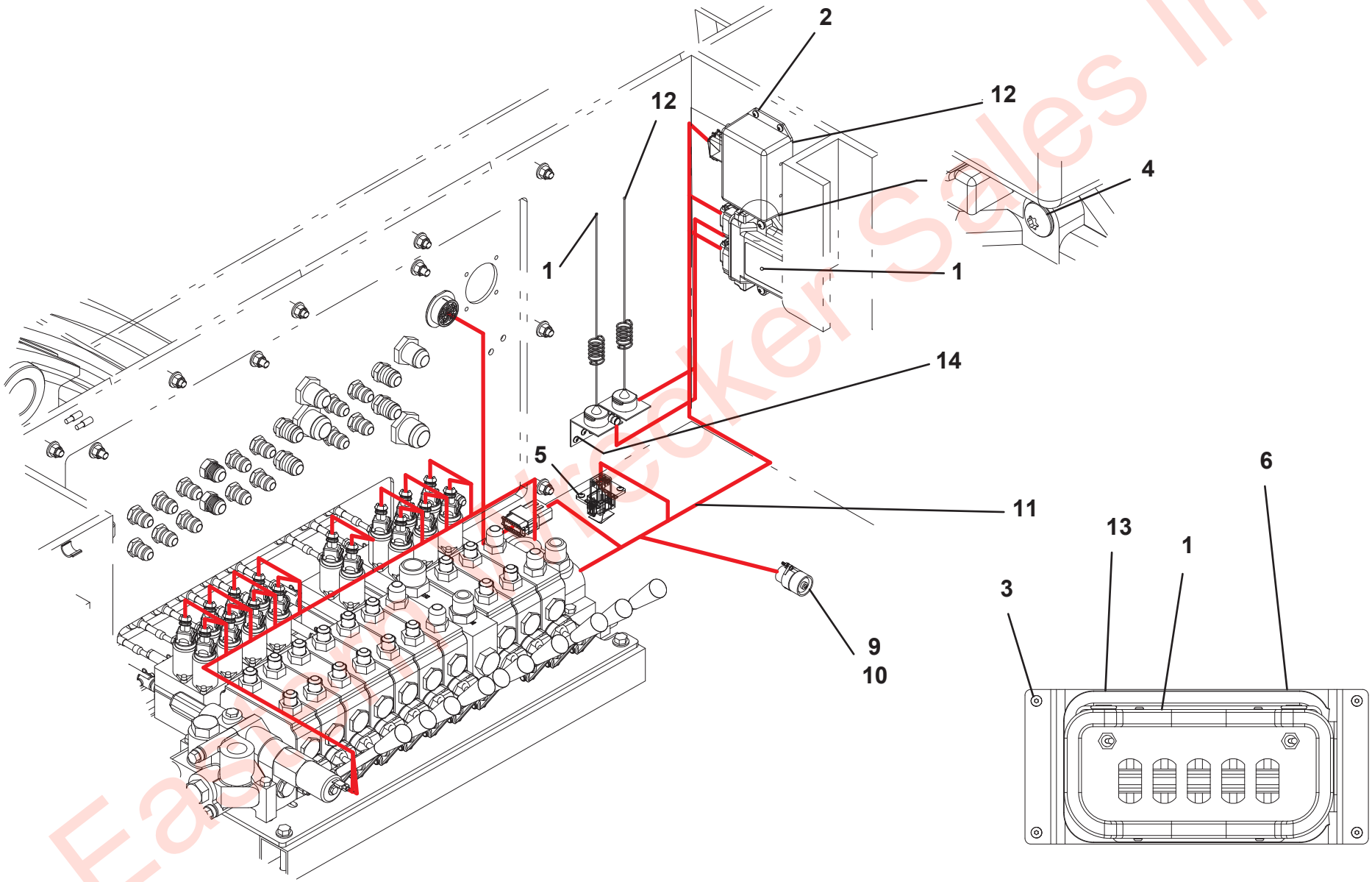

Eastern Wrecker Sales Inc

THIS PAGE INTENTIONALLY LEFT BLANK

Eastern Wrecker Sales Inc

SECTION 5 - CYLINDER

Eastern Wrecker Sales Inc

SPADE CYLINDER ASSEMBLY - 7320000006

ITEM	PART NO.	DESCRIPTION	QTY	REV
	7320000006	Spade Cylinder Assembly	Ref	B
1	9796250080	Seal, Wiper	1	
2	7019828	Seal	1	
3	9754250009	Ring, Back-up	1	
4	9796250057	Seal, “O” Ring	1	
5	9796250073	Seal	1	
6	9796250061	Seal, “O” Ring	1	
7	9796250066	Seal, “O” Ring	1	
8	9724250014	Ring, Wear	1	
9	9754250015	Ring, Wear	2	
10	7577000167	Kit, Seal	1	
11	7003212	Locknut	1	
12	7005322	Grease Fitting	2	
13	7005365	Plug, Port (Not Shown)	2	
14	70021648	Plug, Port (Not Shown)	2	
15	70050215	Valve, Counterbalance	2	
16	9912250004	Assembly, Tube	1	
17	9763250009	Assembly, Rod	1	
18	9553250009	Head	1	
19	70050531	Piston	1	

Eastern Wrecker Sales Inc

SPADE CYLINDER ASSEMBLY - 7320000006

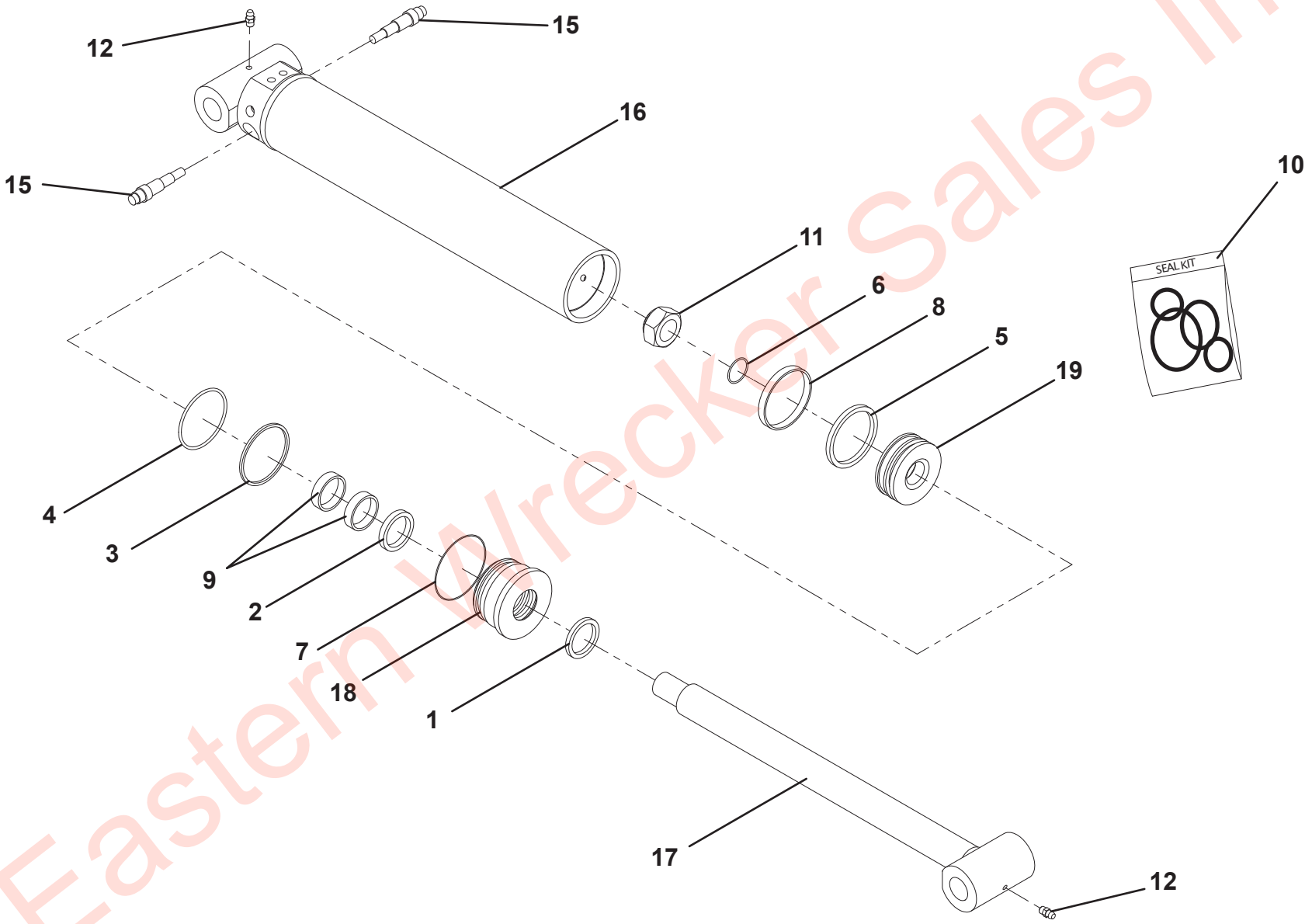

Eastern Wrecker Sales Inc

BOOM LIFT CYLINDER - 7320000027

ITEM	PART NO.	DESCRIPTION	QTY	REV
	7320000027	Boom Lift Cylinder	Ref	B
1	NSS	Wiper	1	
2	NSS	Seal	1	
3	NSS	Back-Up	1	
4	NSS	Seal	1	
5	NSS	O-Ring	1	
6	NSS	O-Ring	1	
7	NSS	Wear Ring	4	
8	NSS	Wear Ring	2	
9	7577250190	Seal Kit	1	
10	9786250005	SetScrew	1	
11	9661250018	Locknut	1	
12	7005365	Port Plug	4	
13	7023593	Port Plug	2	
14	7440030200	Lube Fitting	1	
15	9935250032	Counterbalance Valve	2	
16	9912250007	Tube Assembly	1	
17	9763250012	Rod Assembly	1	
18	9698250002	Piston	1	
19	9254250009	Headcap	1	
20	9553250004	Head	1	

Eastern Wrecker Sales Inc

BOOM LIFT CYLINDER - 7320000027

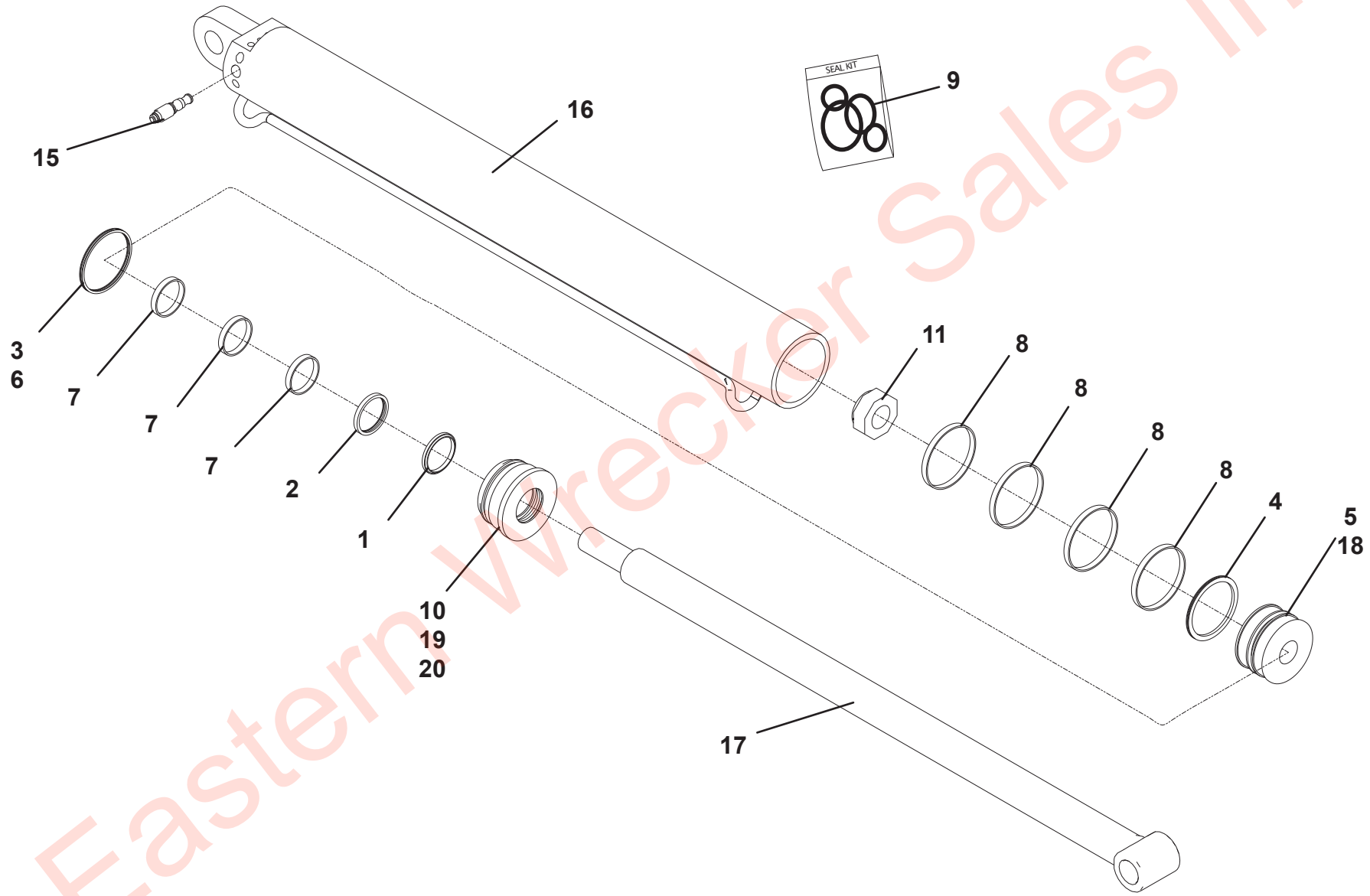

Eastern Wrecker Sales Inc

BOOM LIFT CYLINDER - 7320000062

ITEM	PART NO.	DESCRIPTION	QTY	REV
	7320000062	Boom Lift Cylinder	Ref	B
1	NSS	Wiper	1	
2	NSS	Seal	1	
3	NSS	Back-Up	1	
4	NSS	Seal	1	
5	NSS	O-Ring	1	
6	NSS	O-Ring	1	
7	NSS	Wear Ring	4	
8	NSS	Wear Ring	2	
9	7577250190	Seal Kit	1	
10	9786250005	Set Screw	1	
11	9661250018	Locknut	1	
12	9754250056	Wear Ring	2	
13	7005365	Port Plug	4	
14	7023593	Port Plug	2	
15	7440030200	Lube Fitting	1	
16	9935250032	Counterbalance	2	
17	9912250007	Tube Assembly	1	
18	9763250012	Rod Assembly	1	
19	9698250002	Piston	1	
20	9254250009	Headcap	1	
21	9553250004	Head	1	
22	70051333	Spacer	1	

Eastern Wrecker Sales Inc

BOOM LIFT CYLINDER - 7320000062

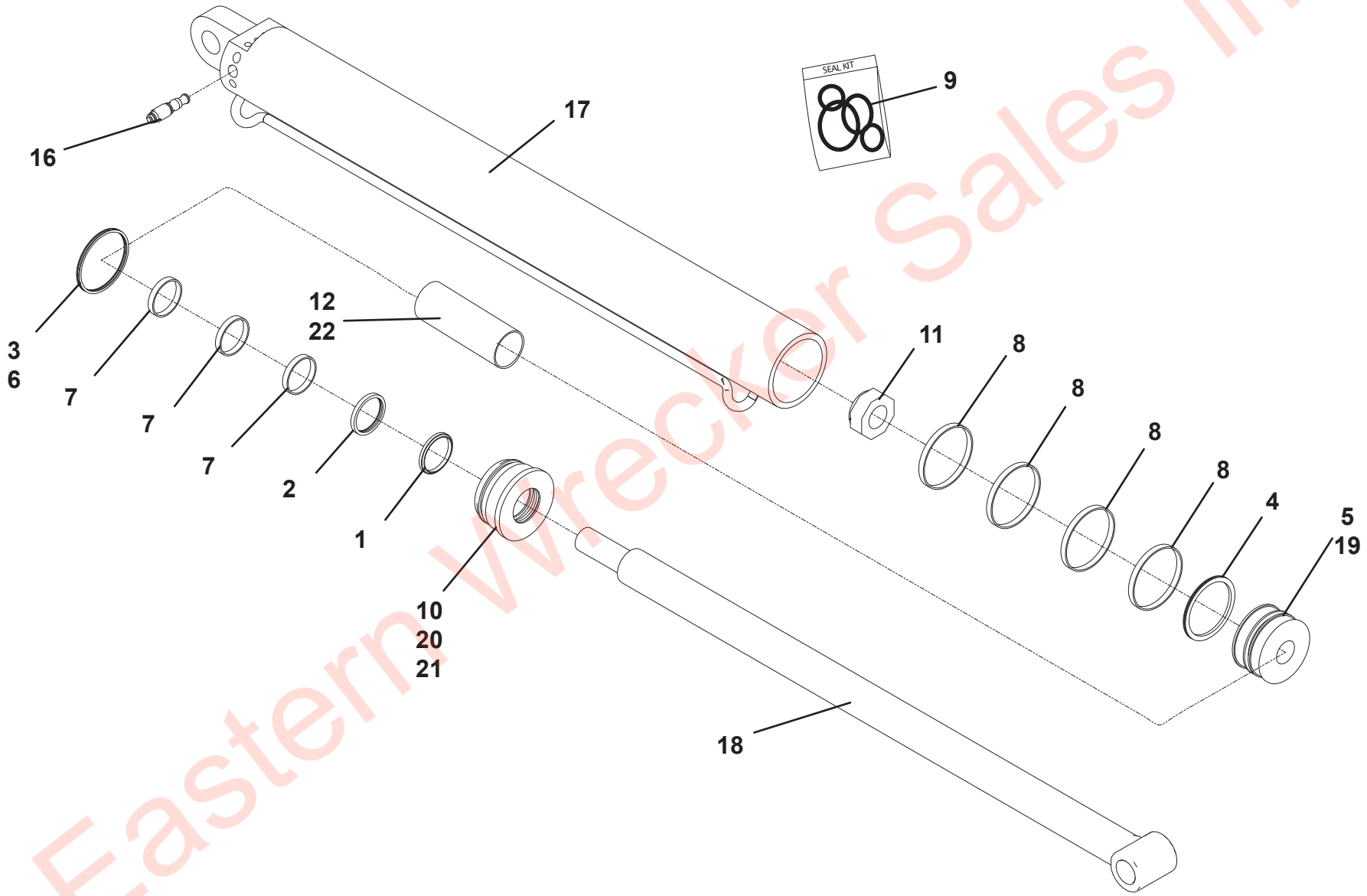

Eastern Wrecker Sales Inc

WRECKER BOOM CYLINDER - 7320000028

ITEM	PART NO.	DESCRIPTION	QTY	REV
	7320000028	Wrecker Boom Cylinder	Ref	B
1	NSS	Wiper	1	
2	NSS	Seal	1	
3	NSS	Back-Up	1	
4	NSS	O-Ring	1	
5	NSS	Seal	1	
6	NSS	O-Ring	1	
7	NSS	O-Ring (Not Shown)	1	
8	NSS	Wear Ring	2	
9	NSS	Wear Ring	2	
10	7577000167	Seal Kit	1	
11	7003116	Locknut	1	
12	7005365	Port Plug (Not Shown)	1	
13	70021648	Port Plug (Not Shown)	2	
14	7440030400	Grease Fitting (Not Shown)	2	
15	9935250032	Counterbalance Valve (Not Shown)	1	
16	9912250014	Tube	1	
17	9763250019	Rod	1	
18	9553250010	Head	1	
19	7698250012	Piston	1	

Eastern Wrecker Sales Inc

WRECKER BOOM CYLINDER - 7320000028

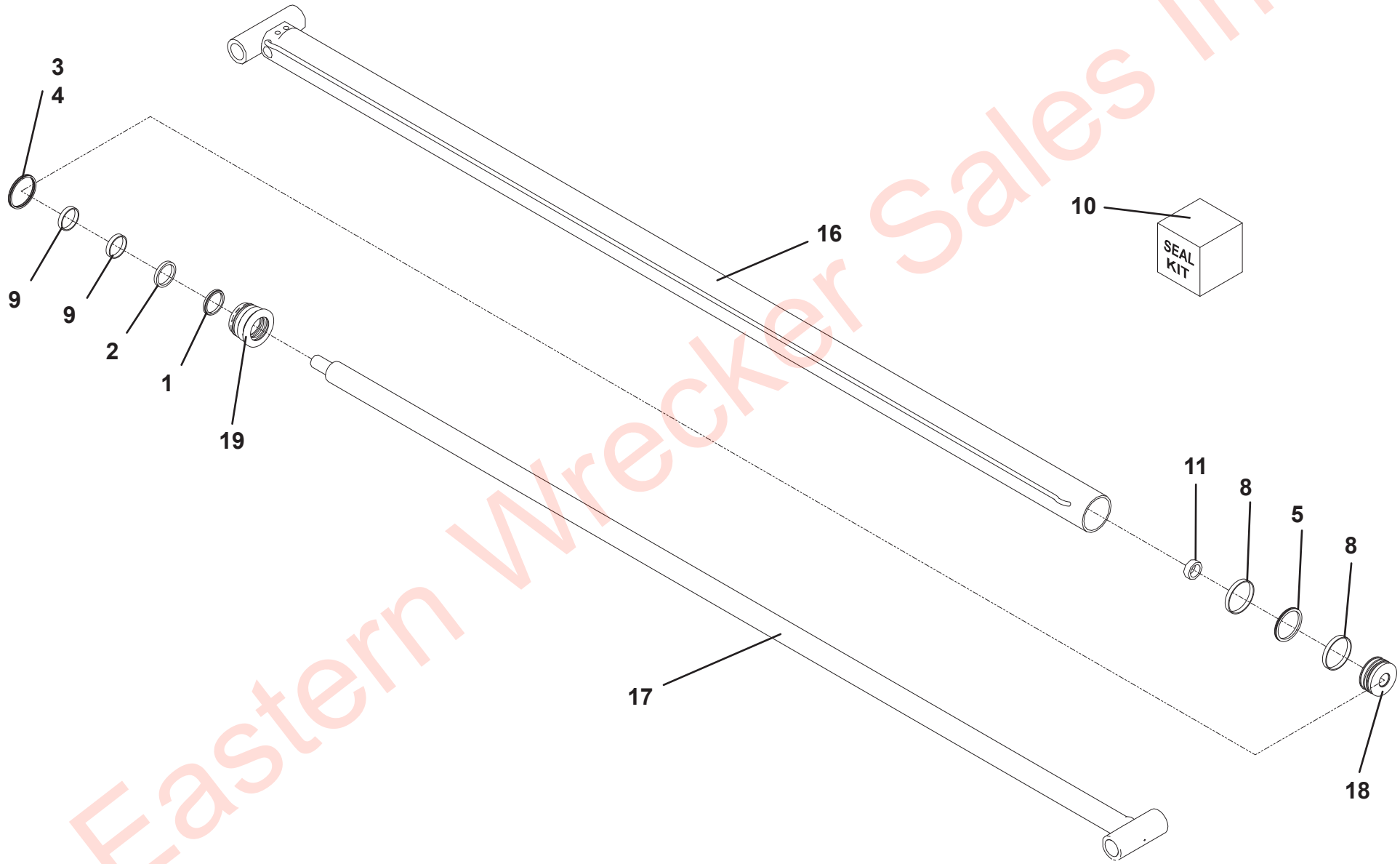

Eastern Wrecker Sales Inc

WRECKER BOOM CYLINDER - 7320000050

ITEM	PART NO.	DESCRIPTION	QTY	REV
	7320000050	Wrecker Boom Cylinder	Ref	B
1	83304143	Seal, Wiper	1	
2	9796250084	Seal, Wiper	1	
3	9796250071	Seal	1	
4	70050556	Seal	1	
5	70050557	Seal, “O”Ring	1	
6	70050558	Seal, “O”Ring	1	
7	9754250009	Ring, Back-up	1	
8	70050559	Seal, “O”Ring	2	
9	9754250054	Ring, Back-up	1	
10	9796250058	Seal, “O”Ring	1	
11	9796250149	Seal, “O”Ring	1	
12	70050560	Seal, “O”Ring	2	
13	70050561	Seal	2	
14	70050562	Seal	1	
15	70050563	Seal	1	
16	70050564	Seal	1	
17	70050565	Seal	1	
18	70050566	Seal, “O”Ring	2	
19	9754250014	Ring, Wear	4	
20	83304181	Ring, Wear	2	
21	83304140	Ring, Wear	3	
22	70050568	Ring, Wear	3	
23	9754250055	Ring, Wear	5	
24	70050569	Kit, Seal	1	
25	70050570*	Seal, “O”Ring	1	
26	70021774	Setscrew (Not Shown)	4	
27	70050572	Locknut	2	
28	7005365	Plug, Port (Not Shown)	2	
29	70021648	Plug, Port (Not Shown)	4	
30	7023593	Plug, Port (Not Shown)	5	
31	70050574	Valve, Check	1	
32	70050575	Valve, Counterbalance	1	
33	70050576	Valve, Relief	1	
34	70050577	Valve, Check	1	
35	70050578	Valve, Directional	1	
36	70050579	Assembly, Tube	1	
37	70050580	Assembly, Rod-Tube	1	
38	70050581	Assembly, Rod-Tube	1	
39	70050582	Head	1	
40	70050583	Piston	1	
41	70050584	Head	1	
42	70050585	Piston	1	
43	70050586	Spacer	1	
44	70050587	Adapter, RT	1	
45	70050588	Spacer	1	
46	70050589	Assembly, Valve	1	
47	70050590	Valve Retainer	1	
48	70050591	Assembly, Pad Plunger	1	
49	70050592	Plunger	1	

* Not Part of Seal Kit

Eastern Wrecker Sales Inc

WRECKER BOOM CYLINDER - 7320000050

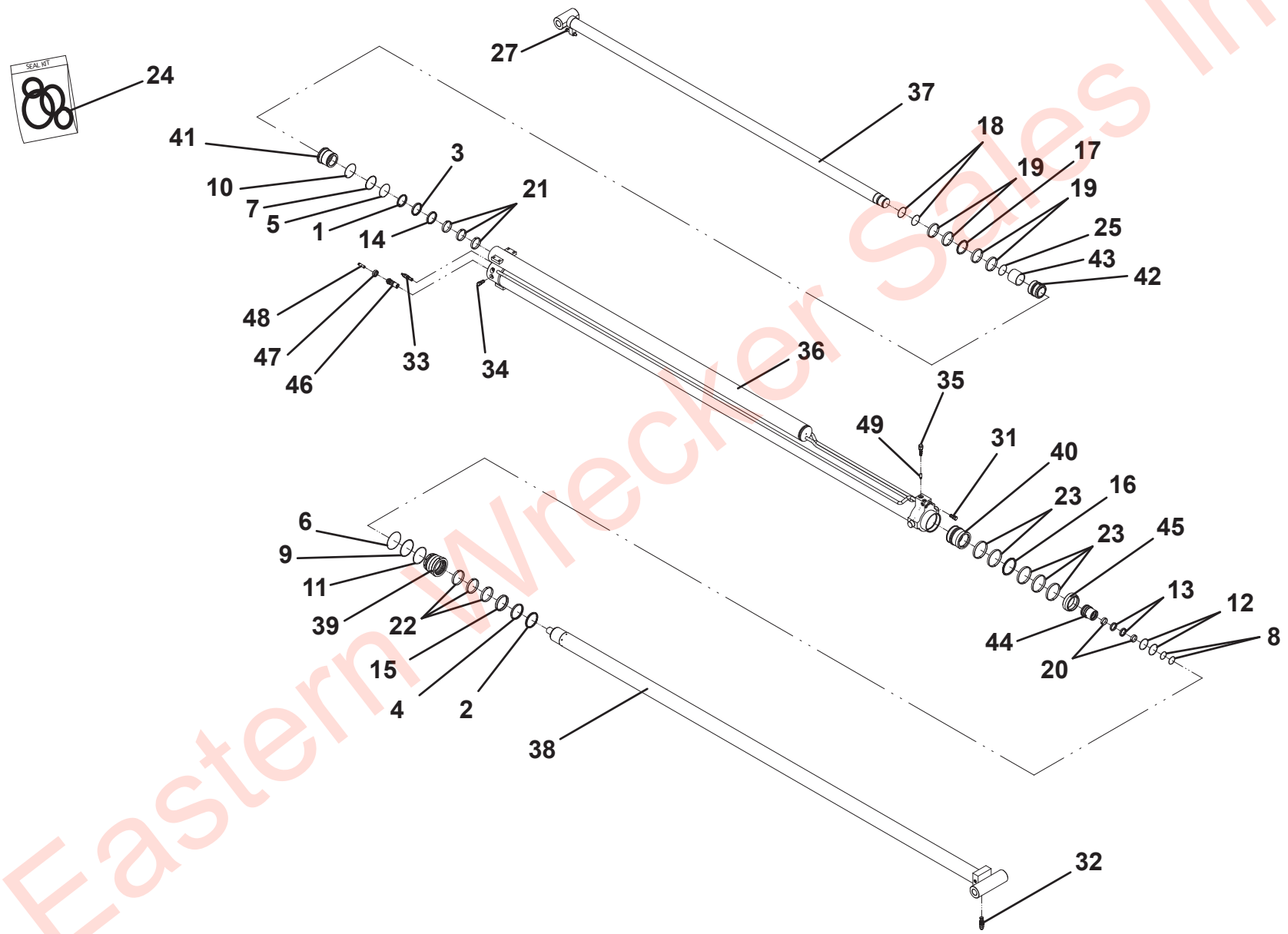

Eastern Wrecker Sales Inc

UNDERLIFT TILT CYLINDER - 7320000096

ITEM	PART NO.	DESCRIPTION	QTY	REV
	7320000096	Underlift Tilt Cylinder	Ref	B
1	9796250083	Seal, Wiper	1	
2	9754250011	Ring, Back-up	1	
3	9796250062	Seal, “O” Ring	1	
4	70050544	Seal	1	
5	9796250068	Seal, “O” Ring	1	
6	70050545	Seal	1	
7	9754250017	Ring, Wear	4	
8	80004049	Ring, Wear	4	
9	7577000063	Kit, Seal	1	
10	7005314	Locknut	1	
11	70021757	Setscrew (Not Shown)	1	
12	7005348	Grease Fitting	2	
13	70021648	Plug, Port (Not Shown)	2	
14	7005365	Plug, Port (Not Shown)	1	
15	70050215	Valve, Counterbalance	1	
16	70050594	Assembly, Tube	1	
17	70050595	Assembly, Rod	1	
18	9254250007	Headcap	1	
19	70050548	Piston	1	
20	70050549	Head	1	

Eastern Wrecker Sales Inc

UNDERLIFT TILT CYLINDER - 7320000096

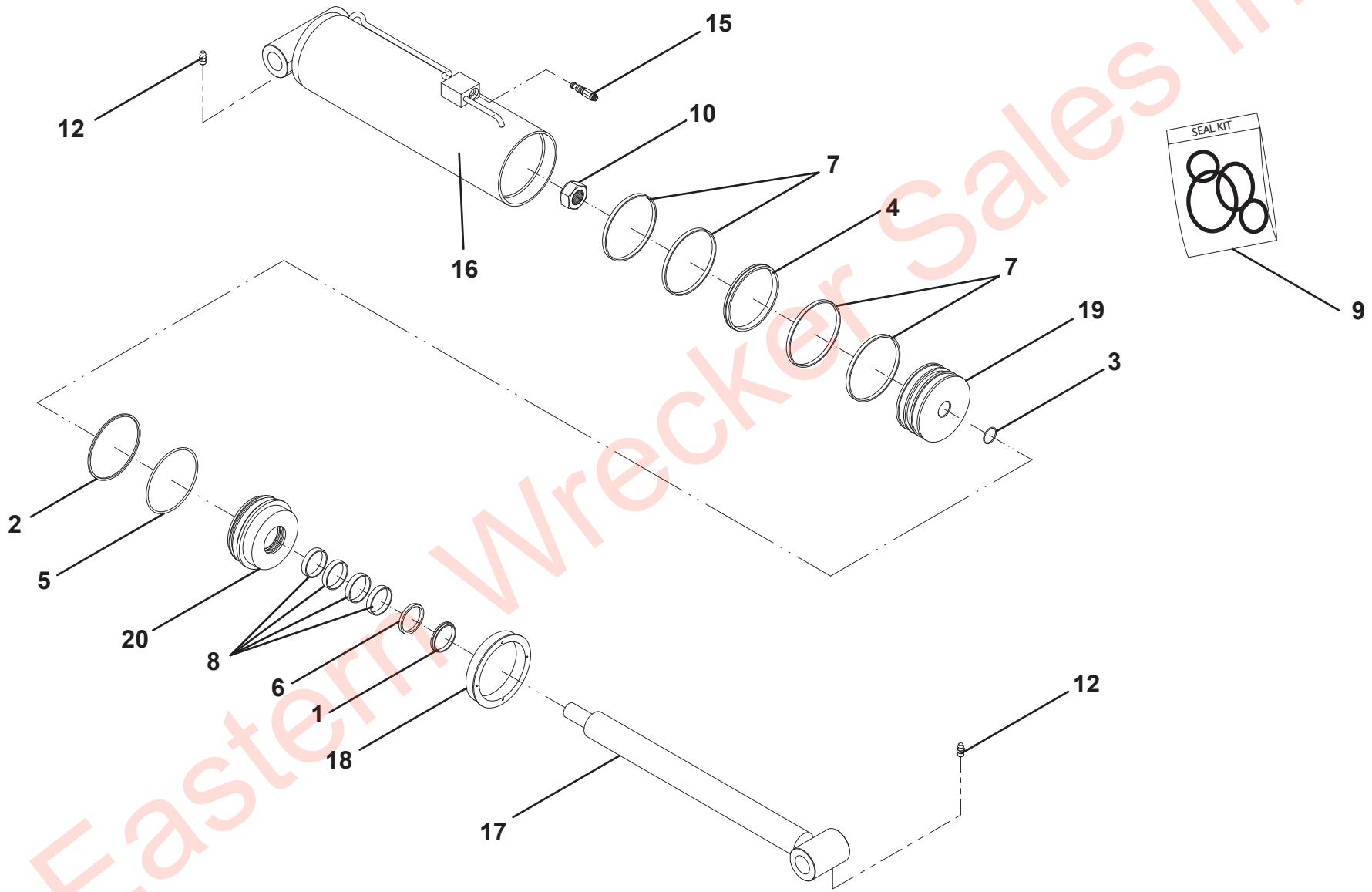

Eastern Wrecker Sales Inc

UNDERLIFT TILT CYLINDER - 7320000097

ITEM	PART NO.	DESCRIPTION	QTY	REV
	7320000097	Underlift Tilt Cylinder	Ref	B
1	9796250084	Wiper	1	
2	9796250059	O-Ring	1	
3	9796250065	O-Ring	1	
4	9796250077	Seal	1	
5	9754250012	Back-Up Ring	1	
6	9796250078	Seal	1	
7	9754250022	Wear Ring	2	
8	9754250023	Wear Ring	2	
9	70051199	Piston Head	1	
10	9661250019	Nut	1	
11	9701250006	Nylon Plug (Not Shown)	2	
12	83304181	Grease Fitting	2	
13	9786250005	Setscrew (Not Shown)	1	
14	9786250004	Setscrew (Not Shown)	4	
15	9935250032	Counterbalance	1	
16	70050232	Bushing	4	
17	9912250008	Tube Assembly	1	
18	9763250013	Rod Assembly	1	
19	9254250008	Headcap	1	
20	9698250005	Piston	1	
21	7577250188	Head	1	
22	70021648	Port Plug	2	
23	7005365	Port Plug	1	

Eastern Wrecker Sales Inc

UNDERLIFT TILT CYLINDER - 7320000097

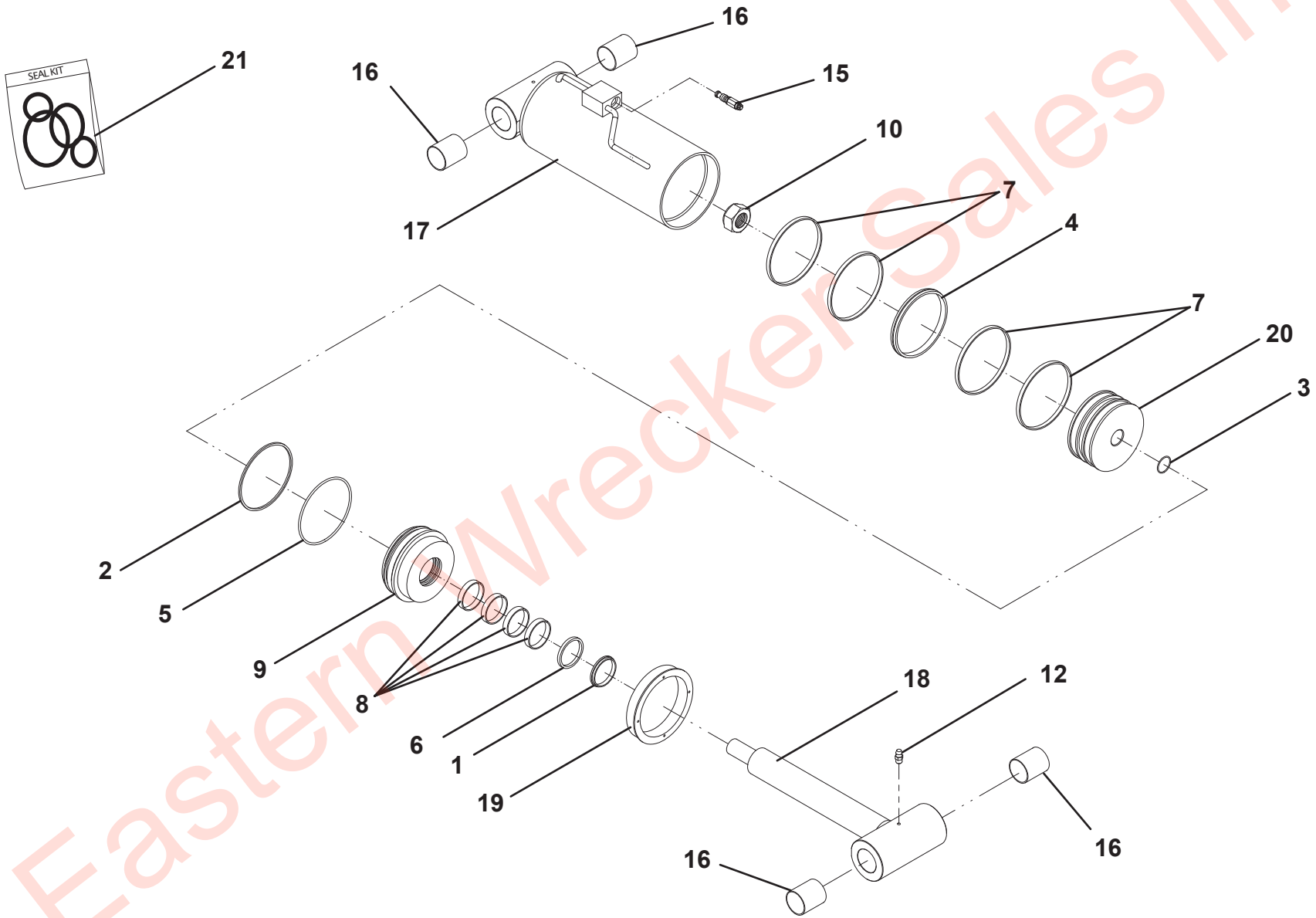

Eastern Wrecker Sales Inc

UNDERLIFT EXTENSION CYLINDER ASSEMBLY - 7320000026

ITEM	PART NO.	DESCRIPTION	QTY	REV
	7320000026	Underlift Extension Cylinder Assembly	Ref	B
1	9796250081	Seal, Wiper	2	
2	7019829	Seal	2	
3	7023518	Seal, “O” Ring	1	
4	9754250009	Ring, Back-up	2	
5	9796250057	Seal, “O” Ring	2	
6	9796250058	Seal, “O” Ring	2	
7	70050534	Seal, “O” Ring	2	
8	9796250073	Seal	2	
9	9754250014	Ring, Wear	3	
10	70050568	Ring, Wear	4	
11	7577250334	Kit, Seal	1	
12	7003116	Locknut	1	
13	70050535	Setscrew	4	
14	7005348	Grease Fitting (Not Shown)	2	
15	7005365	Plug, Port (Not Shown)	2	
16	70021648	Plug, Port (Not Shown)	2	
17	9935250025	Kit, Check Cartridge	1	
18	70050536	Assembly, Tube	1	
19	70050537	Assembly, Rod	1	
20	70050538	Assembly, Rod-Tube	1	
21	9553250010	Head	1	
22	7024101	Piston	1	
23	70050540	Piston	1	
24	70050541	Head	1	

Eastern Wrecker Sales Inc

UNDERLIFT EXTENSION CYLINDER ASSEMBLY - 7320000026

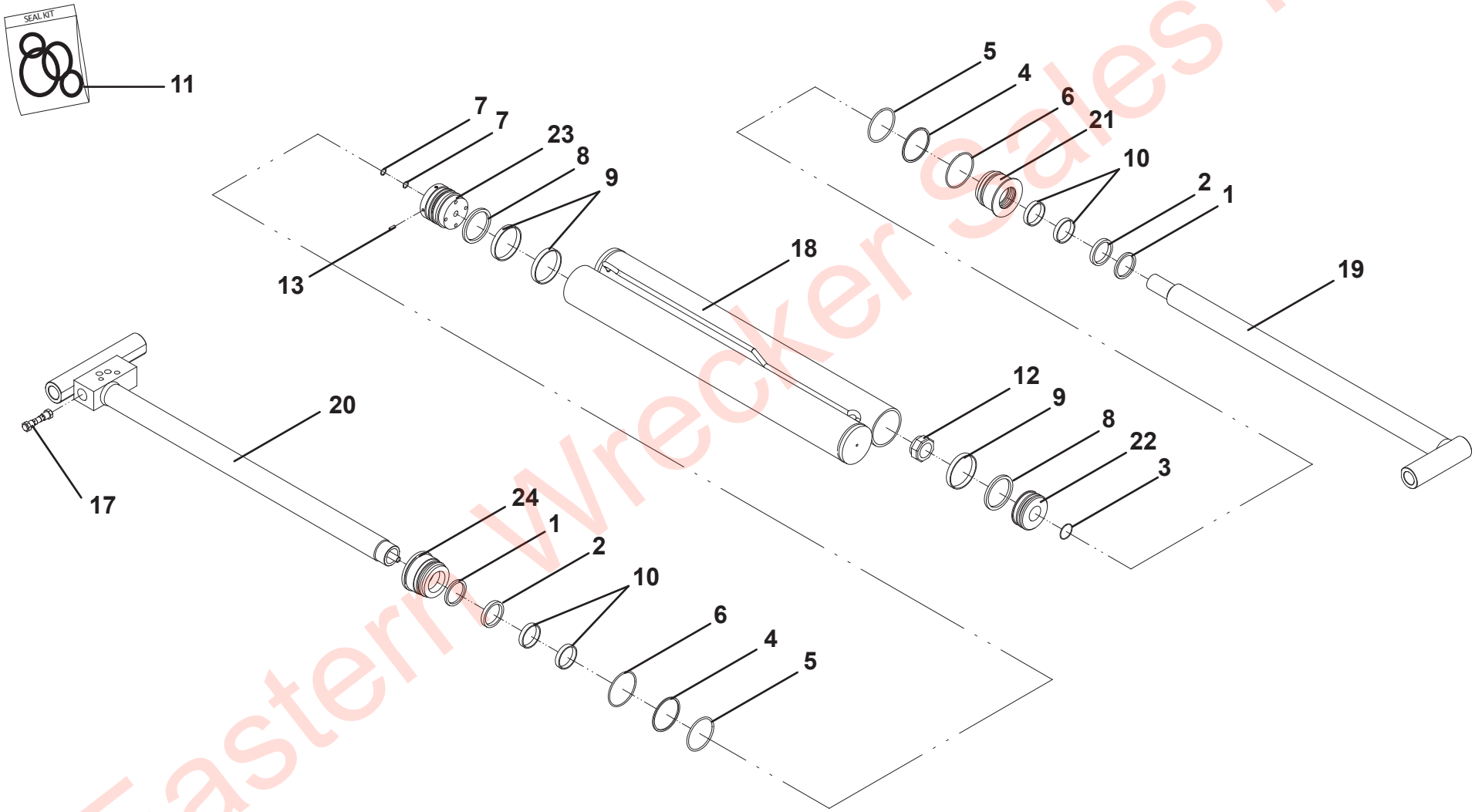

Eastern Wrecker Sales Inc

UNDERLIFT EXTENSION CYLINDER ASSEMBLY - 7320000068

ITEM	PART NO.	DESCRIPTION	QTY	REV
	7320000068	Underlift Extension Cylinder Assembly	Ref	B
1	9796250081	Seal, Wiper	2	
2	7019829	Seal	2	
3	7023518	Seal, “O” Ring	1	
4	9754250009	Ring, Back-up	2	
5	9796250057	Seal, “O” Ring	2	
6	9796250058	Seal, “O” Ring	2	
7	70050534	Seal, “O” Ring	2	
8	9796250073	Seal	2	
9	9754250014	Ring, Wear	3	
10	80004056	Ring, Wear	4	
11	7577250334	Kit, Seal	1	
12	7003116	Locknut	1	
13	70050535	Setscrew	4	
14	7005348	Grease Fitting (Not Shown)	2	
15	7005365	Plug, Port (Not Shown)	2	
16	70021648	Plug, Port (Not Shown)	2	
17	9935250025	Kit, Check Cartridge	1	
18	70050550	Assembly, Tube	1	
19	70050551	Assembly, Rod	1	
20	70050552	Assembly, Rod-Tube	1	
21	9553250010	Head	1	
22	7024101	Piston	1	
23	70050540	Piston	1	
24	70050541	Head	1	

Eastern Wrecker Sales Inc

UNDERLIFT EXTENSION CYLINDER ASSEMBLY - 7320000068

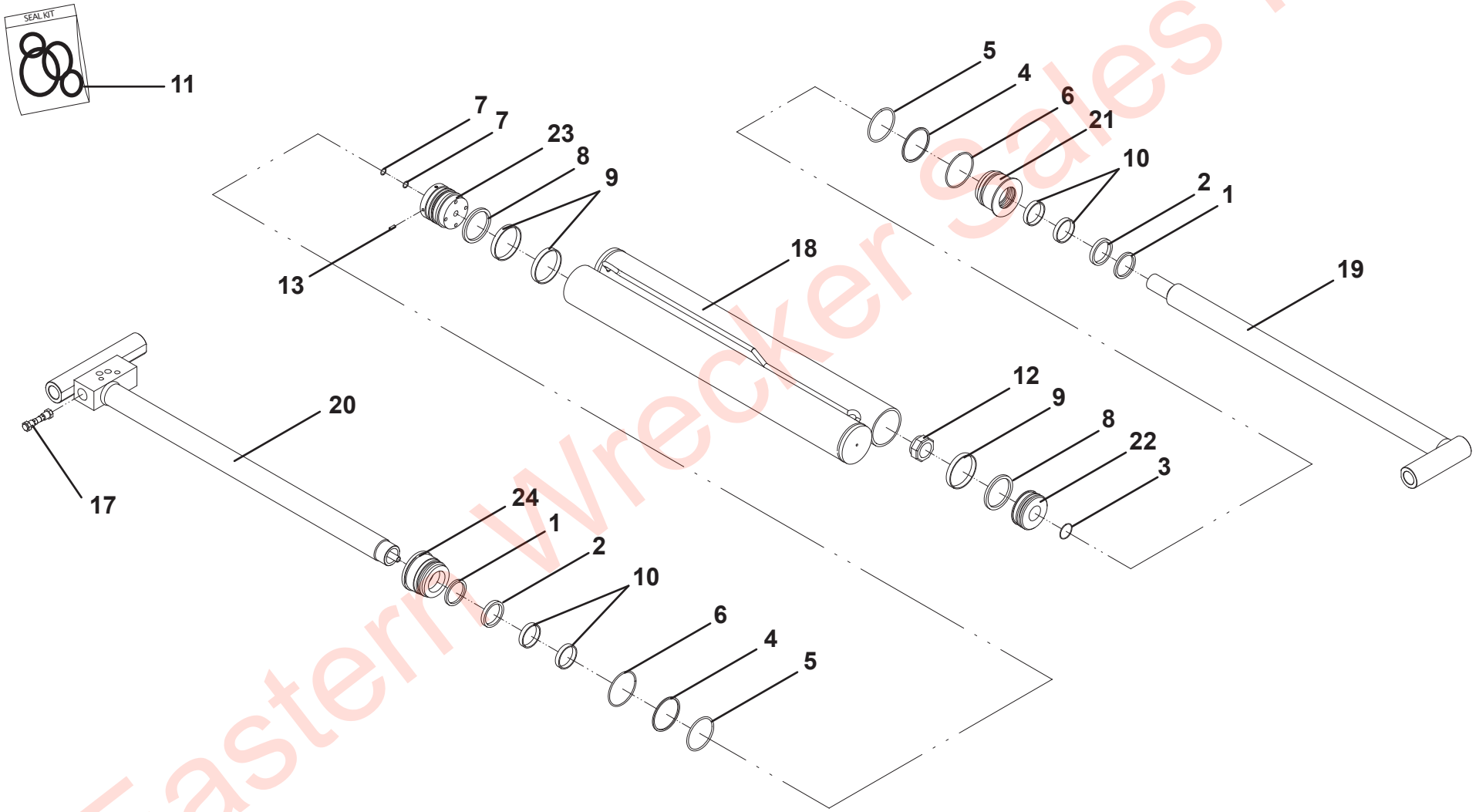

Eastern Wrecker Sales Inc

UNDERLIFT EXTENSION CYLINDER ASSEMBLY - 7320000038

ITEM	PART NO.	DESCRIPTION	QTY	REV
	7320000038	Underlift Extension Cylinder Assembly	Ref	C
1	9796250081	Seal, Wiper	2	
2	7019829	Seal	2	
3	7023518	Seal, “O” Ring	1	
4	9754250009	Ring, Back-up	2	
5	9796250057	Seal, “O” Ring	2	
6	9796250058	Seal, “O” Ring	2	
7	70050534	Seal, “O” Ring	2	
8	9796250073	Seal	2	
9	9754250014	Ring, Wear	3	
10	70050568	Ring, Wear	4	
11	7577250334	Kit, Seal	1	
12	7003116	Locknut	1	
13	70050535	Setscrew	4	
14	7005348	Grease Fitting (Not Shown)	2	
15	7005365	Plug, Port (Not Shown)	2	
16	70021648	Plug, Port (Not Shown)	2	
17	9935250025	Kit, Check Cartridge	1	
18	70051197	Assembly, Tube	1	
19	70051196	Assembly, Rod	1	
20	70050075	Assembly, Rod-Tube	1	
21	9553250010	Head	1	
22	7024101	Piston	1	
23	70050540	Piston	1	
24	70050541	Head	1	

Eastern Wrecker Sales Inc

UNDERLIFT EXTENSION CYLINDER ASSEMBLY - 7320000038

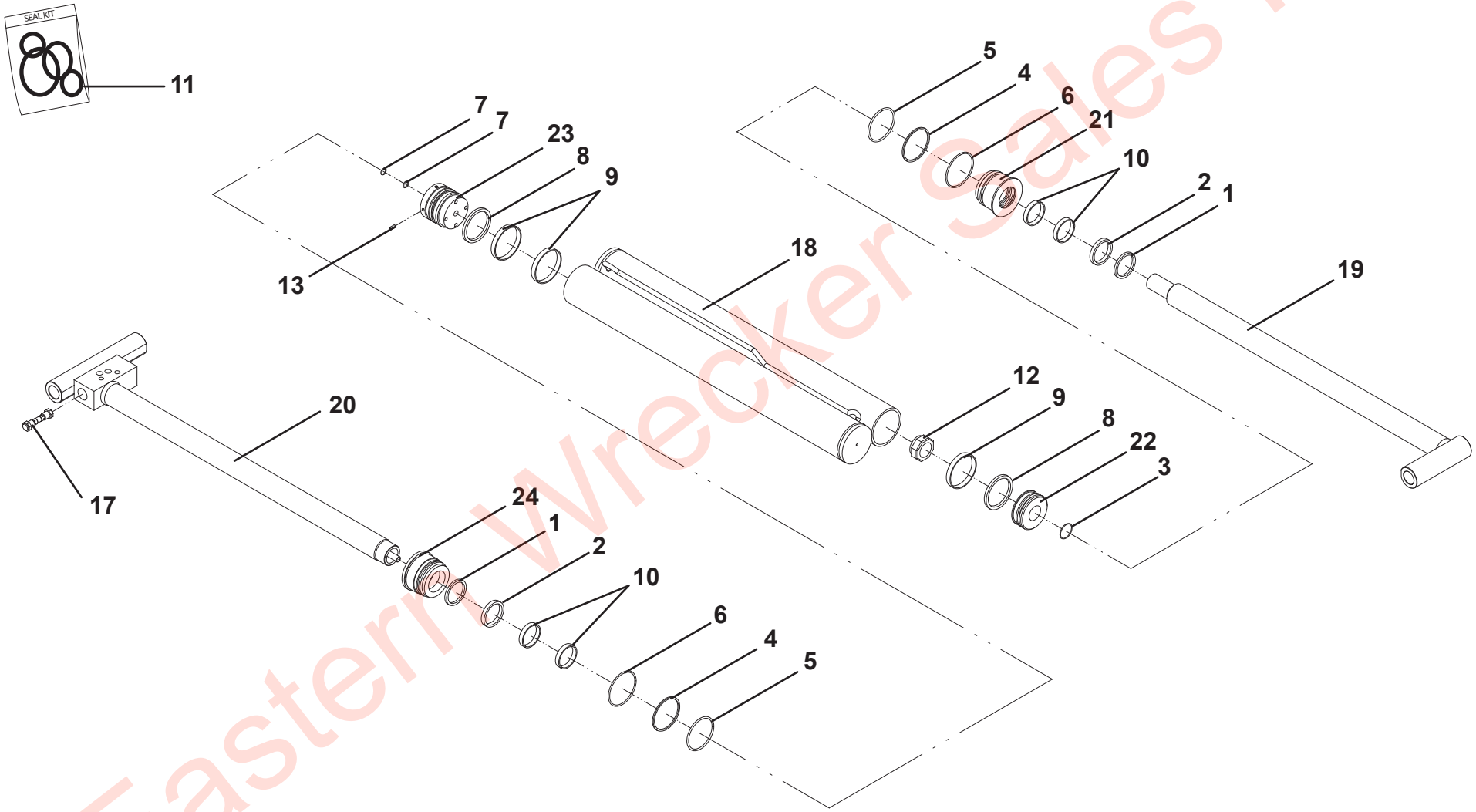

Eastern Wrecker Sales Inc

THIS PAGE INTENTIONALLY LEFT BLANK

Eastern Wrecker Sales Inc

SECTION 6 - HYDRAULIC

Eastern Wrecker Sales Inc

SUBFRAME HYDRAULIC TUBING W/O WINCH

ITEM	PART NO.	DESCRIPTION	QTY	REV
	3912000052	Subframe Hydraulic Tubing W/O Winch	Ref	A
1	7274000030	Clamp	12	
2	7274000049	Clamp	20	
3	7209000024	Bushing	12	
4	7209000032	Bushing	6	
5	7209000031	Bushing	4	
6	7209000033	Bushing	4	
7	7661000022	Nut, 0.31” - 18NC	18	
8	7661000027	Stacking Nut	30	
9	7007000036	Adapter	24	
10	7950150000	Washer, 0.31” ID	48	
11	7115150650	Capscrew, 0.31” - 18NC x 0.75”	32	
12	7115150850	Capscrew, 0.31” - 18NC x 1.00”	16	
13	7445080825	Fitting	2	
14	7445101025	Fitting	4	
15	7445121225	Fitting	2	
16	7443000209	Fitting	4	
17	7209000066	Bushing	6	
18	7912000068*	Tube	2	
19	7912000069*	Tube	2	
20	7912000070*	Tube	2	
21	7912000341*	Tube	6	

* Also Available In Tubing Kit - 7577000597

Eastern Wrecker Sales Inc

SUBFRAME HYDRAULIC TUBING W/O WINCH

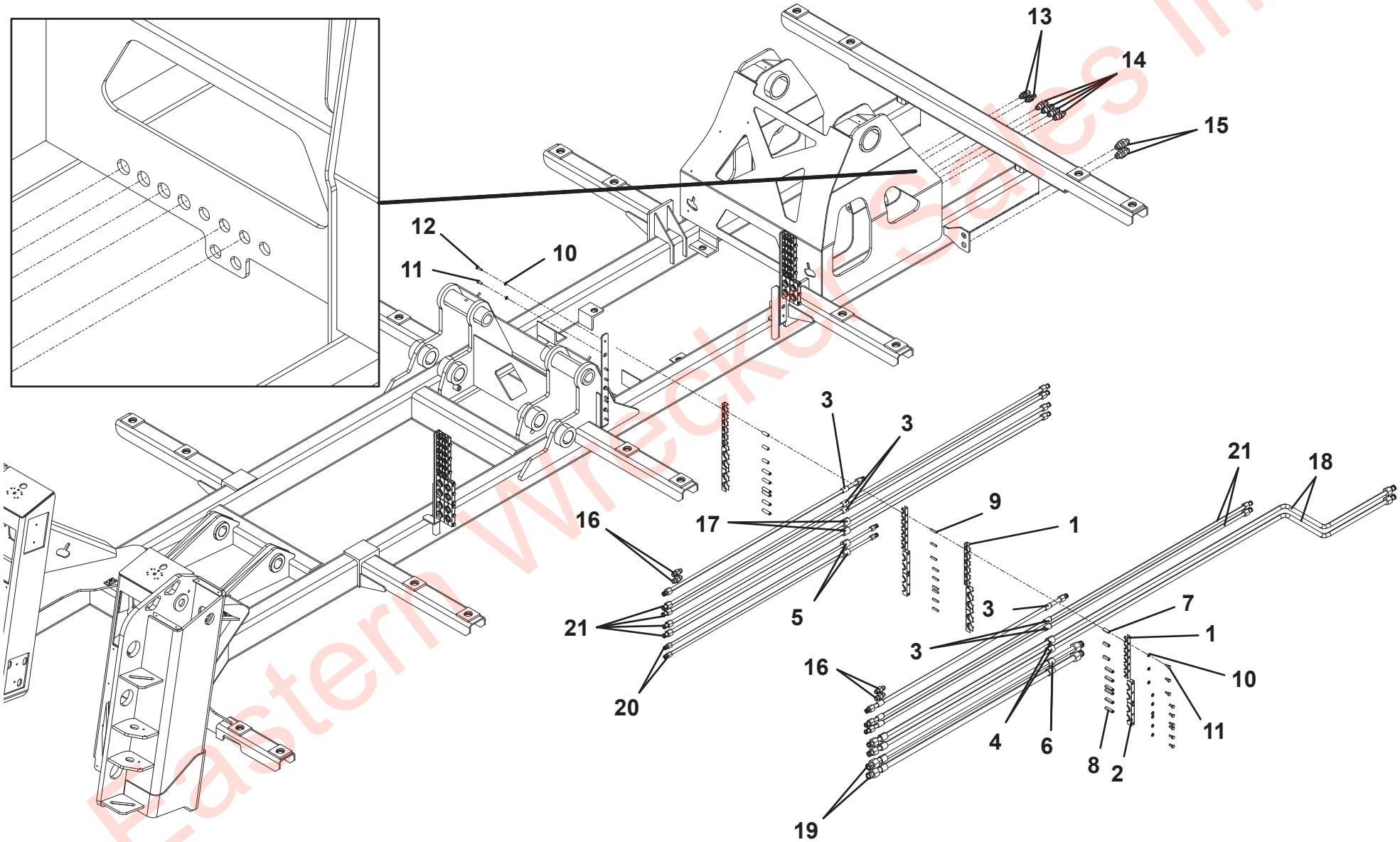

Eastern Wrecker Sales Inc

SUBFRAME HYDRAULIC TUBING W/ WINCH

ITEM	PART NO.	DESCRIPTION	QTY	REV
	3912000051	Subframe Hydraulic Tubing W/ Winch	Ref	A
1	7274000030	Clamp	12	
2	7274000049	Clamp	20	
3	7209000024	Bushing	12	
4	7209000032	Bushing	6	
5	7209000031	Bushing	4	
6	7209000033	Bushing	4	
7	7661000022	Nut, 0.31” - 18NC	18	
8	7661000027	Stacking Nut	30	
9	7007000036	Adapter	24	
10	7950150000	Washer, 0.31” ID	48	
11	7115150650	Capscrew, 0.31” - 18NC x 0.75”	32	
12	7115150850	Capscrew, 0.31” - 18NC x 1.00”	16	
13	7445080825	Fitting	2	
14	7445101025	Fitting	4	
15	7445121225	Fitting	2	
16	7443000209	Fitting	4	
17	7209000066	Bushing	6	
18	7912000068*	Tube	2	
19	7912000069*	Tube	2	
20	7912000070*	Tube	2	
21	7912000341*	Tube	6	
22	7912000238*	Tube	2	

* Also Available In Tubing Kit - 7577000596

Eastern Wrecker Sales Inc

SUBFRAME HYDRAULIC TUBING W/ WINCH

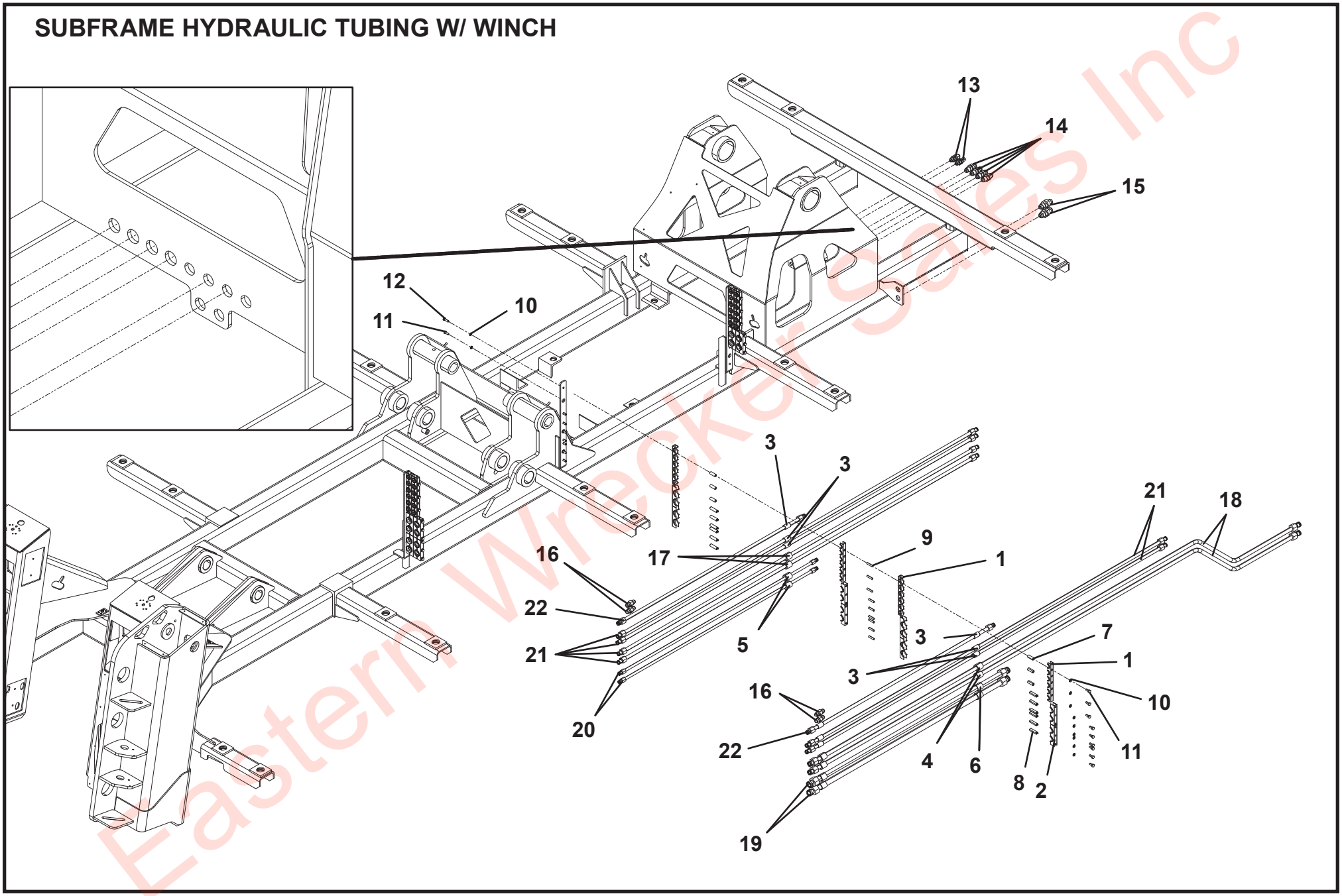

Eastern Wrecker Sales Inc

HYDRAULIC TANK INSTALLATION - W/O UL WINCH

ITEM	PART NO.	DESCRIPTION	QTY	REV
	2507650009	Hydraulic Tank Installation - W/O UL Winch	Ref	B
1	3750000022	Hydraulic Tank Assembly (See Separate Breakdown in this Section)	1	
2	7115181850	Capscrew, 0.50” - 13NC x 2.25”	4	
3	7950180141	Flatwasher, 0.50” ID	4	
4	7660182601	Locknut, 0.50” - 13NC	4	
5	7949000015	Washer, Head	4	
6	7949000016	Washer, Tail	4	
7	7636000006	Rubber Mount	4	

Eastern Wrecker Sales Inc

HYDRAULIC TANK INSTALLATION - W/O UL WINCH

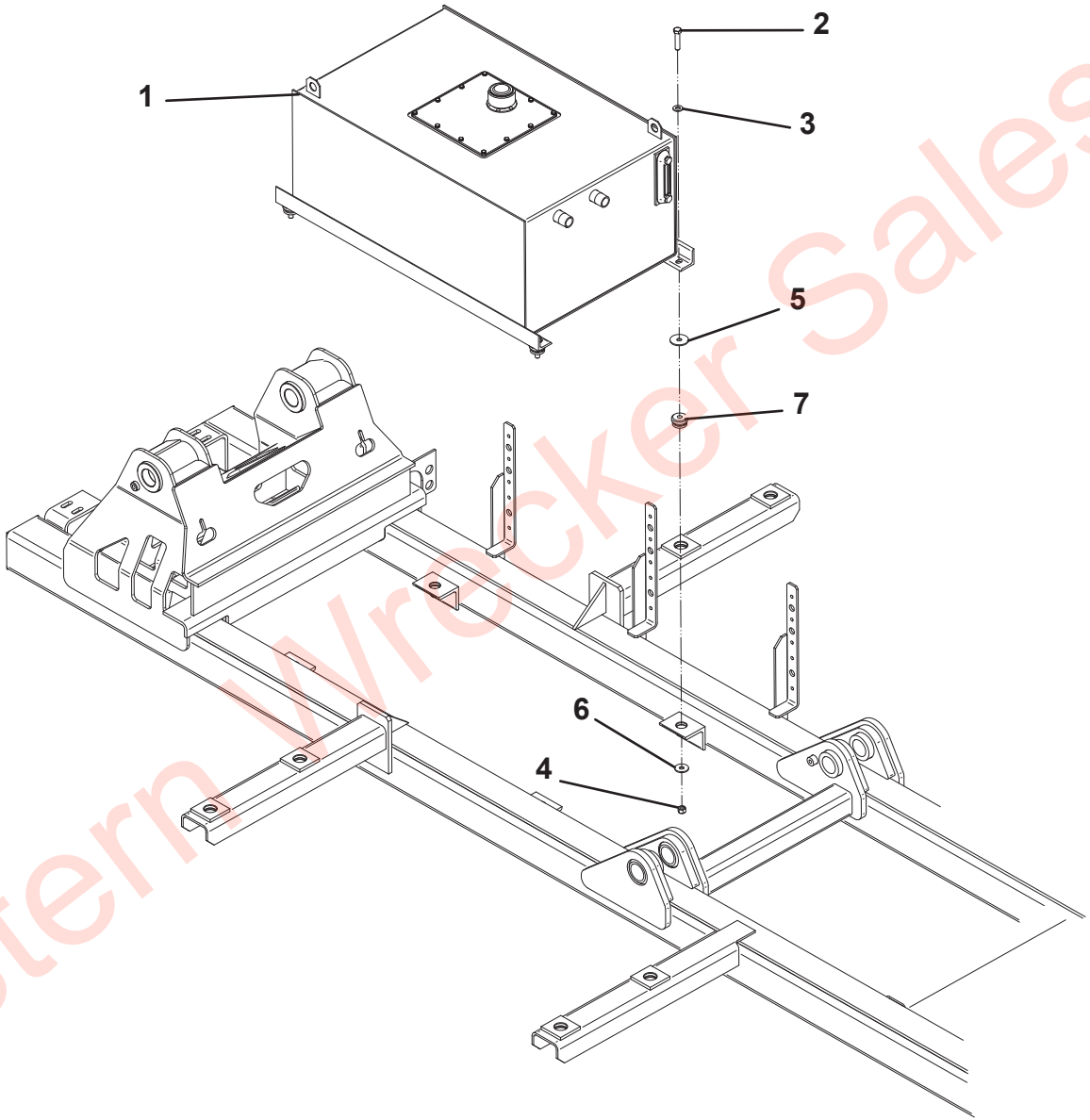

Eastern Wrecker Sales Inc

HYDRAULIC TANK ASSEMBLY - W/O UL WINCH

ITEM	PART NO.	DESCRIPTION	QTY	REV
	3750000022	Hydraulic Tank Assembly - W/O UL Winch	Ref	B
1	3750000021	Hydraulic Tank	1	
2	7183000004	Breather, Filler Cap	1	
3	7470000003	Gauge	1	
4	7796000051	Gasket, Oil Tank Cover	1	
5	4706002235	Plate	1	
6	7115140650	Capscrew, 0.25” - 20NC x 0.75”	12	
7	7950140000	Lockwasher, 0.25” ID	12	
8	7444120014	Plug	1	
9	7444160011	Plug	2	

Eastern Wrecker Sales Inc

HYDRAULIC TANK ASSEMBLY - W/O UL WINCH

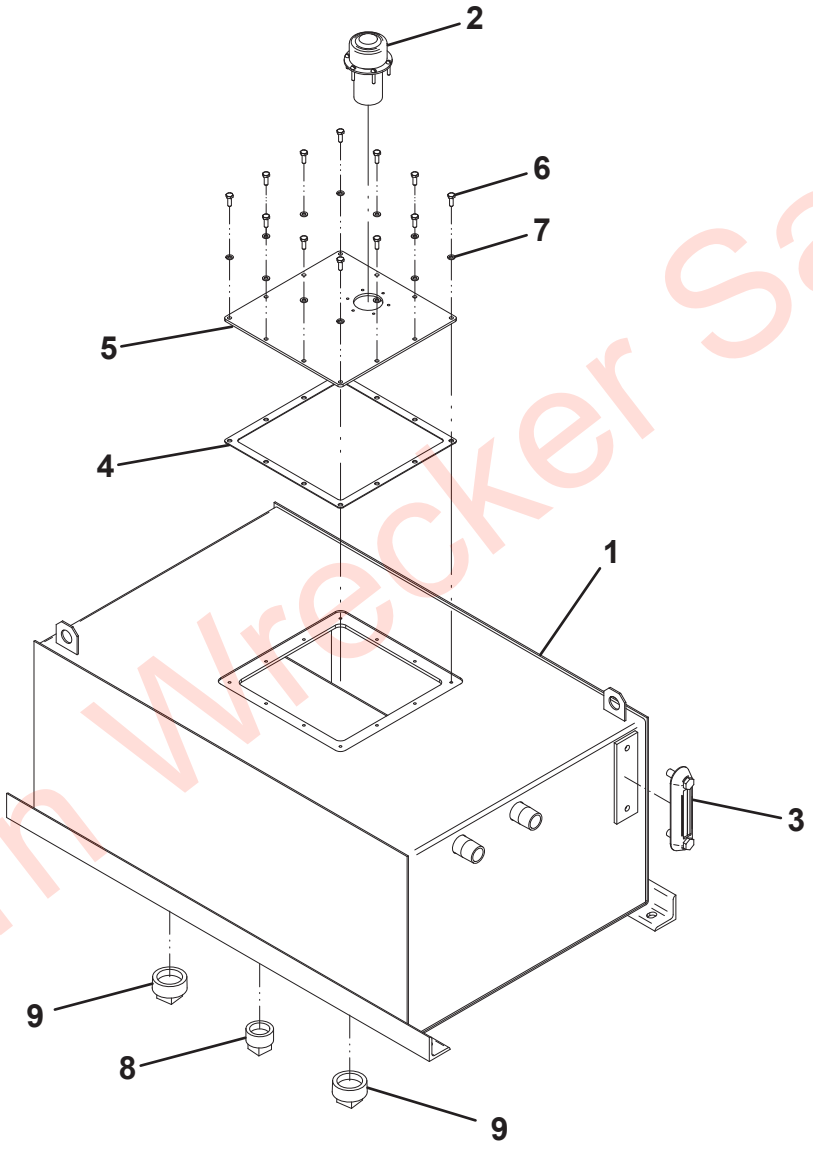

Eastern Wrecker Sales Inc

HYDRAULIC TANK INSTALLATION - W/ UL WINCH

ITEM	PART NO.	DESCRIPTION	QTY	REV
	2507650077	Hydraulic Tank Installation - W/ UL Winch	Ref	B
1	7115181850	Capscrew, 0.50”-13NC x 2.25”	4	
2	7950180141	Flatwasher, 0.50” ID	4	
3	7660182601	Locknut, 0.50”-13NC	4	
4	7949000015	Washer	4	
5	7949000016	Washer	4	
6	7636000006	Mount	4	
7	3750000055	Hydraulic Tank (See Separate Breakdown in this Section)	1	

Eastern Wrecker Sales Inc

HYDRAULIC TANK INSTALLATION - W/ UL WINCH

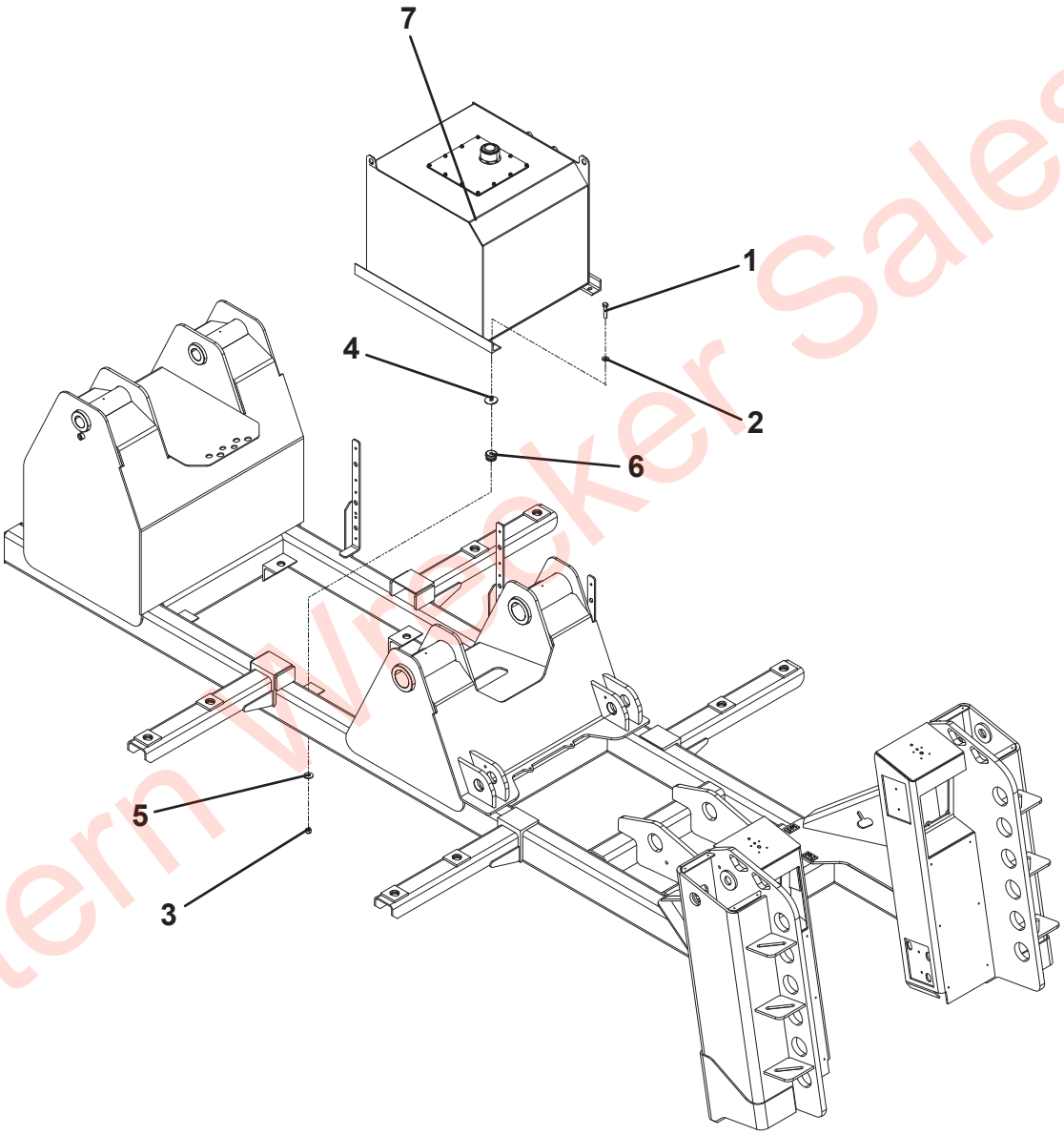

Eastern Wrecker Sales Inc

HYDRAULIC TANK ASSEMBLY - W/ UL WINCH

ITEM	PART NO.	DESCRIPTION	QTY	REV
	3750000055	Hydraulic Tank Assembly - W/ UL Winch	Ref	C
1	3750000056	Hydraulic Tank	1	
2	7470000003	Gauge	1	
3	7701000025	Plug	1	
4	7796000051	Gasket	1	
5	4706002235	Plate	1	
6	7790141253	Screw, 0.25”-20NC x 0.75”	12	
7	7950140000	Lockwasher, 0.25” ID	12	
8	7183000004	Breather Cap	1	

Eastern Wrecker Sales Inc

HYDRAULIC TANK ASSEMBLY - W/ UL WINCH

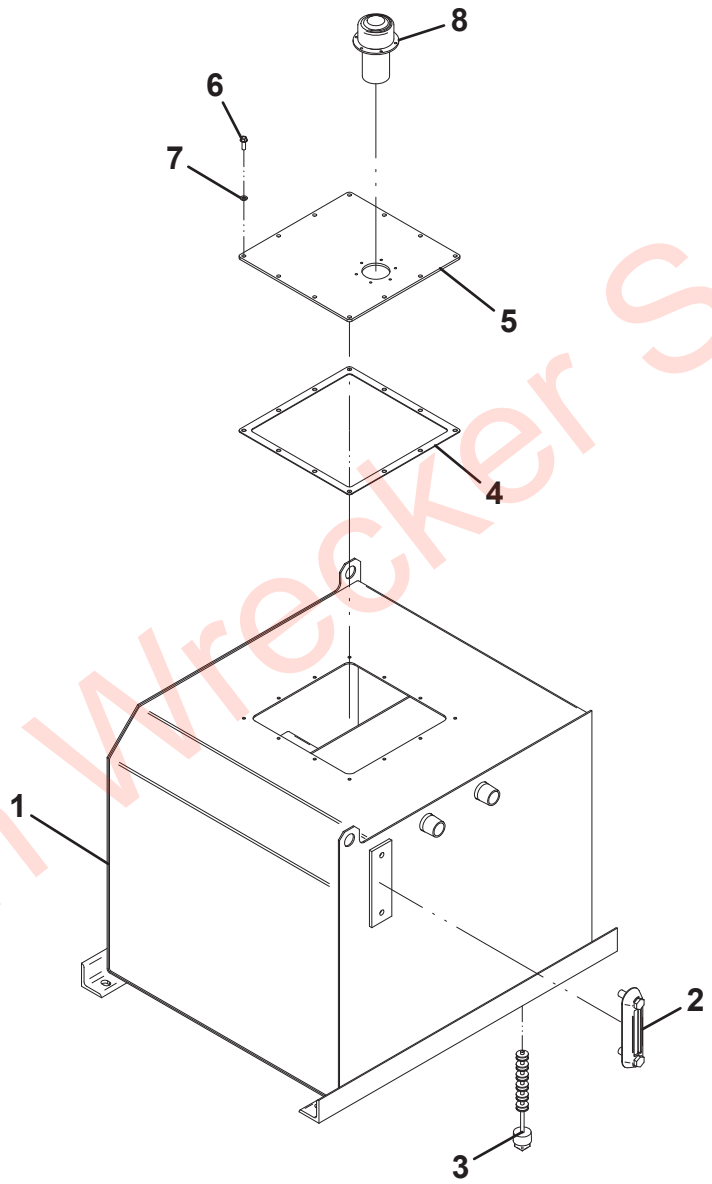

Eastern Wrecker Sales Inc

REAR SPADE TUBING

ITEM	PART NO.	DESCRIPTION	QTY	REV
	3912000010	Rear Spade Tubing	Ref	D
1	1001137487	Clamp	1	
2	1001136447	Clamp	5	
3	7912000245*	Tube Assembly	1	
4	7912000246*	Tube Assembly	1	
5	7912000247*	Tube Assembly	1	
6	7912000248*	Tube Assembly	1	

* Also Available In Tubing Kit - 7577000637

Eastern Wrecker Sales Inc

REAR SPADE TUBING

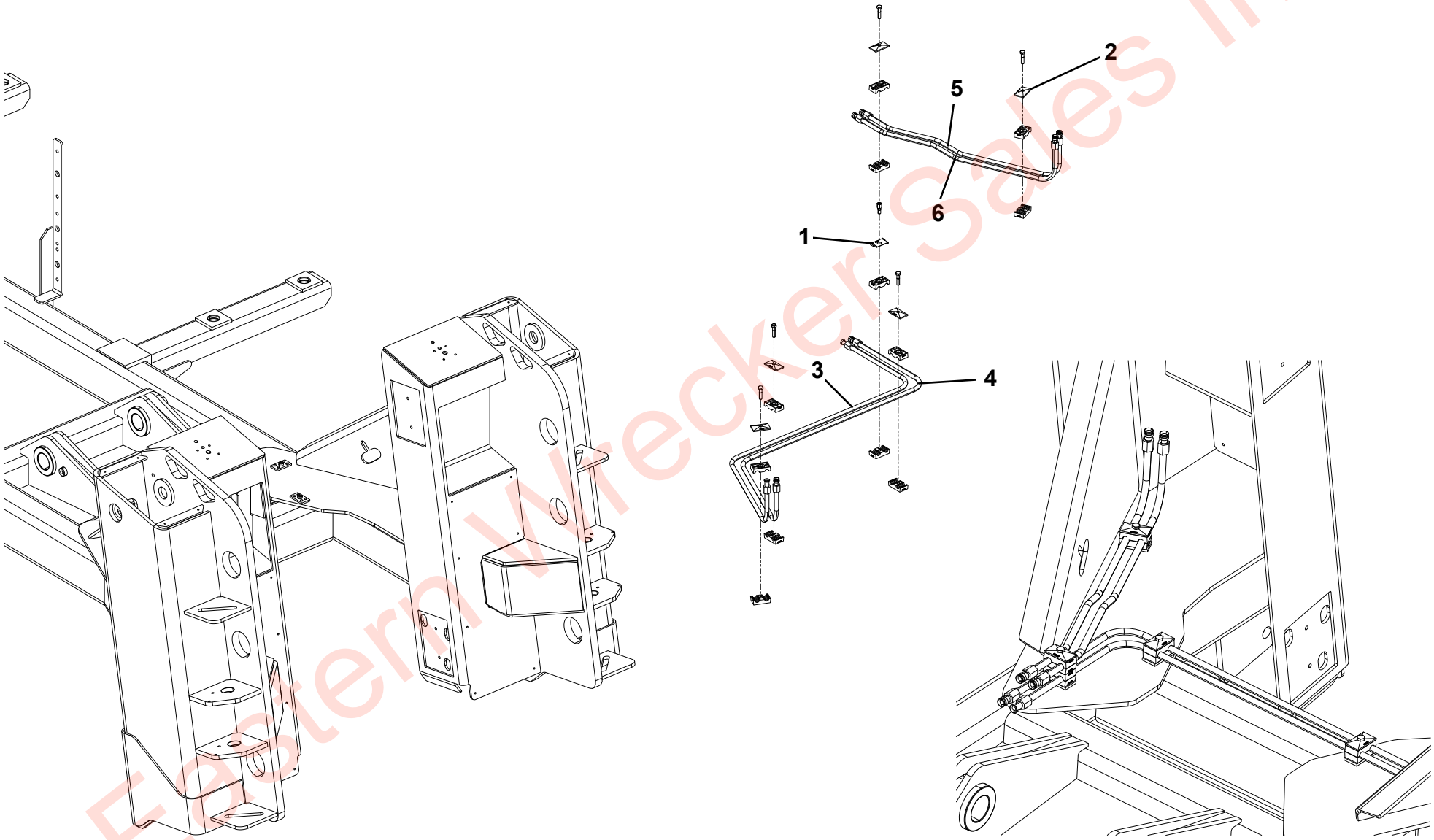

Eastern Wrecker Sales Inc

POWER TAKE OFF - CS SERIES

ITEM	PART NO.	DESCRIPTION	QTY	REV
	NPN	Power Take Off - CS Series	Ref	
1	70050316	Fuse	1	
2	70050315	Splice	1	
3	70050312	Wire	6 ft	
4	70050314	Connector	1	
5	70050325	Grommet	1	
6	70050328	Harness, Wire	1	
7	7870000062	Switch, Pressure	1	
8	70050329	Fitting, Elbow	1	
9	70050330	Nipple	1	
10	70050313	Terminal	2	
11	70050331	Connector	3	
12	7706000005	Bracket, Switch	1	
13	7706000001	Plate	1	
14	7870000045	Switch	1	
15	70050319	Kit, Bolt	1	
16	7443000431	Fitting (Also available in kit #70050467)	1	
17	7443000244	Fitting (Also available in kit #70050467)	1	
18	70050468	Hose (Also available in kit #70050467)	1	

Eastern Wrecker Sales Inc

POWER TAKE OFF - CS SERIES

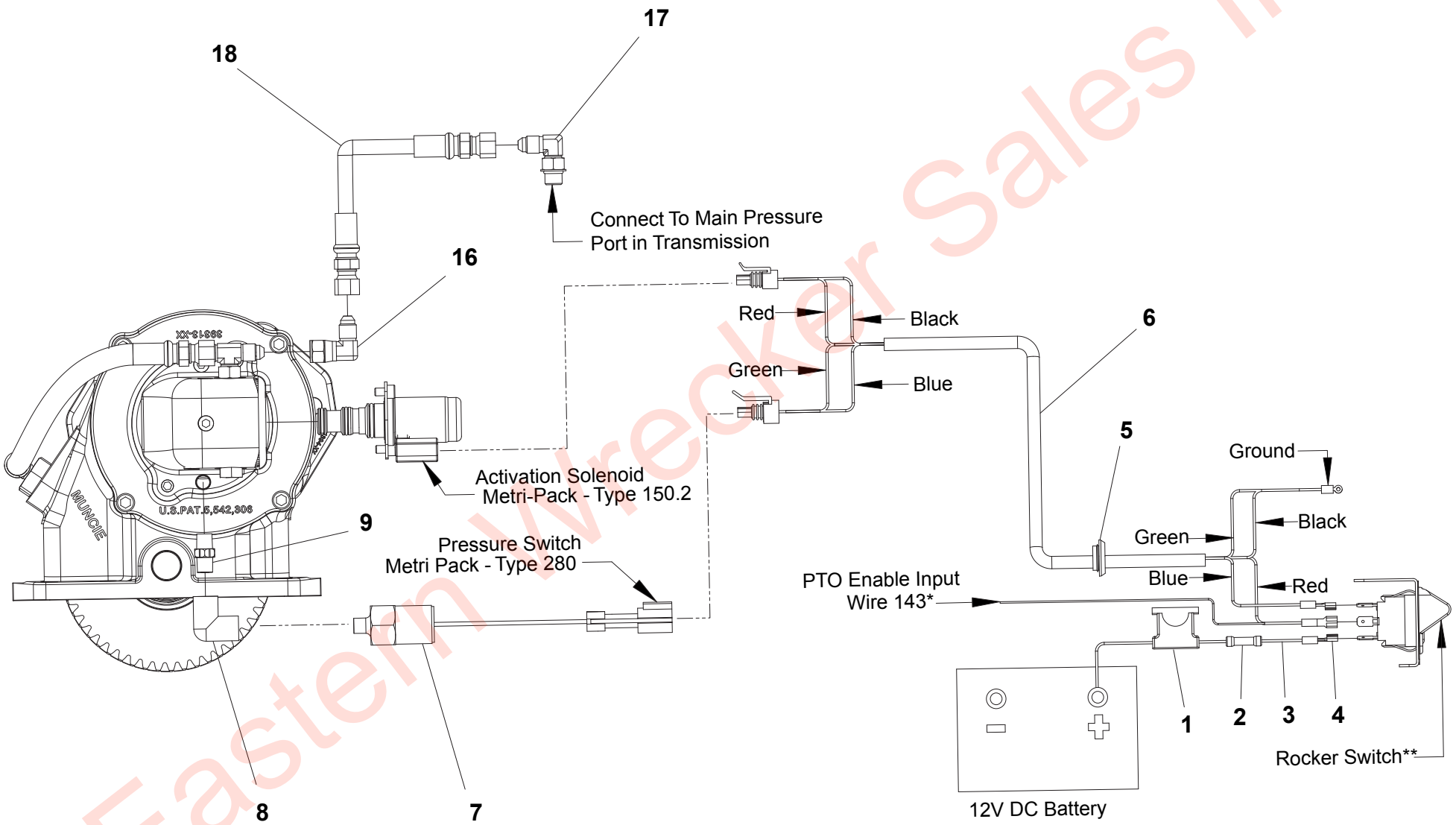

Eastern Wrecker Sales Inc

POWER TAKE OFF - SH SERIES

ITEM	PART NO.	DESCRIPTION	QTY	REV
	NPN	Power Take Off - SH Series	Ref	
1	7590000049	Assembly. - Light 12V	1	
2	70050316	Assembly, Fuse	1	
3	7935000104	Valve, Air	1	
4	7870000062	Switch, Pressure	1	
5	9935740034	Valve, Pressure Protection	1	
6	70050308	Nipple, Pipe	1	
7	70050668	Wiring Pigtail	1	
8	70050310	Fitting	1	
9	70050320	Connector	2	
10	70050309	Connector	1	
11	70050669	Plug	1	
12	70050313	Terminal	2	
13	70050312	Wire	12 ft	
14	70050977	Terminal, Closed End Crimp	3	
15	7565000019	Tubing, Air	1	
16	9443760018	Fitting	1	
17	70050322	Bracket, Dash (Not Shown)	1	
18	7706000004	Plate, Face (Not Shown)	1	
19	70050319	Kit, Bolt (Not Shown)	1	

Eastern Wrecker Sales Inc

POWER TAKE OFF - SH SERIES

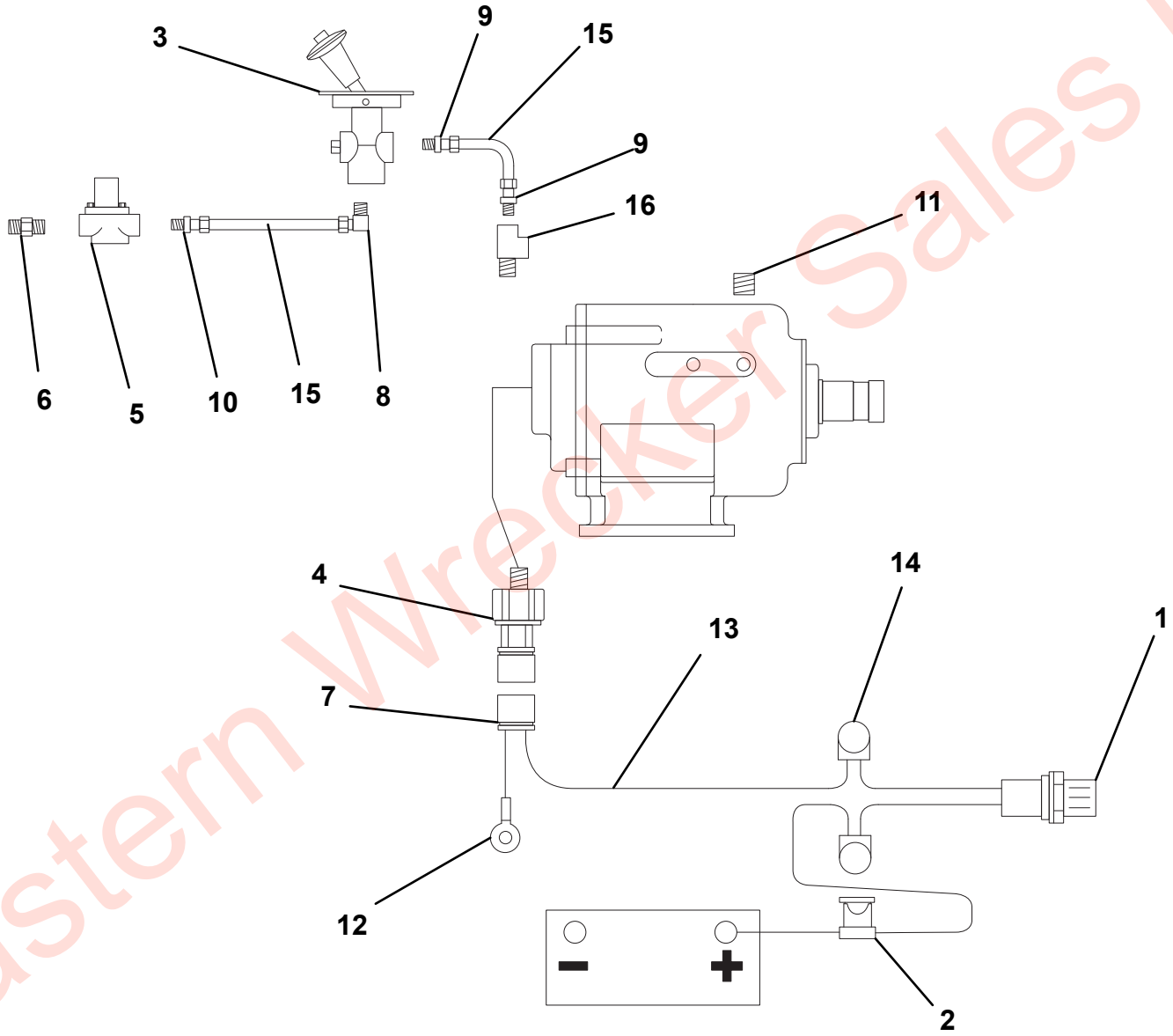

Eastern Wrecker Sales Inc

HYDRAULIC SUPPLY PRESSURE INSTALLATION

ITEM	PART NO.	DESCRIPTION	QTY	REV
	1001218660	Hydraulic Supply Pressure Installation	Ref	A
1	7430000010	Filter	1	
2	7650100137	Nipple	1	
3	7444121050	Reducer	1	
4	7935000116	Ball Valve	1	
5	7444121271	Elbow	A/R	
6	7443000130	Fitting	A/R	
7	7274000028	Clamp	2	
8	8565000026	Hose	19FT	
9	1001145056	Elbow	1	
10	7445121645	Elbow	2	
11	4567160111	Hose - 245”-285” Wheel Base	2	
	4567160146	Hose - 275”-325” Wheel Base	2	
	1001218610	Hose - 326”-365” Wheel Base	2	
	1001204565	Hose - 366”-405” Wheel Base	2	
	1001218611	Hose - 406”-445” Wheel Base	2	
12	7115181050	Capscrew, 0.50"-13NC x 1.25"	2	
13	7950180000	Lockwasher, 0.59" ID	2	
14	4178000248	Bracket	1	
15	7274000076	Clamp	10	
16	7785152420	Screw, 0.31" - 18 x 1.50"	10	
17	7660152601	Locknut 0.31"-18NC	20	
18	7115151050	Capscrew, 0.31"-18NC x 1.25"	10	
19	7950150161	Flatwasher, 0.31" ID	10	
20	4706003844	Plate	10	
21	7274000041	Clamp	20	
22	7274000071	Clamp	10	
23	7115140850	Capscrew, 0.25"-20NC x 1.00"	20	
24	7950140152	Washer, 0.25" ID	20	
25	7660142601	Locknut, 0.25" -20NC	20	
26	7577000213	Flange	1	
27	7443000254	Fitting	1	

Eastern Wrecker Sales Inc

HYDRAULIC SUPPLY PRESSURE INSTALLATION

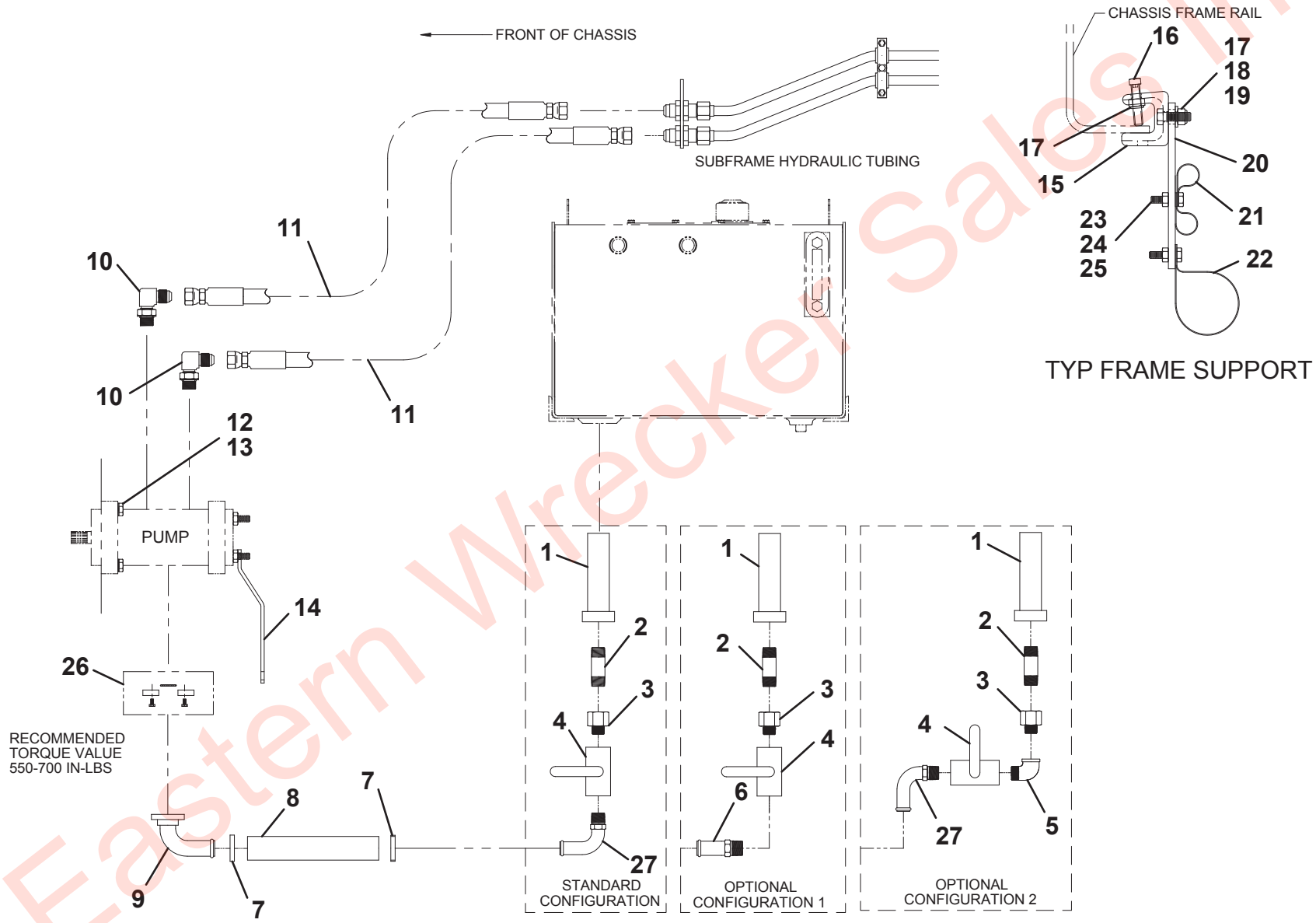

Eastern Wrecker Sales Inc

HYDRAULIC LINES AND FITTINGS - 2 PC BOOM W/O U/L WINCH

ITEM	PART NO.	DESCRIPTION	QTY	REV
	1001207186	Hydraulic Lines and Fittings - 2 Pc Boom W/O U/L Winch	Ref	B
1	7470000004	Gauge	2	
2	7790060676	Screw, #6 X 0.38"	6	
3	7445040421	Fitting	2	
4	1001094694	Reducer	1	
5	2220415	Adapter	1	
6	7445060643	Adapter	8	
7	7443000109	Adapter	2	
8	7274000063	Clamp	2	
9	7445060219	Adapter	1	
10	7430000004	Filter Assembly	2	
11	7443000158	Elbow	2	
12	7470000002	Gauge	2	
13	2220642	Fitting	1	
14	2220878	Fitting	1	
15	7445161622	Fitting	2	
16	7445161620	Fitting	2	
17	7445080822	Fitting	2	
18	7445080837	Fitting	2	
19	7445080843	Fitting	4	
20	7445060645	Fitting	2	
21	4619000006	Manifold	1	
22	7115161650	Capscrew, 0.38"-16NC X 2.00"	2	
23	7950160000	Lockwasher, 0.38" ID	2	
24	7445101032	Fitting	4	
25	7445100843	Fitting	4	
26	1001206909	Hose Kit	1	
27	7445080644	Fitting	2	
28	4819000008	Sleeve	2	
29	7894000004	Tie Strap	20	
30	7950150161	Washer, 0.31" ID	8	
31	7660152601	Locknut, 0.31"-18NC	4	
32	7274000040	Clamp	8	
33	7445080830	Fitting	4	
34	2220700	Fitting	2	
35	2220518	Fitting	2	
101	4567113028	Hose Assembly	1	
102	4567112024	Hose Assembly	1	
103	1001192504	Hose Assembly	4	
104	1001206033	Hose Assembly	1	
105	1001214087	Hose Assembly	1	
106	4570000163	Hose Assembly	2	
107	4570000162	Hose Assembly	2	
108	1001214089	Hose Assembly	1	
109	1001214090	Hose Assembly	1	
110	1001206043	Hose Assembly	1	
111	1001206039	Hose Assembly	1	
112	4567182029	Hose Assembly	1	
113	4567182024	Hose Assembly	1	
114	1001206042	Hose Assembly	2	
115	1001214086	Hose Assembly	2	
116	1001206052	Hose Assembly	2	
117	1001206053	Hose Assembly	2	
118	4567133032	Hose Assembly	1	
119	4567132031	Hose Assembly	1	
120	4567132043	Hose Assembly	4	
121	1001206054	Hose Assembly	2	
122	1001213133	Hose Assembly	2	
123	4569130046	Hose Assembly	6	
124	4569160046	Hose Assembly	4	
125	4567150048	Hose Assembly	4	
126	4569130044	Hose Assembly	2	
127	4570000362	Hose Assembly	2	
128	4570000167	Hose Assembly	2	
129	4567120017	Hose Assembly	2	
130	4570000368	Hose Assembly	2	
131	4567132048	Hose Assembly	2	
201	4570000360	Hose Assembly	2	
201	4570000252	Hose Assembly	2	
301	4567152025	Hose Assembly	1	
302	4567152024	Hose Assembly	1	
303	4567152056	Hose Assembly	1	
304	4567152054	Hose Assembly	1	
401	4567182029	Hose Assembly	1	
402	4567182024	Hose Assembly	1	
403	4567133032	Hose Assembly	1	
404	4567132031	Hose Assembly	1	

Eastern Wrecker Sales Inc

HYDRAULIC LINES AND FITTINGS - 2 PC BOOM W/O U/L WINCH

ITEM	PART NO.	DESCRIPTION	QTY	REV
405	4567132043	Hose Assembly	4	

Eastern Wrecker Sales Inc

HDRAULIC LINES AND FITTINGS - 2 PC BOOM W/O U/L WINCH

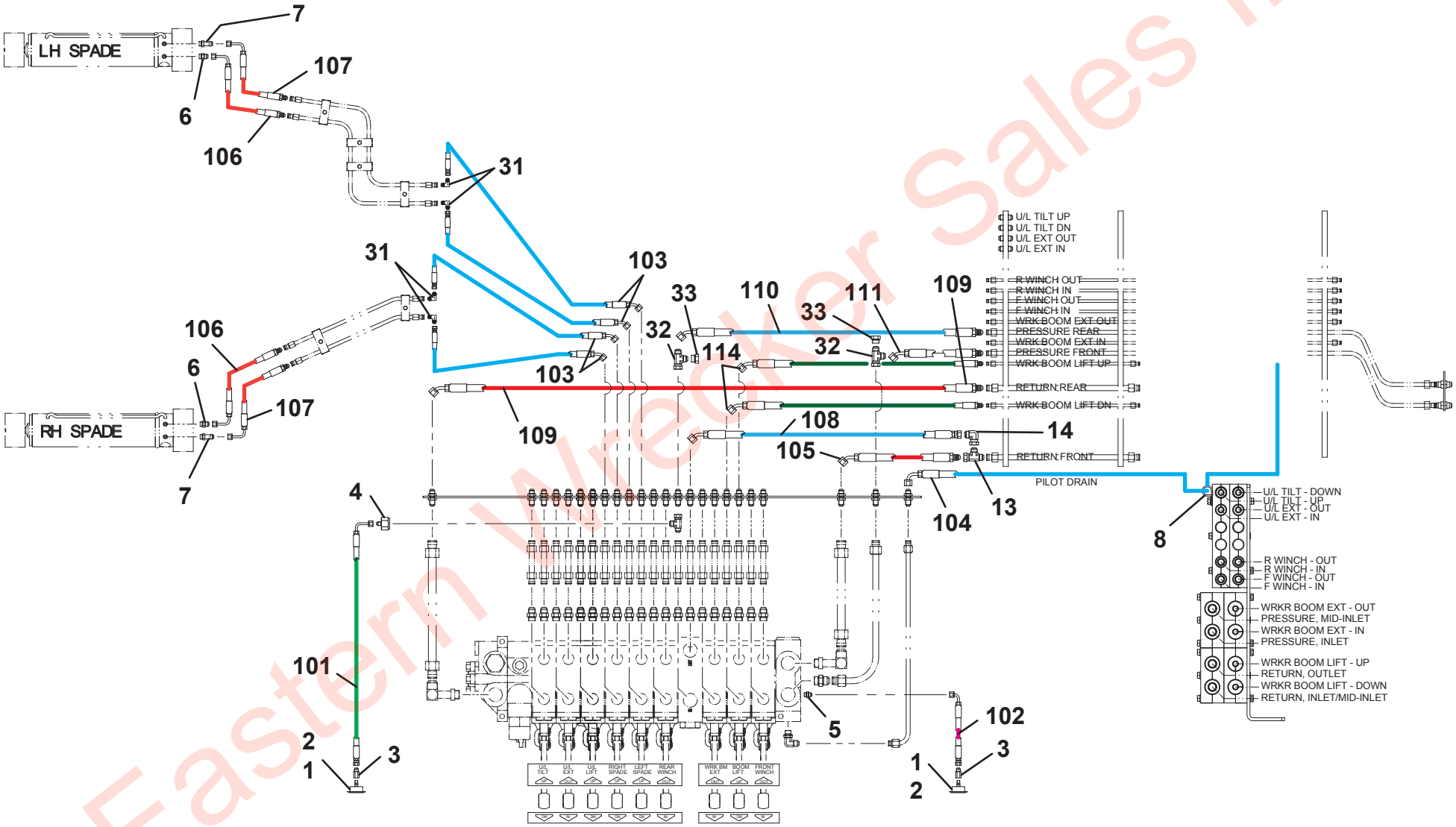

Eastern Wrecker Sales Inc

HDRAULIC LINES AND FITTINGS - 2 PC BOOM W/O U/L WINCH

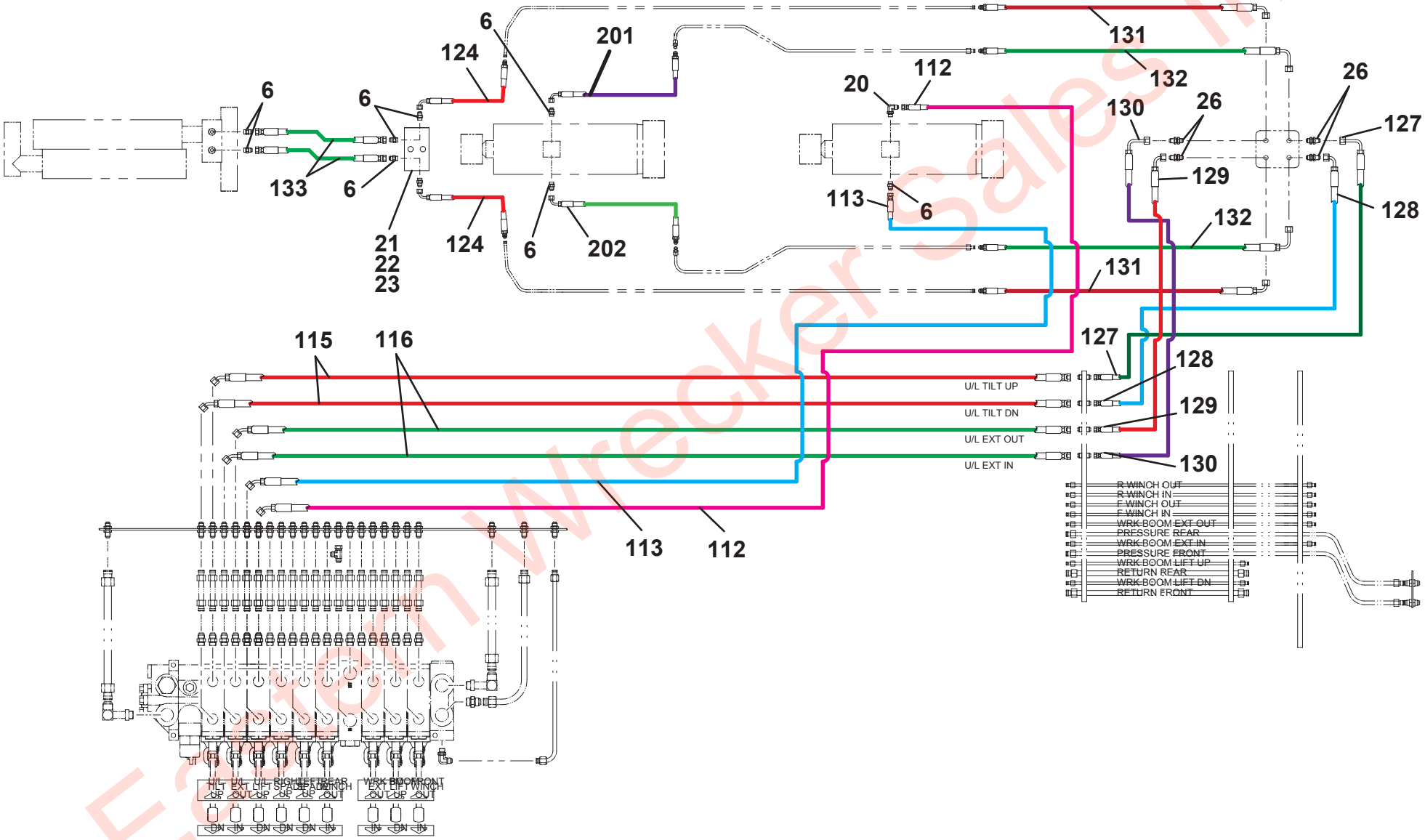

Eastern Wrecker Sales Inc

HDRAULIC LINES AND FITTINGS - 2 PC BOOM W/O U/L WINCH

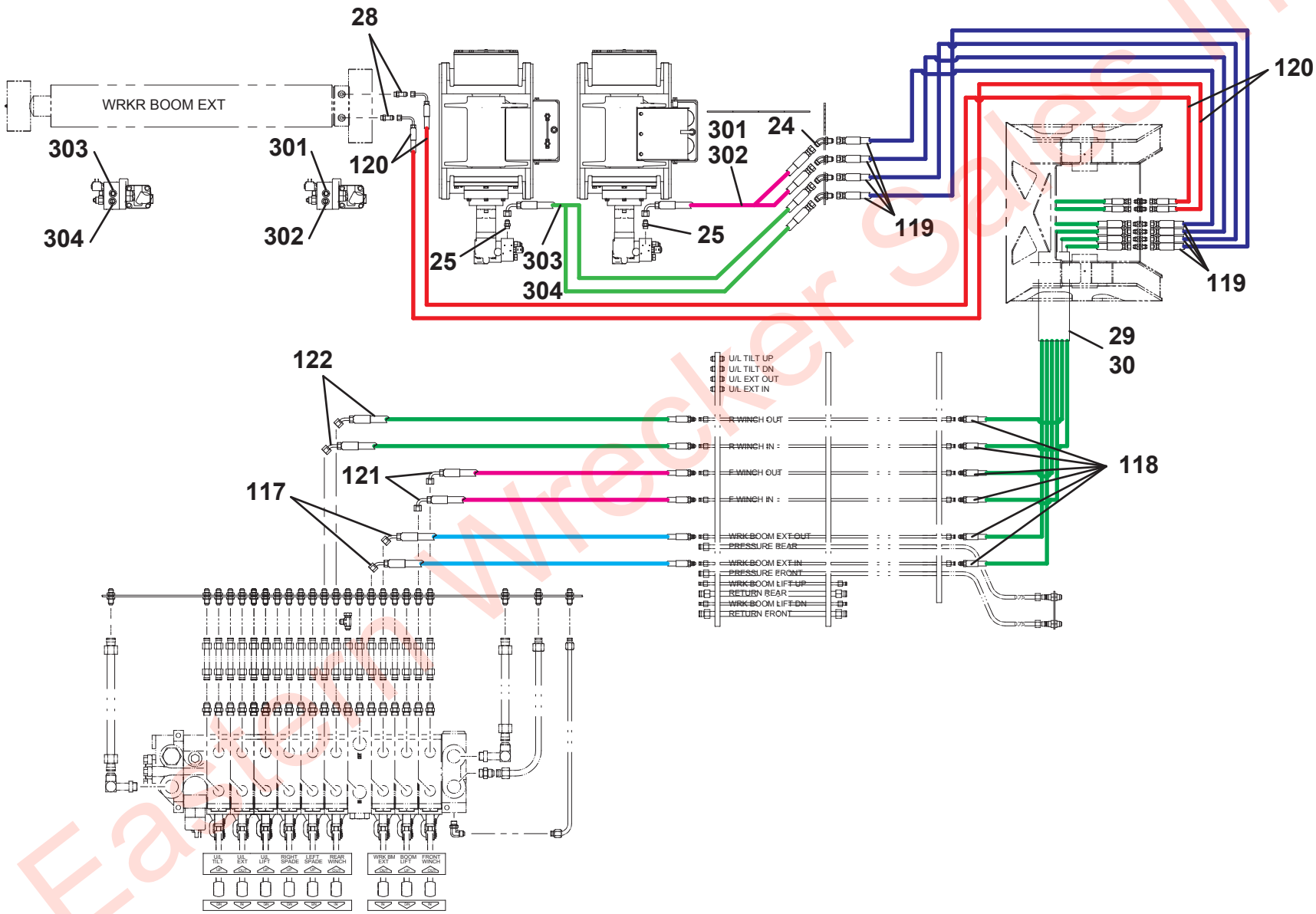

Eastern Wrecker Sales Inc

HDRAULIC LINES AND FITTINGS - 2 PC BOOM W/O U/L WINCH

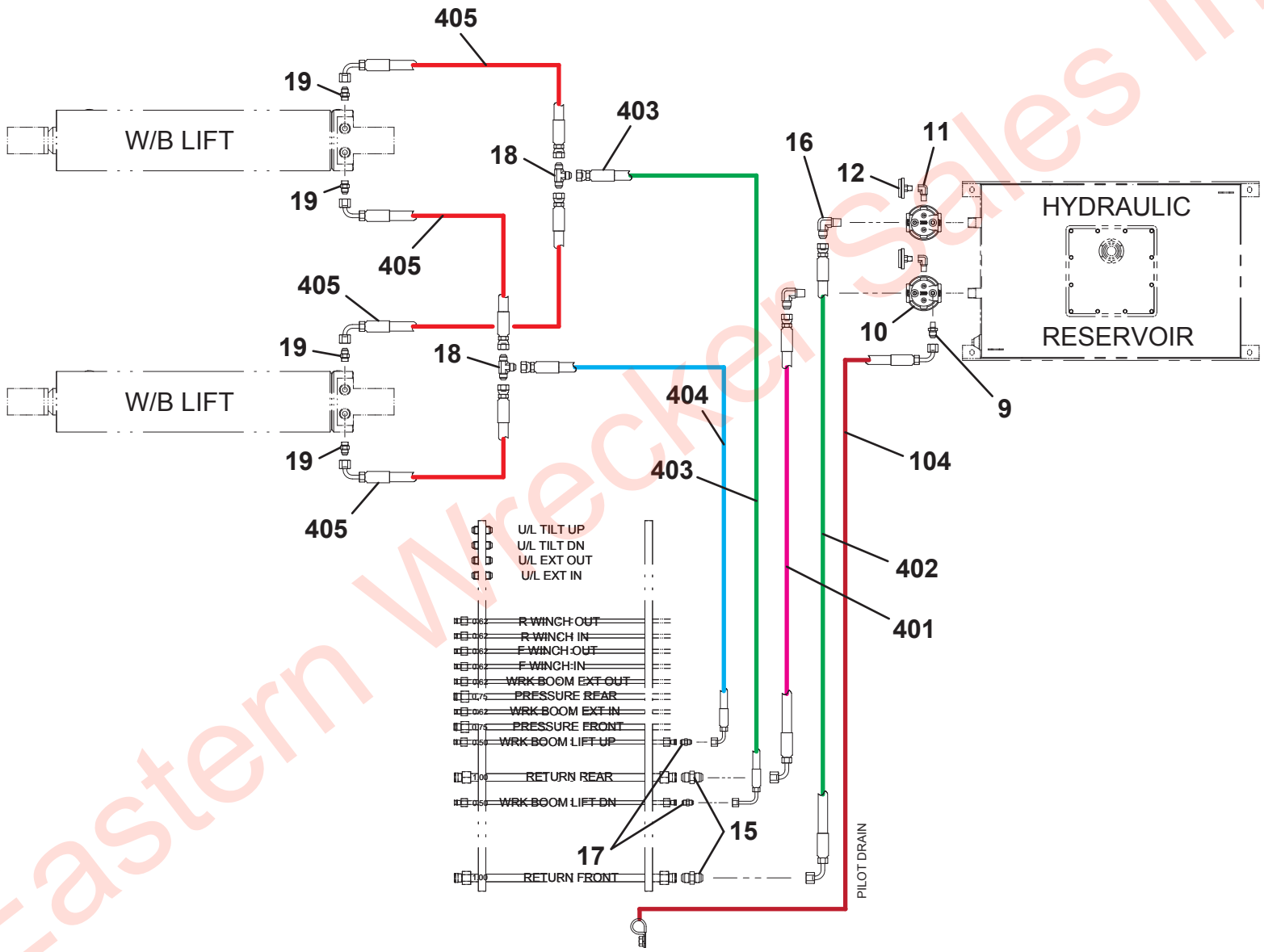

Eastern Wrecker Sales Inc

HYDRAULIC LINES AND FITTINGS - 3 PC BOOM W/O U/L WINCH

ITEM	PART NO.	DESCRIPTION	QTY	REV
	1001207189	Hydraulic Lines and Fittings - 3 Pc Boom W/O U/L Winch	Ref	B
1	7470000004	Gauge	2	
2	7790060676	Screw, #6 X 0.38"	6	
3	7445040421	Fitting	2	
4	1001094694	Reducer	1	
5	2220415	Adapter	1	
6	7445060643	Adapter	8	
7	7443000109	Adapter	2	
8	7274000063	Clamp	2	
9	7445060219	Adapter	1	
10	7430000004	Filter Assembly	2	
11	7443000158	Elbow	2	
12	7470000002	Gauge	2	
13	2220642	Fitting	1	
14	2220878	Fitting	1	
15	7445161622	Fitting	2	
16	7445161620	Fitting	2	
17	7445080822	Fitting	2	
18	7445080837	Fitting	2	
19	7445080843	Fitting	4	
20	7445060645	Fitting	2	
21	4619000006	Manifold	1	
22	7115161650	Capscrew, 0.38"-16NC X 2.00"	2	
23	7950160000	Lockwasher, 0.38" ID	2	
24	7445101032	Fitting	4	
25	7445100843	Fitting	4	
26	1001206909	Hose Kit	1	
27	7445080479	Fitting	2	
28	4819000008	Sleeve	2	
29	7894000004	Tie Strap	20	
30	7950150161	Washer, 0.31" ID	8	
31	7660152601	Locknut, 0.31"-18NC	4	
32	7274000040	Clamp	8	
33	7445080830	Fitting	4	
34	2220700	Fitting	2	
35	2220518	Fitting	2	
101	4567113028	Hose Assembly	1	
102	4567112024	Hose Assembly	1	
103	1001192504	Hose Assembly	4	
104	1001206033	Hose Assembly	1	
105	1001214087	Hose Assembly	1	
106	4570000163	Hose Assembly	2	
107	4570000162	Hose Assembly	2	
108	1001214089	Hose Assembly	1	
109	1001214090	Hose Assembly	1	
110	1001206043	Hose Assembly	1	
111	1001206039	Hose Assembly	1	
112	4567182029	Hose Assembly	1	
113	4567182024	Hose Assembly	1	
114	1001206042	Hose Assembly	2	
115	1001214086	Hose Assembly	2	
116	1001206052	Hose Assembly	2	
117	1001206053	Hose Assembly	2	
118	4567133032	Hose Assembly	1	
119	4567132031	Hose Assembly	1	
120	4567132043	Hose Assembly	4	
121	1001206054	Hose Assembly	2	
122	1001213133	Hose Assembly	2	
123	4569130046	Hose Assembly	6	
124	4569160046	Hose Assembly	4	
125	4567150048	Hose Assembly	4	
126	4569130044	Hose Assembly	2	
127	4570000362	Hose Assembly	2	
128	4570000167	Hose Assembly	2	
129	4567120017	Hose Assembly	2	
130	4570000368	Hose Assembly	2	
131	4567132048	Hose Assembly	2	
201	4570000360	Hose Assembly	2	
201	4570000252	Hose Assembly	2	
301	4567152025	Hose Assembly	1	
302	4567152024	Hose Assembly	1	
303	4567152056	Hose Assembly	1	
304	4567152054	Hose Assembly	1	
401	4567182029	Hose Assembly	1	
402	4567182024	Hose Assembly	1	
403	4567133032	Hose Assembly	1	
404	4567132031	Hose Assembly	1	

Eastern Wrecker Sales Inc

HYDRAULIC LINES AND FITTINGS - 3 PC BOOM W/O U/L WINCH

ITEM	PART NO.	DESCRIPTION	QTY	REV
405	4567132043	Hose Assembly	4	

Eastern Wrecker Sales Inc

HDRAULIC LINES AND FITTINGS - 3 PC BOOM W/O U/L WINCH

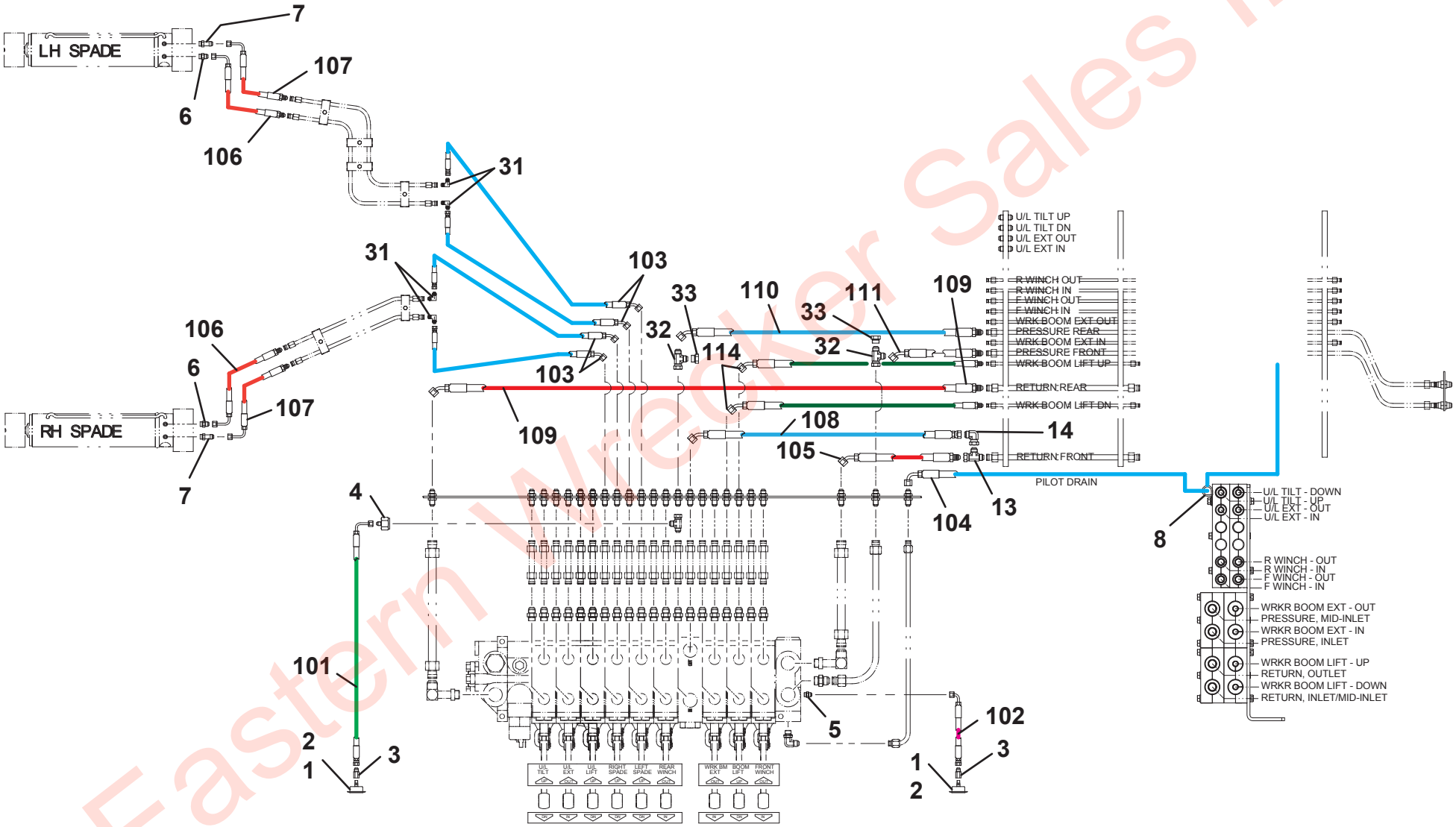

Eastern Wrecker Sales Inc

HDRAULIC LINES AND FITTINGS - 3 PC BOOM W/O U/L WINCH

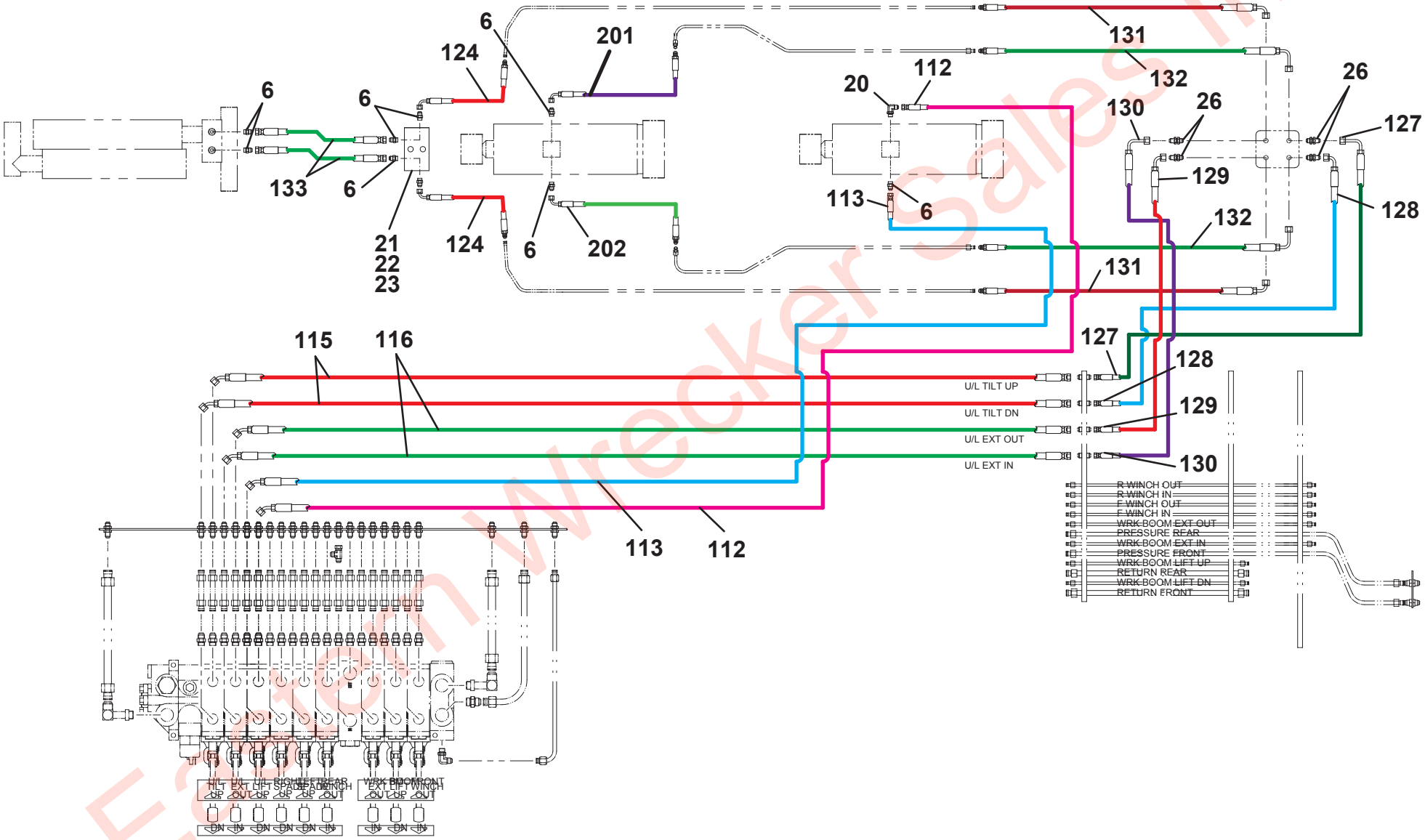

Eastern Wrecker Sales Inc

HDRAULIC LINES AND FITTINGS - 3 PC BOOM W/O U/L WINCH

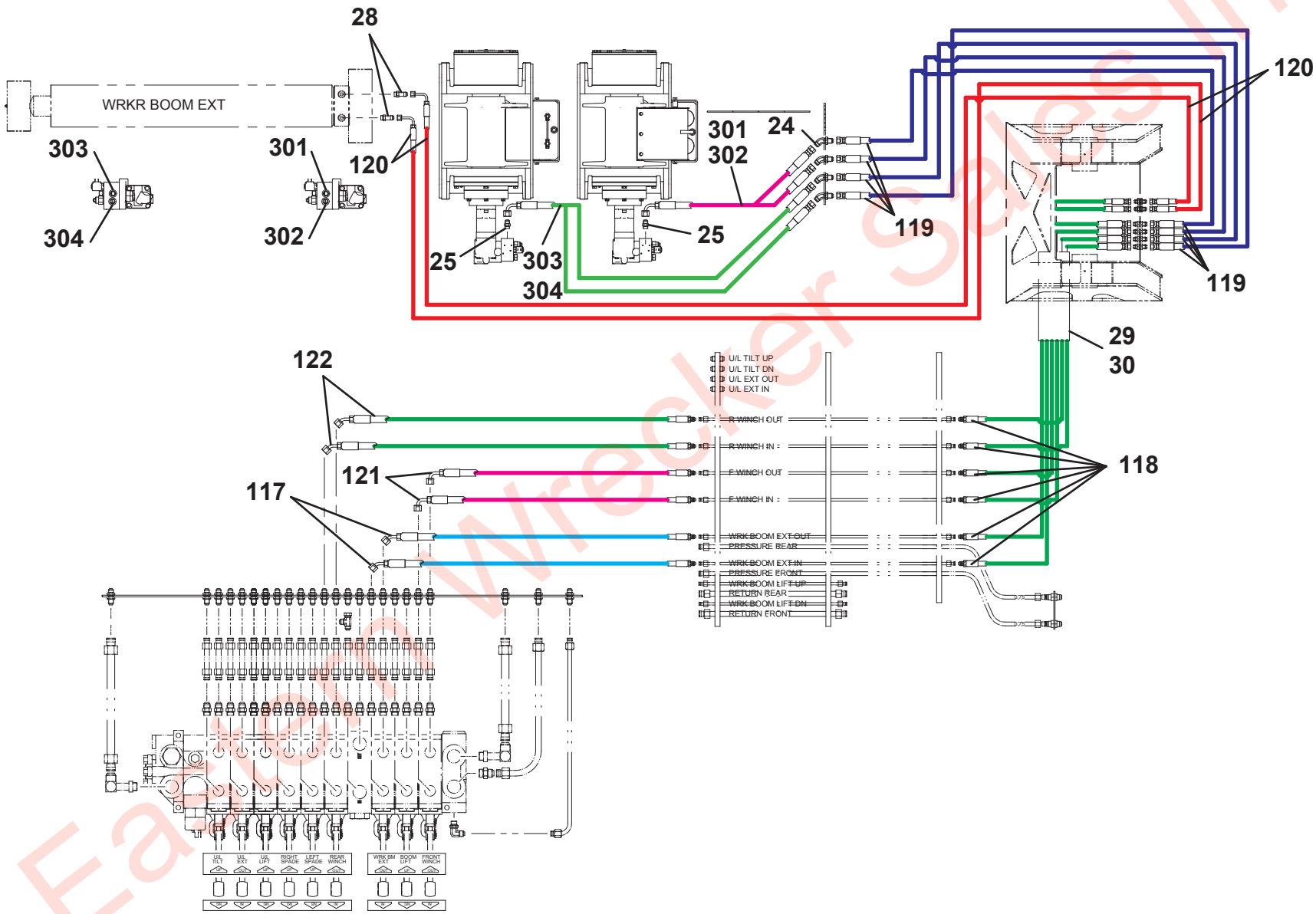

Eastern Wrecker Sales Inc

HDRAULIC LINES AND FITTINGS - 3 PC BOOM W/O U/L WINCH

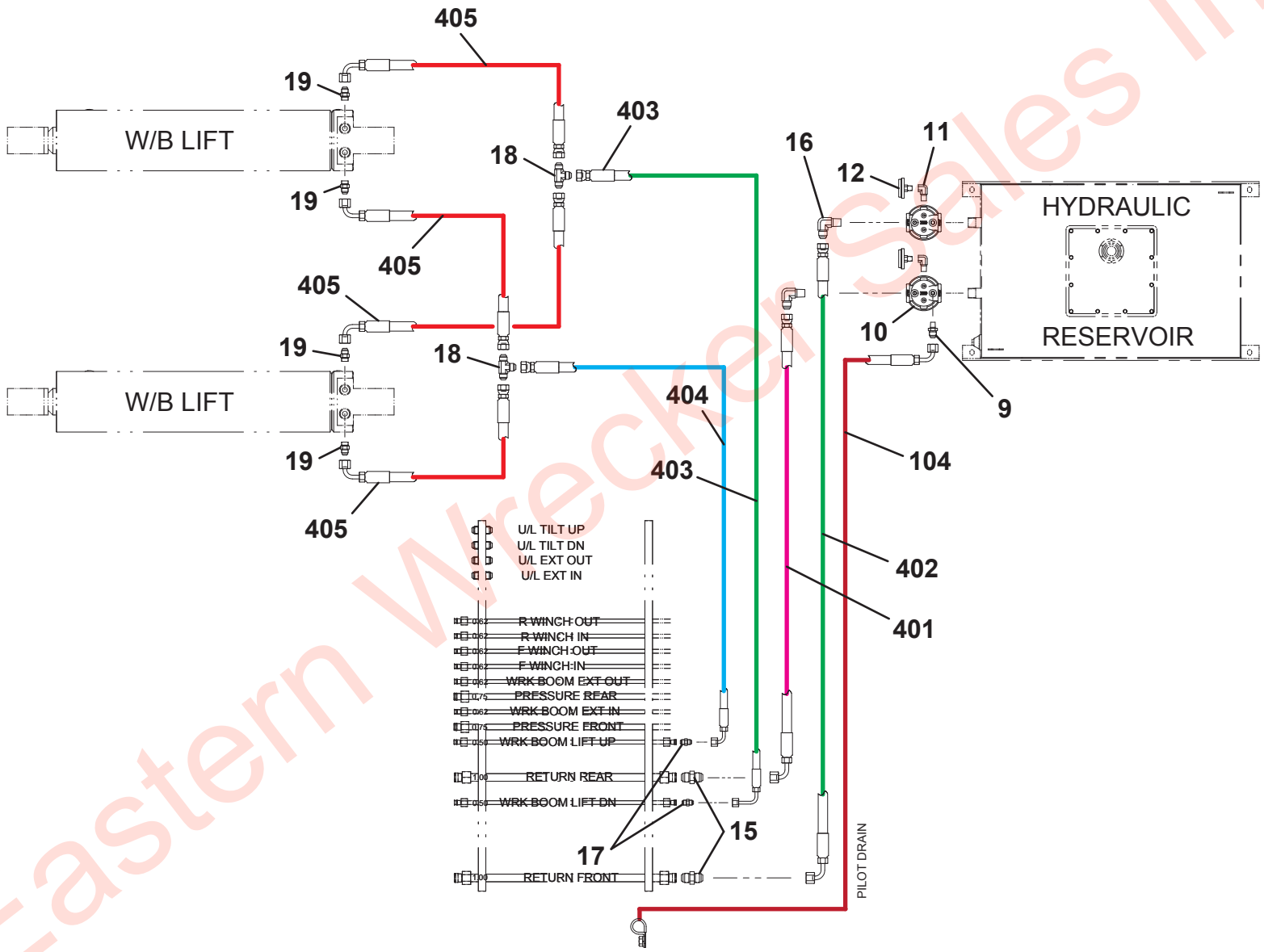

Eastern Wrecker Sales Inc

HYDRAULIC LINES AND FITTINGS - 2 PC BOOM W/ U/L WINCH

ITEM	PART NO.	DESCRIPTION	QTY	REV
	1001207188	Hydraulic Lines and Fittings - 2 Pc Boom W/ U/L Winch	Ref	B
1	7470000004	Gauge	2	
2	7790060676	Screw, #6 X 0.38"	6	
3	7445040421	Fitting	2	
4	1001094694	Reducer	1	
5	2220415	Adapter	1	
6	7445060643	Adapter	8	
7	7443000109	Adapter	2	
8	7274000063	Clamp	2	
9	7445060219	Adapter	1	
10	7430000004	Filter Assembly	2	
11	7443000158	Elbow	2	
12	7470000002	Gauge	2	
13	2220642	Fitting	1	
14	2220878	Fitting	1	
15	7445161622	Fitting	2	
16	7445161620	Fitting	2	
17	7445080822	Fitting	2	
18	7445080837	Fitting	2	
19	7445080843	Fitting	4	
20	7445060645	Fitting	2	
21	4619000006	Manifold	1	
22	7115161650	Capscrew, 0.38"-16NC X 2.00"	2	
23	7950160000	Lockwasher, 0.38" ID	2	
24	7445101032	Fitting	4	
25	7445100843	Fitting	4	
26	1001206909	Hose Kit	1	
27	7445080644	Fitting	2	
28	4819000008	Sleeve	2	
29	7894000004	Tie Strap	20	
30	7950150161	Washer, 0.31" ID	8	
31	7660152601	Locknut, 0.31"-18NC	4	
32	7274000040	Clamp	8	
33	7445080830	Fitting	4	
34	2220700	Fitting	2	
35	2220518	Fitting	2	
101	4567113028	Hose Assembly	1	
102	4567112024	Hose Assembly	1	
103	1001192504	Hose Assembly	4	
104	1001206033	Hose Assembly	1	
105	1001214087	Hose Assembly	1	
106	4570000163	Hose Assembly	2	
107	4570000162	Hose Assembly	2	
108	1001214089	Hose Assembly	1	
109	1001214090	Hose Assembly	1	
110	1001206043	Hose Assembly	1	
111	1001206039	Hose Assembly	1	
112	4567182029	Hose Assembly	1	
113	4567182024	Hose Assembly	1	
114	1001206042	Hose Assembly	2	
115	1001214086	Hose Assembly	2	
116	1001206052	Hose Assembly	2	
117	1001206053	Hose Assembly	2	
118	4567133032	Hose Assembly	1	
119	4567132031	Hose Assembly	1	
120	4567132043	Hose Assembly	4	
121	1001206054	Hose Assembly	2	
122	1001213133	Hose Assembly	2	
123	4569130046	Hose Assembly	6	
124	4569160046	Hose Assembly	4	
125	4567150048	Hose Assembly	4	
126	4569130044	Hose Assembly	2	
127	4570000362	Hose Assembly	2	
128	4570000167	Hose Assembly	2	
129	4567120017	Hose Assembly	2	
130	4570000368	Hose Assembly	2	
131	4567132048	Hose Assembly	2	
201	4570000360	Hose Assembly	2	
201	4570000252	Hose Assembly	2	
301	4567152025	Hose Assembly	1	
302	4567152024	Hose Assembly	1	
303	4567152056	Hose Assembly	1	
304	4567152054	Hose Assembly	1	
401	4569180038	Hose Assembly	1	
402	4569180044	Hose Assembly	1	
403	4567133032	Hose Assembly	1	
404	4567132031	Hose Assembly	1	

Eastern Wrecker Sales Inc

HYDRAULIC LINES AND FITTINGS - 2 PC BOOM W/ U/L WINCH

ITEM	PART NO.	DESCRIPTION	QTY	REV
405	4567132034	Hose Assembly	4	
406	1001213132	Hose Assembly	2	
407	4569163036	Hose Assembly	1	
408	4569162034	Hose Assembly	1	

Eastern Wrecker Sales Inc

HDRAULIC LINES AND FITTINGS - 2 PC BOOM W/ U/L WINCH

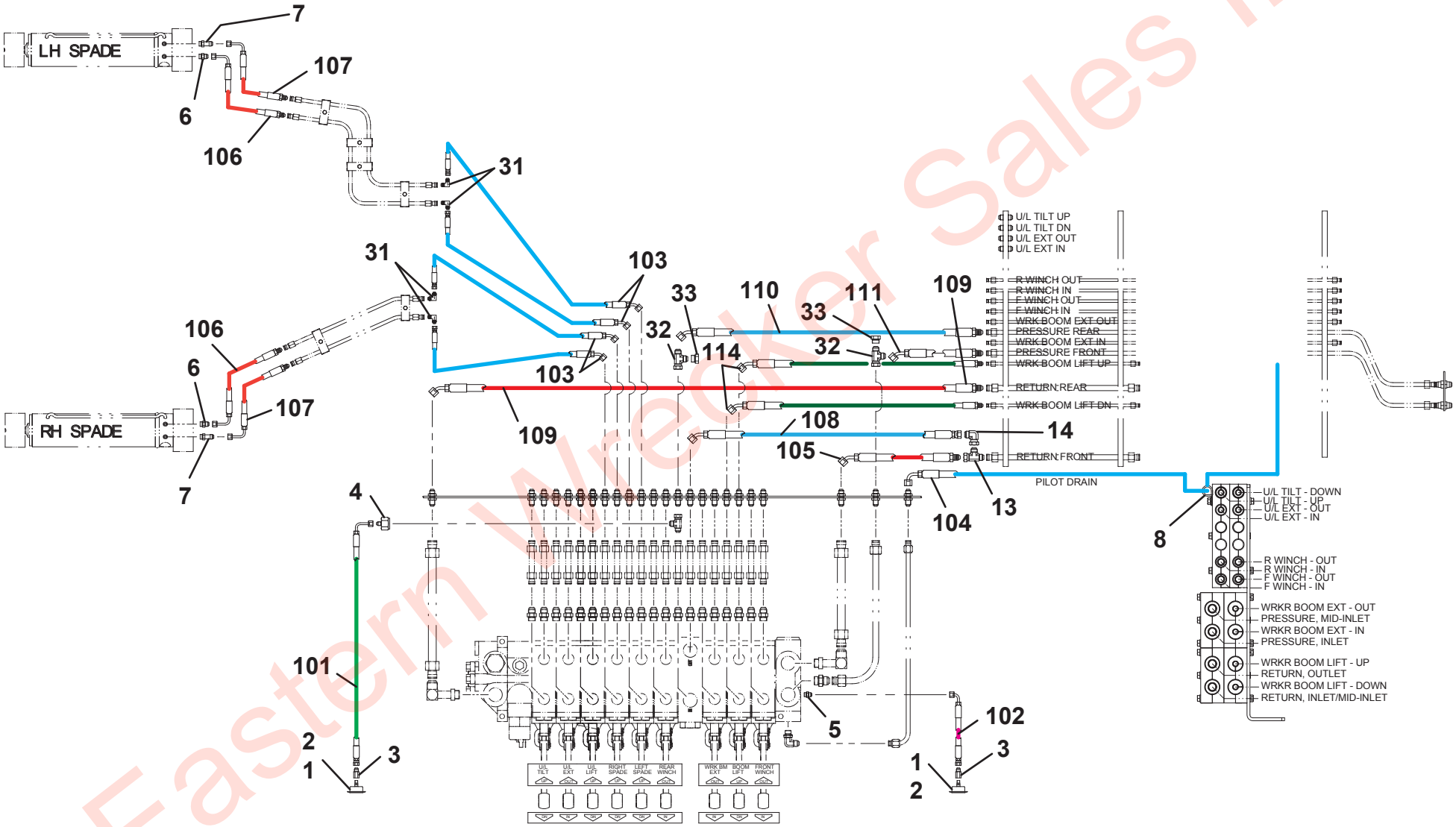

Eastern Wrecker Sales Inc

HDRAULIC LINES AND FITTINGS - 2 PC BOOM W/ U/L WINCH

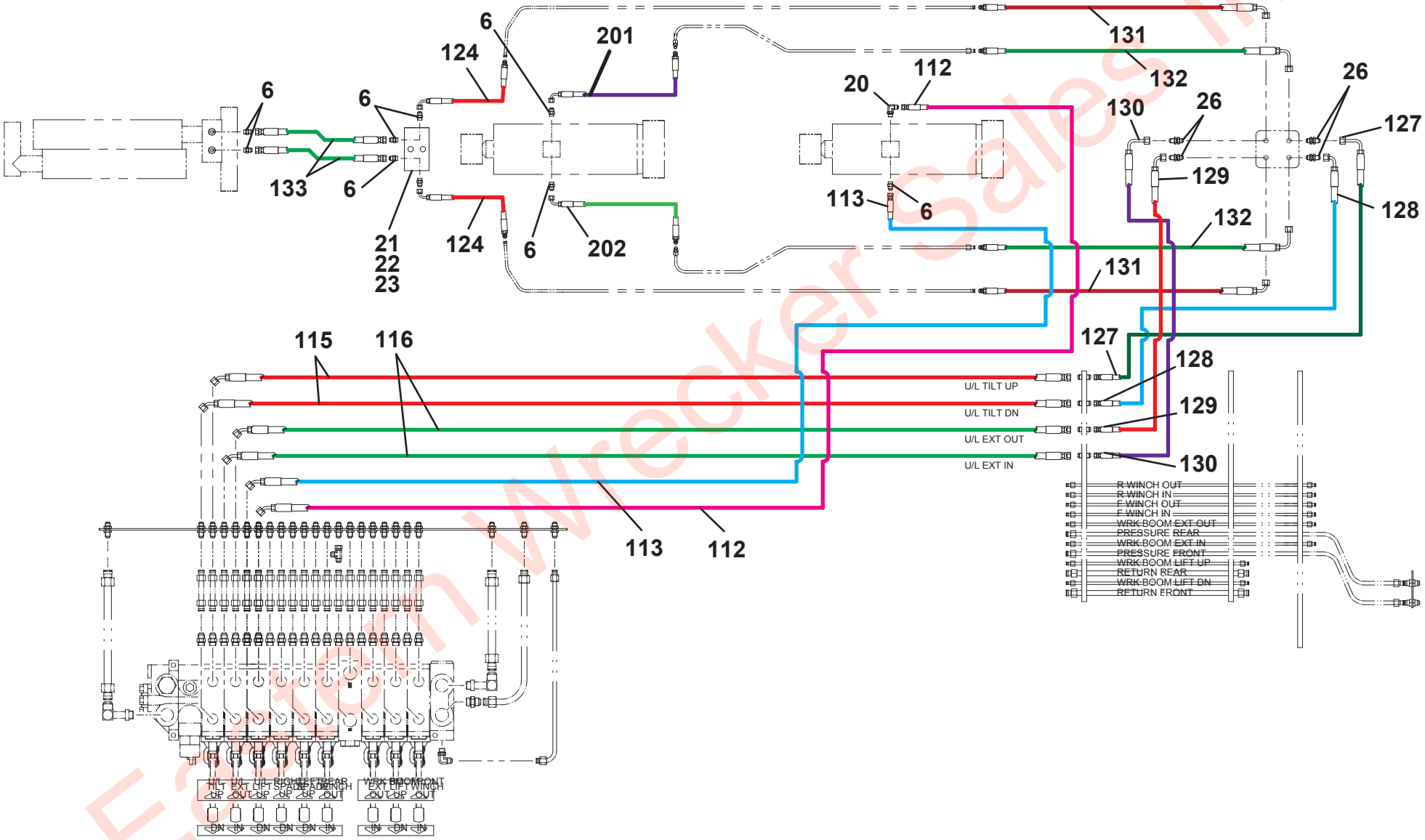

Eastern Wrecker Sales Inc

HDRAULIC LINES AND FITTINGS - 2 PC BOOM W/ U/L WINCH

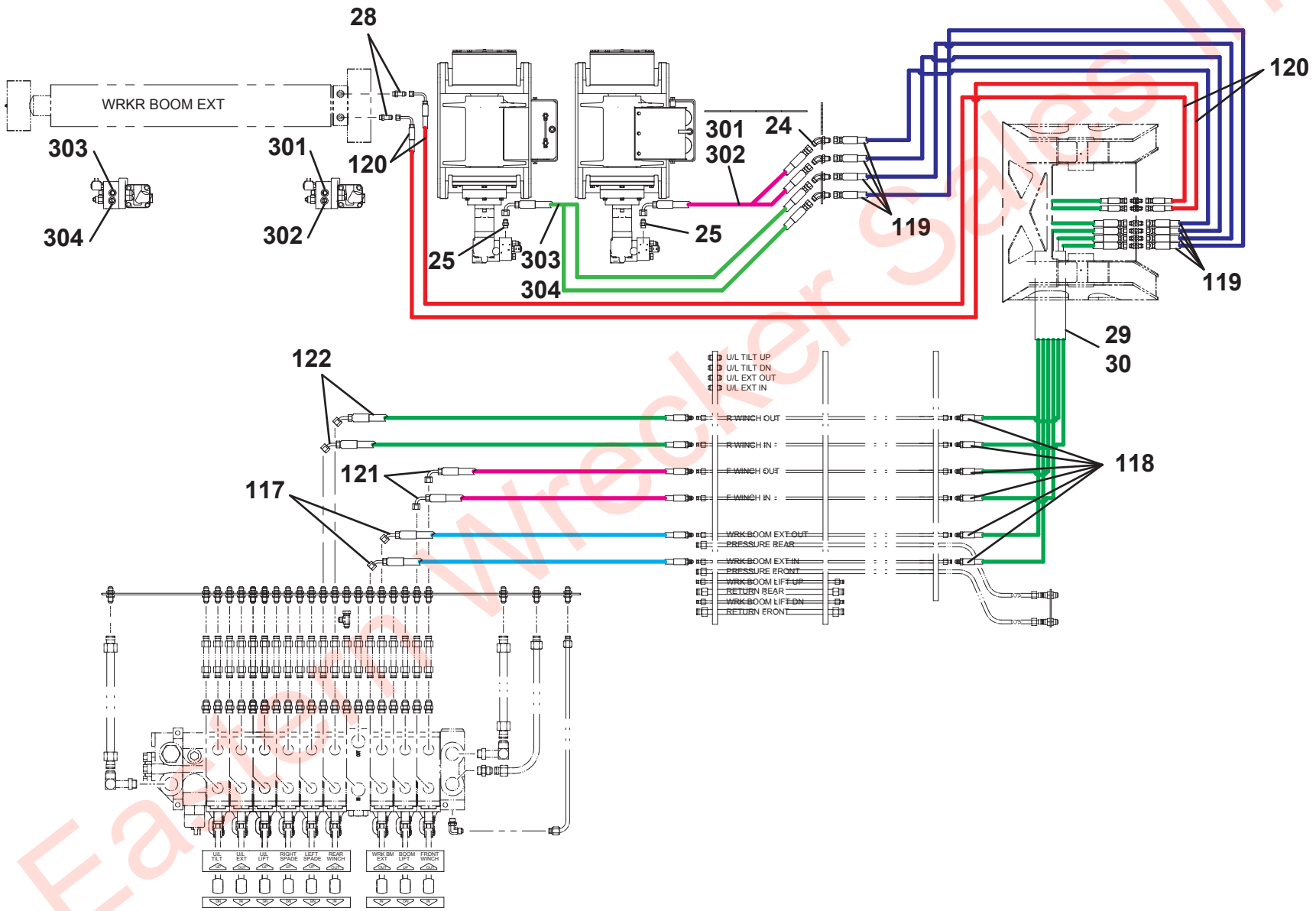

Eastern Wrecker Sales Inc

HDRAULIC LINES AND FITTINGS - 2 PC BOOM W/ U/L WINCH

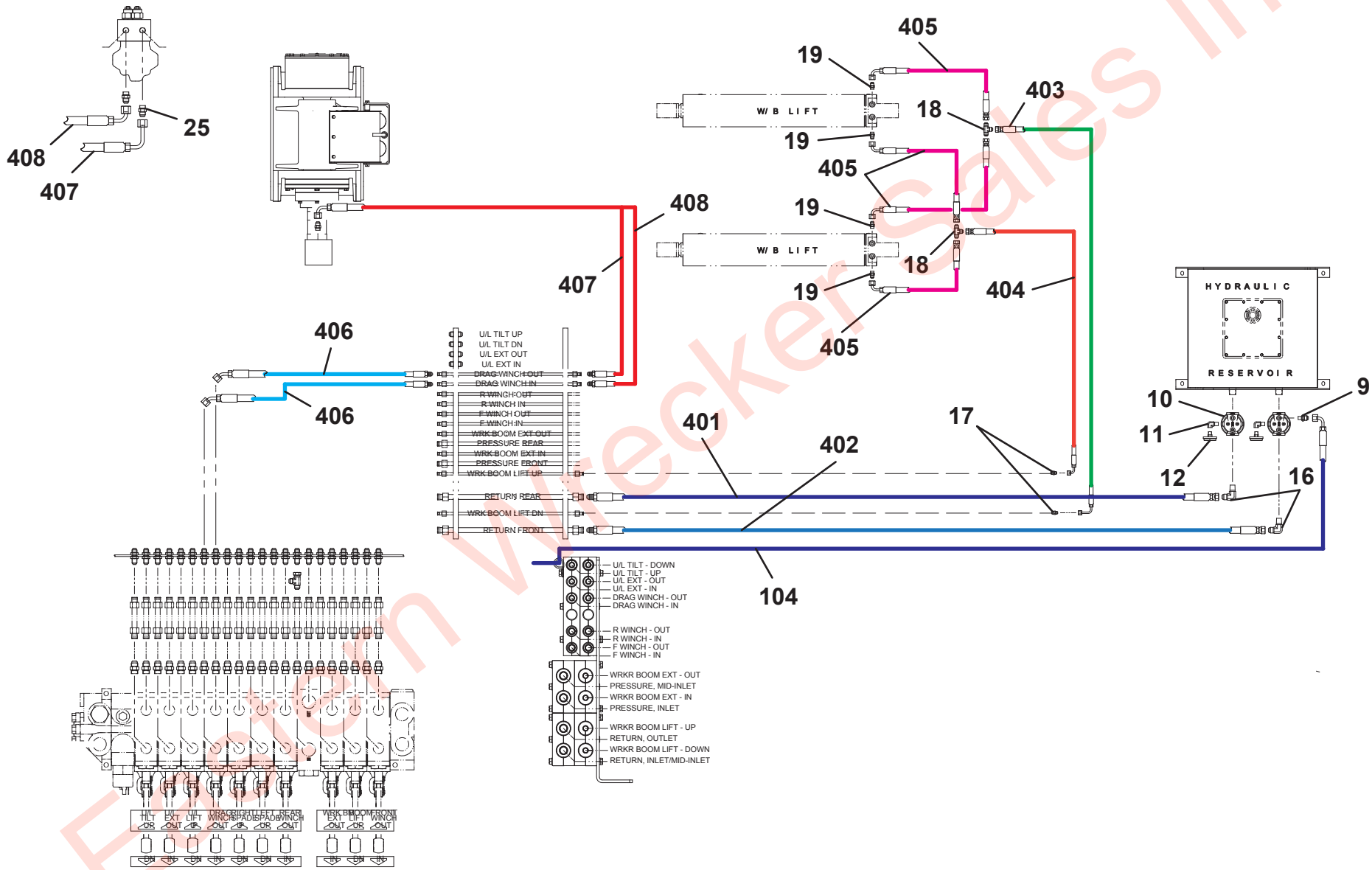

Eastern Wrecker Sales Inc

HYDRAULIC LINES AND FITTINGS - 3 PC BOOM W/ U/L WINCH

ITEM	PART NO.	DESCRIPTION	QTY	REV
	1001207191	Hydraulic Lines and Fittings - 3 Pc Boom W/ U/L Winch	Ref	B
1	7470000004	Gauge	2	
2	7790060676	Screw, #6 X 0.38"	6	
3	7445040421	Fitting	2	
4	1001094694	Reducer	1	
5	2220415	Adapter	1	
6	7445060643	Adapter	8	
7	7443000109	Adapter	2	
8	7274000063	Clamp	2	
9	7445060219	Adapter	1	
10	7430000004	Filter Assembly	2	
11	7443000158	Elbow	2	
12	7470000002	Gauge	2	
13	2220642	Fitting	1	
14	2220878	Fitting	1	
15	7445161622	Fitting	2	
16	7445161620	Fitting	2	
17	7445080822	Fitting	2	
18	7445080837	Fitting	2	
19	7445080843	Fitting	4	
20	7445060645	Fitting	2	
21	4619000006	Manifold	1	
22	7115161650	Capscrew, 0.38"-16NC X 2.00"	2	
23	7950160000	Lockwasher, 0.38" ID	2	
24	7445101032	Fitting	4	
25	7445100843	Fitting	4	
26	1001206909	Hose Kit	1	
27	7445080479	Fitting	2	
28	4819000008	Sleeve	2	
29	7894000004	Tie Strap	20	
30	7950150161	Washer, 0.31" ID	8	
31	7660152601	Locknut, 0.31"-18NC	4	
32	7274000040	Clamp	8	
33	7445080830	Fitting	4	
34	2220700	Fitting	2	
35	2220518	Fitting	2	
101	4567113028	Hose Assembly	1	
102	4567112024	Hose Assembly	1	
103	1001192504	Hose Assembly	4	
104	1001206033	Hose Assembly	1	
105	1001214087	Hose Assembly	1	
106	4570000163	Hose Assembly	2	
107	4570000162	Hose Assembly	2	
108	1001214089	Hose Assembly	1	
109	1001214090	Hose Assembly	1	
110	1001206043	Hose Assembly	1	
111	1001206039	Hose Assembly	1	
112	4567182029	Hose Assembly	1	
113	4567182024	Hose Assembly	1	
114	1001206042	Hose Assembly	2	
115	1001214086	Hose Assembly	2	
116	1001206052	Hose Assembly	2	
117	1001206053	Hose Assembly	2	
118	4567133032	Hose Assembly	1	
119	4567132031	Hose Assembly	1	
120	4567132043	Hose Assembly	4	
121	1001206054	Hose Assembly	2	
122	1001213133	Hose Assembly	2	
123	4569130046	Hose Assembly	6	
124	4569160046	Hose Assembly	4	
125	4567150048	Hose Assembly	4	
126	4569130044	Hose Assembly	2	
127	4570000362	Hose Assembly	2	
128	4570000167	Hose Assembly	2	
129	4567120017	Hose Assembly	2	
130	4570000368	Hose Assembly	2	
131	4567132048	Hose Assembly	2	
201	4570000360	Hose Assembly	2	
201	4570000252	Hose Assembly	2	
301	4567152025	Hose Assembly	1	
302	4567152024	Hose Assembly	1	
303	4567152056	Hose Assembly	1	
304	4567152054	Hose Assembly	1	
401	4569180038	Hose Assembly	1	
402	4569180044	Hose Assembly	1	
403	4567133032	Hose Assembly	1	
404	4567132031	Hose Assembly	1	

Eastern Wrecker Sales Inc

HYDRAULIC LINES AND FITTINGS - 3 PC BOOM W/ U/L WINCH

ITEM	PART NO.	DESCRIPTION	QTY	REV
405	4567132034	Hose Assembly	4	
406	1001213132	Hose Assembly	2	
407	4569163036	Hose Assembly	1	
408	4569162034	Hose Assembly	1	

Eastern Wrecker Sales Inc

HDRAULIC LINES AND FITTINGS - 3 PC BOOM W/ U/L WINCH

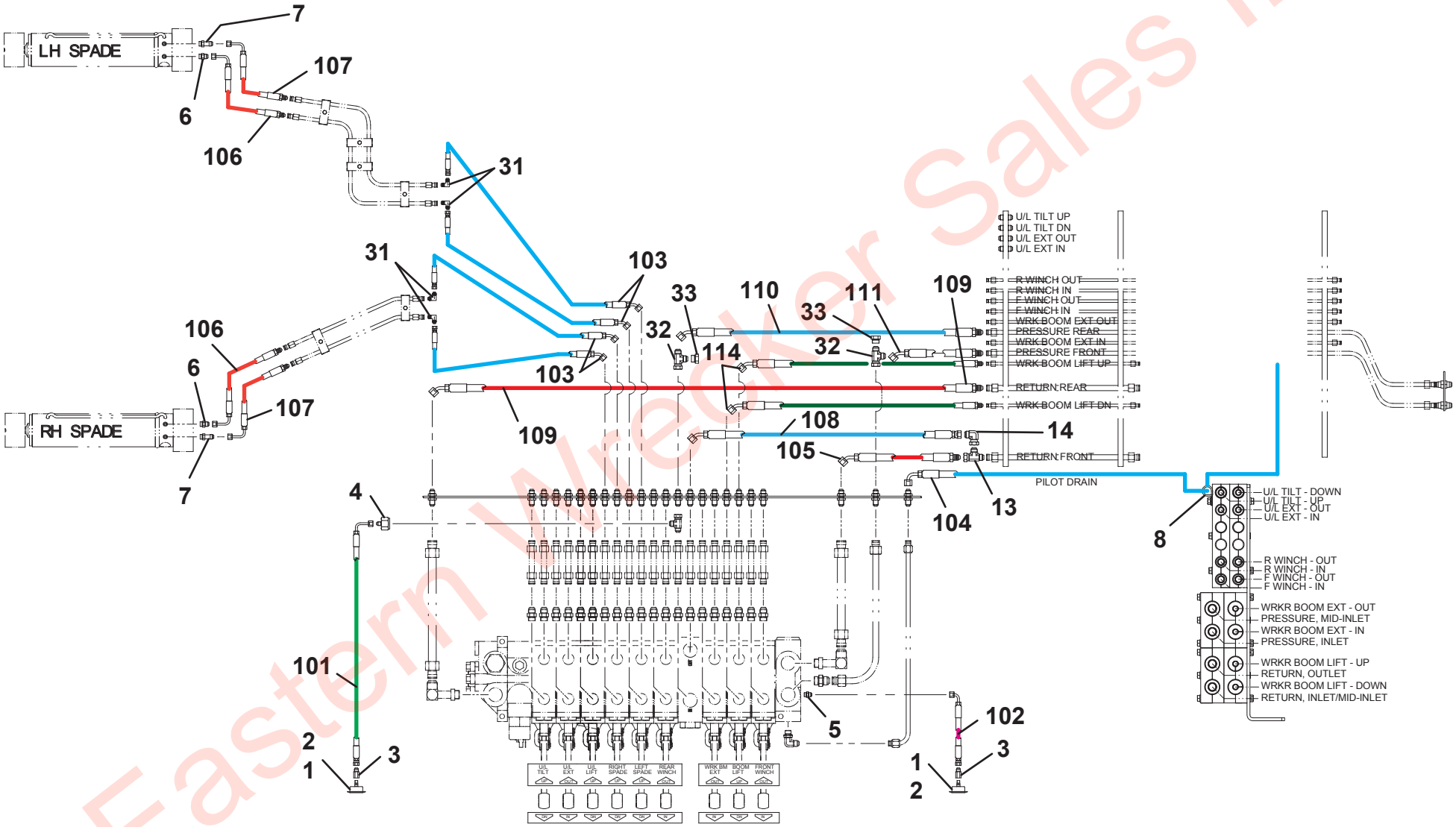

Eastern Wrecker Sales Inc

HDRAULIC LINES AND FITTINGS - 3 PC BOOM W/ U/L WINCH

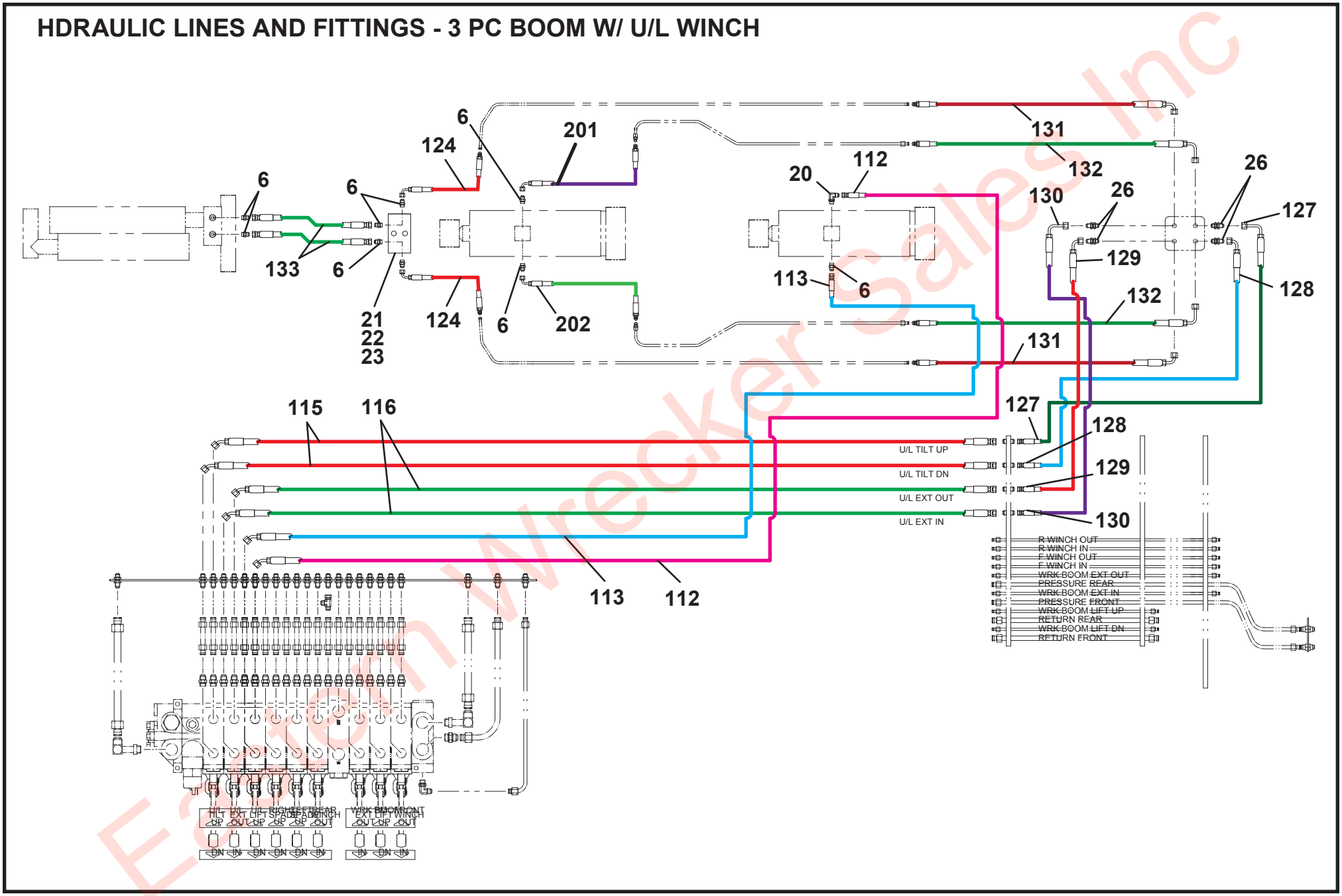

Eastern Wrecker Sales Inc

HDRAULIC LINES AND FITTINGS - 3 PC BOOM W/ U/L WINCH

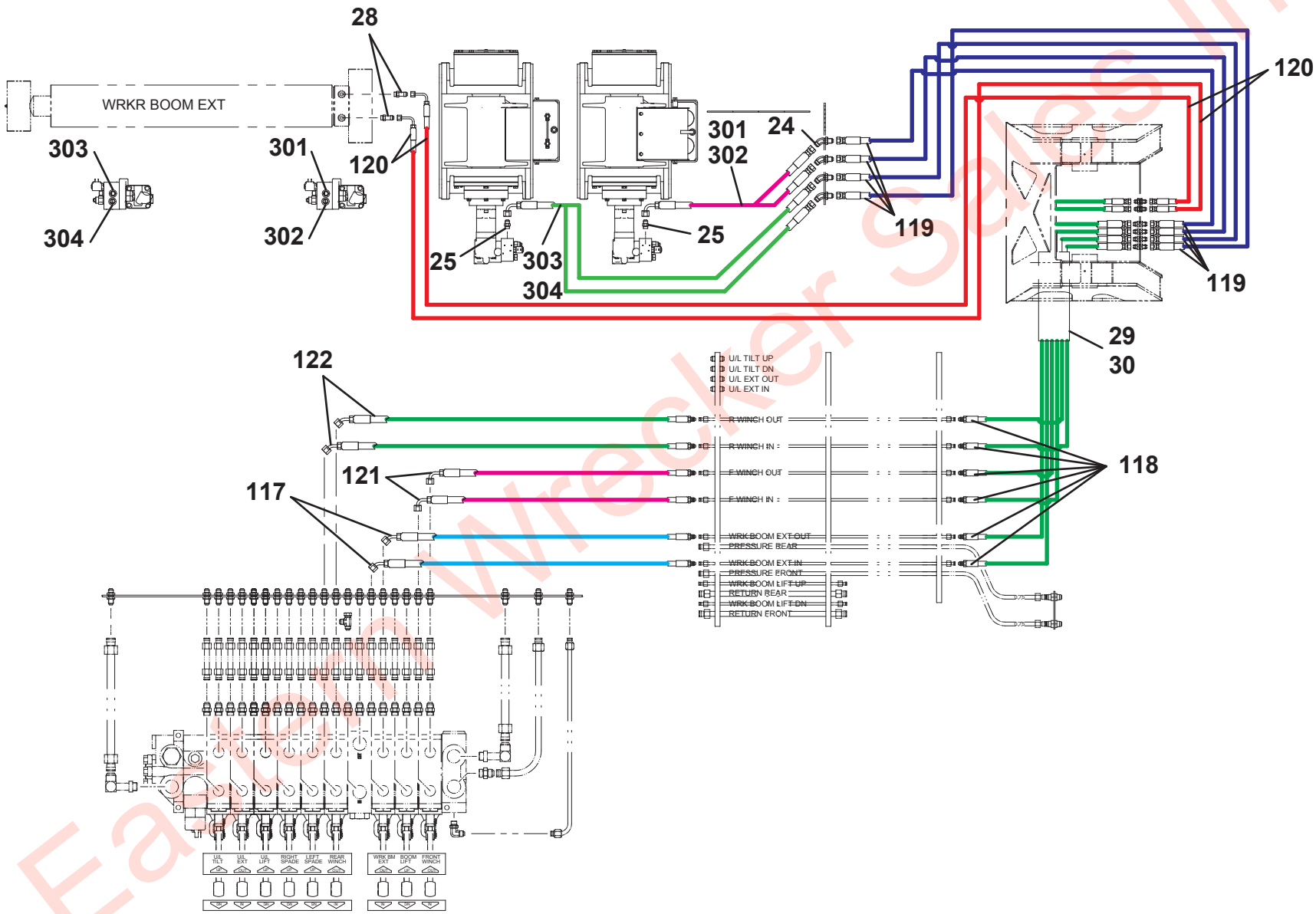

Eastern Wrecker Sales Inc

HDRAULIC LINES AND FITTINGS - 3 PC BOOM W/ U/L WINCH

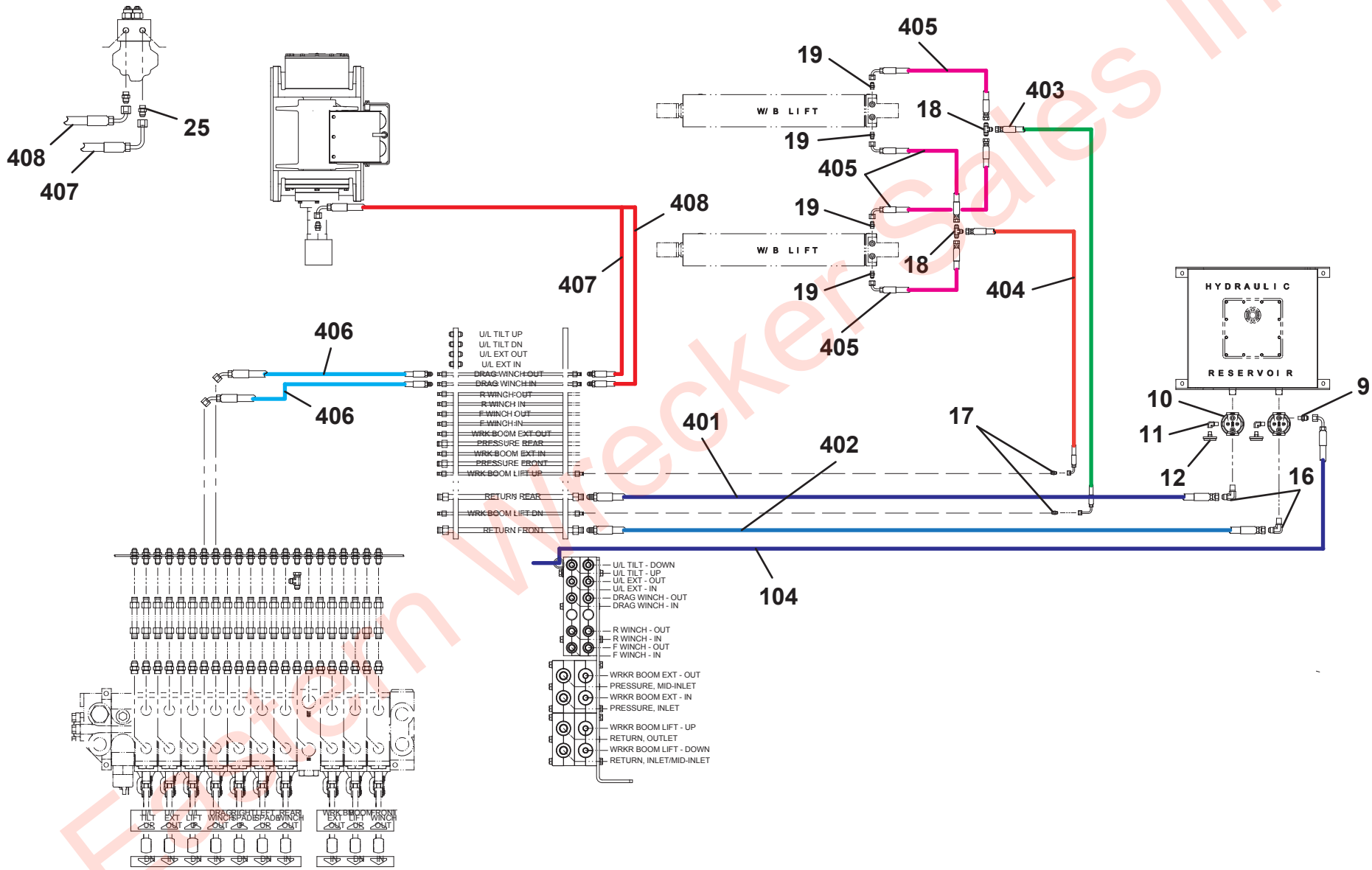

Eastern Wrecker Sales Inc

DRIVER SIDE GAUGE INSTALLATION

ITEM	PART NO.	DESCRIPTION	QTY	REV
	1001220219	Driver Side Gauge Installation	Ref	A
1	7470000004	Gauge Mount	2	
2	7790060676	Screw, #6 x 0.38”	6	
3	7445040421	Fitting	2	
4	1001094694	Reducer	2	
5	2230021	Adapter	2	
6	2220654	Adapter	2	
7	1001193233	Hose Assembly	2	
8	1001193241	Hose Assembly	1	
9	1001193242	Hose Assembly	1	

Eastern Wrecker Sales Inc

DRIVER SIDE GAUGE INSTALLATION

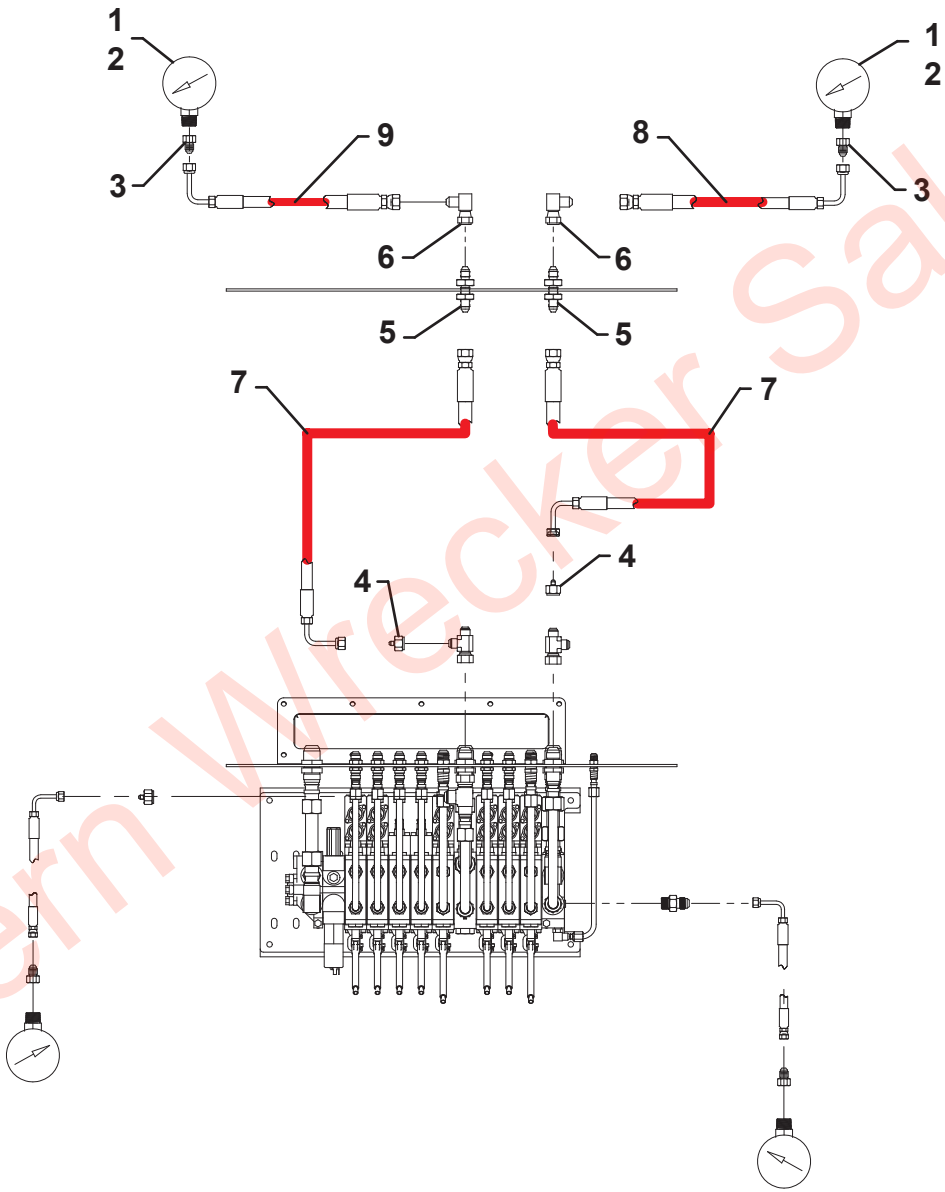

Eastern Wrecker Sales Inc

THIS PAGE INTENTIONALLY LEFT BLANK

Eastern Wrecker Sales Inc

SECTION 7 - ELECTRICAL

Eastern Wrecker Sales Inc

LIGHT BAR INSTALLATION

ITEM	PART NO.	DESCRIPTION	QTY	REV
	1001214376	Light Bar Installation	Ref	A
1	1001136990	Light Bar, 58” Amber CD3 (See Separate Breakdown in this Section)	1	
	1001199475	Light Bar, 60” Whelen (See Separate Breakdown in this Section)	1	
	1001152815	Light Bar, 58” Red CD3 (See Separate Breakdown in this Section)	1	
2	4178000234	Bracket	2	
3	1001214128	Plate	4	
4	0641610	Capscrew, 0.38” - 16NC x 1.25”	8	
5	4751600	Washer, 0.38” ID	16	
6	7660162601	Locknut, 0.38” - 16NC	8	
7	7493000011	Grommet	1	

Eastern Wrecker Sales Inc

LIGHT BAR INSTALLATION

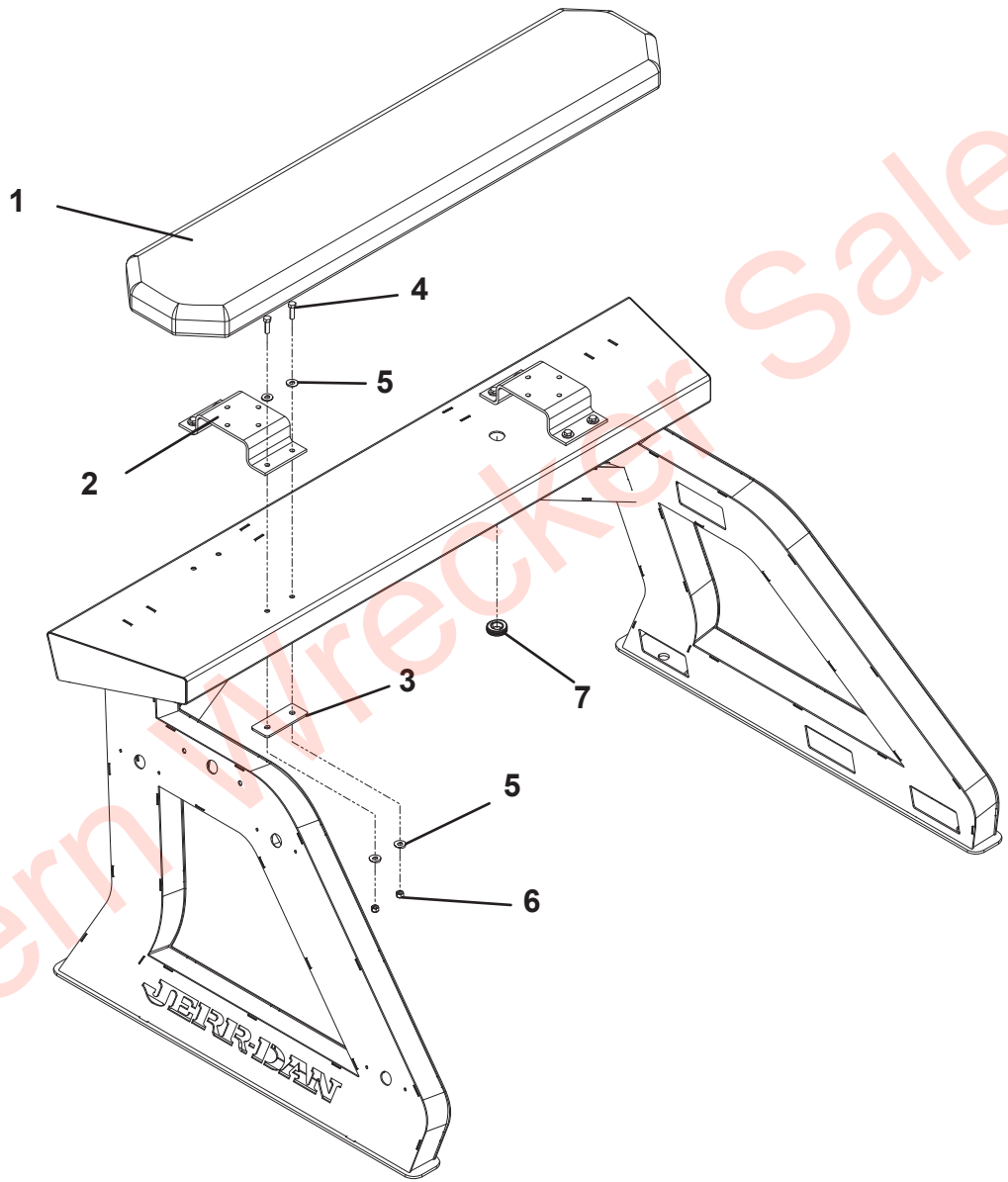

Eastern Wrecker Sales Inc

58” AMBER LIGHTBAR - CODE 3 - 1001136990

ITEM	PART NO.	DESCRIPTION	QTY	REV
	1001136990	58” Amber Lightbar - Code 3	Ref	B
1	9590310197	Lens, Clear Upper Outboard	2	
2	9590310200	Lens, Clear, Lower Outboard	2	
3	9590310203	Lens, Clear Lower Center	2	
4	9590310195	Lens, Clear Upper Center	2	
5	1001126269	3 Light D.O.T. Strip	1	
6	70050164	Worklight, LED	2	
7	1001130702	Module, LED Stop/Tail/Turn	2	
8	70050166	Bracket, Blank	4	
9	9590310206	Module, Bracket	4	
10	9590310205	Module, Led Amber	6	
11	9590310202	Bracket, Mounting	6	
12	70050167	Controller, General	1	
13	70050165	Cable, Jerr-Dan 9 Wire	1	
14	70050980	Harness, Internal Input	1	
15	70050981	Harness, Internal Output	1	

Eastern Wrecker Sales Inc

58” AMBER LIGHTBAR - CODE 3 - 1001136990

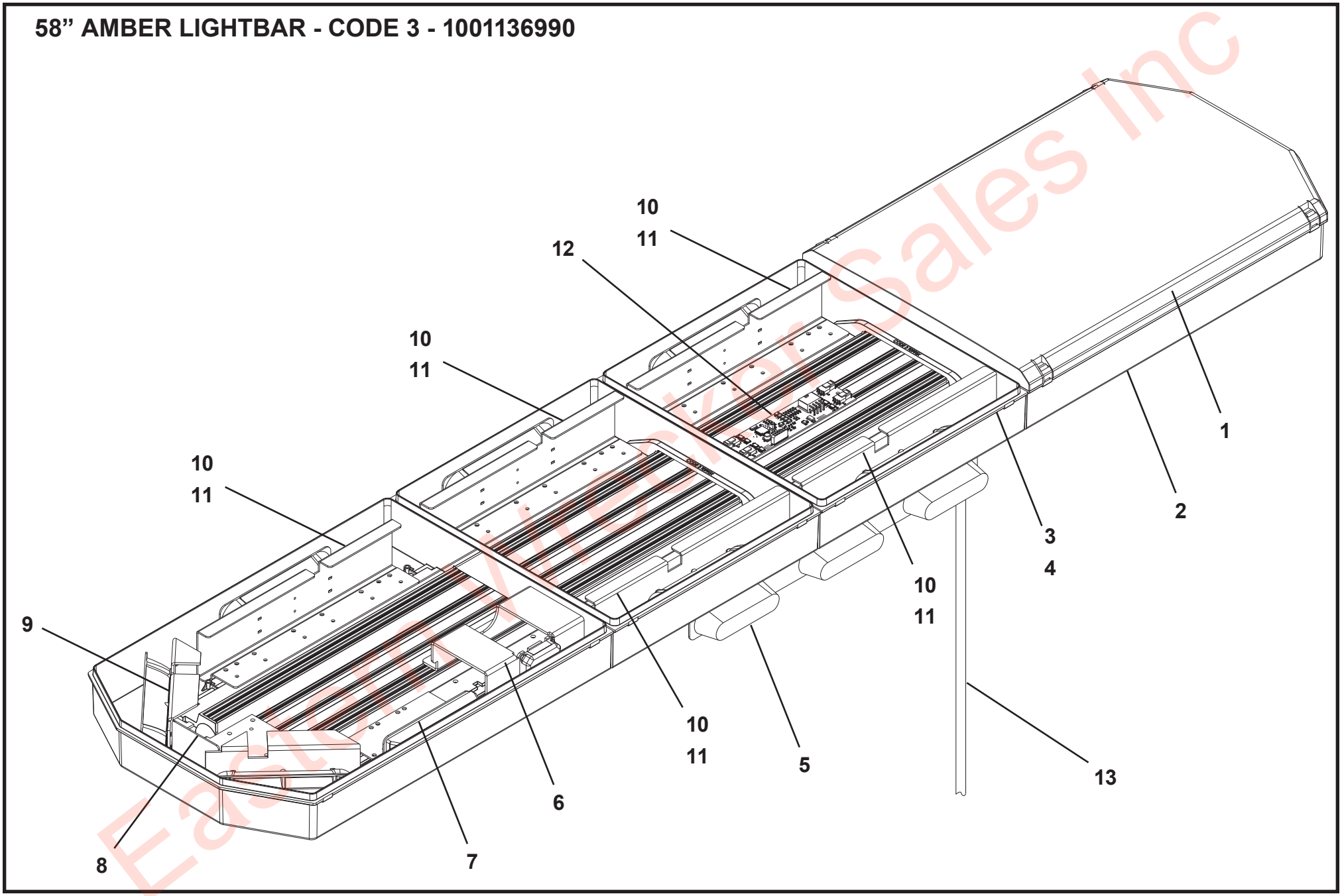

Eastern Wrecker Sales Inc

58” RED LIGHTBAR - CODE 3 - 1001152815

ITEM	PART NO.	DESCRIPTION	QTY	REV
	1001152815	58” RED Lightbar - Code 3	Ref	A
1	9590310197	Lens, Clear Upper Outboard	2	
2	9590310200	Lens, Clear, Lower Outboard	2	
3	9590310203	Lens, Clear Lower Center	2	
4	9590310195	Lens, Clear Upper Center	2	
5	1001126269	3 Light Strip	1	
6	70050164	Worklight	2	
7	1001130702	Module	2	
8	70050166	Bracket	4	
9	70050979	Bracket	6	
10	70050722	Module	6	
11	9590310202	Bracket	6	
12	70050167	Controller	1	
13	70050165	Cable	1	
14	70050980	Harness	1	
15	70050981	Harness	1	

Eastern Wrecker Sales Inc

58” RED LIGHTBAR - CODE 3 - 1001152815

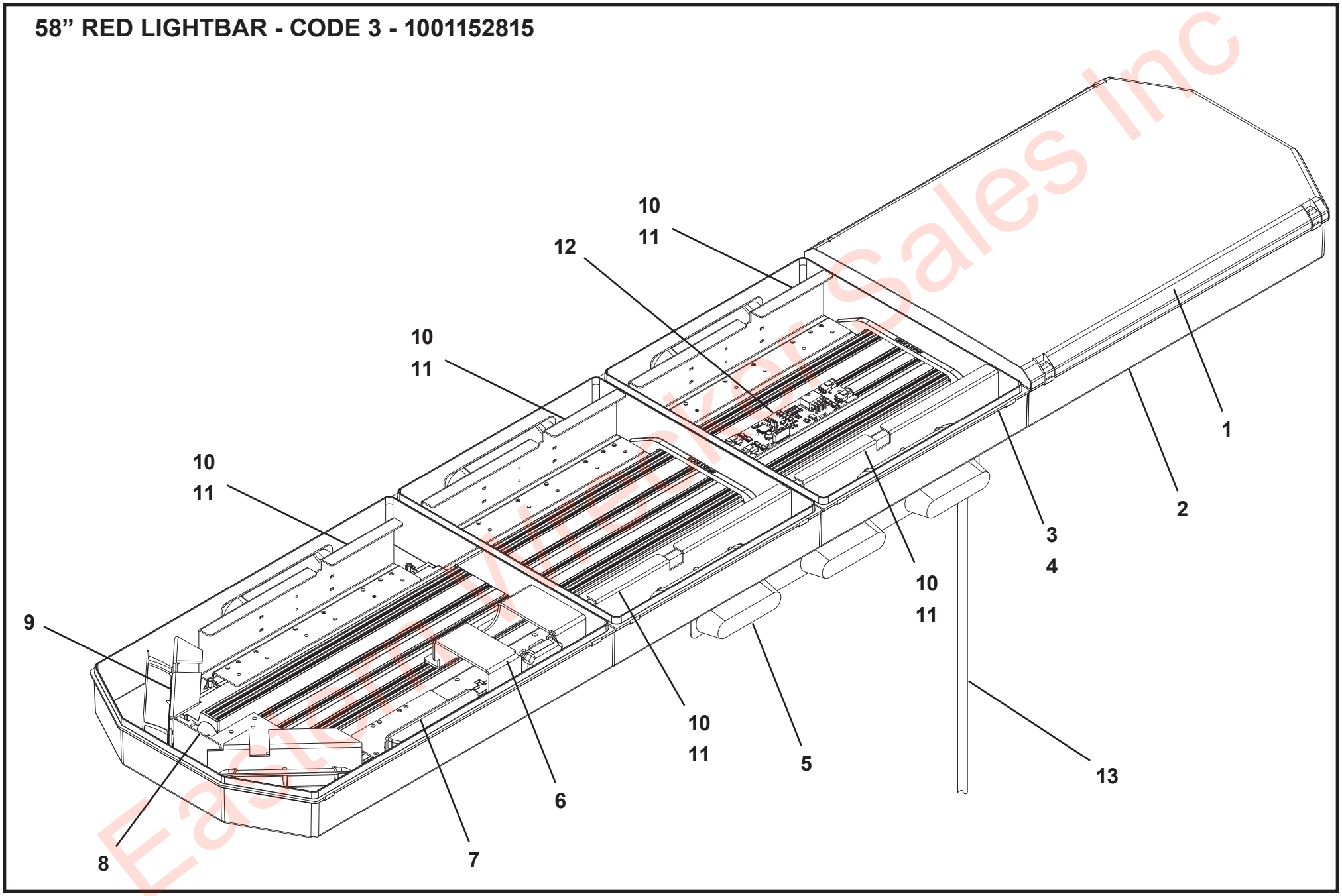

Eastern Wrecker Sales Inc

60” LIGHTBAR - WHELEN - 1001199475

ITEM	PART NO.	DESCRIPTION	QTY	REV
	1001199475	60” Lightbar - Whelen	Ref	B
1	70051058	Base	1	
2	70050169	Grommet	1	
3	70050170	Plug	2	
4	70051059	Screw, #10-24NC x 0.88"	1	
5	70051021	Bracket	6	
6	70051022	Bracket	1	
7	70051023	Circuit Board	1	
8	70051060	Cable	1	
9	70050665	Clamp	1	
10	70050174	Nut, #10-24NC	1	
11	70051026	Tiewrap	AR	
12	70051027	Bracket	2	
13	70051035	Bracket	4	
14	70051028	Screw, #6-32NC X 0.50"	10	
15	70051029	Lamp, Rear Amber	2	
16	70051030	Lamp, Front Amber	2	
17	70051063	Lamp, 6 LED	6	
18	70051064	Lamp, 3 LED	2	
19	70051065	Lamp	2	
20	70051066	Bracket	2	
21	70051036	Bracket	8	
22	70051039	Bracket	2	
23	70050176	Grommet	1	
24	70051068	Lamp	1	
25	70050178	Harness	1	
26	70051069	Bracket	2	
27	70050179	Screw, #10-32NF X 0.50"	2	
28	70050180	Lockwasher, #10 ID	2	
29	70050181	Housing	1	
30	70050175	Housing	2	
31	70051070	Harness	1	
32	70051071	Harness	1	
33	70051072	Harness	1	
34	70051073	Harness	1	
35	70051074	Harness	1	
36	70051075	Harness	1	
37	70051044	Bracket	20	
38	70051045	Tiewrap	AR	
39	70051076	Lens	1	
40	70051077	Lens	1	
41	70051078	Label	1	
42	70050203	Screw, #10-24NC X 1.25"	4	
43	70051062	Cover	2	
44	70051061	Cover	1	
45	70051048	Seal	4	
46	70051049	Lens	2	
47	70051053	Screw, #10 X 0.88"	12	
48	70050204	Adapter	2	
49	70051055	Label	1	
50	70050207	Label	1	
51	70051056	Label	2	
52	70051057	Label	1	
53	70050208	Housing	1	
54	70050209	Connector	1	
55	70050210	Housing	1	
56	70050211	Housing	1	

Eastern Wrecker Sales Inc

60” LIGHTBAR - WHELEN - 1001199475

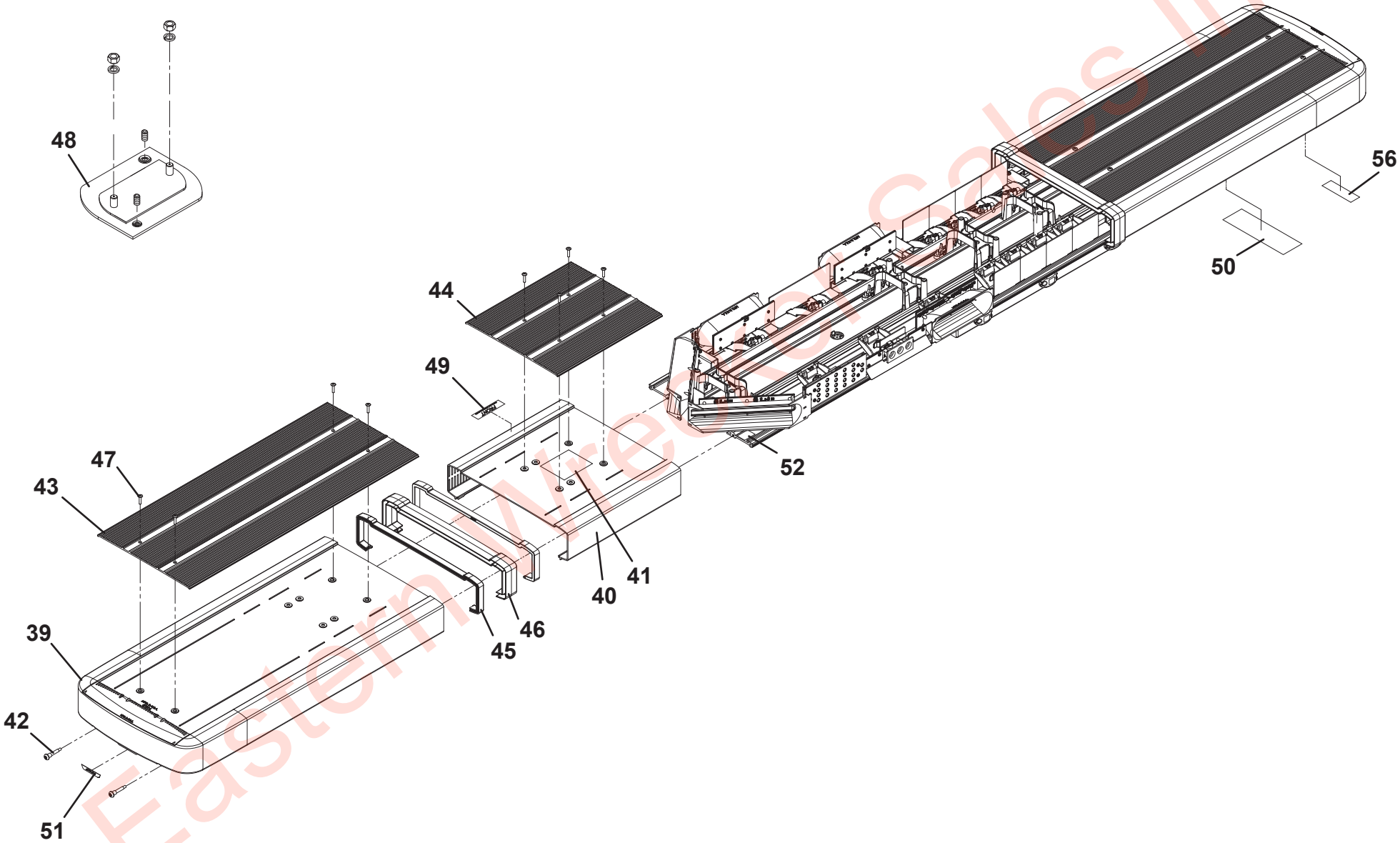

Eastern Wrecker Sales Inc

60” LIGHTBAR - WHELEN - 1001199475

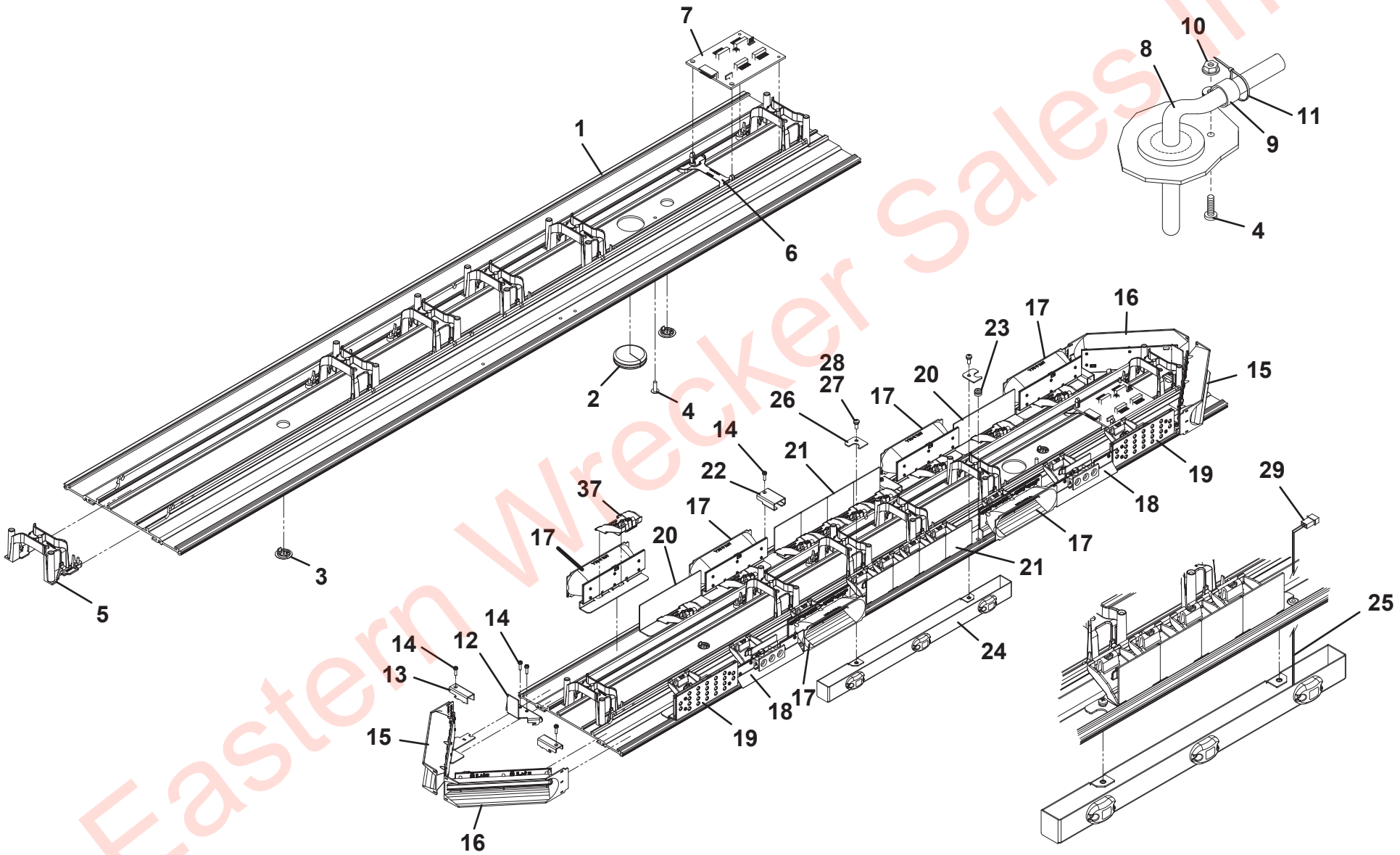

Eastern Wrecker Sales Inc

60” LIGHTBAR - WHELEN - 1001199475

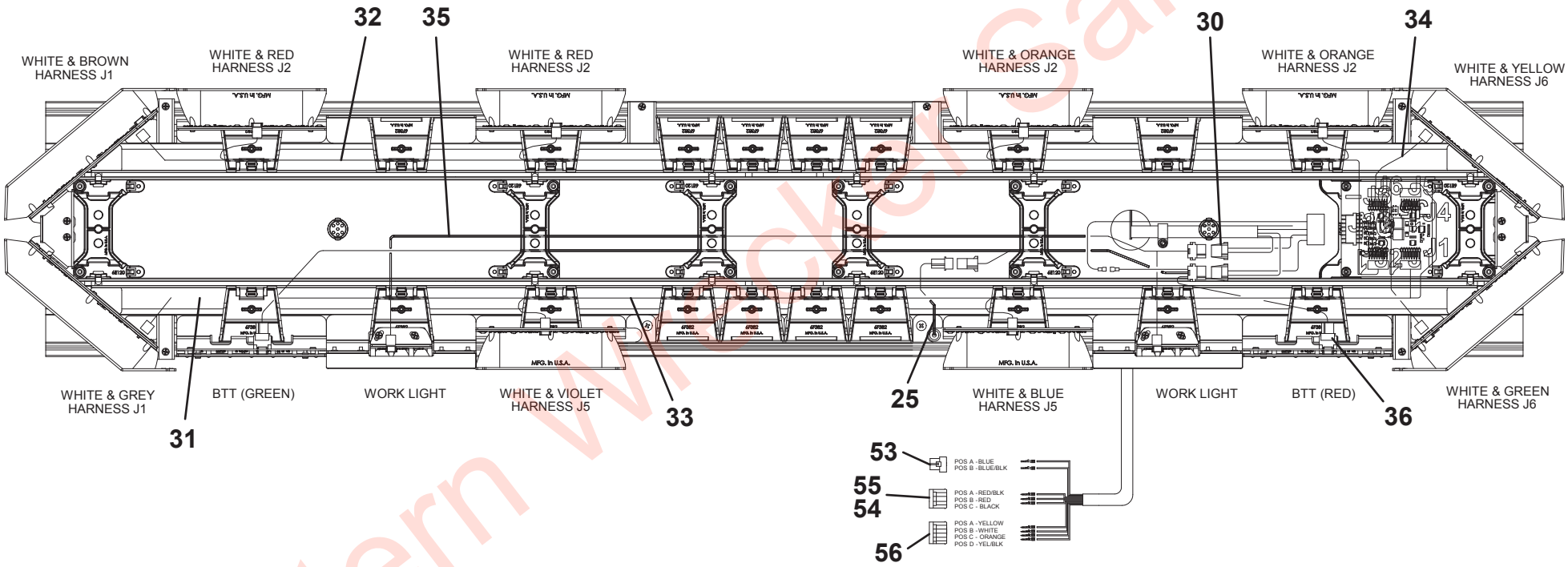

Eastern Wrecker Sales Inc

CAB MOUNTED LIGHT BAR

ITEM	PART NO.	DESCRIPTION	QTY	REV
	1001216570	Cab Mounted Light Bar	Ref	A
1	1001215955	Bracket, LH	1	
2	1001215956	Bracket, RH	1	
3	1001215957	Bracket, Center	1	
4	1001199477	Whelen Lightbar (See Separate Breakdown in this Section)	1	
5	1001213131	Nut, M6	8	
6	1001170307	Washer, M6 ID	8	
7	1001216317	Screw, M6	8	
8	1001216373	Nut, M8	4	
9	1001170329	Washer, M8	4	
10	1001216372	Screw, M8	4	
11	1001101025	Grommet	1	
12	1001216571	Harness	1	
13	5526000553	Tie Strap	4	

Eastern Wrecker Sales Inc

CAB MOUNTED LIGHT BAR

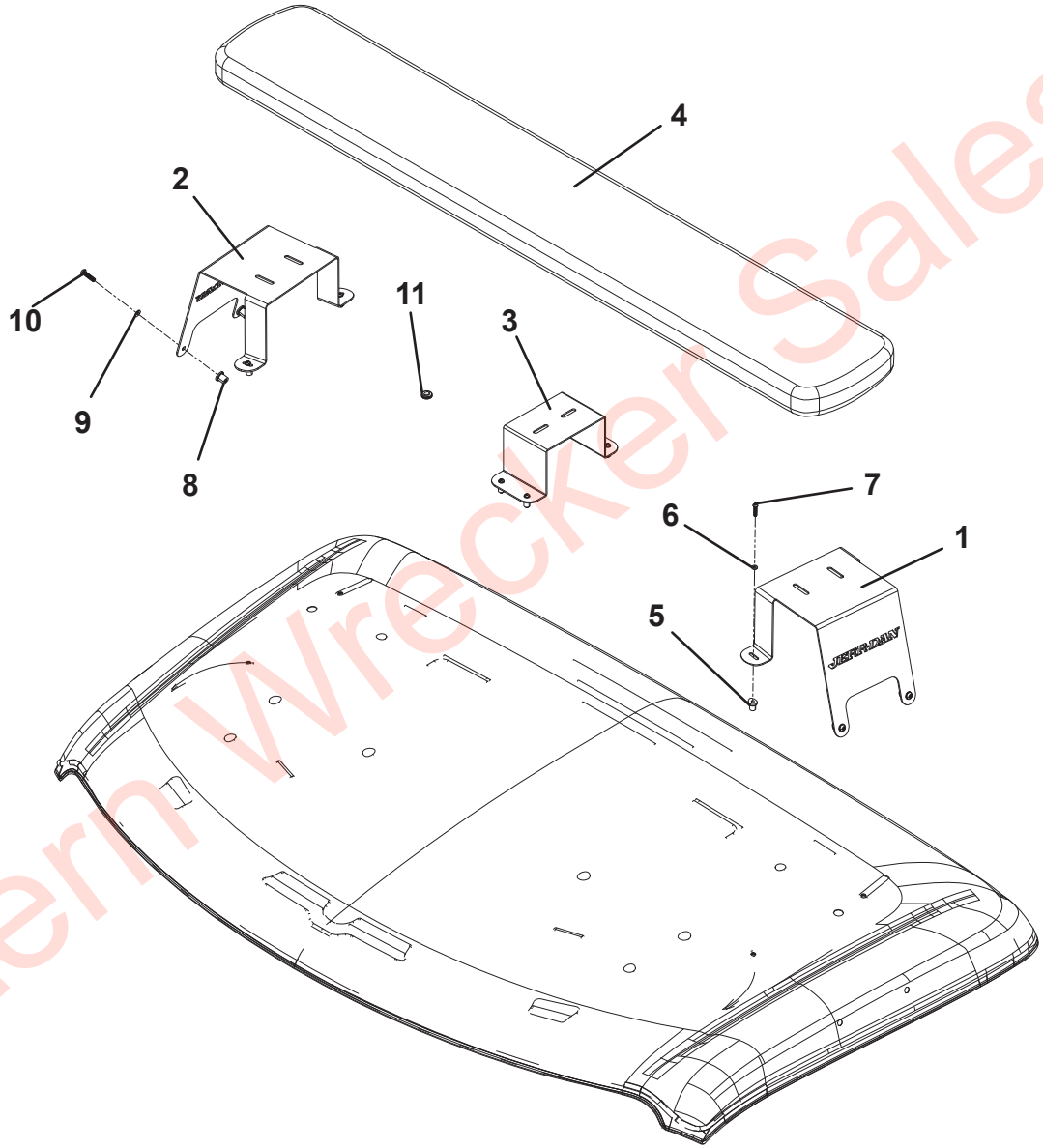

Eastern Wrecker Sales Inc

72” WHELEN LIGHT BAR

ITEM	PART NO.	DESCRIPTION	QTY	REV
	1001199477	72’’ Whelen Light Bar	Ref	B
1	70051341	Base	1	
2	70050169	Grommet	1	
3	70050170	Plug	2	
4	70051059	Screw, #10 - 24 x 0.625”	1	
5	70051021	Bracket	10	
6	70051022	Bracket	1	
7	70051023	Circuit Board	1	
8	70051060	Cable	1	
9	70050665	Cable Clamp	1	
10	70050174	Nut, #10 - 24	1	
11	70051026	Tie-Wrap	1	
12	70051027	Bracket	2	
13	70051035	Bracket	4	
14	70051028	Screw, #6 - 32 x 0.50”	12	
15	70051029	Corner Assembly, Front	A/R	
16	70051030	Corner Assembly, Rear	A/R	
17	70051063	LED Assembly, 6 light	A/R	
18	70051064	LED Assembly, 3 light	2	
19	70051065	Turn Signal Assembly	2	
20	70051066	Bracket	4	
21	70051036	Bracket	2	
22	70051039	Bracket	4	
23	70050176	Grommet	1	
24	70051068	ICC Cluster	1	
25	70050178	Harness	1	
26	70051069	Bracket	2	
27	70050179	Screw, #10 - 32 x 0.50”	2	
28	70050180	Washer, #10 ID	2	
29	70050181	Housing	1	
30	70050175	Housing	2	
31	70051343	Harness	1	
32	70051344	Harness	1	
33	70051345	Harness	1	
34	70051346	Harness	1	
35	70051347	Harness	1	
36	70051348	Harness	1	
37	70051044	Bracket	22	
38	70051045	Tie Wrap	A/R	
39	70051076	Lens Assembly	2	
40	70051077	Lens	1	
41	70051349	Lens	2	
42	70051078	Label	1	
43	70050203	Screw, #10-24 x 1.25”	4	
44	70051062	Cover	2	
45	70051061	Cover	1	
46	70051350	Cover	2	
47	70051048	Seal	8	
48	70051049	Divider	4	
49	70051053	Screw, #10 x 0.875”	20	
50	70050204	Adapter	2	
51	70051055	Decal, Front	1	
52	70050207	Decal, Serial Number	1	
53	70051056	Decal	2	
54	70051056	Decal	1	
55	70050208	Housing	1	
56	70050209	Connector	1	
57	70050210	Housing	1	
58	70050211	Housing	1	

Eastern Wrecker Sales Inc

72” WHELEN LIGHT BAR

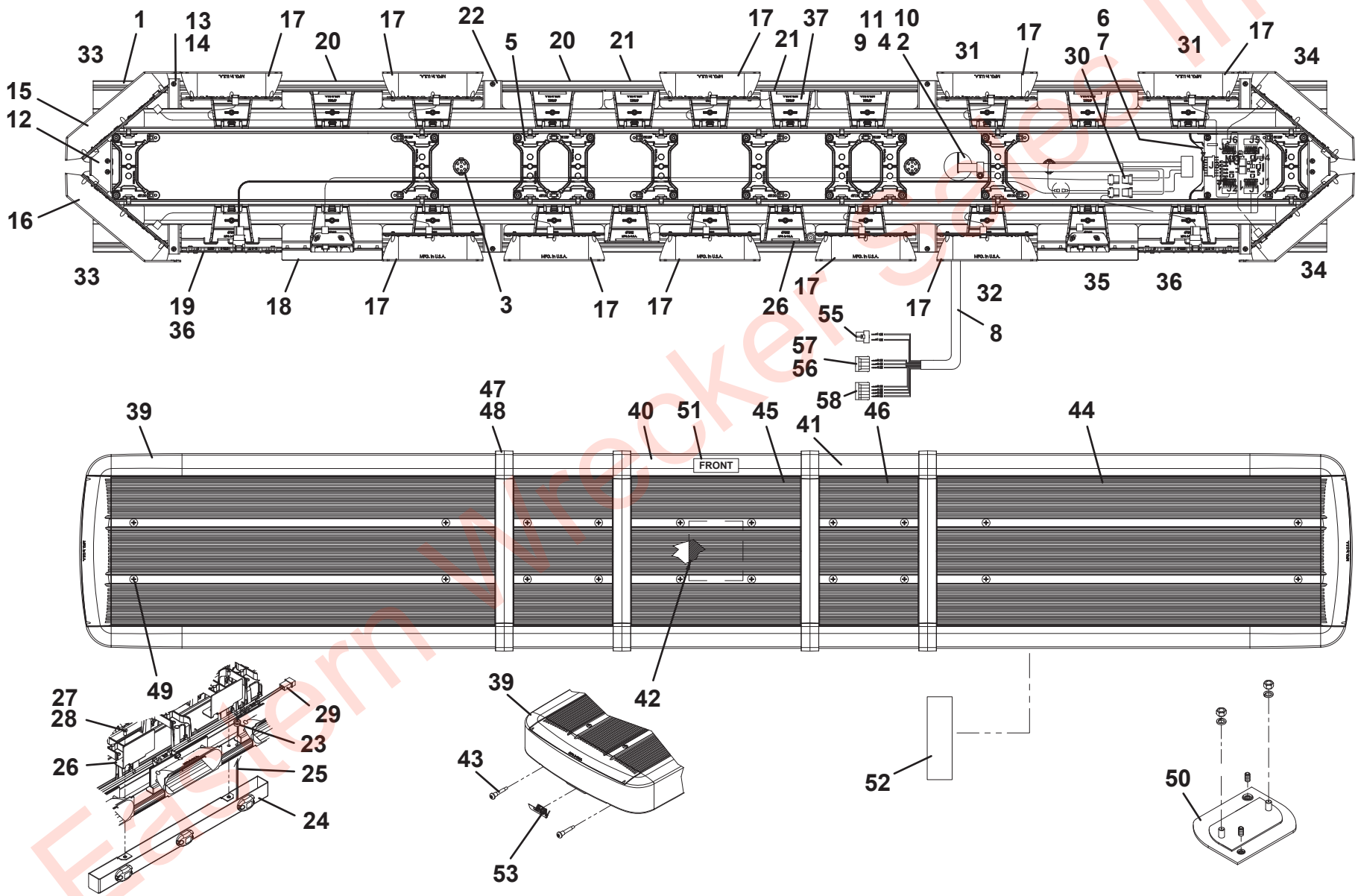

Eastern Wrecker Sales Inc

ELECTRICAL INSTALLATION - TANDEM AXLE

ITEM	PART NO.	DESCRIPTION	QTY	REV
	1001210000	Electrical Installation - Tandem Axle	Ref	E
1	0750604	Screw	8	
2	3760308	Retainer	4	
3	4460466	Terminal	1	
4	4460509	Terminal	6	
5	4740513	Washer, 0.25” ID	8	
6	1001122235	Bracket	4	
7	1001166930	Latch	4	
8	1001166974	Washer, 0.38” ID	14	
9	1001167607	Plug	2	
10	1001168320	Terminal	1	
11	1001168321	Terminal	1	
12	1001168322	Terminal	2	
13	1001168993	Capscrew, 0.38”-16NC x 1.50”	14	
14	1001174680	Lamp, Backup	2	
15	1001174681	Lamp, Tail light	4	
16	1001191602	Panel	1	
17	1001195257	Screw, 0.25” x 0.50”	85	
18	1001196552	Screw, #8 x 0.75”	32	
19	1001201384	Socket	1	
20	1001201926	Washer, #10 ID	4	
21	1001206505	Plate	1	
22	1001207734	Screw	4	
23	1001207736	Washer, #10 ID	8	
24	1001208066	Connector	1	
25	1001208303	Nut, #10-24	4	
26	7114100618	Screw, #10 - 24 x 0.75”	2	
27	7178000025	License Plate Bracket	1	
28	7274000040	Clamp	2	
29	7280000006	Clip	83	
30	5526000553	Tie Strap	30	
31	7493000026	Grommet	6	
32	7590000105	Light	1	
34	7660102601	Nut, #10-24NC	4	
35	7660162601	Locknut, 0.38” - 16NC	14	
36	7950160143	Flatwasher, 0.38” ID	28	
37	1001168328	Cable	1	
38	1001203234	Electrical Assembly	1	
39	1001209010	Harness, LH	1	
40	1001215445	Harness, RH	1	
41	7590000343	Light	4	
42	1001209031	Harness, Tow light	1	
43	1001209040	Cable	1	
44	1001209041	Cable	1	
45	1001209042	Cable	1	
46	1001209044	Cable	1	
47	1001209051	Harness	2	
48	1001207212	Harness	2	
49	1001207213	Harness	2	
50	1001209054	Harness	2	
51	1001209365	Seal	1	
52	1001209366	Seal	4	
53	7274000042	Clamp	5	
54	1001204788	Terminal Nut	1	
55	1001205043	Terminal Nut	4	
56	7114100818	Screw, #10 - 24NC x 1.00”	2	
57	1001205044	Terminal Washer	4	
58	1001204789	Terminal Washer	1	
60	1001220431	Grommet	4	

Eastern Wrecker Sales Inc

ELECTRICAL INSTALLATION - TANDEM AXLE

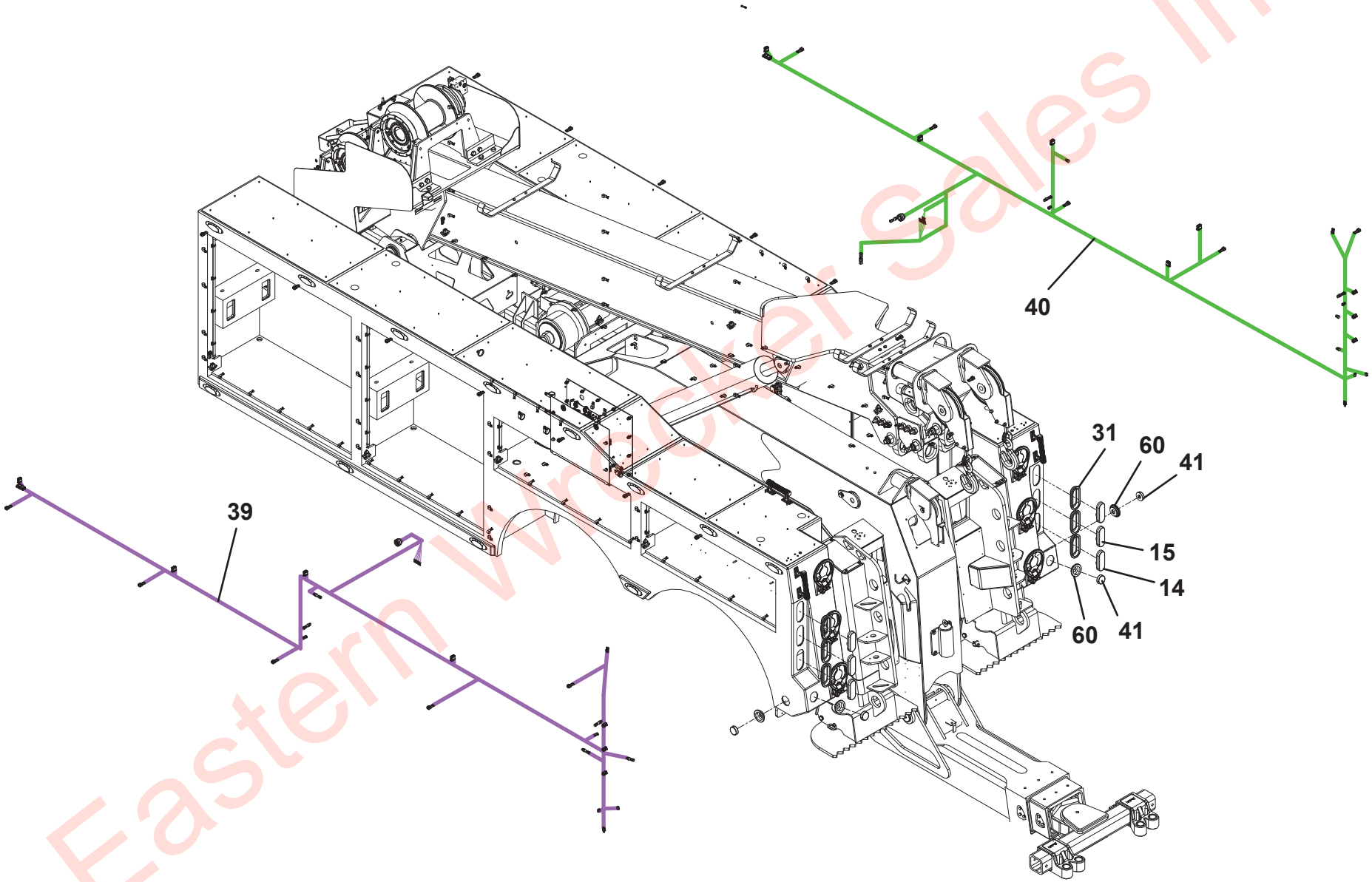

Eastern Wrecker Sales Inc

ELECTRICAL INSTALLATION - TANDEM AXLE

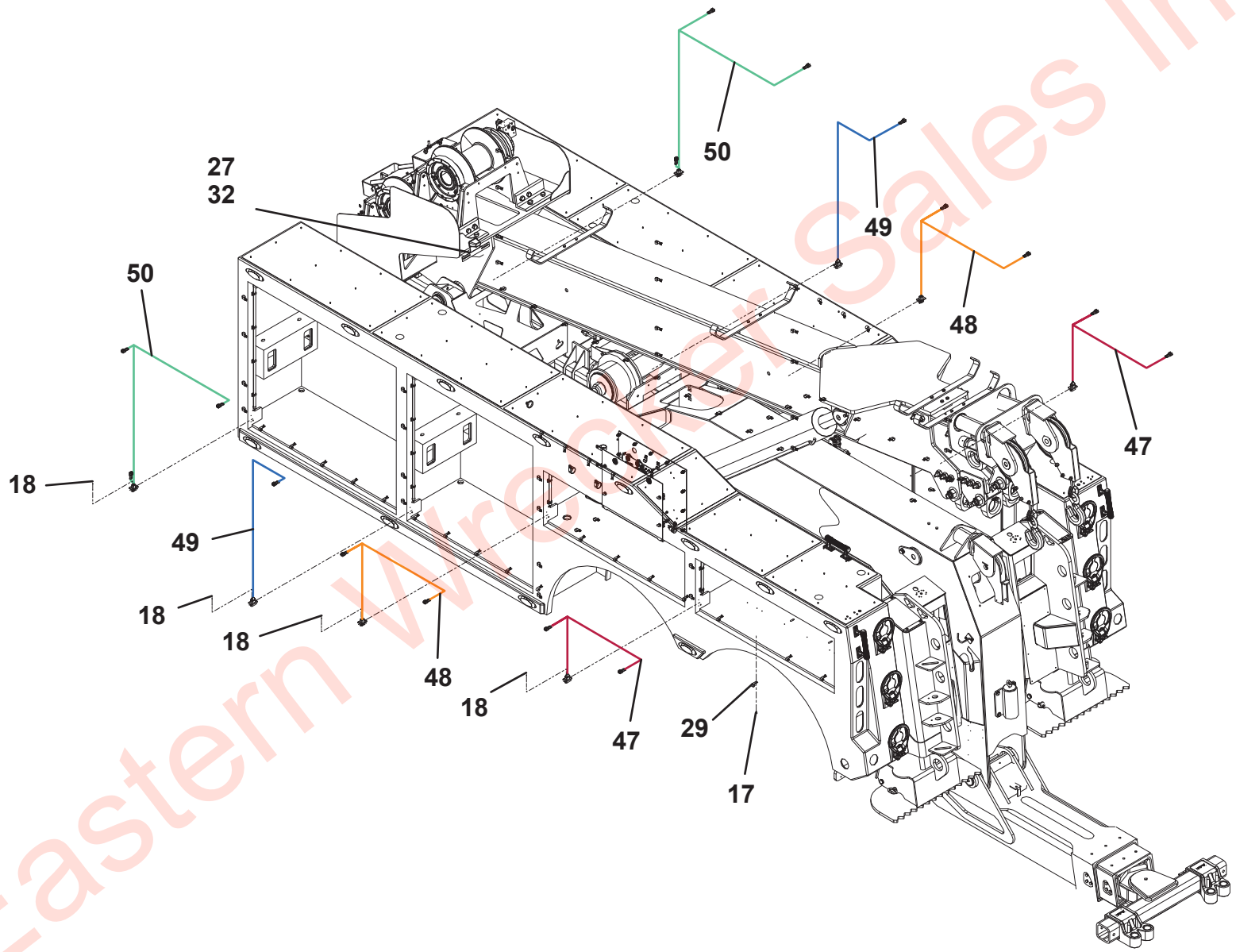

Eastern Wrecker Sales Inc

ELECTRICAL INSTALLATION - TANDEM AXLE

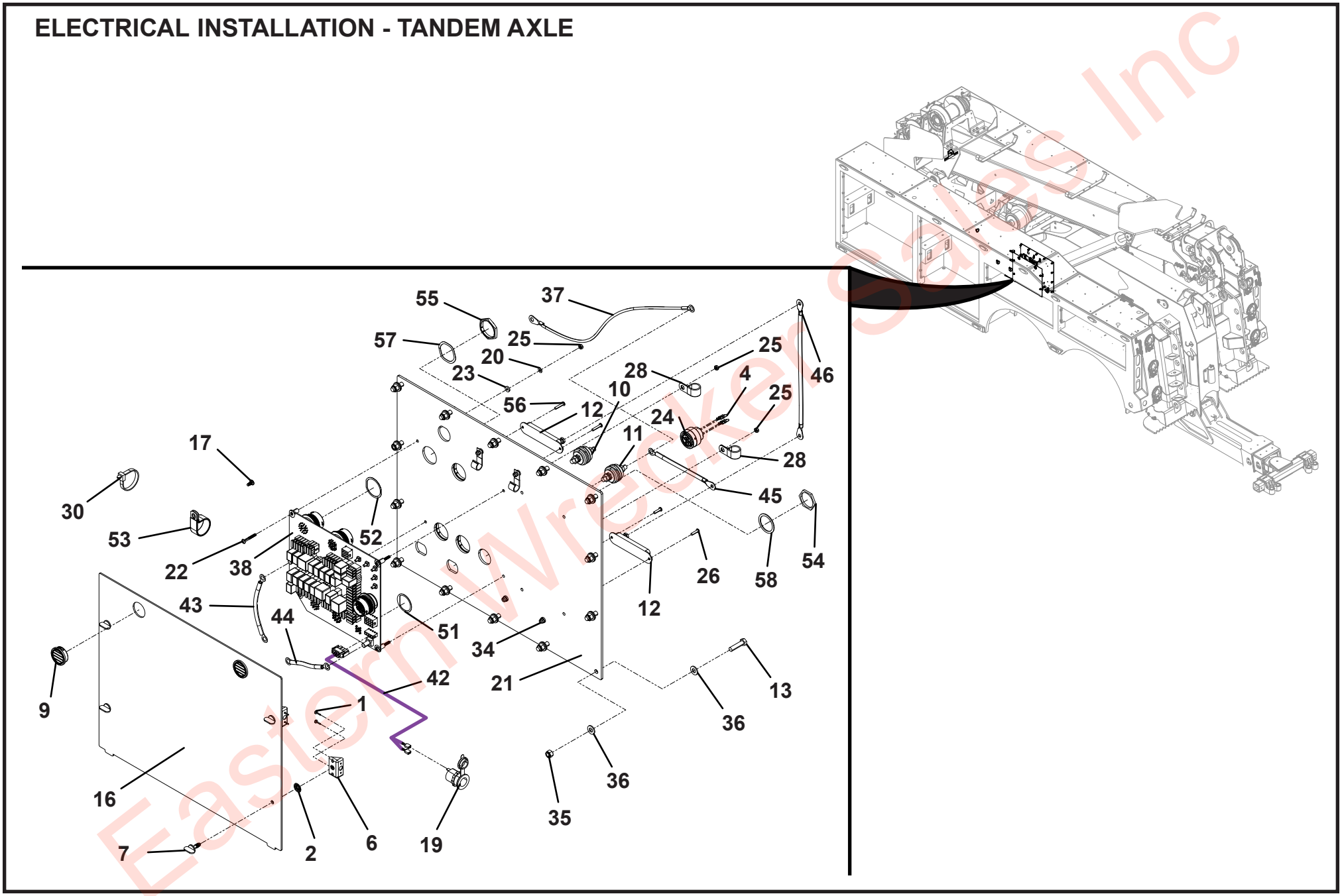

Eastern Wrecker Sales Inc

ELECTRICAL INSTALLATION - TRI-AXLE

ITEM	PART NO.	DESCRIPTION	QTY	REV
	1001210001	Electrical Installation - Tri-Axle	Ref	E
1	0750604	Screw	8	
2	3760308	Retainer	4	
3	4460466	Terminal	1	
4	4460509	Terminal	6	
5	4740513	Washer, 0.25” ID	8	
6	1001122235	Bracket	4	
7	1001166930	Latch	4	
8	1001166974	Washer, 0.38” ID	14	
9	1001167607	Plug	2	
10	1001168320	Terminal	1	
11	1001168321	Terminal	1	
12	1001168322	Terminal	2	
13	1001168993	Capscrew, 0.38”-16NC x 1.50”	14	
14	1001174680	Lamp, Backup	2	
15	1001174681	Lamp, Tail light	4	
16	1001191602	Panel	1	
17	1001195257	Screw, 0.25” x 0.50”	85	
18	1001196552	Screw, #8 x 0.75”	32	
19	1001201384	Socket	1	
20	1001201926	Washer, #10 ID	4	
21	1001206505	Plate	1	
22	1001207734	Screw	4	
23	1001207736	Washer, #10 ID	8	
24	1001208066	Connector	1	
25	1001208303	Nut, #10-24	4	
26	7114100618	Screw, #10 - 24 x 0.75”	2	
27	7178000025	License Plate Bracket	1	
28	7274000040	Clamp	2	
29	7280000006	Clip	83	
30	5526000553	Tie Strap	30	
31	7493000026	Grommet	6	
32	7590000105	Light	1	
34	7660102601	Nut, #10-24NC	4	
35	7660162601	Locknut, 0.38” - 16NC	14	
36	7950160143	Flatwasher, 0.38” ID	28	
37	1001168328	Cable	1	
38	1001203234	Electrical Assembly	1	
39	1001209010	Harness, LH	1	
40	1001215445	Harness, RH	1	
41	7590000343	Light	4	
42	1001209031	Harness, Tow light	1	
43	1001209040	Cable	1	
44	1001209041	Cable	1	
45	1001209042	Cable	1	
46	1001209044	Cable	1	
47	1001209051	Harness	2	
48	1001207212	Harness	2	
49	1001207213	Harness	2	
50	1001209054	Harness	2	
51	1001209365	Seal	1	
52	1001209366	Seal	4	
53	7274000042	Clamp	5	
54	1001204788	Terminal Nut	1	
55	1001205043	Terminal Nut	4	
56	7114100818	Screw, #10 - 24NC x 1.00”	2	
57	1001205044	Terminal Washer	4	
58	1001204789	Terminal Washer	1	
60	1001220431	Grommet	4	

Eastern Wrecker Sales Inc

ELECTRICAL INSTALLATION - TRI-AXLE

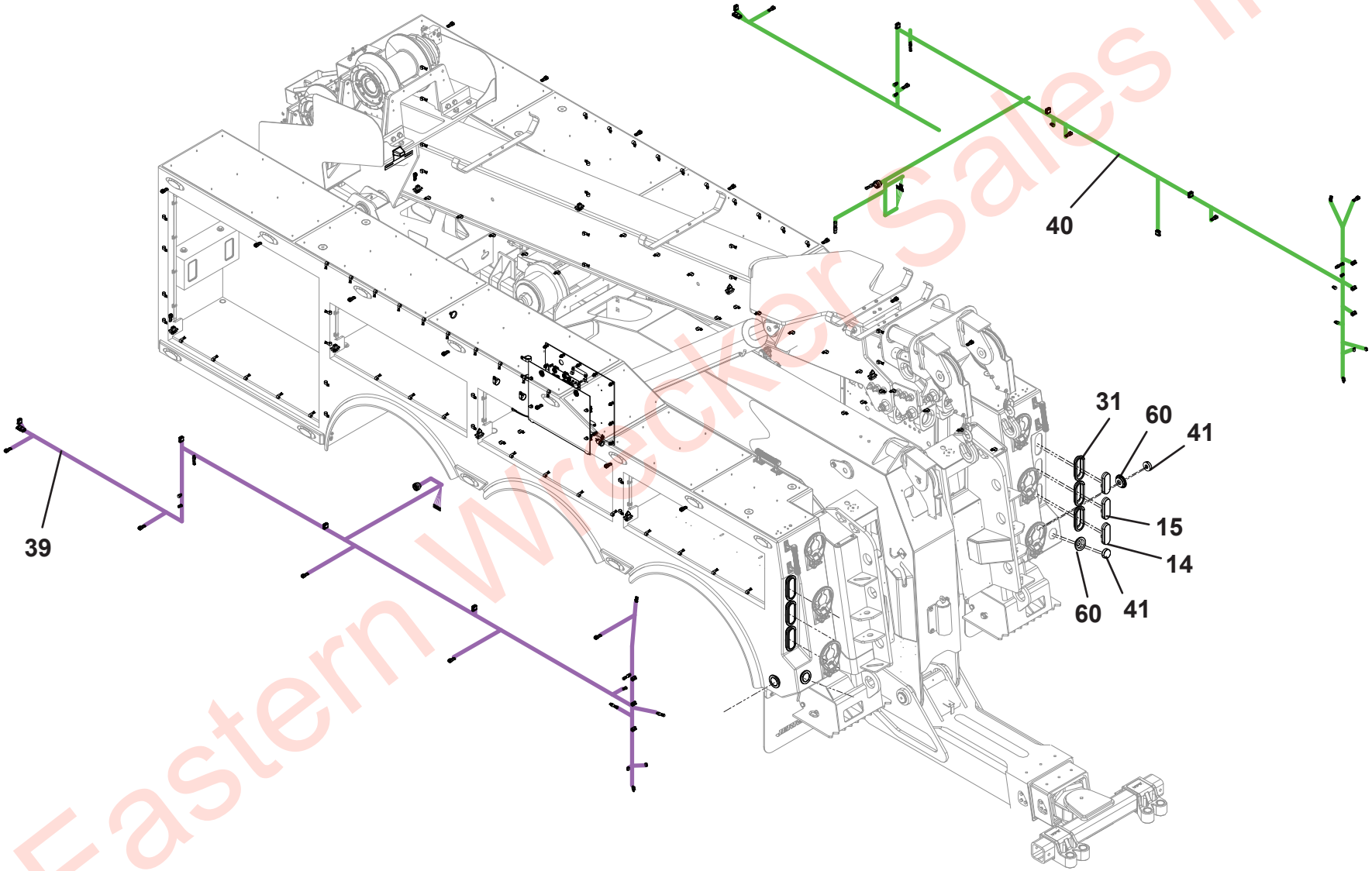

Eastern Wrecker Sales Inc

ELECTRICAL INSTALLATION - TRI-AXLE

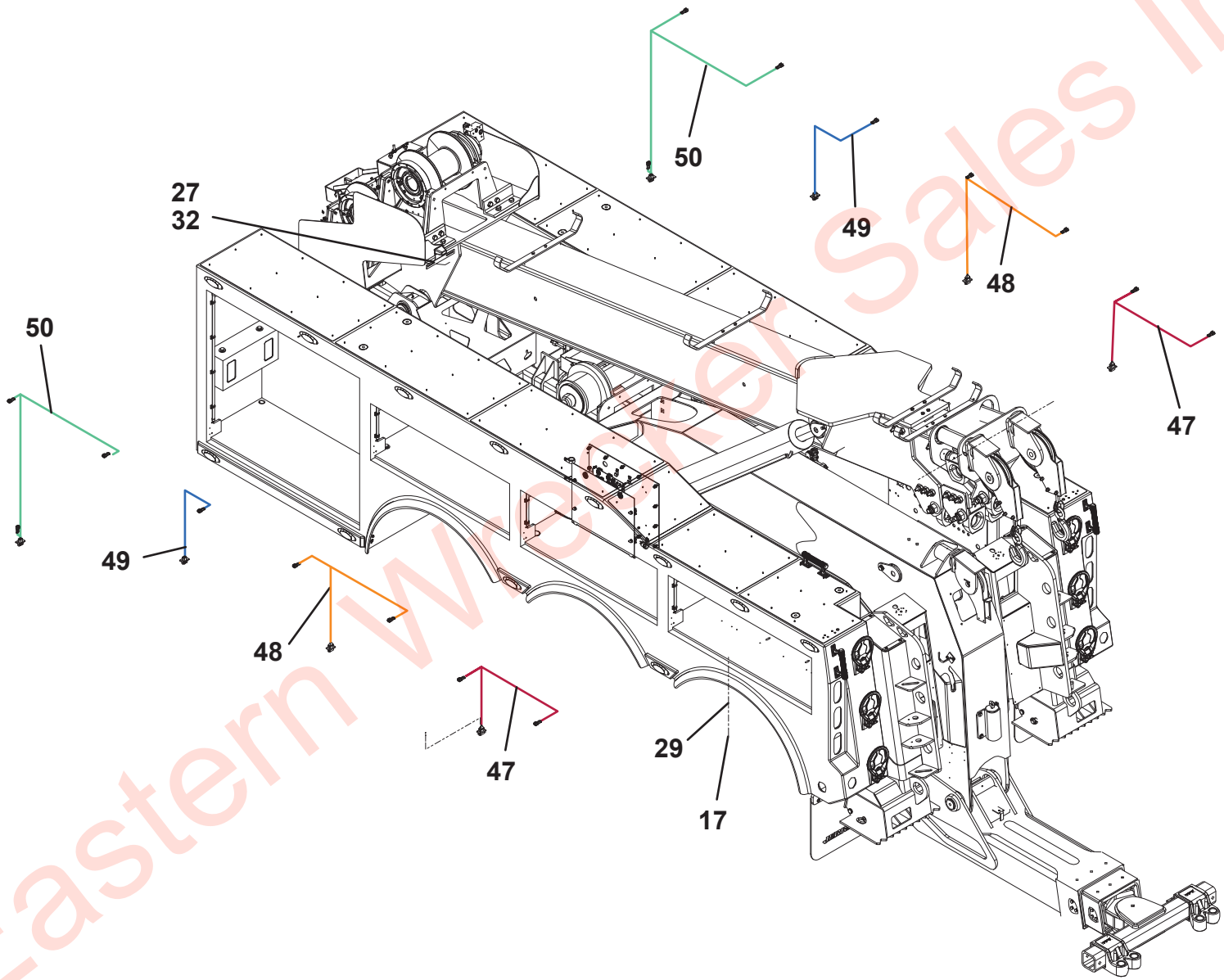

Eastern Wrecker Sales Inc

ELECTRICAL INSTALLATION - TRI-AXLE

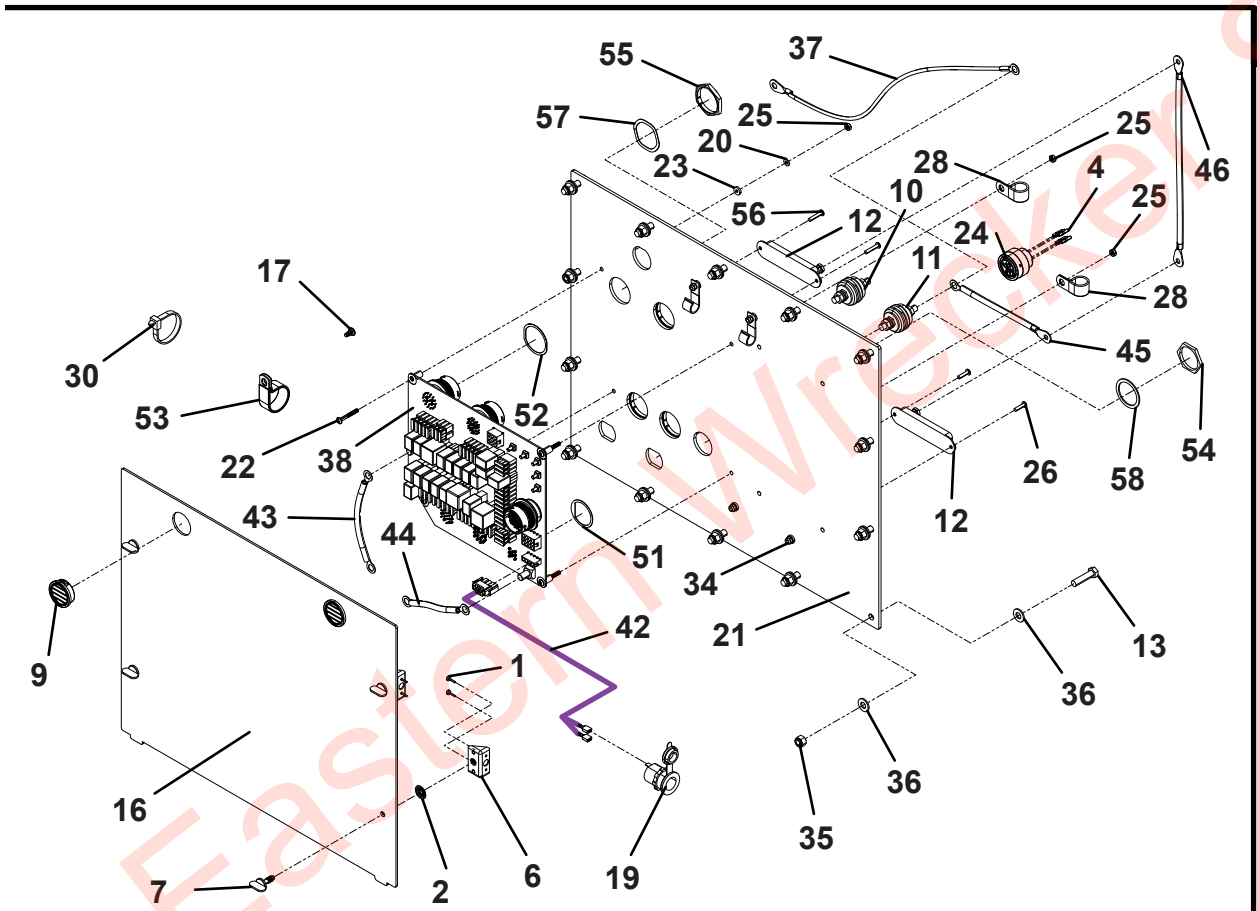

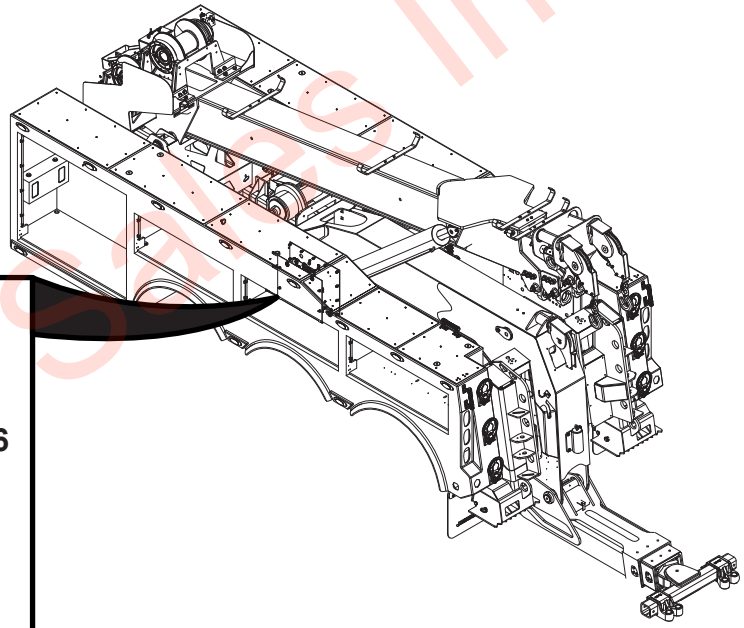

Eastern Wrecker Sales Inc

CENTER HARNESS INSTALLATION - 174” CT

ITEM	PART NO.	DESCRIPTION	QTY	REV
	1001210003	Center Harness Installation - 174” CT	Ref	C
1	0641412	Capscrew, 0.25” - 20NC x 1.50”	2	
2	4711400	Washer, 0.25” ID	4	
3	7345242202	Terminal	2	
4	7346000045	Tubing	0.25in	
5	7660142600	Locknut, 0.25” - 20NC	2	
6	7870000043	Switch Breaker	1	
7	7978000011	Cable	30FT	
8	8597650001	Loom	30FT	
9	1001125479	Terminal	2	
10	1001215040	Harness	1	
11	5526000553	Tie Strap	25	

Eastern Wrecker Sales Inc

CENTER HARNESS INSTALLATION - 174” CT

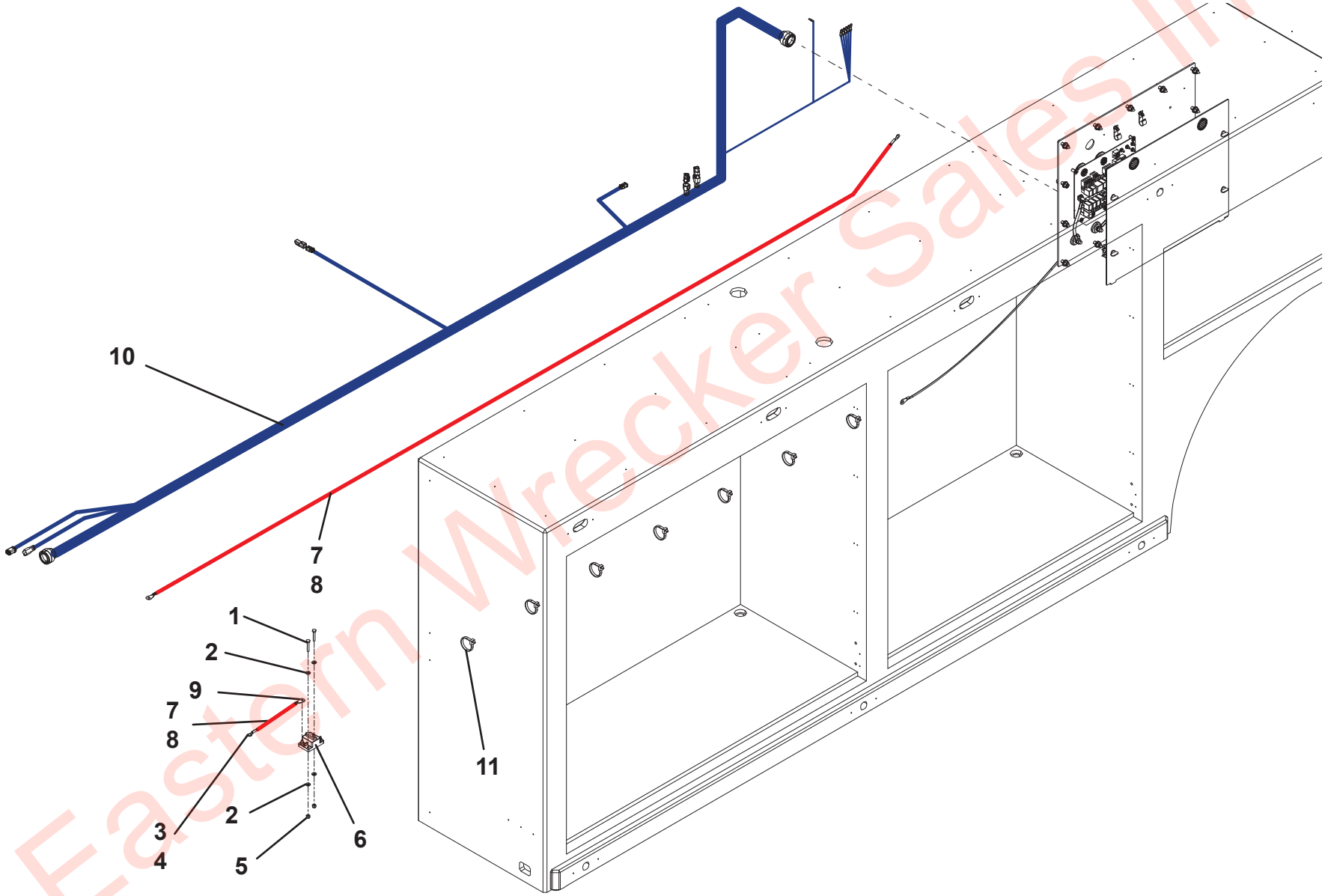

Eastern Wrecker Sales Inc

CENTER HARNESS INSTALLATION - 225” CT

ITEM	PART NO.	DESCRIPTION	QTY	REV
	1001210002	Center Harness Installation - 225” CT	Ref	C
1	0641412	Capscrew, 0.25” - 20NC x 1.50”	2	
2	4711400	Washer, 0.25” ID	4	
3	7345242202	Terminal	2	
4	7346000045	Tubing	0.25in	
5	7660142600	Locknut, 0.25” - 20NC	2	
6	7870000043	Switch Breaker	1	
7	7978000011	Cable	30FT	
8	8597650001	Loom	30FT	
9	1001125479	Terminal	2	
10	1001215041	Harness	1	
11	5526000553	Tie Strap	25	

Eastern Wrecker Sales Inc

CENTER HARNESS INSTALLATION - 225” CT

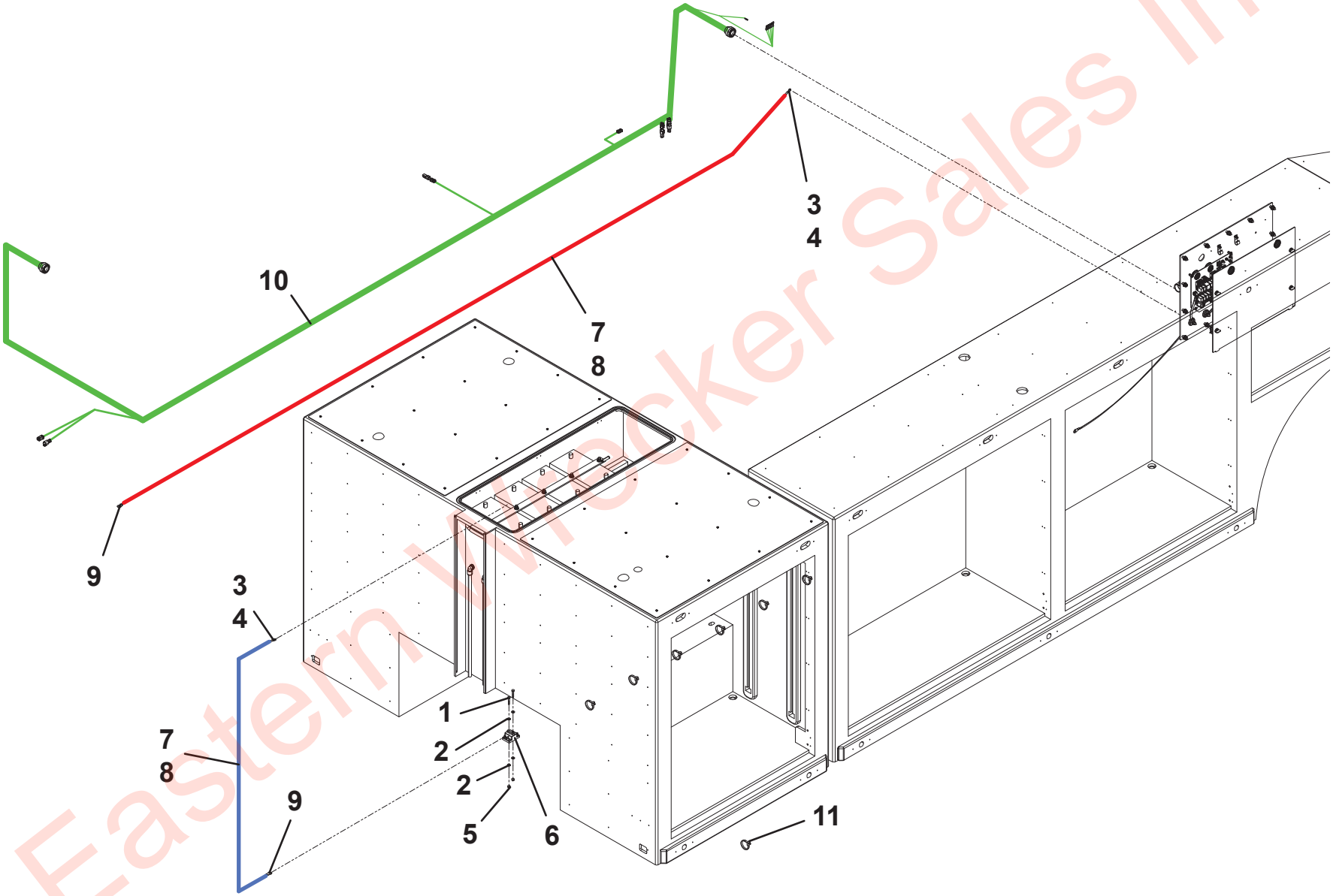

Eastern Wrecker Sales Inc

CENTER HARNESS INSTALLATION - 265” CT

ITEM	PART NO.	DESCRIPTION	QTY	REV
	1001215038	Center Harness Installation - 265” CT	Ref	B
1	0641412	Capscrew, 0.25” - 20NC x 1.50”	2	
2	4711400	Washer, 0.25” ID	4	
3	7345242202	Terminal	2	
4	7346000045	Tubing	0.25in	
5	7660142600	Locknut, 0.25” - 20NC	2	
6	7870000043	Switch Breaker	1	
7	7978000011	Cable	30FT	
8	8597650001	Loom	30FT	
9	1001125479	Terminal	2	
10	1001215048	Harness	1	
11	5526000553	Tie Strap	25	

Eastern Wrecker Sales Inc

CENTER HARNESS INSTALLATION - 265” CT

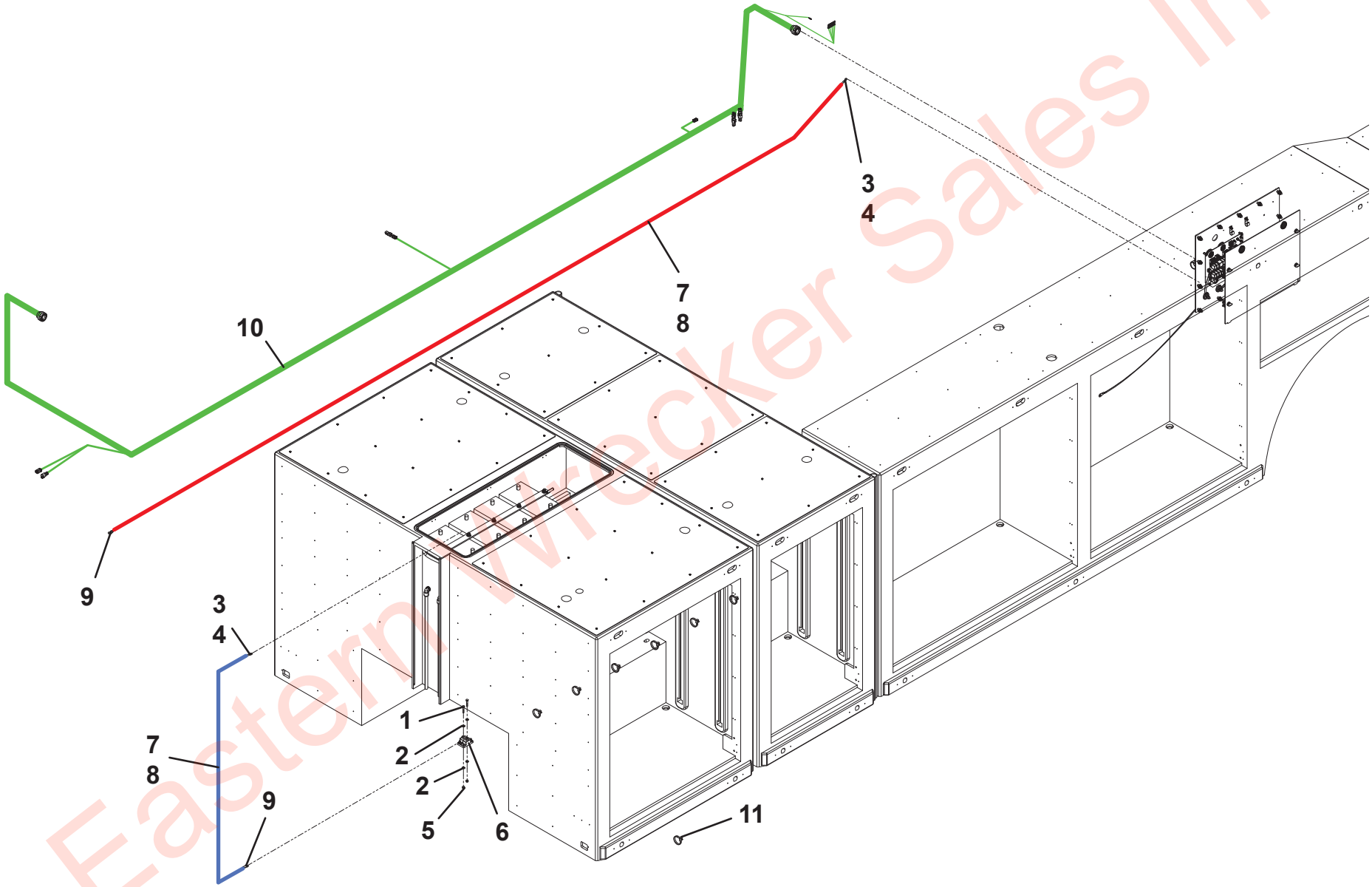

Eastern Wrecker Sales Inc

BACKUP ALARM INSTALLATION

ITEM	PART NO.	DESCRIPTION	QTY	REV
	1001213538	Backup Alarm Installation	Ref	A
1	7011000006	Alarm, Backup	1	
	1001175061	Alarm, Backup Variable	1	
2	7790141251	Screw, 0.25” x 0.75”	2	

Eastern Wrecker Sales Inc

BACKUP ALARM INSTALLATION

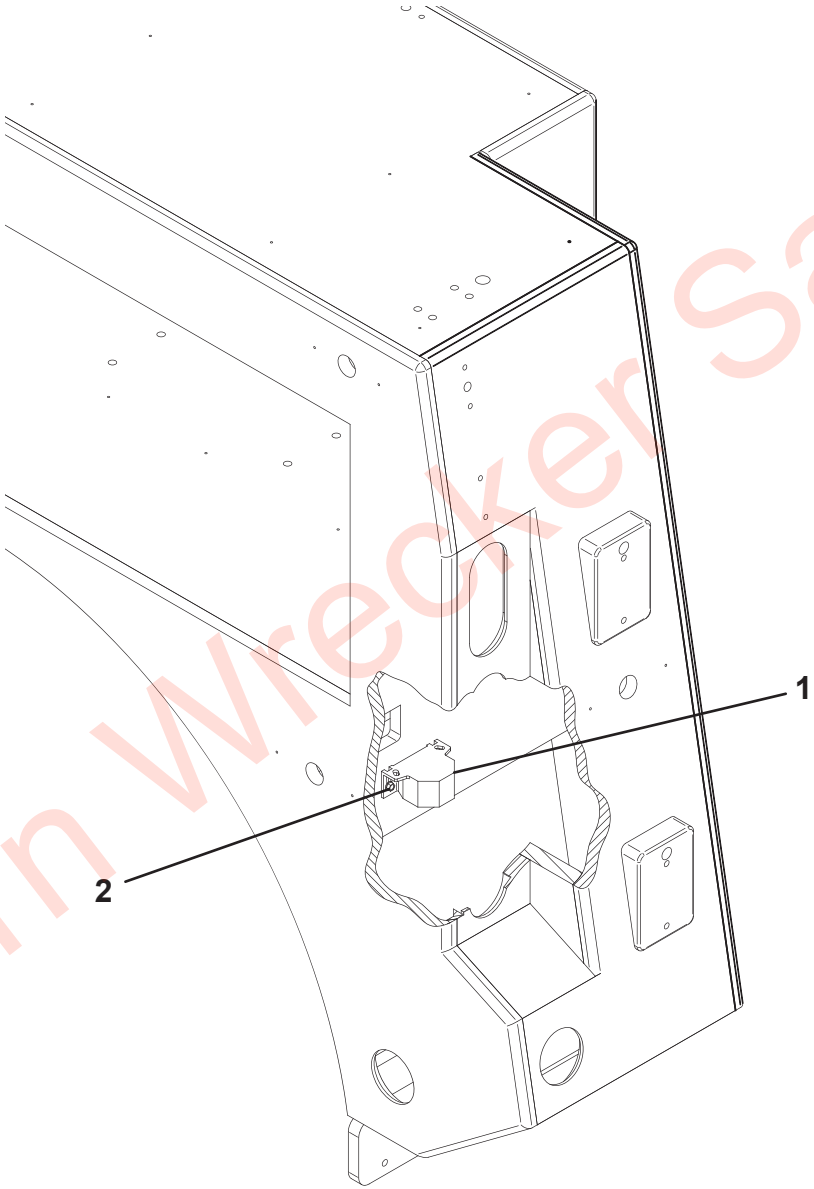

Eastern Wrecker Sales Inc

E-STOP INSTALLATION

ITEM	PART NO.	DESCRIPTION	QTY	REV
	1001231612	E-Stop Installation	Ref	A
1	7870000128	Switch	2	
2	7870000129	Switch	2	
3	1001171394	Harness	1	
4	7345001714	Terminal	2	
5	7346000039	Tubing	1	

Eastern Wrecker Sales Inc

E-STOP INSTALLATION

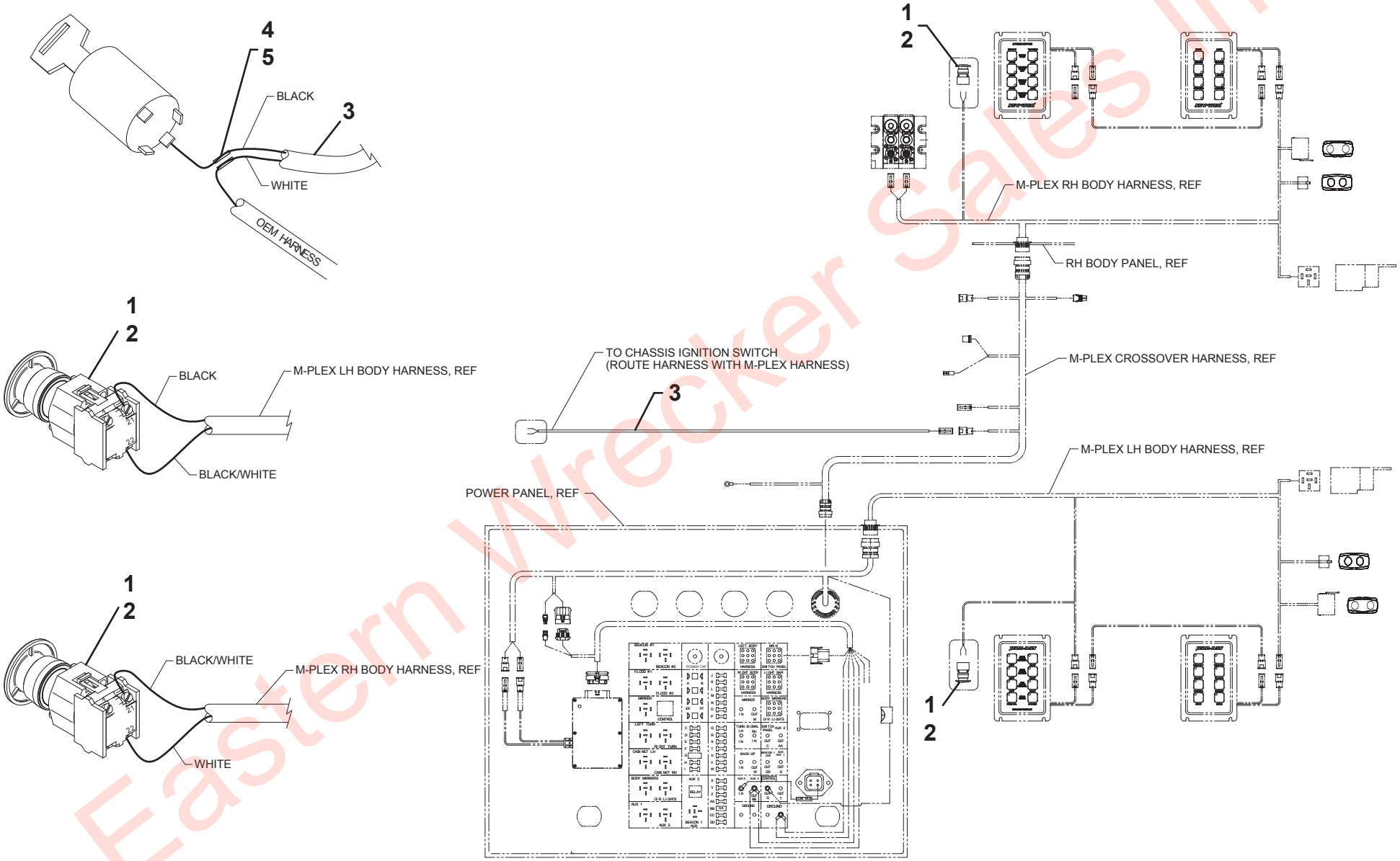

Eastern Wrecker Sales Inc

MARKER LIGHT INSTALLATION - TANDEM

ITEM	PART NO.	DESCRIPTION	QTY	REV
	1001206683	Marker Light Installation - Tandem	Ref	B
1	1001192958	Screw, #10 x 0.50”	48	
2	7590000262	Light, Amber	22	
3	7590000282	Light, Red	2	

Eastern Wrecker Sales Inc

MARKER LIGHT INSTALLATION - TANDEM

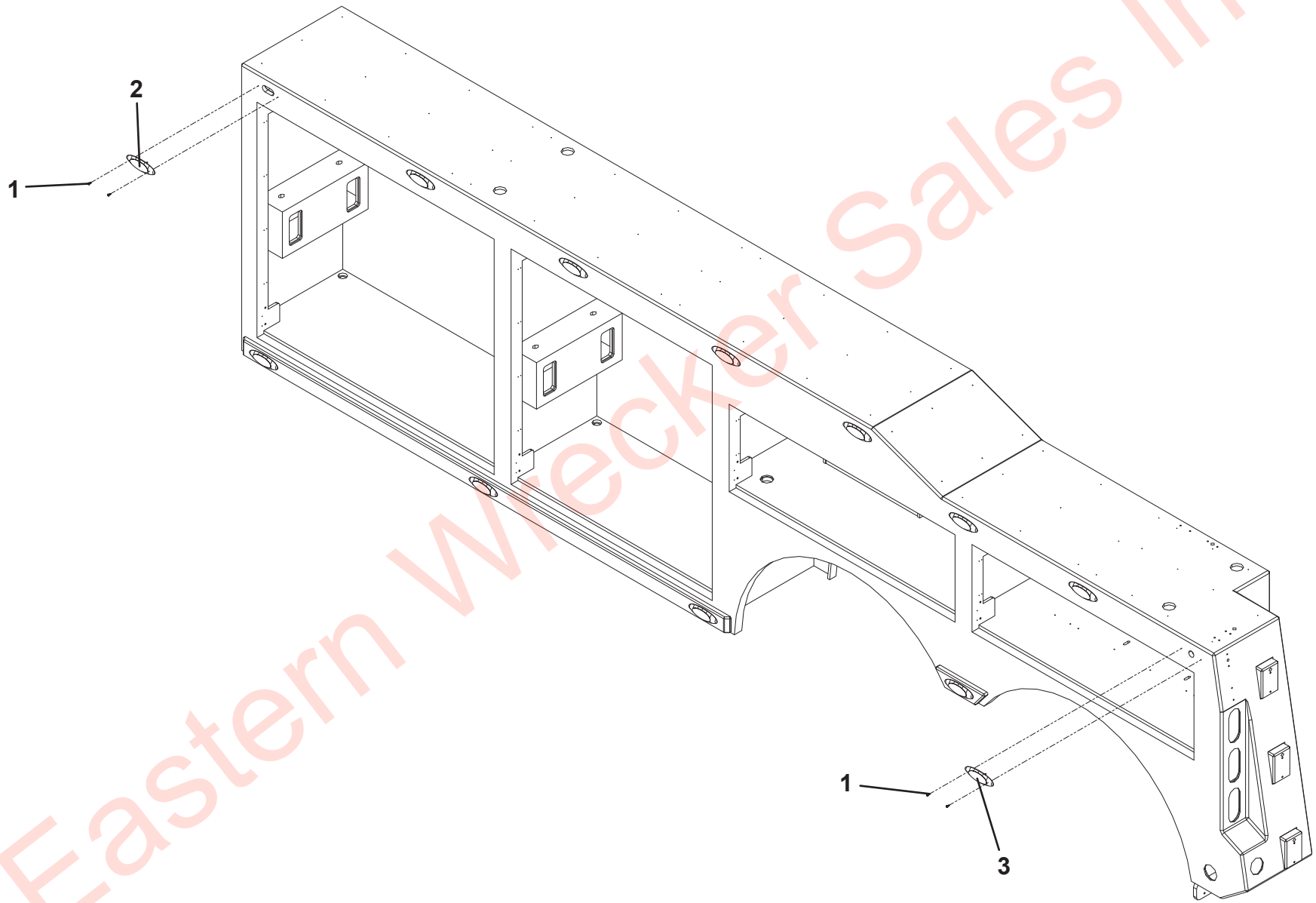

Eastern Wrecker Sales Inc

MARKER LIGHT INSTALLATION - TRI-AXLE

ITEM	PART NO.	DESCRIPTION	QTY	REV
	1001206684	Marker Light Installation - Tri-Axle	Ref	B
1	1001154101	Screw, #10 x 0.38”	48	
2	7590000262	Light, Amber	22	
3	7590000282	Light, Red	2	

Eastern Wrecker Sales Inc

MARKER LIGHT INSTALLATION - TRI-AXLE

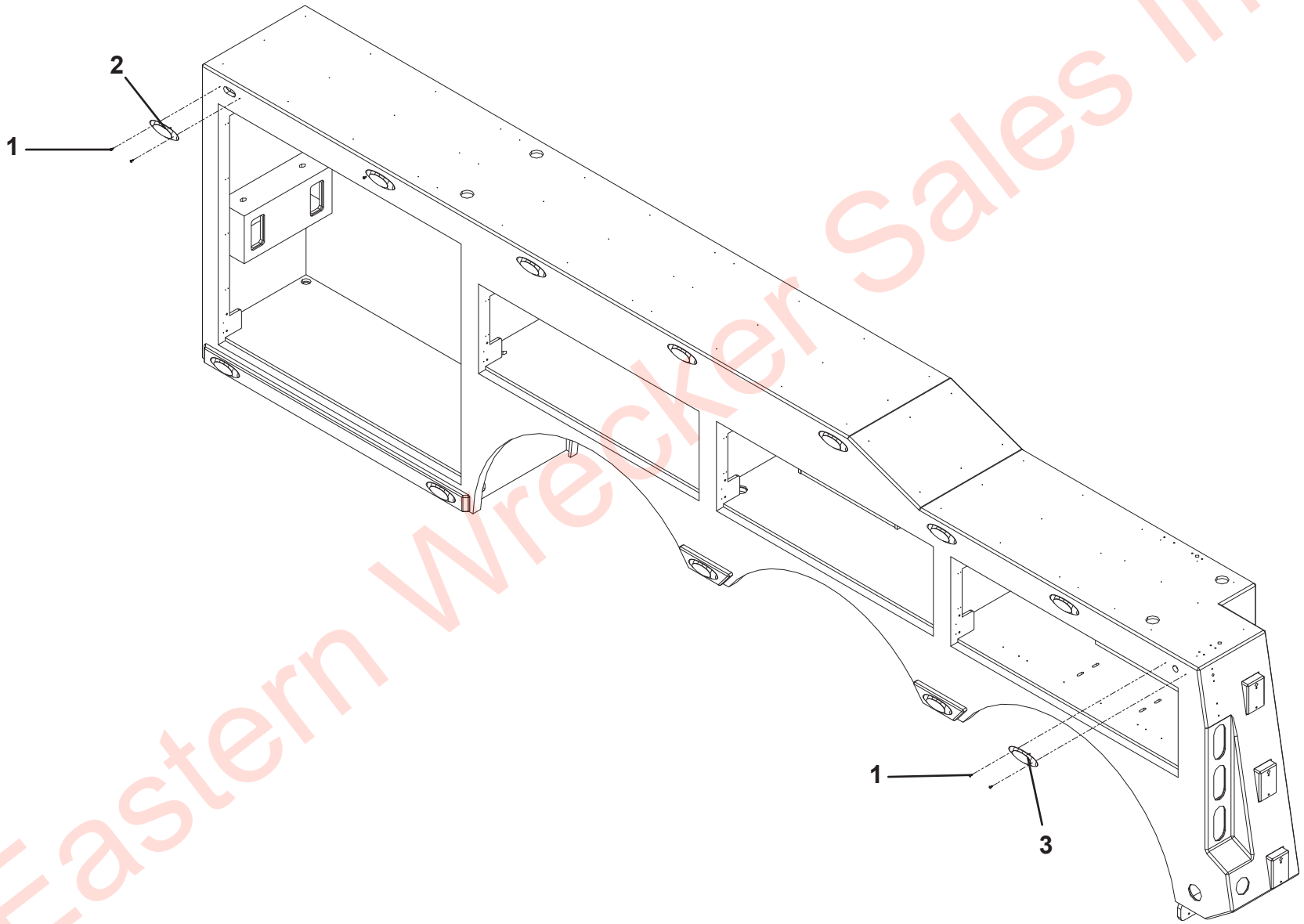

Eastern Wrecker Sales Inc

COMPARTMENT LIGHT INSTALLATION

ITEM	PART NO.	DESCRIPTION	QTY	REV
	1001206680	Compartment Light Installation	Ref	A
1	1001154527	Lamp, 40”	8	
2	1001166549	Lamp, 12”	8	
3	1001196552	Screw, #8 x 0.75”	96	
4	1001199081	Mount	48	

Eastern Wrecker Sales Inc

COMPARTMENT LIGHT INSTALLATION

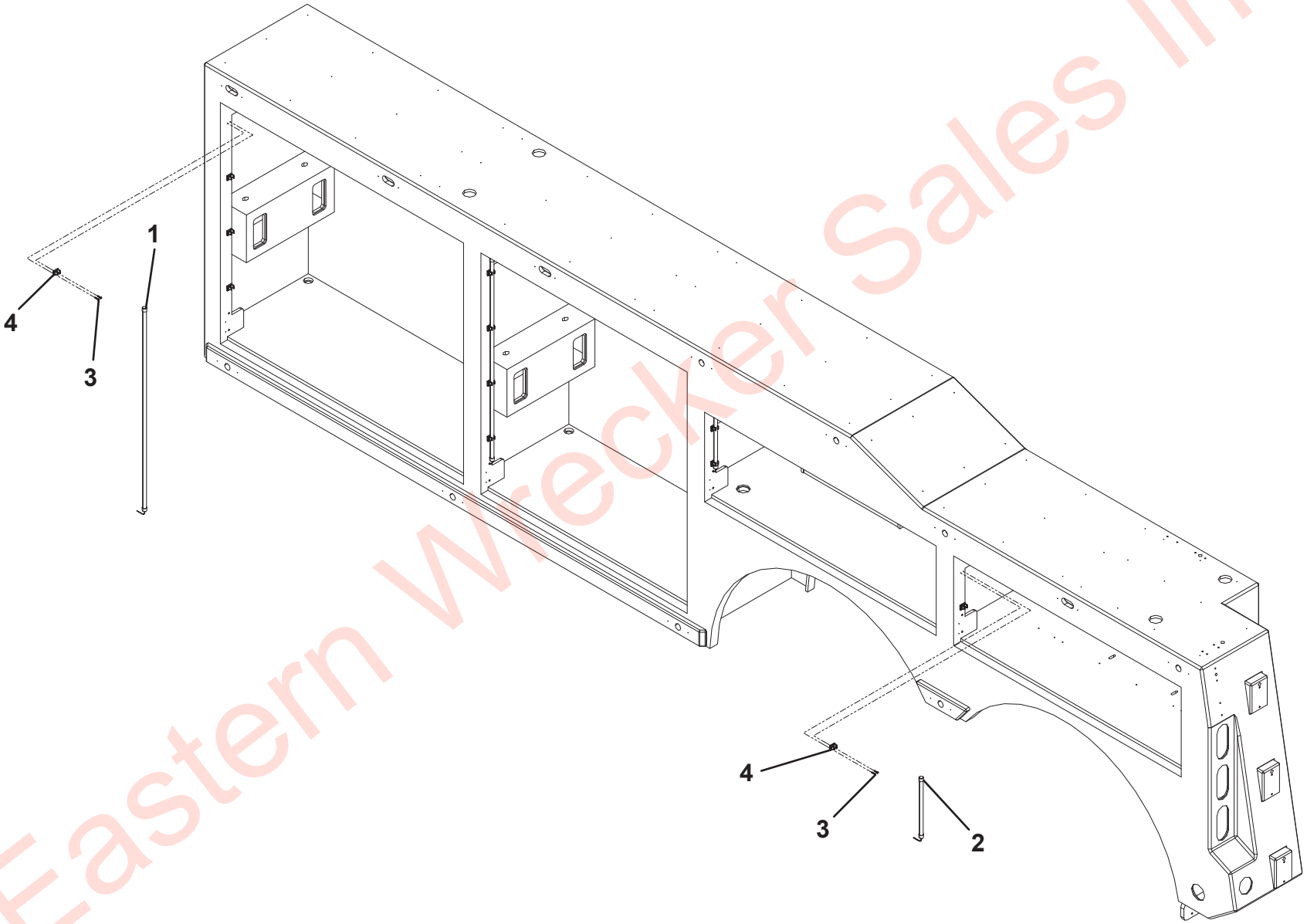

Eastern Wrecker Sales Inc

COMPARTMENT LIGHT INSTALLATION - TRI-AXLE

ITEM	PART NO.	DESCRIPTION	QTY	REV
	1001206681	Compartment Light Installation - Tri-Axle	Ref	A
1	1001154527	Lamp, 40”	4	
2	1001166549	Lamp, 12”	12	
3	1001196552	Screw, #8 x 0.75”	80	
4	1001199081	Mount	40	

Eastern Wrecker Sales Inc

COMPARTMENT LIGHT INSTALLATION - TRI-AXLE

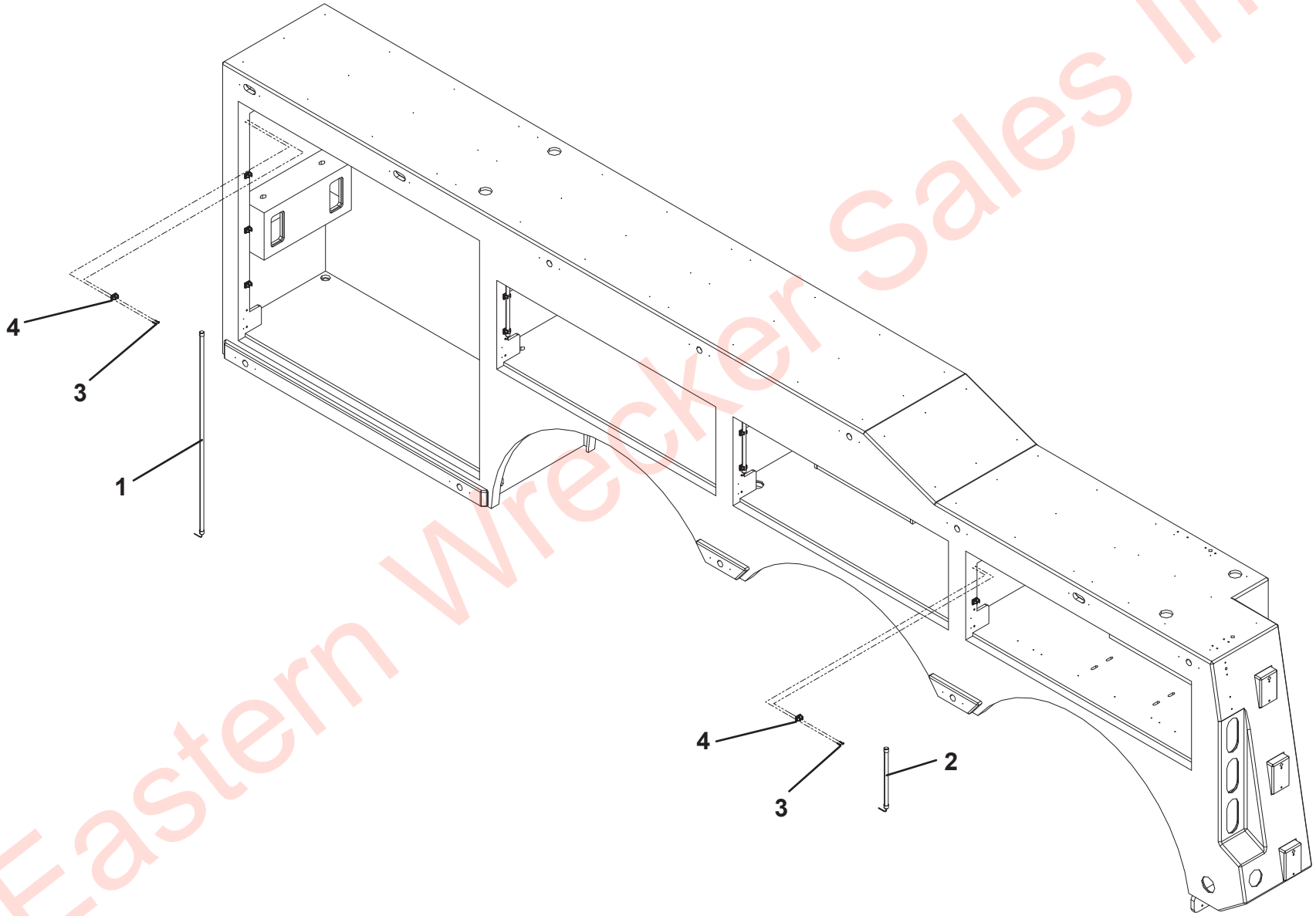

Eastern Wrecker Sales Inc

WING LIGHT BRACKET INSTALLATION

ITEM	PART NO.	DESCRIPTION	QTY	REV
	1001228841	Wing Light Bracket Installation	Ref	A
1	1001213104	Mount, RH	1	
2	1001213105	Mount, LH	1	
3	1001213110	Plate	2	
4	1001214129	Plate	4	
5	0641610	Capscrew, 0.38” - 16NC x 1.25”	4	
6	4751600	Washer, 0.38” ID	8	
7	3271605	Nut, 0.38” - 16NC	4	
8	7114150618	Screw, 0.31” - 18NC x 0.75”	8	
9	7661000029	Nut, 0.31” - 18NC	8	

Eastern Wrecker Sales Inc

WING LIGHT BRACKET INSTALLATION

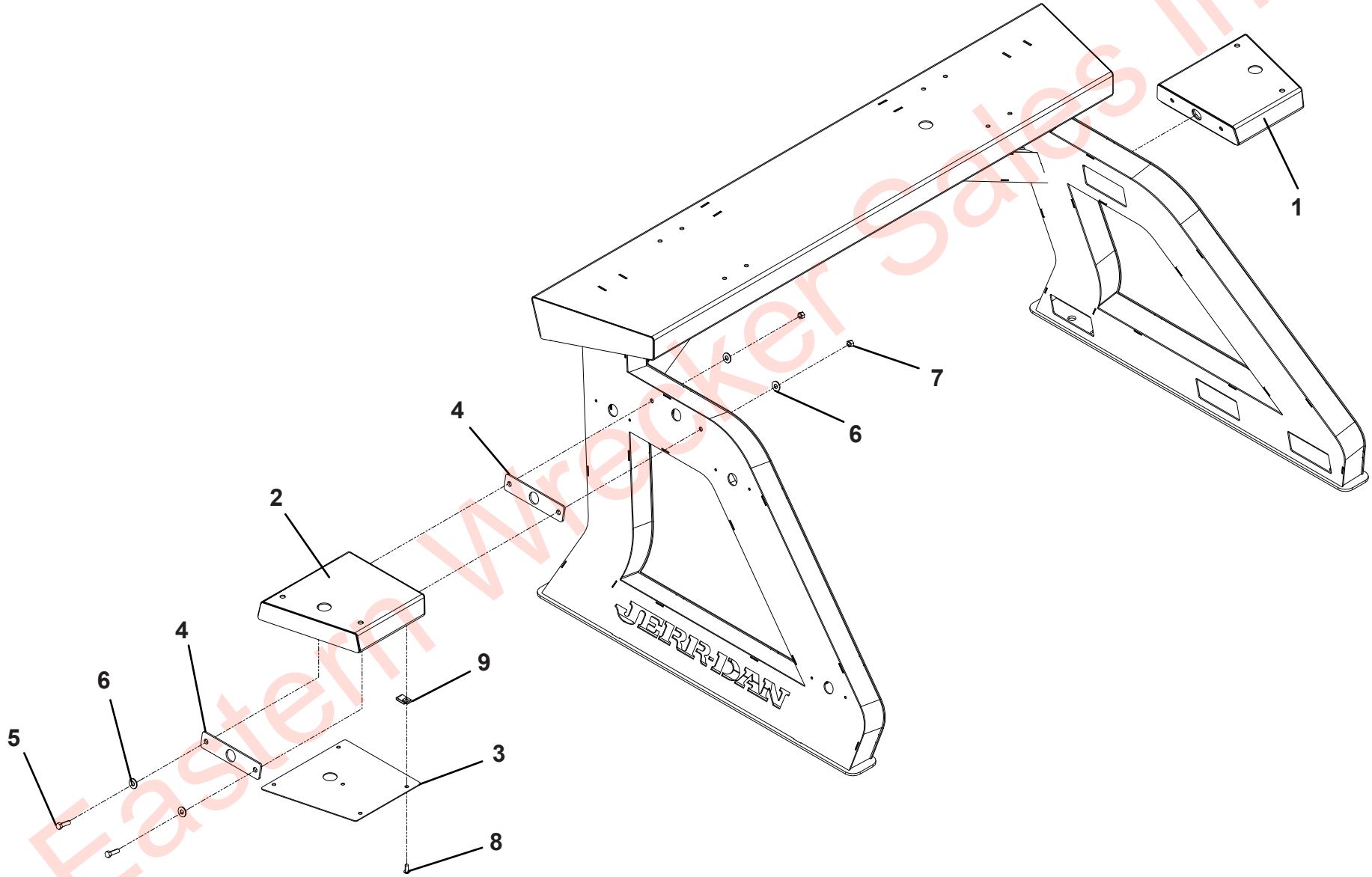

Eastern Wrecker Sales Inc

WING LIGHT INSTALLATION

ITEM	PART NO.	DESCRIPTION	QTY	REV
	1001228842	Wing Light Installation	Ref	A
1	1001133591	Light, Amber CD3 (See Separate Breakdown in this Section)	2	
	1001129861	Light, Amber Whelen (See Separate Breakdown in this Section)	2	
2	7493000011	Grommet	2	
3	0641810	Capscrew, 0.50” - 13NC x 1.25”	4	
4	4711800	Washer, 0.50” ID	4	
5	7660182601	Locknut, 0.50” - 13NC	4	
6	4178000402	Bracket	4	

Eastern Wrecker Sales Inc

WING LIGHT INSTALLATION

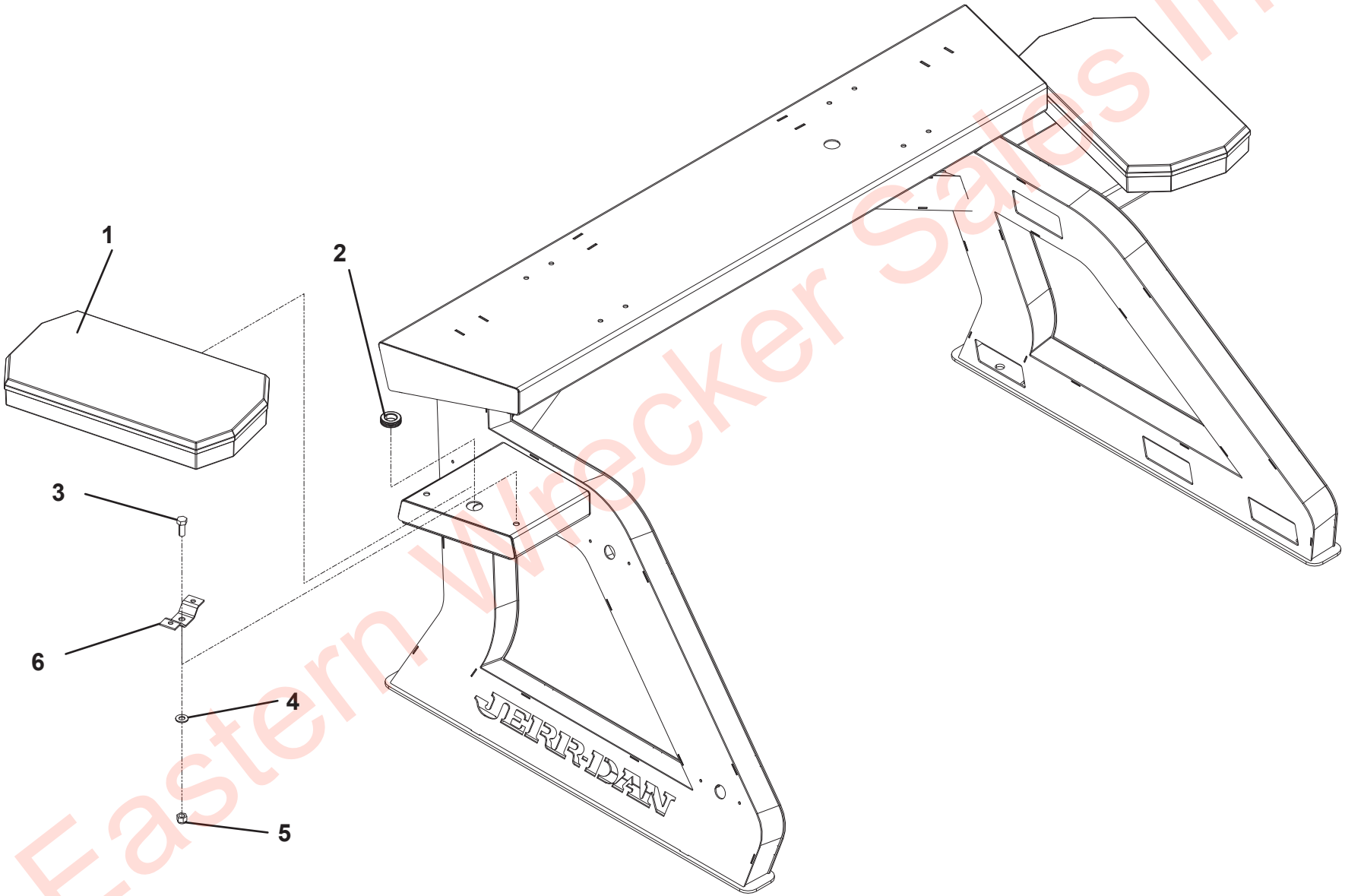

Eastern Wrecker Sales Inc

22” PUBLIC SAFETY LIGHT BAR - 1001133591

ITEM	PART NO.	DESCRIPTION	QTY	REV
	1001133591	22’’ Public Safety Light Bar	Ref	B
1	70051014	LED Corner Module & Bracket	2	
2	70051015	Lens, Clear Upper (Not Shown)	1	
3	70051016	Cable, Jerr-Dan 2 Wire (Not Shown)	1	
4	9346310098	Flasher	1	
5	70051017	Lens, Clear Lower	1	
6	9590310201	LED Center Modulew	2	
7	70051018	Bracket, Mounting	1	

Eastern Wrecker Sales Inc

22” PUBLIC SAFETY LIGHT BAR - 1001133591

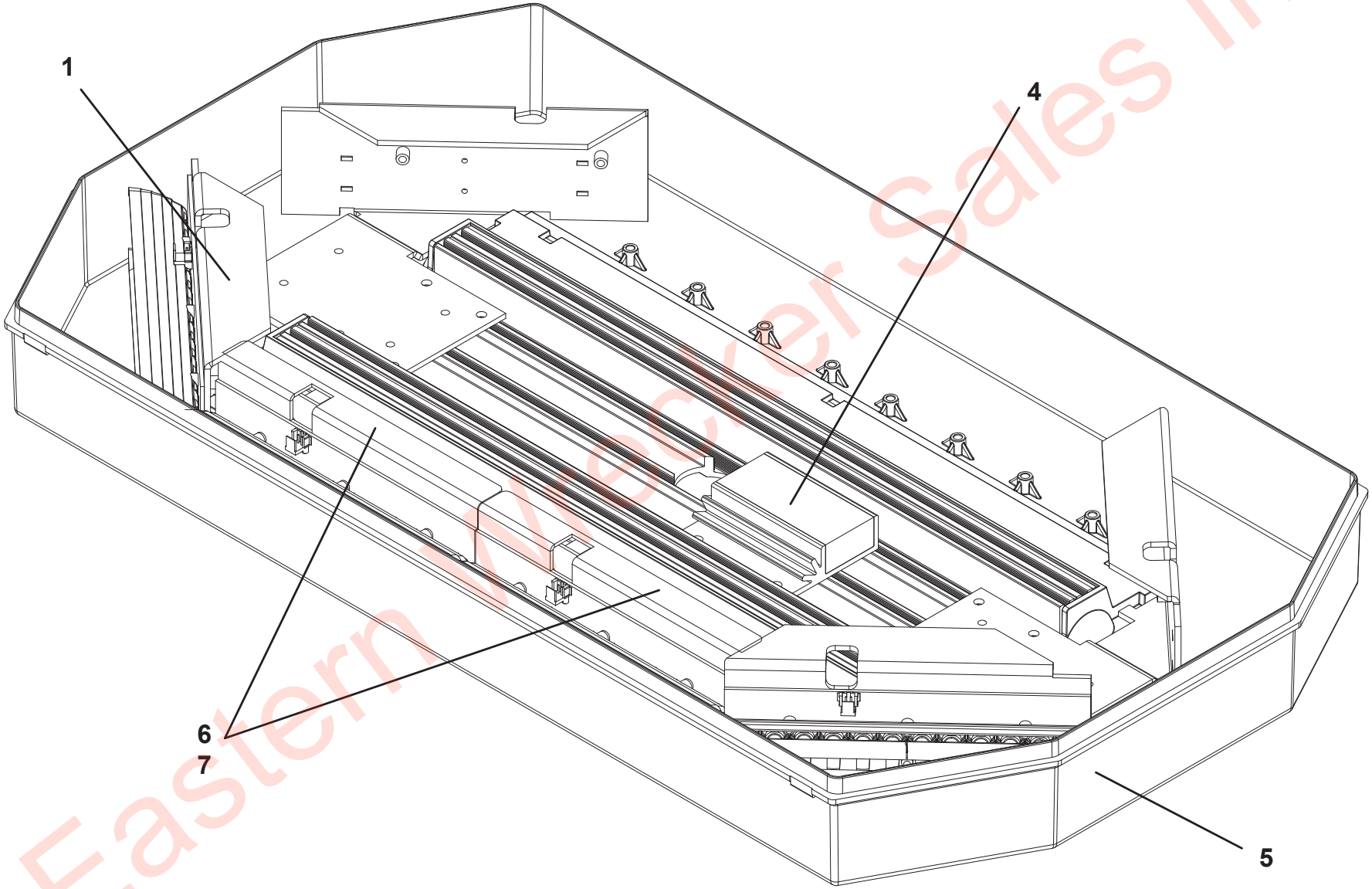

Eastern Wrecker Sales Inc

22” WHELEN LIGHT BAR - 1001199478

ITEM	PART NO.	DESCRIPTION	QTY	REV
	1001199478	22” Whelen Light Bar	Ref	B
1	70051019	Base	1	
2	70050169	Grommet	1	
3	70051020	Screw, 10-24NC X 0.88"	1	
4	70051021	Bracket, Bulkhead Lens Mount	2	
5	70051022	Bracket, I/O Anchor	1	
6	70051023	Assembly, I/O BD Mini	1	
7	70051024	Assembly, Cable	1	
8	70051025	Clamp, Cable	1	
9	70050174	Nut, Wiz 10-24NC	1	
10	70051026	Ty Wrap, 6" Black	AR	
11	70051027	Bracket, End Clamp	2	
12	70051028	Screw, 6-32NC X 0.50"	10	
13	70051029	Assy, Corner L-Front/R-Rear Amber	1	
14	70051030	Assy, Corner L-Rear/R-Front Amber	1	
15	70051031	Assy, Corner L-Front/R-Rear Blue	1	
16	70051032	Assy, Corner L-Rear/R-Front Blue	1	
17	70051033	Assembly, Blank Rear Drvr Corner	1	
18	70051034	Assembly, Blank Rear Pass Corner	1	
19	70051035	Bracket, Corner Clamp	4	
20	70051036	Bracket, Half Filler	2	
21	70051037	Sub Assy, Short Directional Amber	2	
22	70051038	Sub Assy, Short Directional Blue	2	
23	70051039	Bracket, Filler	2	
24	70051040	Assembly, Harness	1	
25	70051041	Assembly, Harness	1	
26	70051042	Assembly, Harness	1	
27	70051043	Assembly, Harness	1	
28	70051044	Bracket, Snap-In	4	
29	70051045	Ty Wrap, 3" Black	AR	
30	70051046	Sub Assy, Cut Dome Clear	2	
31	70051047	Sub Assy, Cut Dome Blue	2	
32	70051048	Seal, Lens Divider	2	
33	70051049	Divider, Lens	1	
34	70051050	Screw, 10-24NC X 1.25"	4	
36	70051051	Tape, VHB Endcap Trim Mount	4	
37	70051052	Cover, Top Extruded 7.325"	2	

Eastern Wrecker Sales Inc

22” WHELEN LIGHT BAR - 1001199478

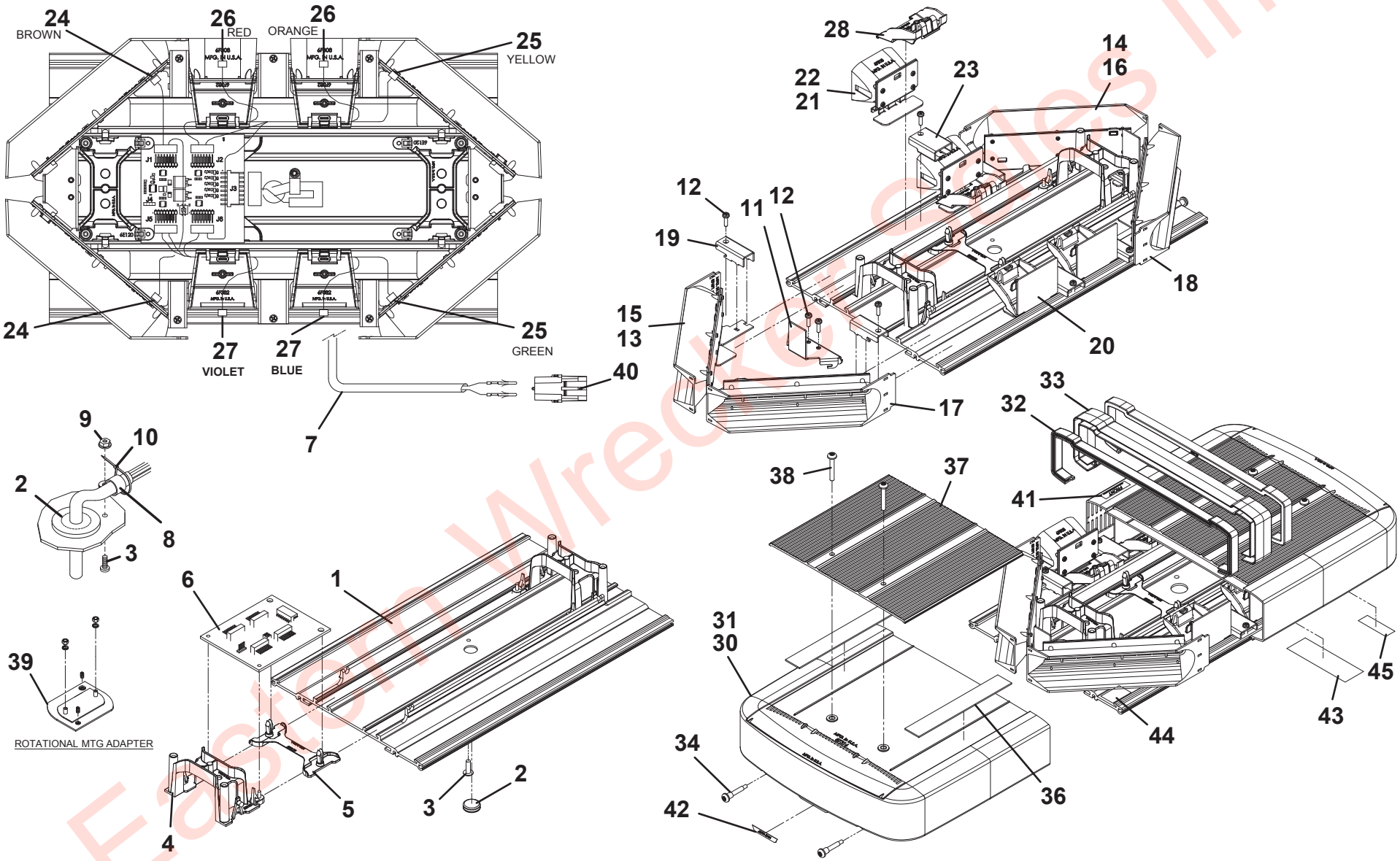

Eastern Wrecker Sales Inc

SWITCH PANEL INSTALLATION

ITEM	PART NO.	DESCRIPTION	QTY	REV
	1001236616	Switch Panel Installation	Ref	A
1	1001166978	Washer, 0.25” ID	4	
2	1001195257	Screw, 0.25” x 0.50”	20	
3	7660142601	Locknut, 0.25” - 20NC	4	
4	1001211000	Multiplex	1	
5	1001211001	Key Pad in Cab	1	
6	1001211002	Key Pad in Body	2	
7	1001211003	Key Pad, Winch	2	
8	1001209590	Screw, 0.25” X 1.00”	4	
9	1001209616	Nut,	16	
10	7280000006	Clip	20	
11	7950140143	Flatwasher, 0.25” ID	24	
12	1001208950	Harness, Left Multiplex Jumper	1	
13	1001208951	Harness, Left Multiplex Body	1	
14	1001208952	Harness, Multiplex to PDP	1	
15	1001215098	Harness, Multiplex Crossover	1	
16	1001215100	Harness, Right Multiplex Body	1	
17	5526000553	Tie Strap	25	
18	1001209034	Harness, Winch	1	

Eastern Wrecker Sales Inc

SWITCH PANEL INSTALLATION

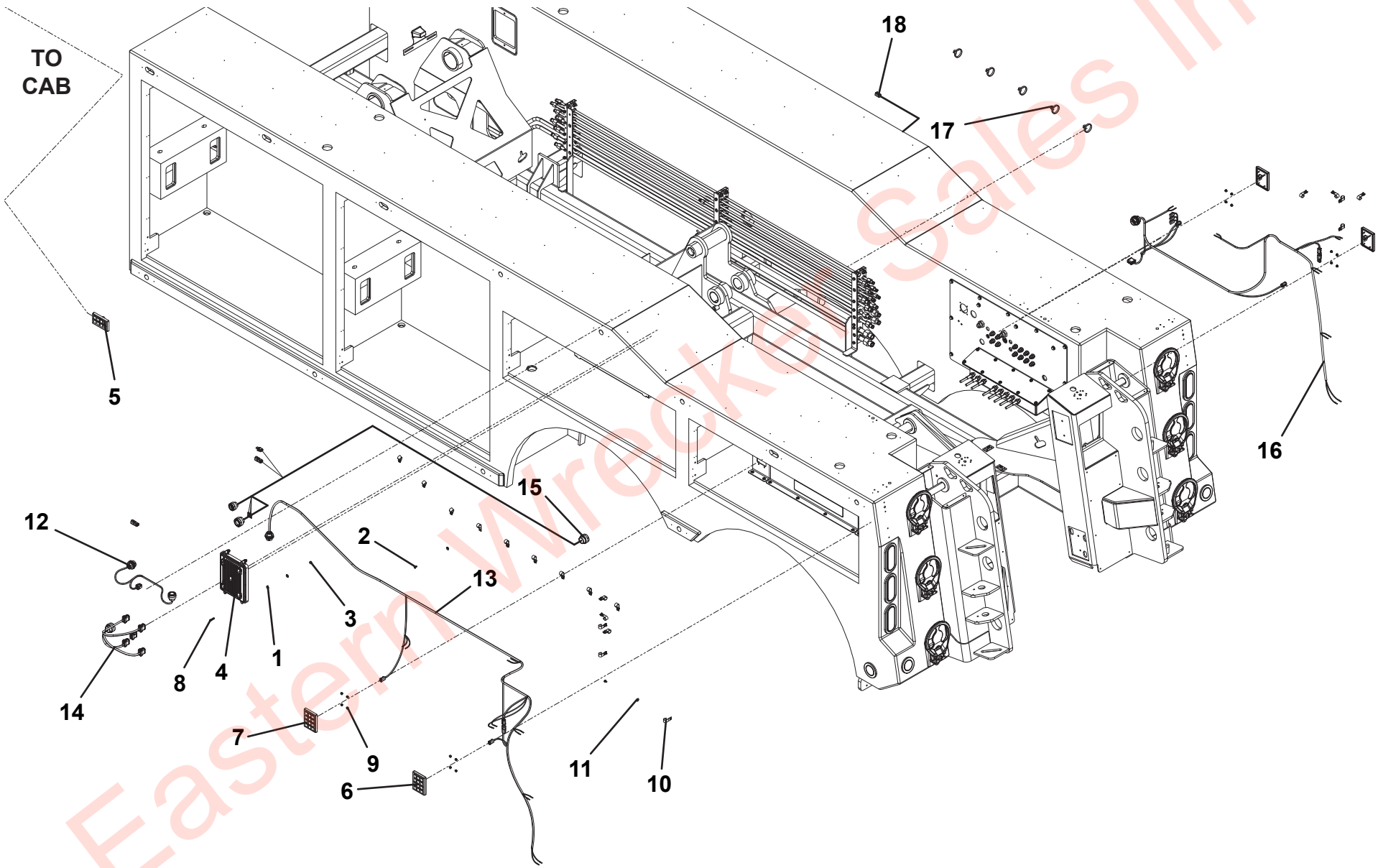

Eastern Wrecker Sales Inc

THIS PAGE INTENTIONALLY LEFT BLANK

Eastern Wrecker Sales Inc

SECTION 8 - DECAL

Eastern Wrecker Sales Inc

DECAL INSTALLATION

ITEM	PART NO.	DESCRIPTION	QTY	REV
	1001210733	Decal Installation	Ref	C
1	1001127220	Decal, Tag	1	
2	1001132328	Decal, Placard	1	
3	1001132346	Patent	1	
4	1001136075	Decal, Hazardous Voltage	1	
5	1001136080	Decal, Recover Stability	2	
6	1001136091	Decal, Towed Load	2	
7	1001136094	Decal, Crushing Hazard	2	
8	1001136103	Decal, Electrocution	4	
9	1001136119	Decal, Hydraulic Hazard	1	
10	1001137169	Decal, Pinch	2	
11	1001138537	Decal, Hook	2	
12	1001138612	Decal, Battery	1	
13	1001141227	Decal, Backing	1	
14	1001142452	Decal, No Step	2	
15	1001142828	Decal, Fall Hazard	1	
16	1001174339	Decal, Spade Housing Step	4	
17	1001174346	Decal, Spade Step	4	
18	1001205331	Decal, Lube Chart	1	
19	1001206364	Decal, JFB Badge	2	
20	1001206367	Decal, Jerr-Dan Name Plate	2	
21	1001212286	Decal, Power Distribution	1	
22	7330000143	Decal, Made in USA	1	
23	7330000208	Decal, Service Air	1	
24	7330000209	Decal, Supply Air	1	
25	7330000210	Decal, Aux Air	1	
26	7330000689	Decal', NTEA	1	
27	7759000004	Pop Rivet	14	

Eastern Wrecker Sales Inc

DECAL INSTALLATION

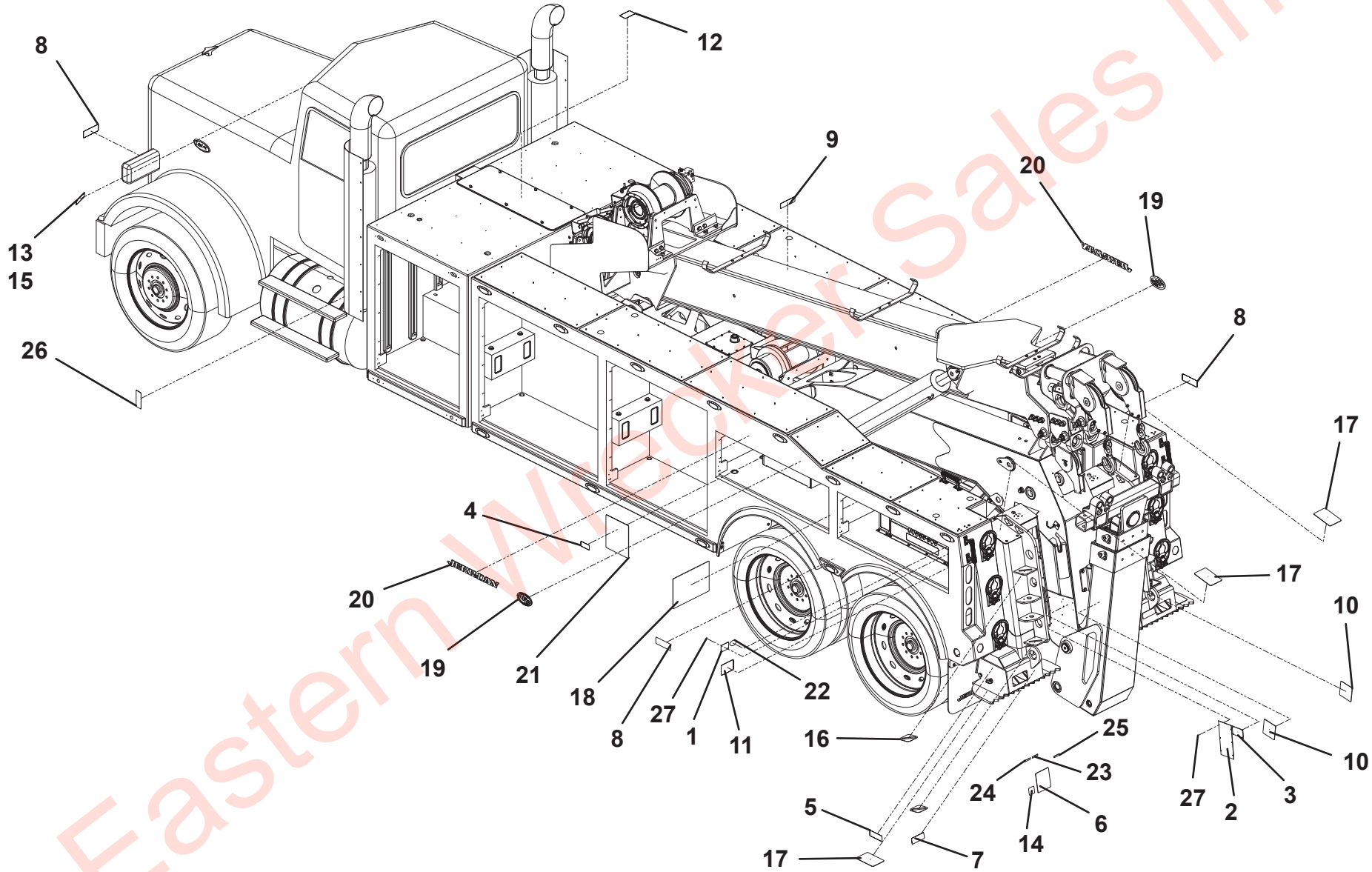

Eastern Wrecker Sales Inc

WRECKER BOOM DECAL INSTALLATION 3 PIECE

ITEM	PART NO.	DESCRIPTION	QTY	REV
	3517290007	Wrecker Boom Decal Installation 3 Piece	Ref	A
1	7330000446	Decal, Boom Rating 17.5 Ton	2	
2	7330000447	Decal, Boom Rating 28 Ton	2	
3	7330000448	Decal, Boom Rating 39 Ton	2	
4	7330000449	Decal, Boom Rating 50 Ton	2	
5	7330000450	Decal, Boom Rating 12 Ton	2	
6	7330000451	Decal, Boom Rating 14 Ton	2	
7	7330000452	Decal, Boom Rating 16 Ton	2	
8	7330000453	Decal, Arrow	4	
9	7330000466	Decal, Boom Rating 45 Ton	2	

Eastern Wrecker Sales Inc

WRECKER BOOM DECAL INSTALLATION 3 PIECE

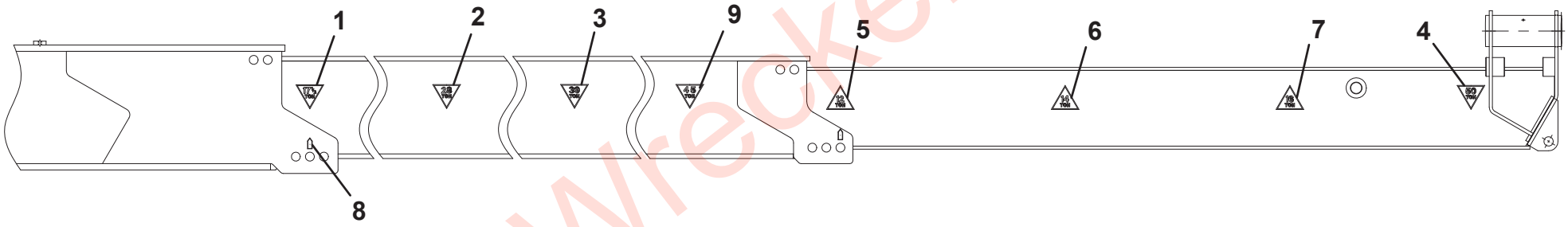

Eastern Wrecker Sales Inc

WRECKER BOOM DECAL INSTALLATION 2 PIECE

ITEM	PART NO.	DESCRIPTION	QTY	REV
	3517290006	Wrecker Boom Decal Installation 2 Piece	Ref	A
1	7330000446	Decal, Boom Rating 17.5 Ton	2	
2	7330000447	Decal, Boom Rating 28 Ton	2	
3	7330000448	Decal, Boom Rating 39 Ton	2	
4	7330000449	Decal, Boom Rating 50 Ton	2	
5	7330000453	Decal, Arrow	2	

Eastern Wrecker Sales Inc

WRECKER BOOM DECAL INSTALLATION 2 PIECE

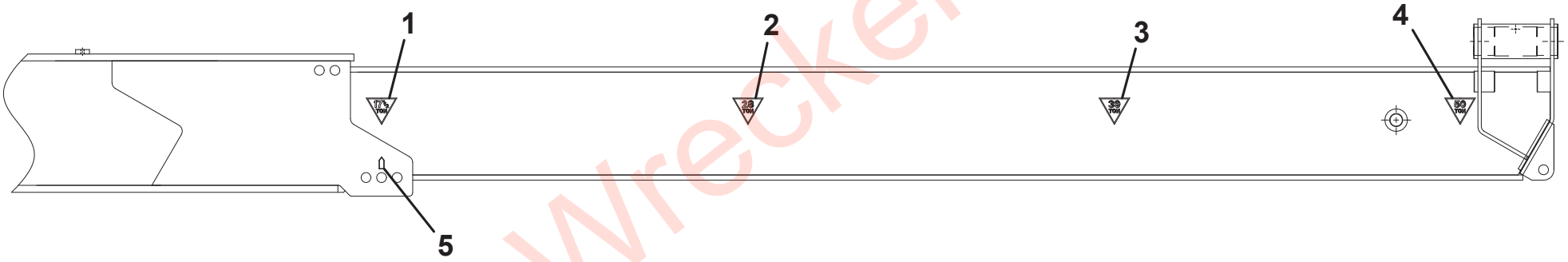

Eastern Wrecker Sales Inc

THIS PAGE INTENTIONALLY LEFT BLANK

Eastern Wrecker Sales Inc

SECTION 9 - ACCESSORIES

Eastern Wrecker Sales Inc

TOOL DRAWER INSTALLATION - TANDEM

ITEM	PART NO.	DESCRIPTION	QTY	REV
	1001195256	Tool Drawer Installation - Tandem	Ref	A
1	1001194676	Screw, 0.25” x 0.75”	6	
2	1001195257	Screw, 0.25” x 0.50”	8	
3	1001195279	Pad	1	
4	1001190410	ToolBox	1	

Eastern Wrecker Sales Inc

TOOL DRAWER INSTALLATION - TANDEM

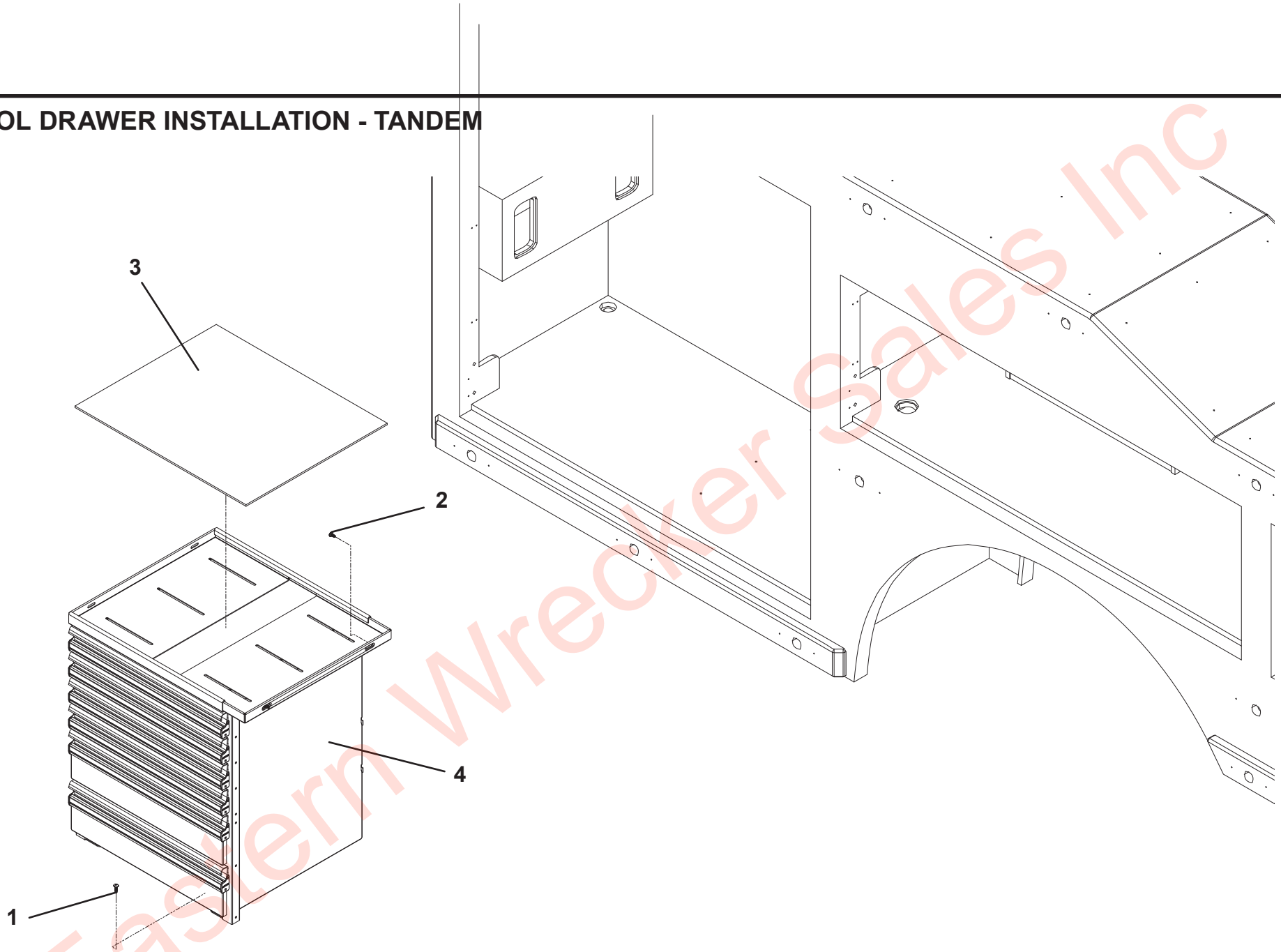

Eastern Wrecker Sales Inc

TOOL DRAWER INSTALLATION - TRI-AXLE

ITEM	PART NO.	DESCRIPTION	QTY	REV
	1001208635	Tool Drawer Installation - Tri-Axle	Ref	B
1	1001194676	Screw, 0.25” x 0.75”	6	
2	1001195257	Screw, 0.25” x 0.50”	4	
3	1001195341	Pad	1	
4	7114140818	Capscrew, 0.25” - 20NC x 1.00”	2	
5	7950160143	Flatwasher, 0.38” ID	2	
6	1001183037	Nut, 0.25” - 20NC	2	
7	1001190410	ToolBox	1	

Eastern Wrecker Sales Inc

TOOL DRAWER INSTALLATION - TRI-AXLE

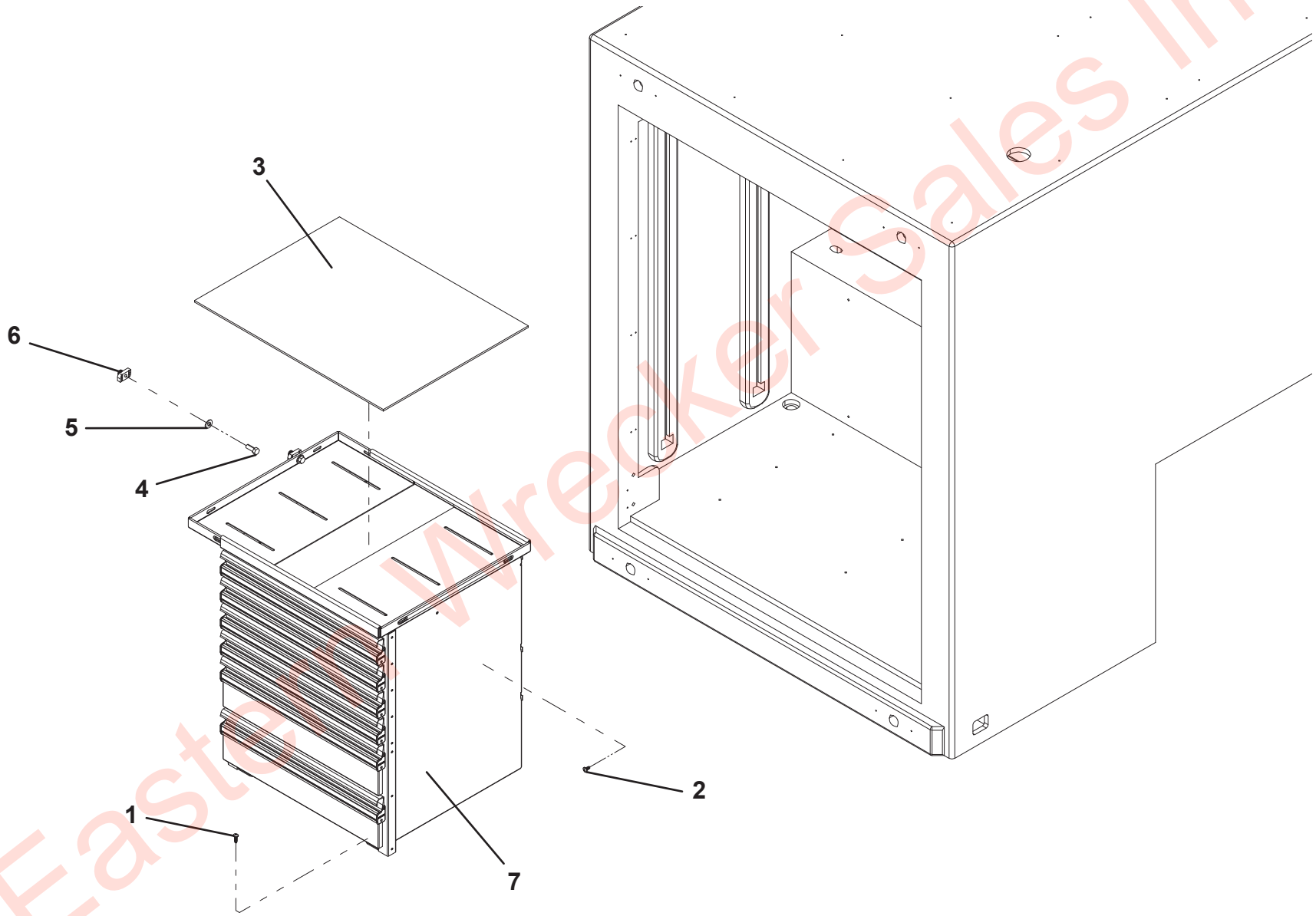

Eastern Wrecker Sales Inc

UNDERLIFT TOOLS - 5TH WHEEL INSTALLATION

ITEM	PART NO.	DESCRIPTION	QTY	REV
	2503880033	Underlift Tools - 5th Wheel Installation	Ref	C
1	3178000240	Bracket	1	
2	3178000499	Bracket	1	
3	3706000080	Plate	1	
4	3691000144	Pin	1	
5	3691000144	Pin	1	
6	7118267250	Capscrew, 1.00” - 8UNC x 9.00”	2	
7	7120000036	Capscrew, 0.75” - 10UNC x 3.25”	2	
8	7691000025	Pin	2	

Eastern Wrecker Sales Inc

UNDERLIFT TOOLS - 5TH WHEEL INSTALLATION

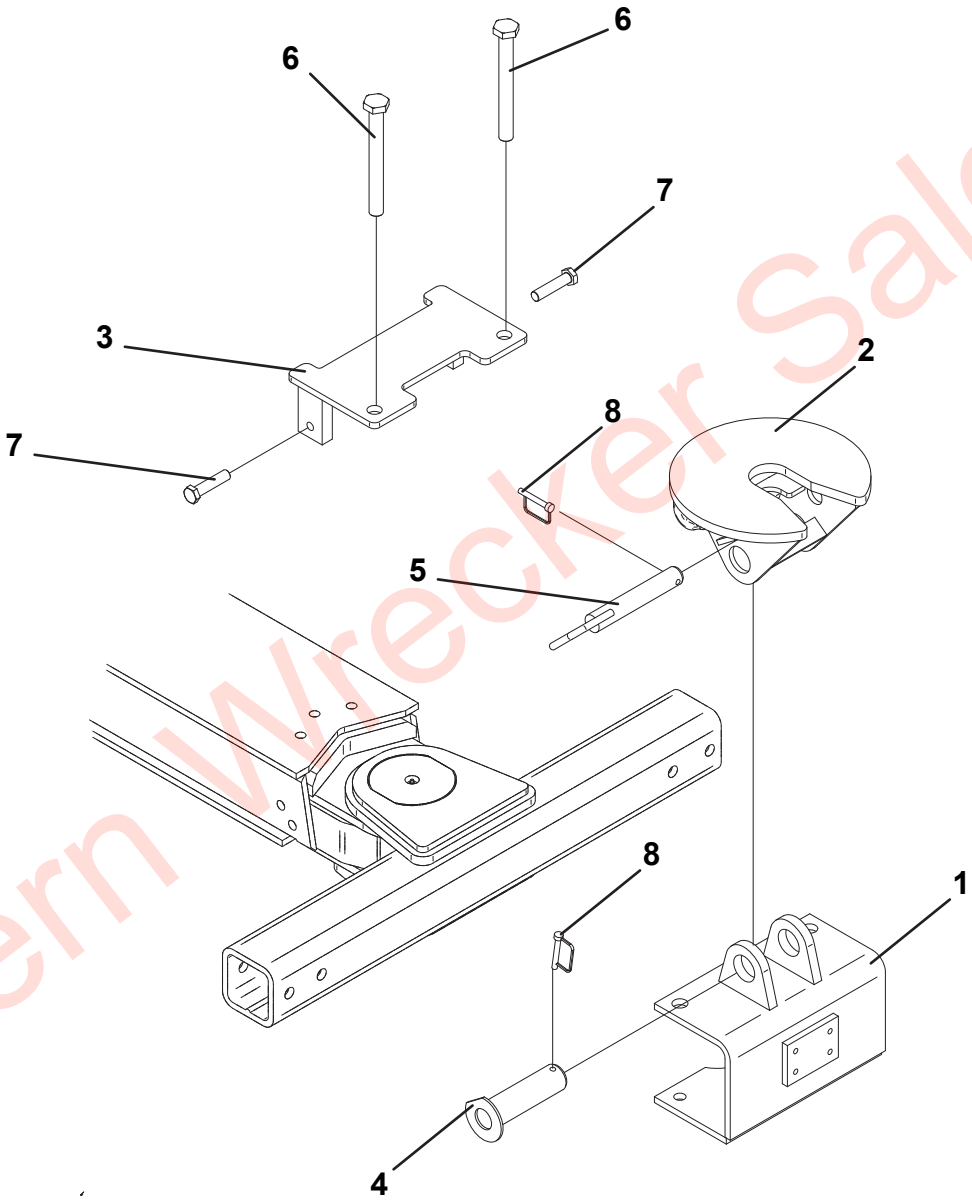

Eastern Wrecker Sales Inc

UNDERLIFT TOOLS - FRAME FORKS

ITEM	PART NO.	DESCRIPTION	QTY	REV
	2503870011	Underlift Tools - Frame Forks	Ref	G
1	3007000004	Chain Hook Adapter	2	
2	7007000056	Frame Fork Adapter, RH	1	
3	7007000055	Frame Fork Adapter, LH	1	
4	3178000226	Spring Lift Bracket	2	
5	7454000006	Fork, 3.00” Short	2	
6	7454000005	Fork, 3.00” Medium	2	
7	7454000003	Fork, 4.50” Medium	2	
8	7454000004	Fork, 4.50” Long	2	
9	3551000036	T-Handle	2	
10	7691000022	Pin	2	
11	7691000021	Pin	2	
12	1001159568	Strap (Not Shown)	1	
13	1001198300	Pin	2	

Eastern Wrecker Sales Inc

UNDERLIFT TOOLS - FRAME FORKS

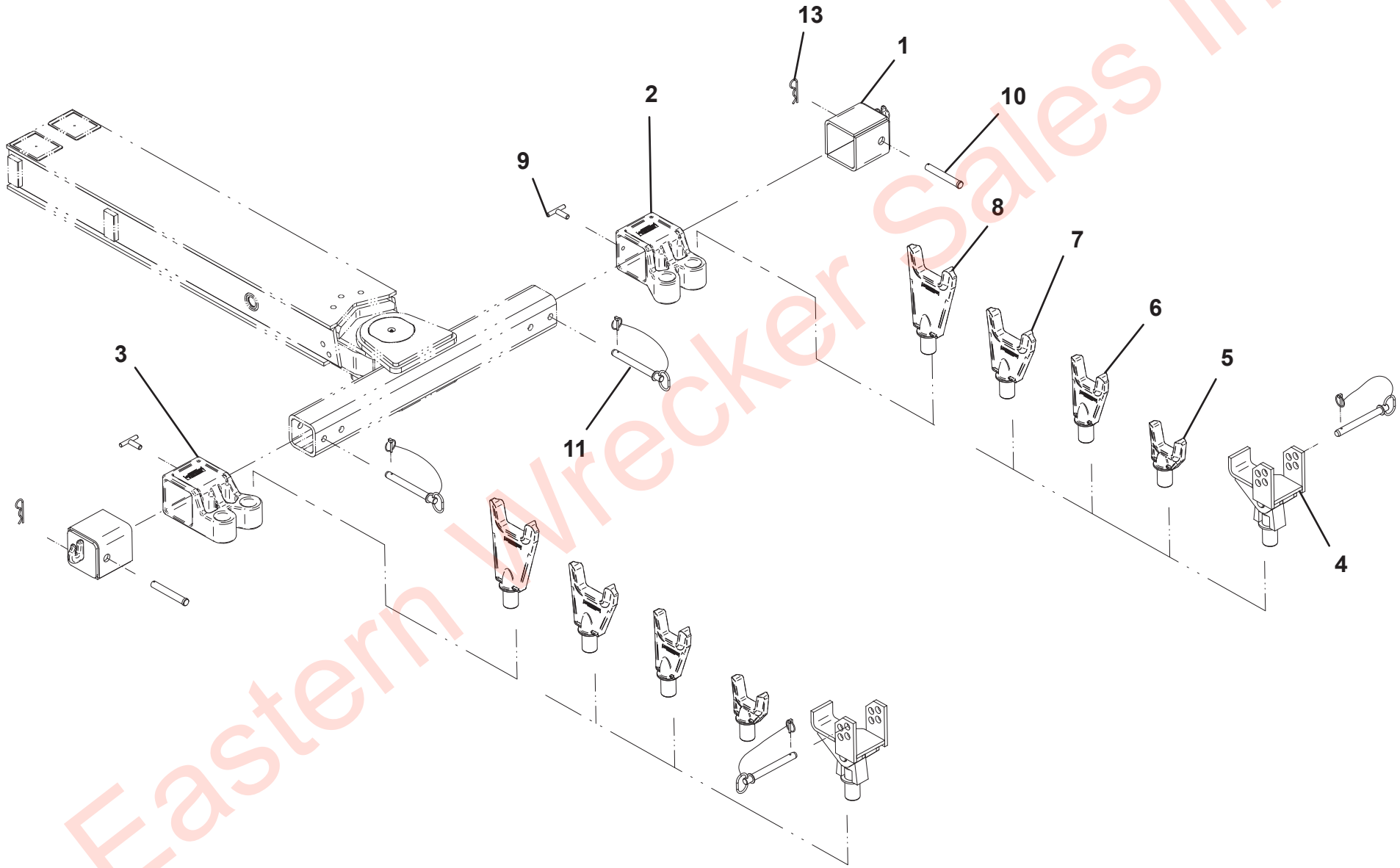

Eastern Wrecker Sales Inc

UNDERLIFT TOOLS - 14,000 LB TIRE LIFT

ITEM	PART NO.	DESCRIPTION	QTY	REV
	2503880088	Underlift Tools - 14,000 Lb Tire Lift	Ref	C
1	3484000048	Tire Lift Grid - RH	1	
2	3484000049	Tire Lift Grid - LH	1	
3	3020000120	Tire Lift Arm Weldment - RH	1	
4	3020000119	Tire Lift Arm Weldment - LH	1	
5	3912000038	Tire Lift Tube Weldment	2	
6	3561000008	Hook	4	
7	4561000012	Pull Hook	1	
8	7894000037	Strap	2	
9	7894000028	Rachet Strap	4	
10	7691000026	Hitch Pin	2	
11	4691000274	Pin	4	
12	7691000020	Hairpin	4	
13	7330000278	Decal, Caution	2	
14	1001132268	Decal, Rating	2	
15	7759000004	Pop Rivet	8	

Eastern Wrecker Sales Inc

UNDERLIFT TOOLS - 14,000 LB TIRE LIFT

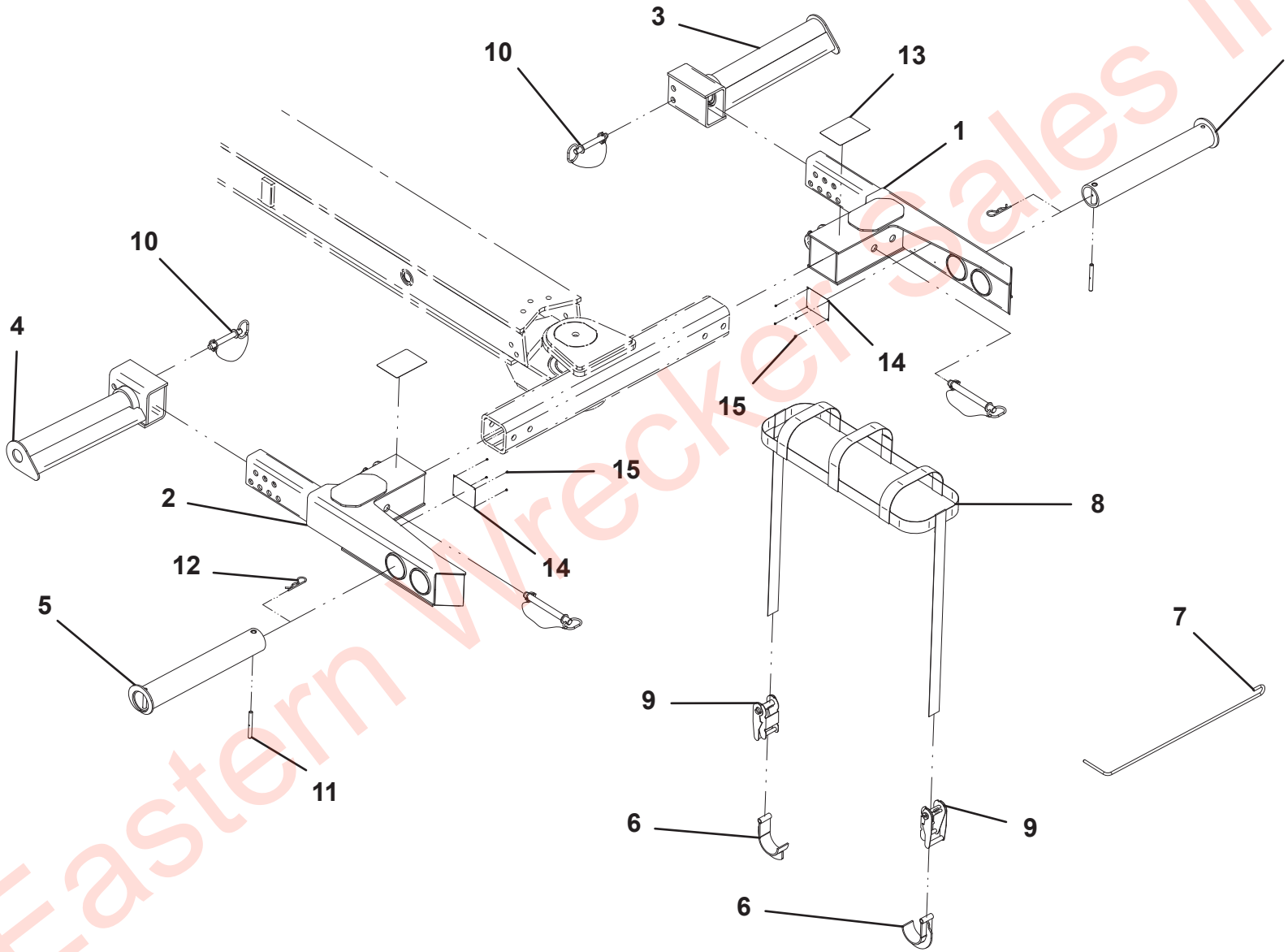

Eastern Wrecker Sales Inc

UNDERLIFT TOOLS - 25,000 LB TIRE LIFT

ITEM	PART NO.	DESCRIPTION	QTY	REV
	2502880300	Underlift Tools - 25,000 Lb Tire Lift	Ref	C
1	3484000072	Tire Lift Grid - LH	1	
2	3484000073	Tire Lift Grid - RH	1	
3	3020000119	Tire Lift Arm Weldment - LH	1	
4	3020000120	Tire Lift Arm Weldment - RH	1	
5	3912000033	Tire Lift Tube Weldment	2	
6	7691000026	Hitch Pin	2	
7	4691000274	Pin	4	
8	7691000020	Hairpin	4	
9	7330000278	Decal, Caution	2	
10	1001132265	Decal, Rating	2	
11	7759000004	Pop Rivet	8	
12	4561000012	Pull Hook	1	
13	7577000368	Strap	1	
14	3912000038	Tube Weldment	2	
15	3561000008	Hook	4	
16	7894000037	Strap	2	
17	7894000028	Rachet Strap	4	

Eastern Wrecker Sales Inc

UNDERLIFT TOOLS - 25,000 LB TIRE LIFT

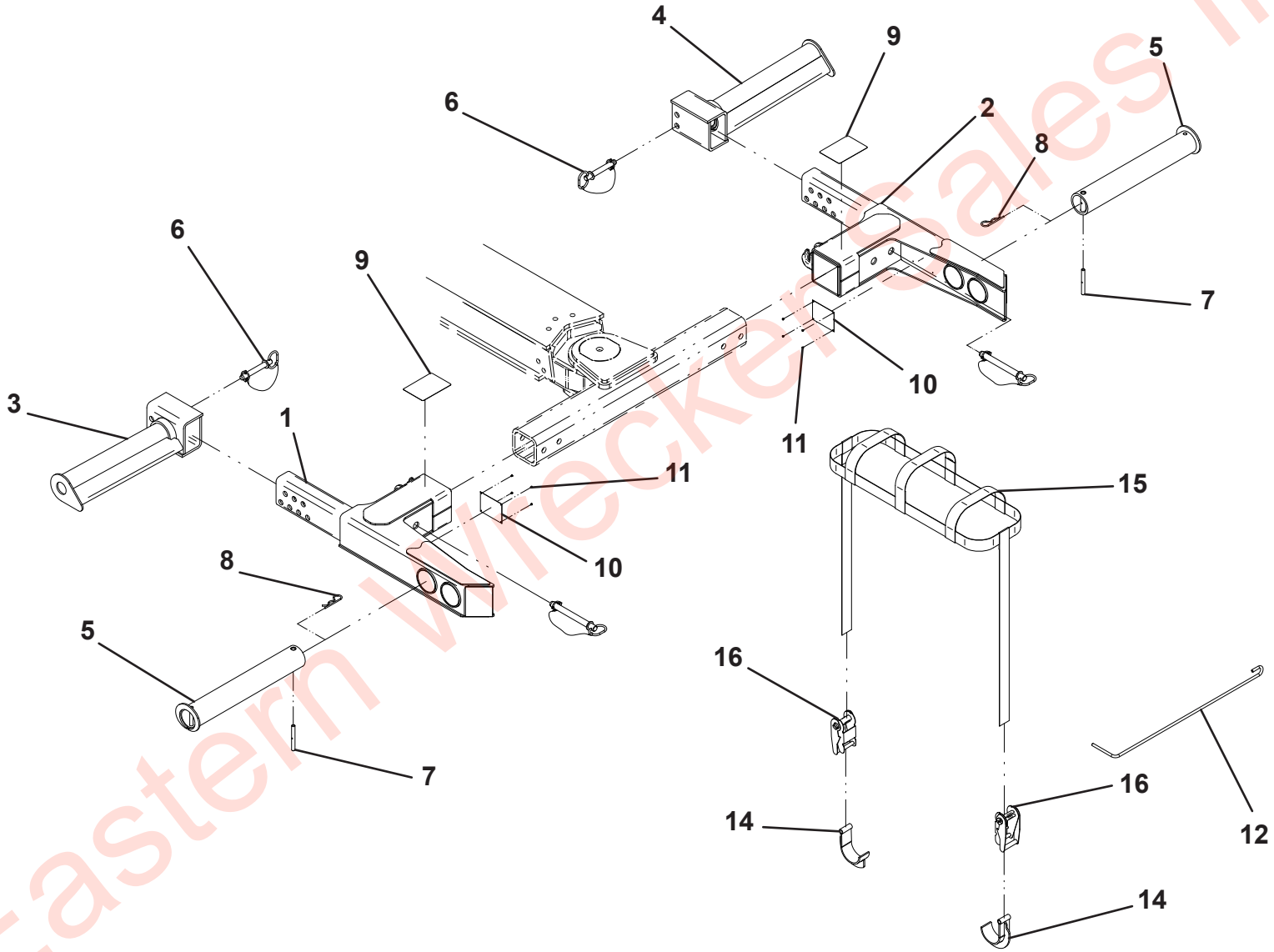

Eastern Wrecker Sales Inc

UNDERLIFT TOOLS - PINTLE HOOK

ITEM	PART NO.	DESCRIPTION	QTY	REV
	2503880043	Underlift Tools - Pintle Hook	Ref	A
1	7561000020	Hitch, Pintle Hook with 2” Dia. Ball	1	
2	7118181250	Capscrew, 0.50”-13NC x 1.50”	4	
3	7950180000	Lockwasher, 0.50” ID	4	
4	7056000003	Ball, 1.88” Dia	1	
	7056000004	Ball, 2.00” Dia		
	7056000005	Ball, 2.31” Dia		
	7056000006	Ball, 50mm Dia		

Eastern Wrecker Sales Inc

UNDERLIFT TOOLS - PINTLE HOOK

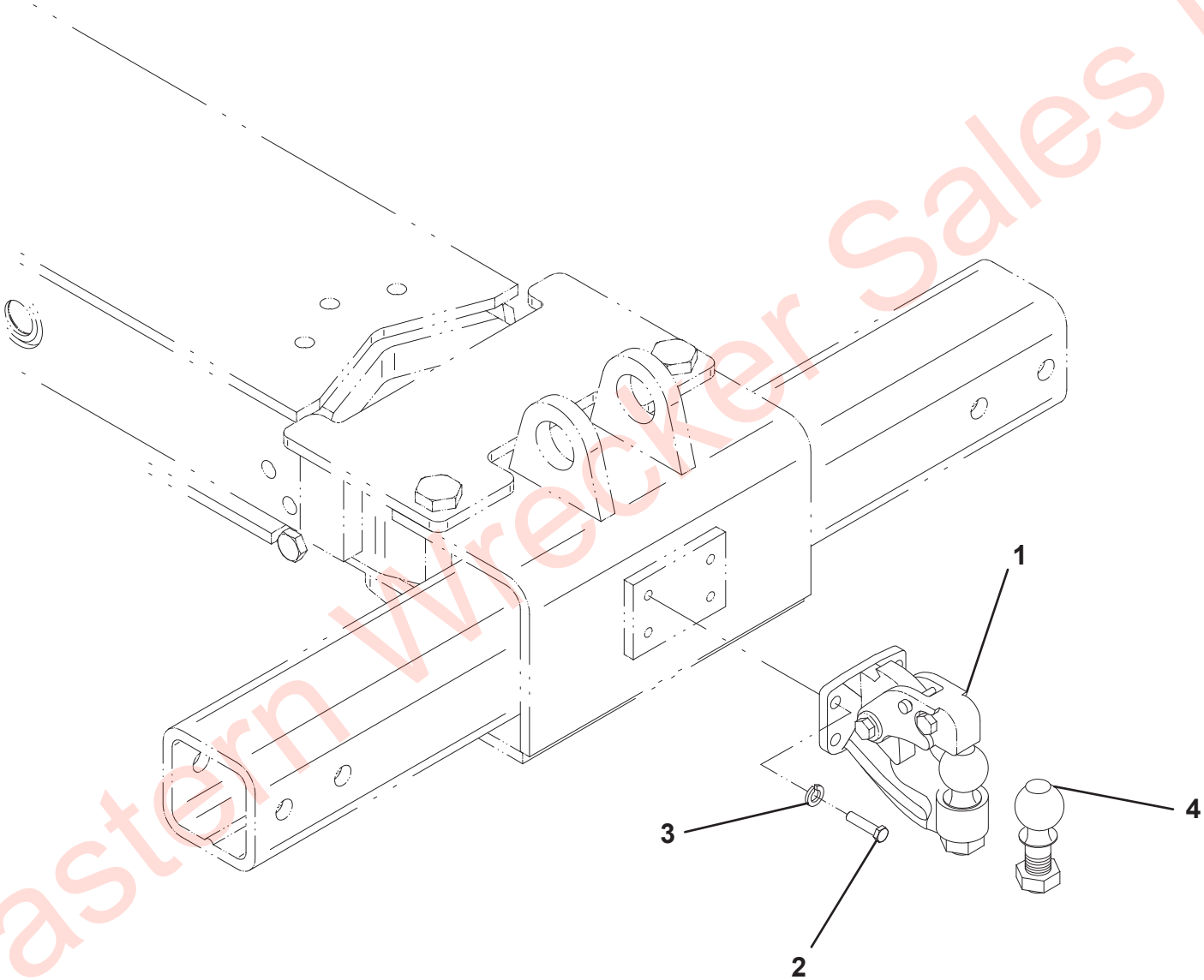

Eastern Wrecker Sales Inc

TRAILER AIR INSTALLATION

ITEM	PART NO.	DESCRIPTION	QTY	REV
	2503630028	Trailer Air Installation	Ref	F
1	7312000015	Gladhand	1	
2	7312000016	Gladhand	1	
3	7446502518	Fitting	2	
4	7445060435	Fitting	4	
5	7565000014	Airline	50 FT	
6	7443000148	Bushing	2	
7	7443000146	Elbow	2	
8	7443000145	Bushing	2	
9	7577000145	Seal Kit	1	
10	1001170036	Shield	2	
11	1001171933	Ring	2	

Eastern Wrecker Sales Inc

TRAILER AIR INSTALLATION

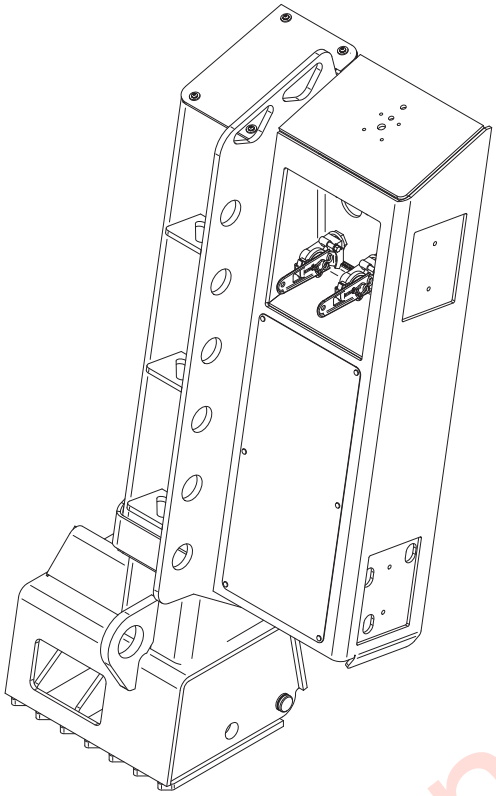

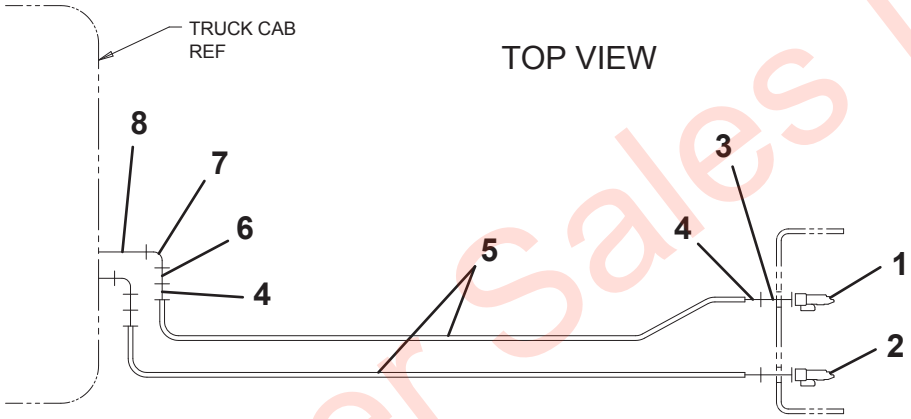

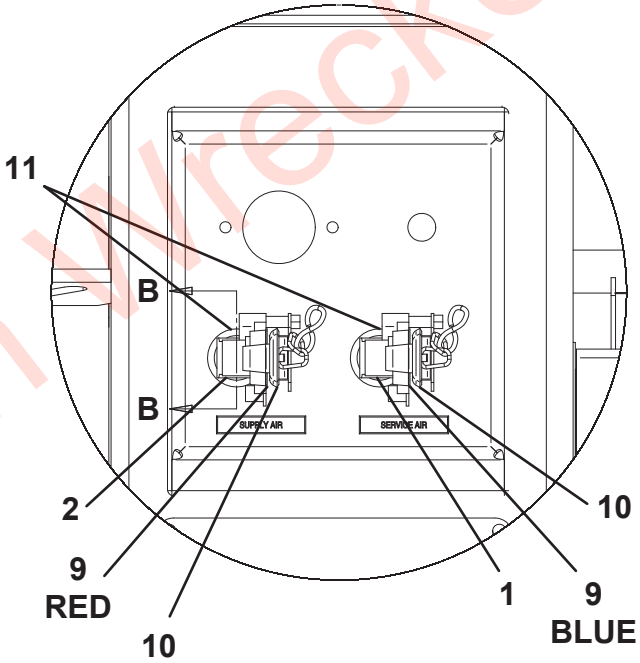

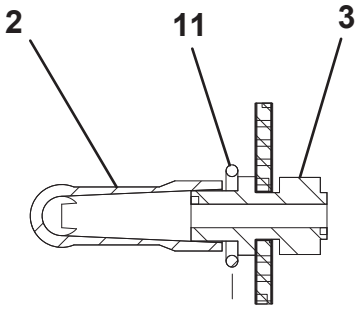

SECTION B-B

Eastern Wrecker Sales Inc

TRAILER PLUG INSTALLATION

ITEM	PART NO.	DESCRIPTION	QTY	REV
	2502330145	Trailer Plug Installation	Ref	C
1	7346000055	7-Way Plug	1	
2	7346000078	7-Way Plug Boot	1	
3	7115150864	Bolt, 0.31"-18NC x 1.00"	2	
4	7950150161	Flatwasher, 0.31" ID	2	
5	7660152601	Locknut, 0.31”-18NC	2	

Eastern Wrecker Sales Inc

TRAILER PLUG INSTALLATION

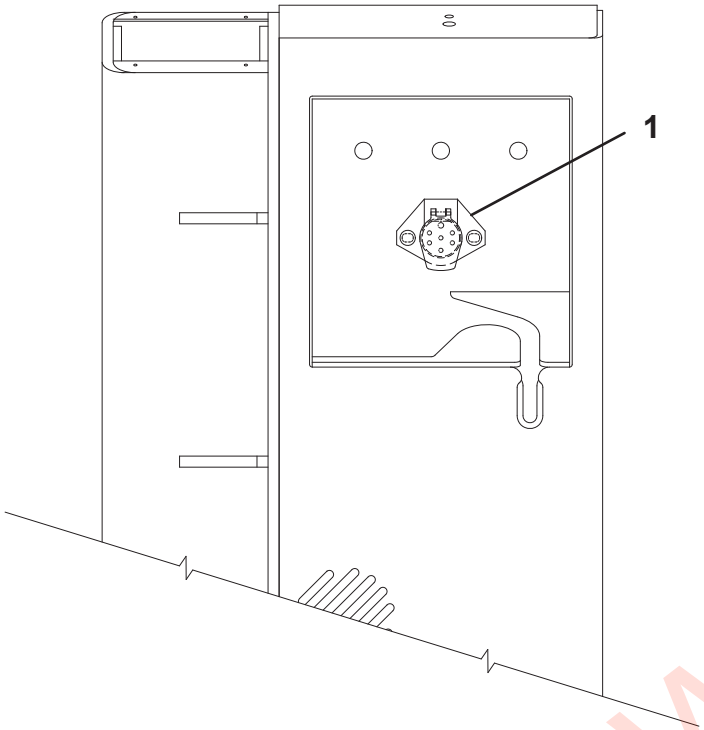

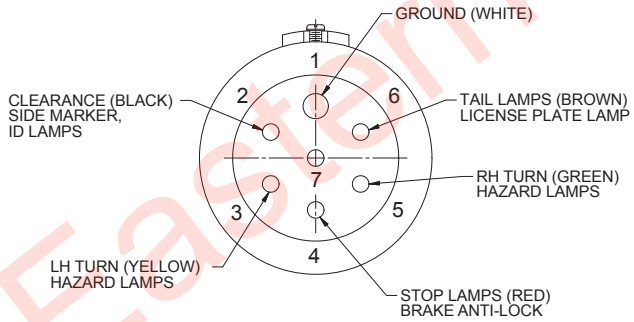

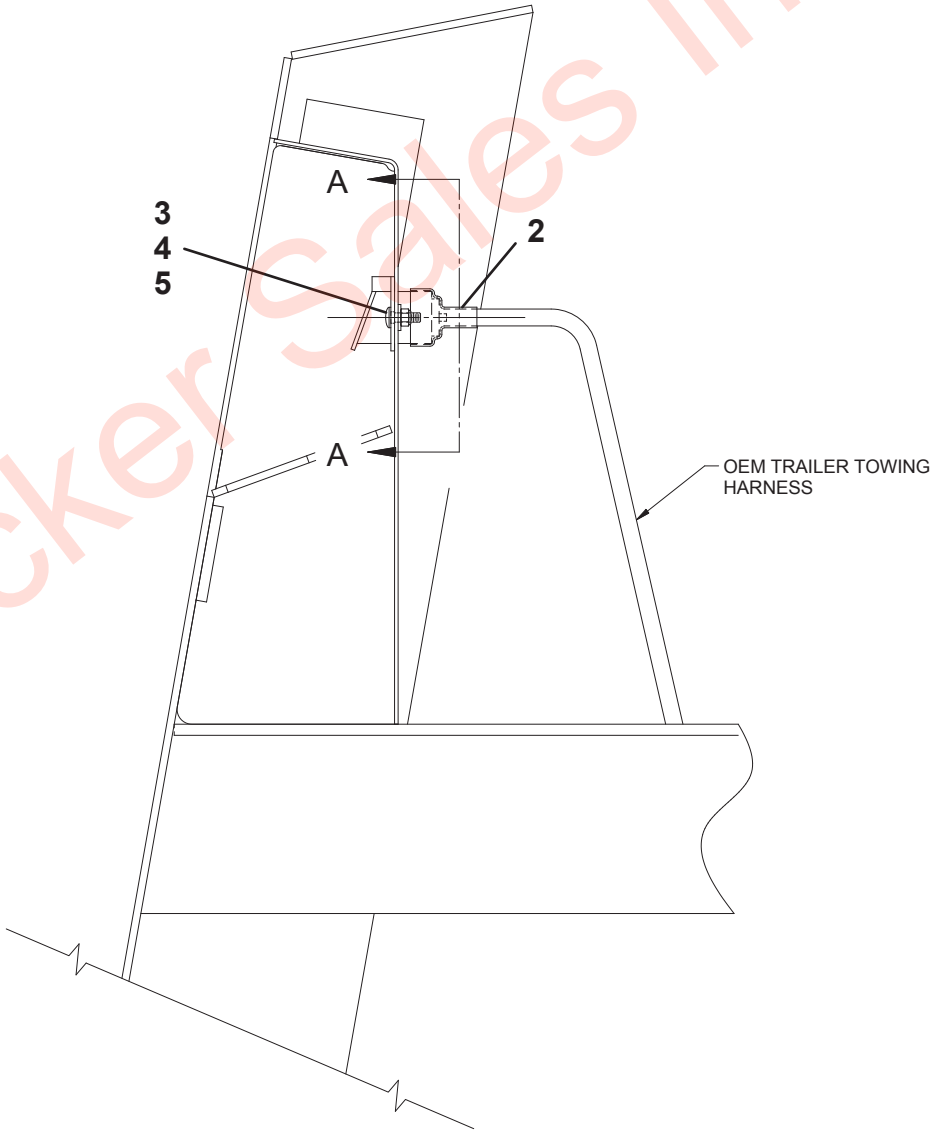

Eastern Wrecker Sales Inc

TOOL STORAGE

ITEM	PART NO.	DESCRIPTION	QTY	REV
	1001208205	Tool Storage	Ref	B
1	1001201215	Bracket	1	
2	1001201216	Bracket	1	
3	1001201217	Bracket	2	
4	1001201218	Bracket	2	
5	1001196552	Screw, #8 x 0.75”	4	
6	1001210868	Screw, #10 x 0.75”	10	
7	1001201367	Screw, 0.25” x 1.00”	6	

Eastern Wrecker Sales Inc

TOOL STORAGE

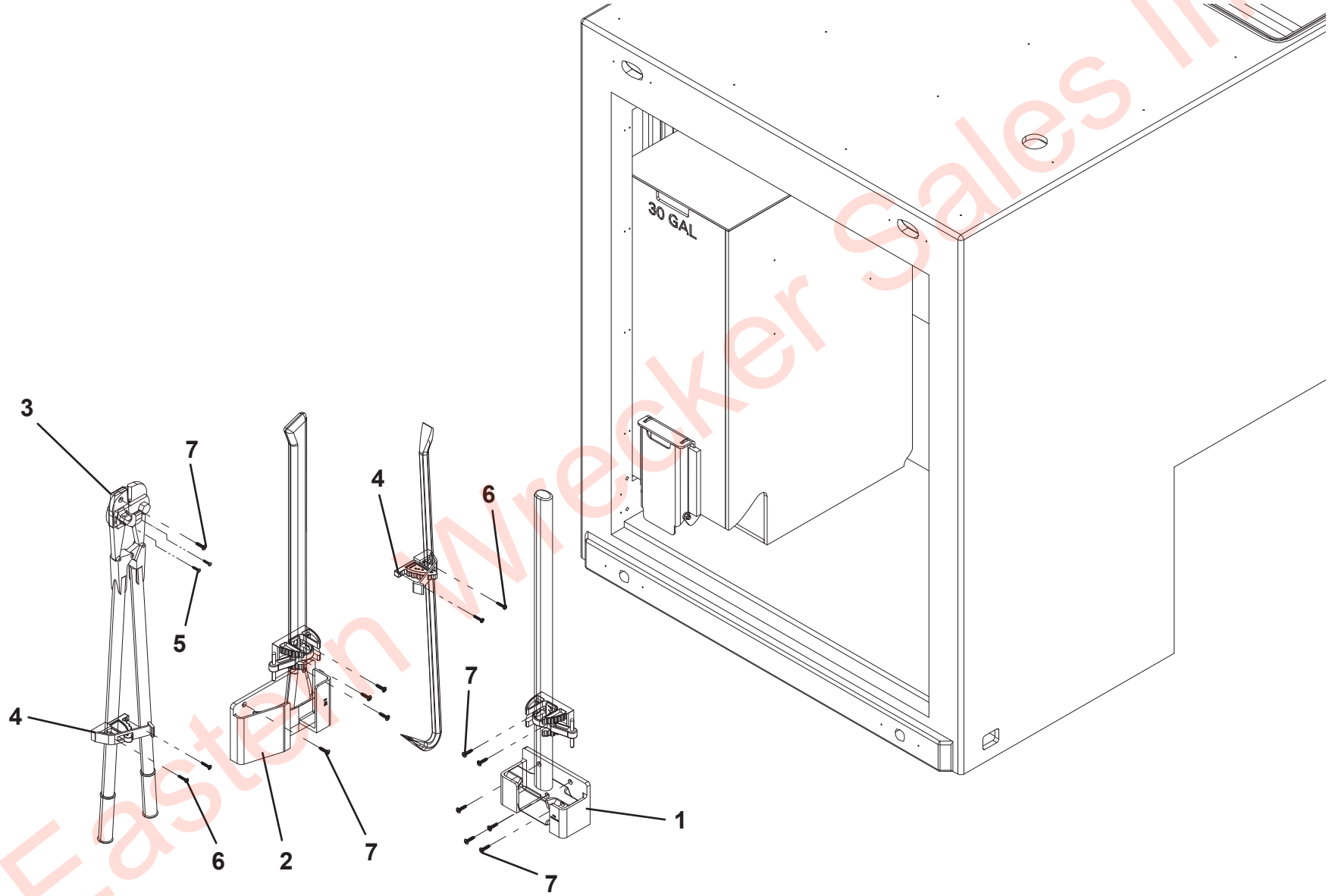

Eastern Wrecker Sales Inc

TILT DOWN STORAGE TRAY

ITEM	PART NO.	DESCRIPTION	QTY	REV
	1001208631	Tilt Down Storage Tray - Tandem	Ref	A
1	3020029	Bearing Grease	A/R	
2	1001169080	Screw, 0.38"-16 X 1.25"	12	
3	1001170090	Decal	1	
4	1001170091	Decal	1	
5	1001170305	Bolt, #6-20	4	
6	1001170307	Washer, M6 ID	4	
7	1001170310	Nut, M6	4	
8	1001170328	Screw, M8-50	4	
9	1001170329	Washer, M8 ID	4	
10	1001170330	Nut, M8	4	
11	1001170331	Roller Assembly	1	
12	1001170332	Latch	1	
13	1001179349	Strap	2	
14	1001197693	Tilt-Down Drawer	1	
15	1001183735	Bracket, RH	1	
16	1001183736	Bracket, LH	1	
17	7114160850	Screw, 0.38"-16 X 1.00"	4	
18	7660162601	Locknut, 0.38"-16NC	4	
19	7950160141	Flatwasher, 0.38" ID	16	
20	1001166644	Nut, 0.38"-16	12	
21	1001170428	Strap	2	
22	1001200997	Screw, M5X25	4	

Eastern Wrecker Sales Inc

TILT DOWN STORAGE TRAY

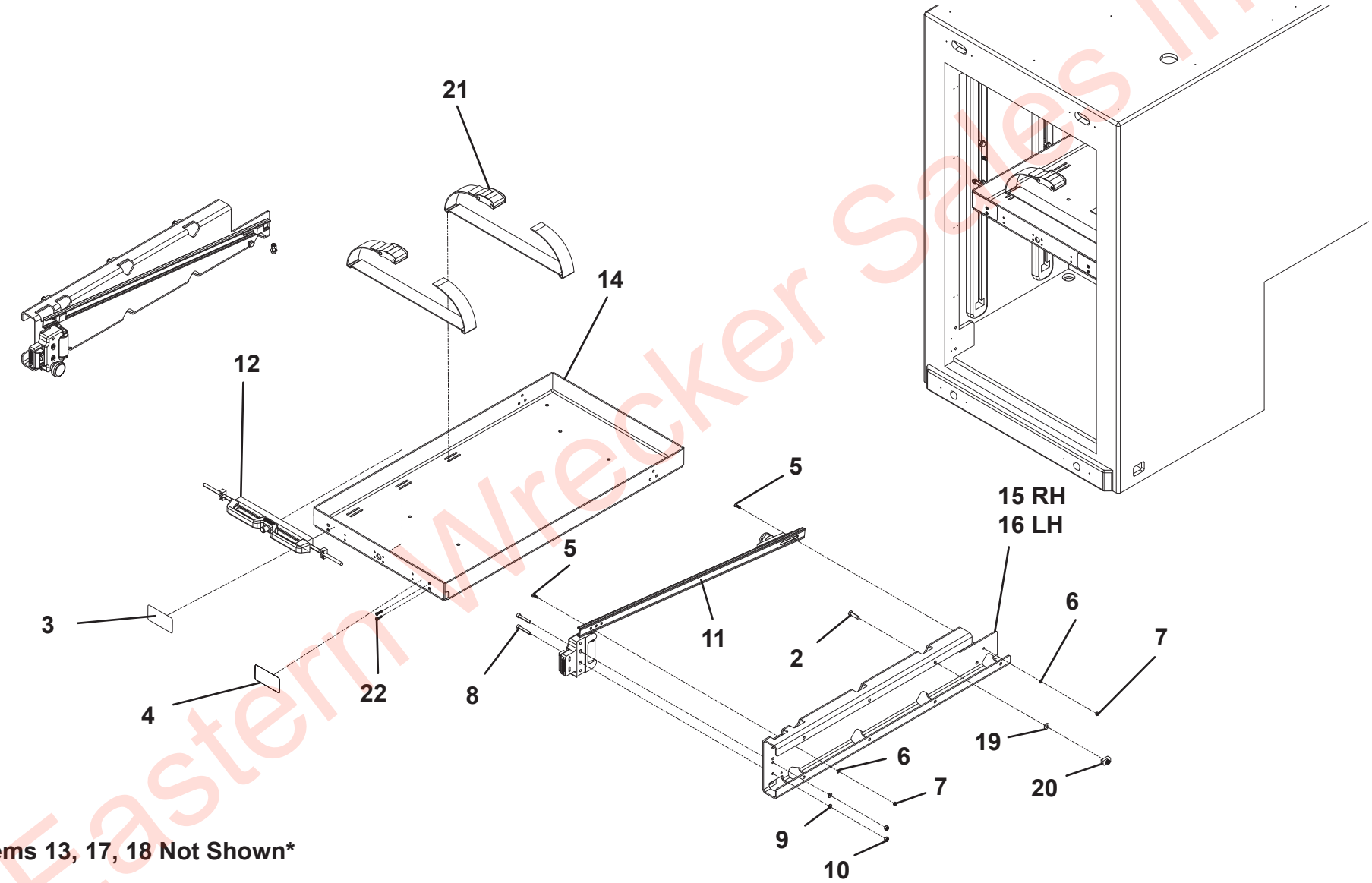

Items 13, 17, 18 Not Shown

Eastern Wrecker Sales Inc

SNATCH BLOCK STORAGE INSTALLATION - TANDEM

ITEM	PART NO.	DESCRIPTION	QTY	REV
	1001217105	Snatch Block Storage Installation - Tandem	Ref	A
1	1001164560	Bracket, Top	4	
2	1001164562	Bracket, Bottom	4	
3	1001166974	Washer, 0.38"	4	
4	1001168545	Screw, 0.38" X 1.25"	16	
5	1001168733	Nut, 0.25"-20	4	
6	1001168993	Screw, 0.38"-16 X 1.50"	4	
7	7114140618	Nut, 0.25"-20 X 0.75"	4	
8	7660162601	Locknut, 0.38"-16NC	4	
9	7950140003	Lockwasher, 0.25" ID	4	
10	7950140143	Flatwasher, 0.25" ID	4	
11	7950160143	Flatwasher, 0.38" ID	24	
12	1001201112	Bracket	1	

Eastern Wrecker Sales Inc

SNATCH BLOCK STORAGE INSTALLATION - TANDEM

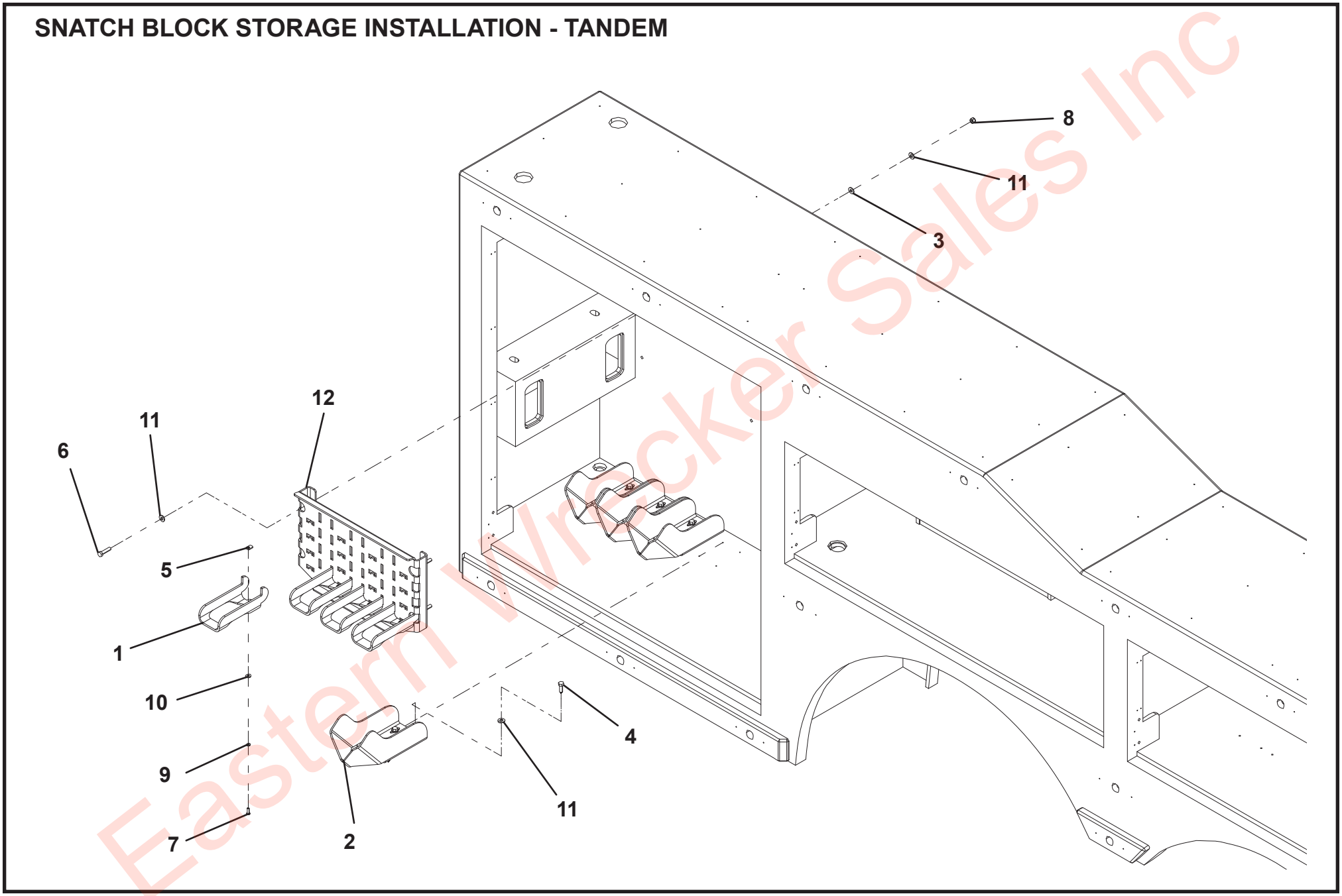

Eastern Wrecker Sales Inc

SNATCH BLOCK STORAGE INSTALLATION - TRI-AXLE

ITEM	PART NO.	DESCRIPTION	QTY	REV
	1001195134	Snatch Block Storage Installation - Tri-Axle	Ref	A
1	3020029	Lube, Bearing Grease	A/R	
2	1001164560	Bracket, Top	4	
3	1001165564	Plate	1	
4	1001165570	Bracket	1	
5	1001165571	Bracket	1	
6	1001165584	Plate	2	
7	1001168733	Nut, 0.25"-20	4	
8	1001169063	Retaining Ring	2	
9	1001169064	Retaining Ring	4	
10	1001169076	Bearing	2	
11	1001169078	Plug	1	
12	1001169080	Screw, 0.38"-16 X 1.25"	18	
13	1001169083	Screw, 0.38"-16 X 2.00"	4	
14	1001190342	Bracket	4	
15	1001190359	Support	1	
16	1001190361	Bracket	1	
17	1001192126	Tube	1	
18	7114140618	Bolt, 0.25"-20 X 0.75"	4	
19	7660162601	Locknut, 0.38"-16NC	20	
20	7690142845	Pin	3	
21	7950140003	Lockwasher, 0.25" ID	4	
22	7950140143	Flatwasher, 0.25" ID	4	
23	7950160143	Flatwasher, 0.38" ID	42	
24	1001166644	Nut, 0.38"-16	2	

Eastern Wrecker Sales Inc

SNATCH BLOCK STORAGE INSTALLATION - TRI-AXLE

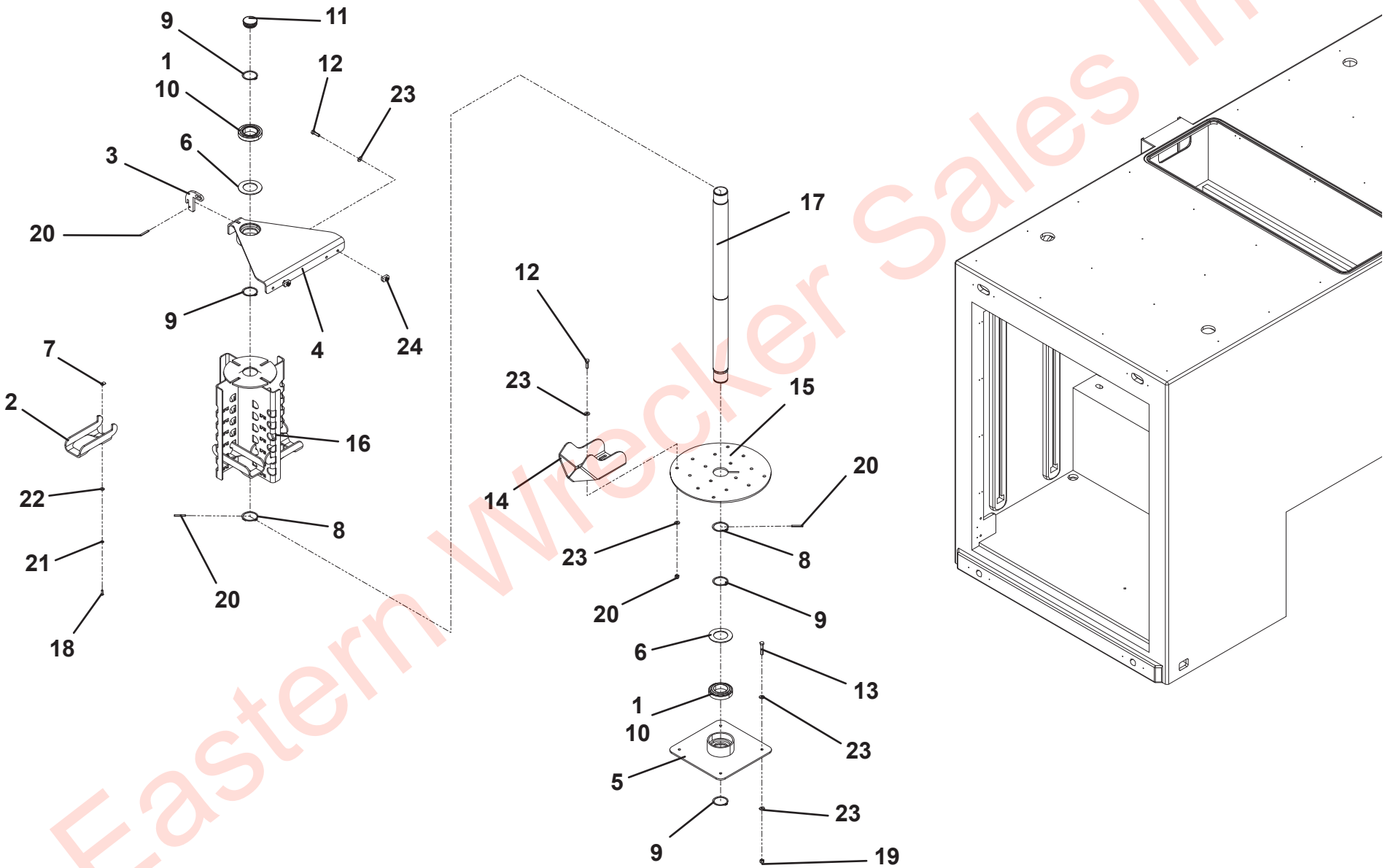

Eastern Wrecker Sales Inc

TIRE LIFT STORAGE - TANDEM BODY

ITEM	PART NO.	DESCRIPTION	QTY	REV
	1001207556	Tire Lift Storage - Tandem Body	Ref	A
1	1001166974	Washer, 0.38” ID	5	
2	1001168545	Capscrew, 0.38” - 16NC x 1.25”	4	
3	1001168993	Capscrew, 0.38” - 16NC x 1.50”	5	
4	1001182248	Bracket	1	
5	1001190409	Bus Arm Storage	1	
6	1001207624	Bracket	1	
7	7660162601	Locknut, 0.38” - 16NC	5	
8	7950160143	Flatwasher, 0.38” ID	14	

Eastern Wrecker Sales Inc

TIRE LIFT STORAGE - TANDEM BODY

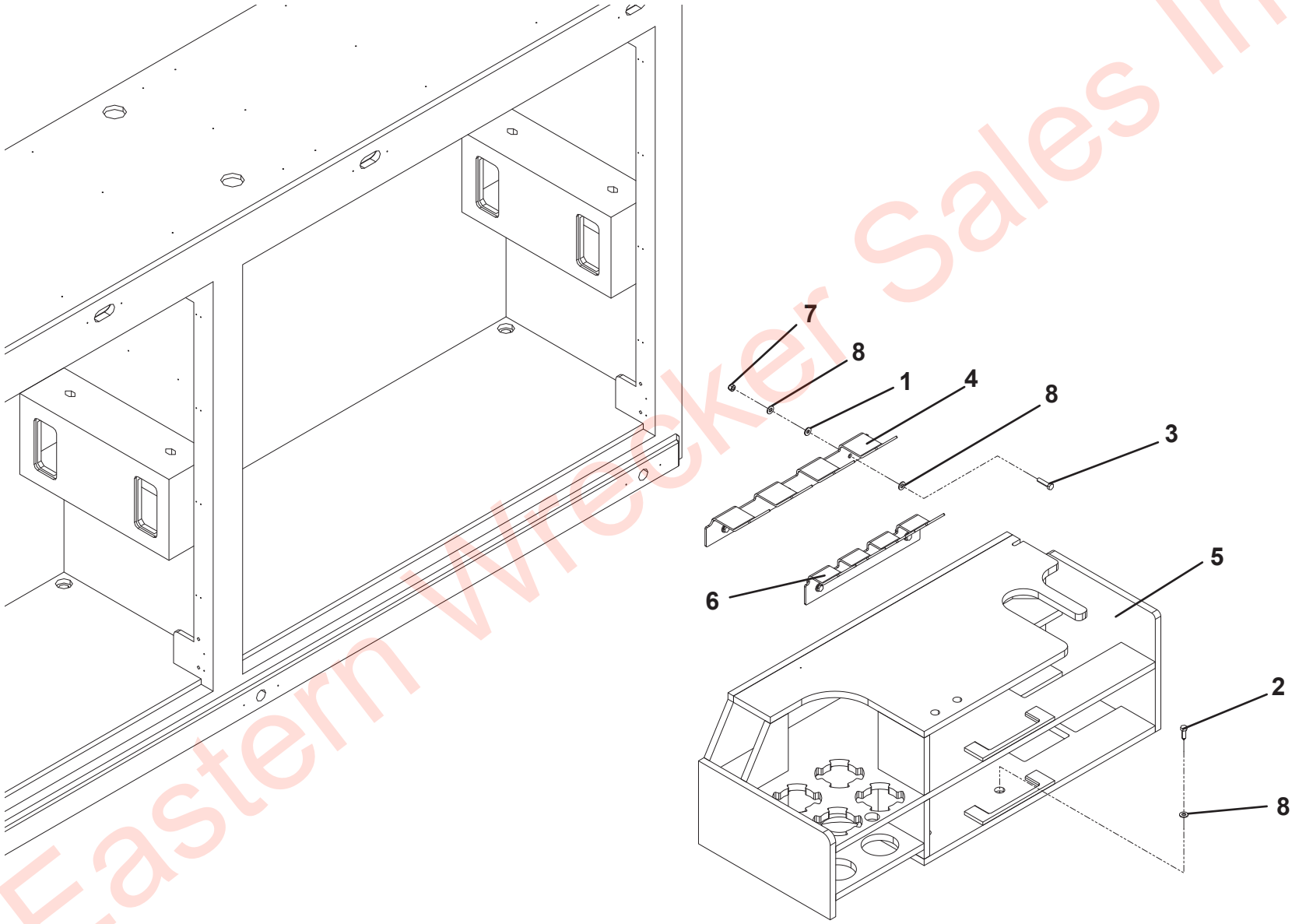

Eastern Wrecker Sales Inc

TIRE LIFT STORAGE - 39” AND 37” TOOLBOX

ITEM	PART NO.	DESCRIPTION	QTY	REV
	1001205796	Tire Lift Storage - 39” & 37” Toolbox	Ref	B
1	1001165862	Tray. Small	1	
2	1001165863	Tray, Large	1	
3	1001168545	Screw, 0.38" X 1.25"	4	
4	1001170968	Pad, Small	1	
5	1001170970	Pad, Large	1	
6	1001170971	Bracket	1	
7	1001192287	Storage	1	
8	7950160143	Flatwasher, 0.38" ID	8	
9	7115161650	Capscrew, 0.38” - 16NC x 2.00”	4	
10	7660162601	Locknut, 0.38” - 16NC	4	
11	1380135	Clip	1	
12	3900339	Screw, #6 - 19NC x 0.50”	1	

Eastern Wrecker Sales Inc

TIRE LIFT STORAGE - 39” AND 37” TOOLBOX

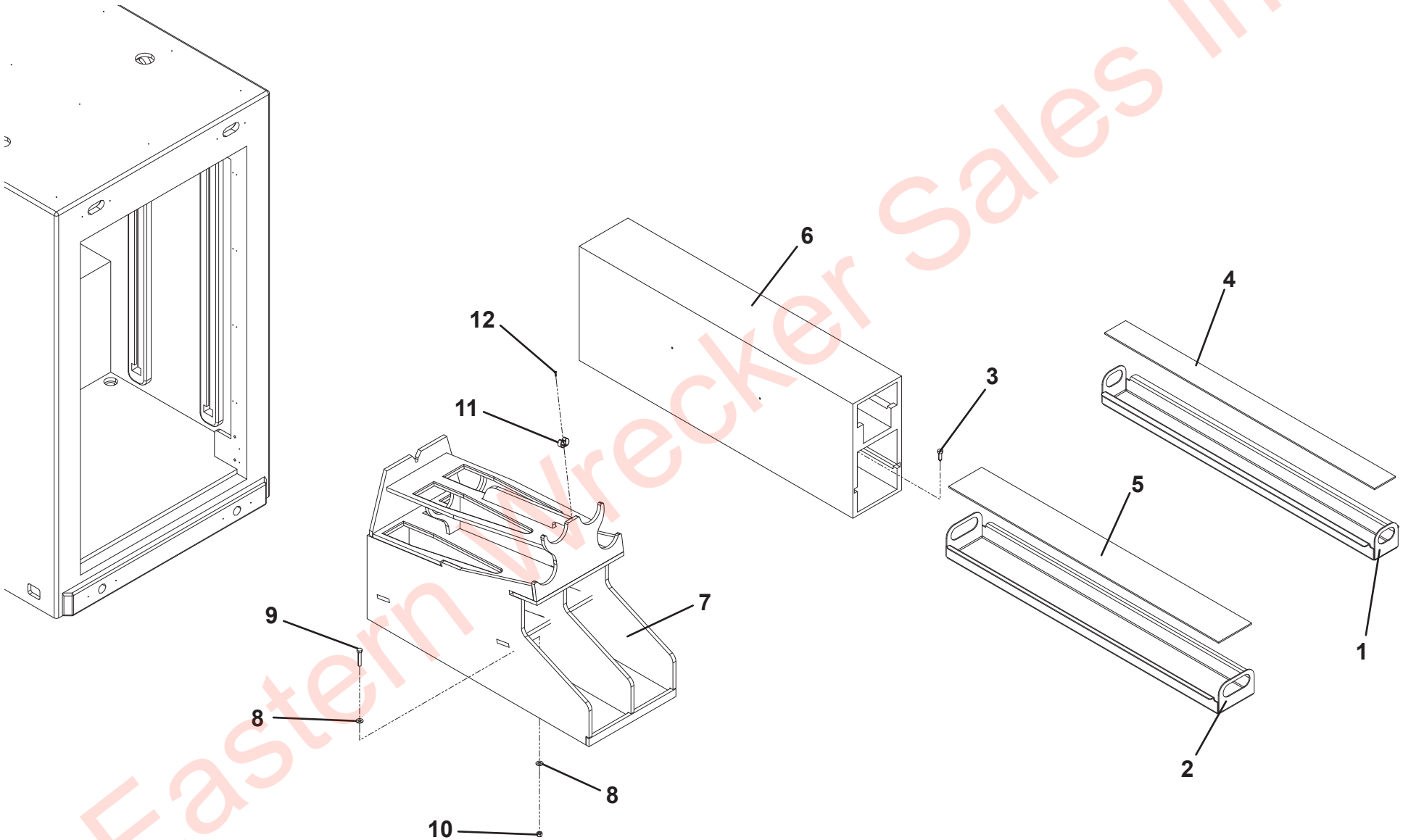

Eastern Wrecker Sales Inc

TRAFFIC CONE STORAGE

ITEM	PART NO.	DESCRIPTION	QTY	REV
	1001207508	Traffic Cone Storage	Ref	A
1	1001168993	Screw, 0.38”-16 x 1.50”	4	
2	1001190551	Bracket	1	
3	7660162601	Locknut, 0.25”-20	4	
4	7950160143	Flatwasher, 0.38” ID	8	

Eastern Wrecker Sales Inc

TRAFFIC CONE STORAGE

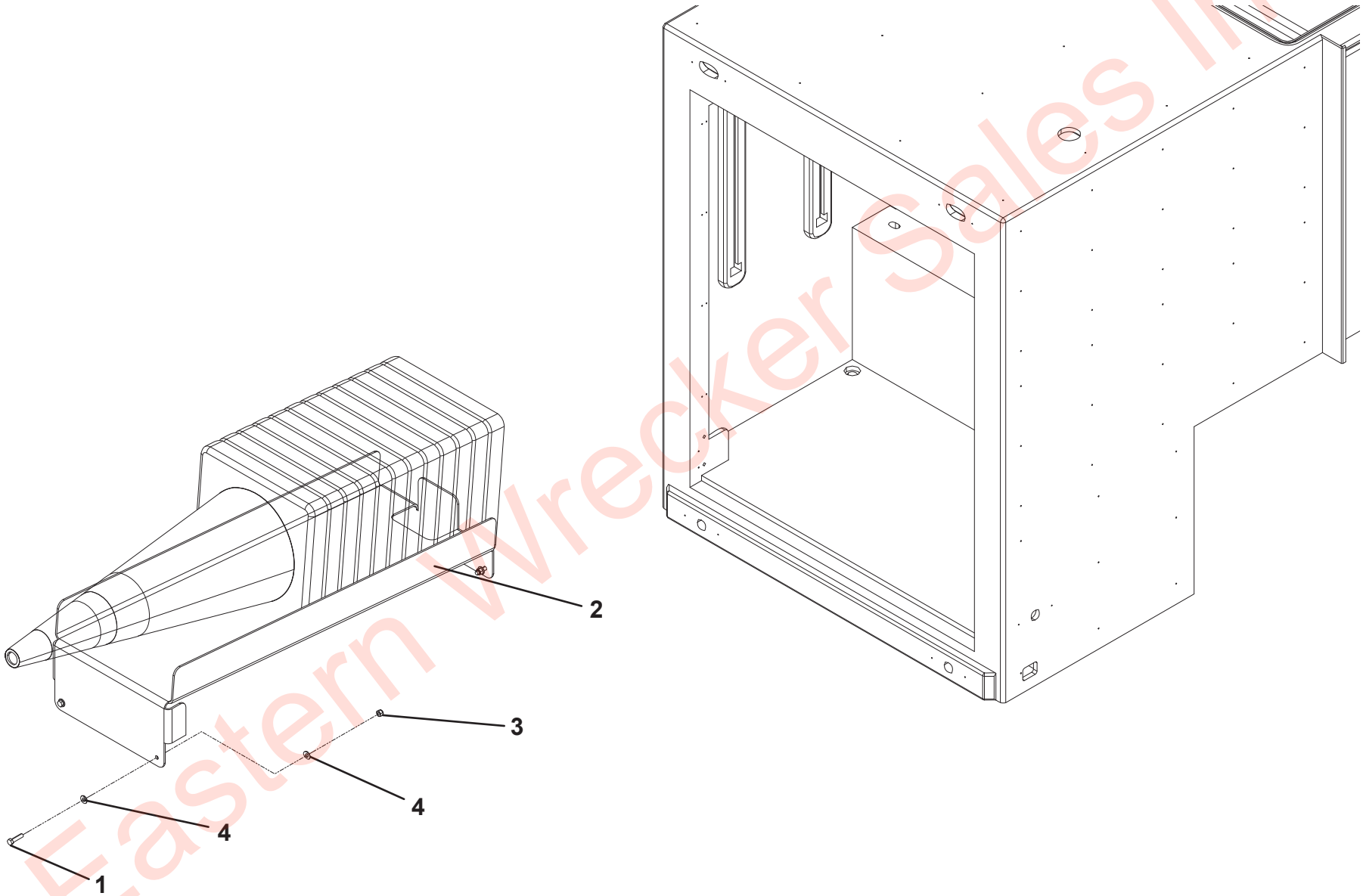

Eastern Wrecker Sales Inc

LADDER STORAGE

ITEM	PART NO.	DESCRIPTION	QTY	REV
	1001200001	Ladder Storage	Ref	B
1	1001183037	Nut, 0.25”-20	2	
2	1001201523	Plate	1	
3	1001201534	Bracket	1	

Eastern Wrecker Sales Inc

LADDER STORAGE

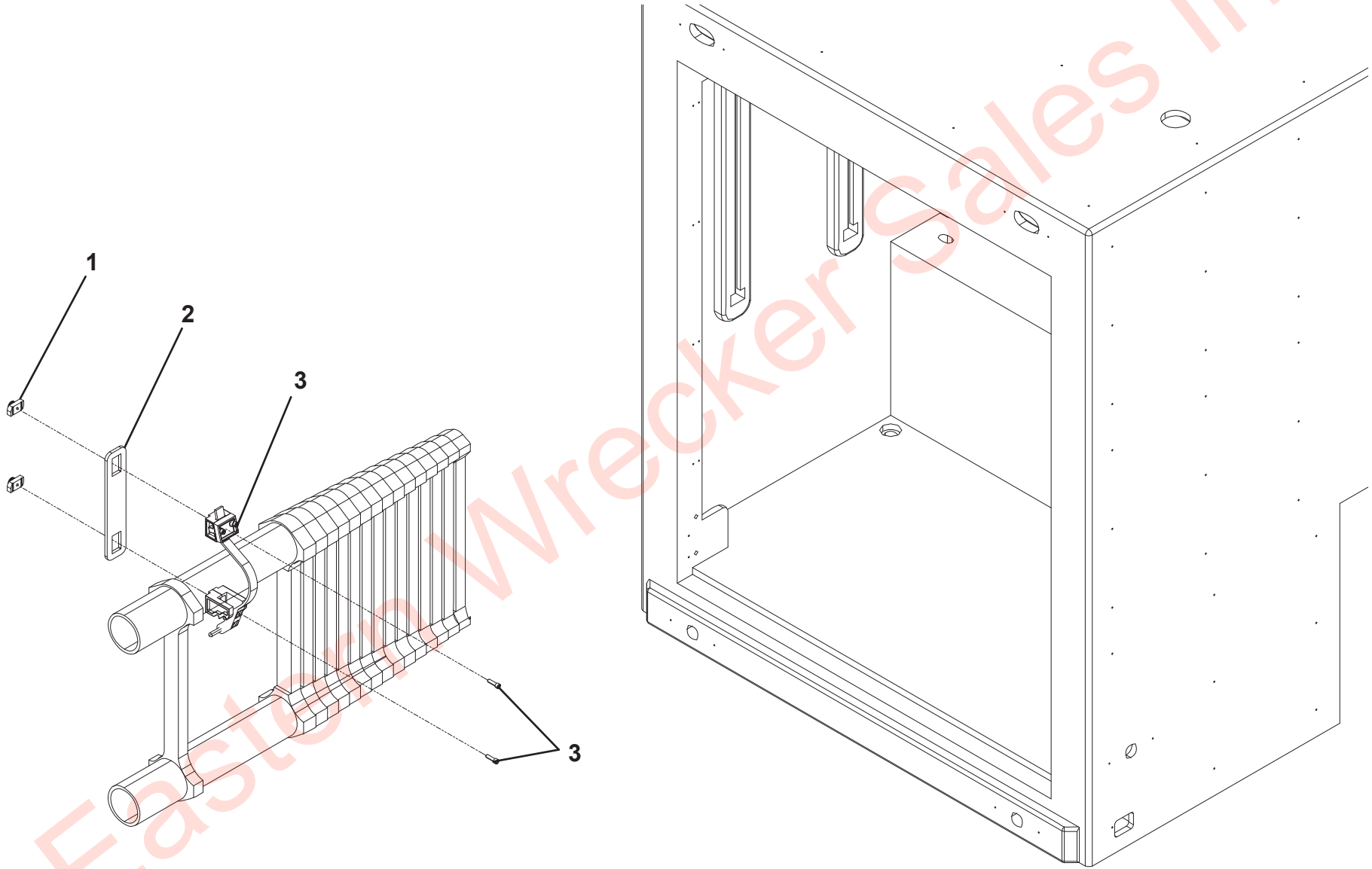

Eastern Wrecker Sales Inc

TOW LIGHT STORAGE

ITEM	PART NO.	DESCRIPTION	QTY	REV
	1001195592	Tow Light Storage	Ref	A
1	1001170618	Bracket	2	
2	1001195523	Screw, 0.25” x 1.00”	4	

Eastern Wrecker Sales Inc

TOW LIGHT STORAGE

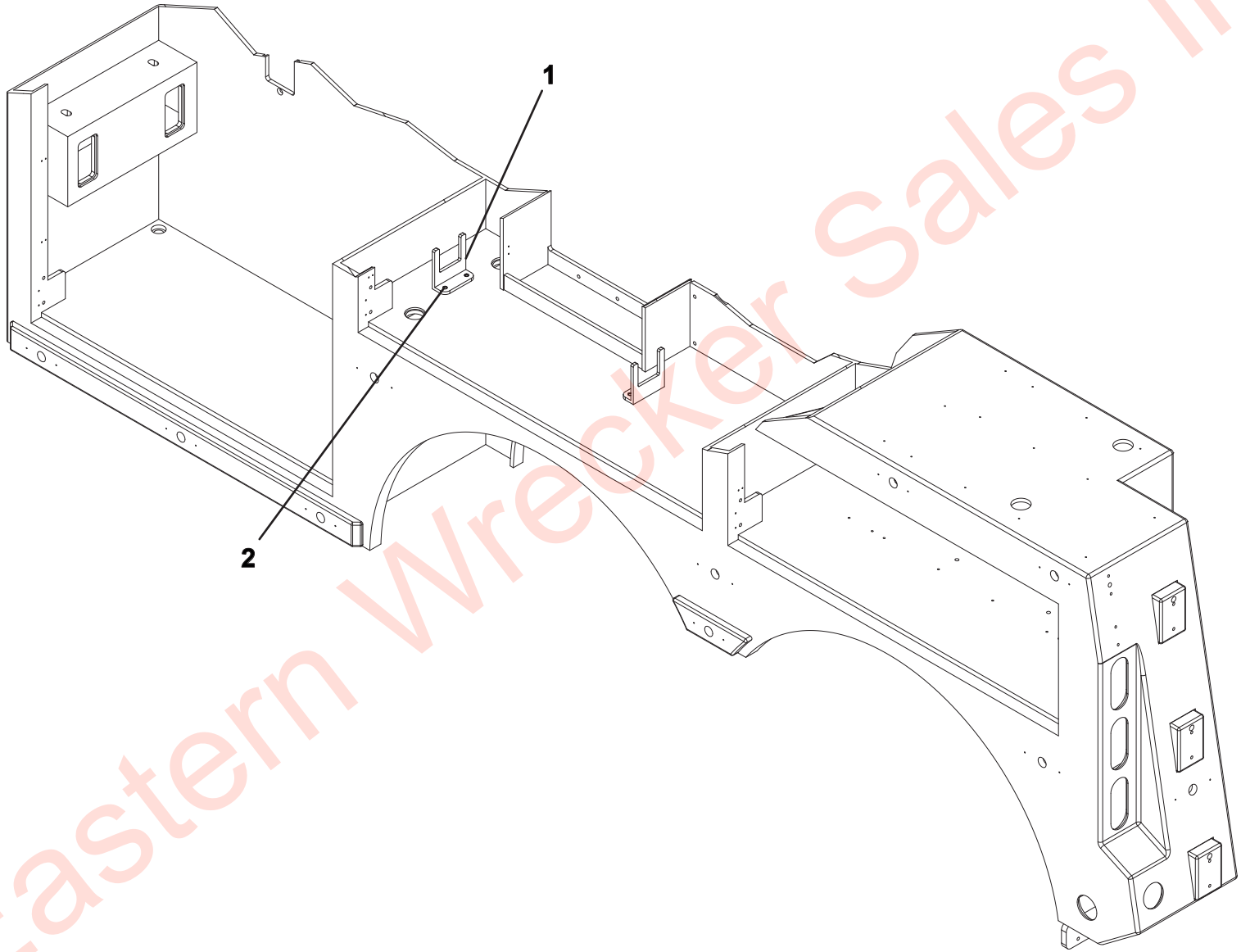

Eastern Wrecker Sales Inc

WHEEL CHOCK STORAGE

ITEM	PART NO.	DESCRIPTION	QTY	REV
	1001195520	Wheel Chock Storage	Ref	B
1	1001170707	Wheel Chock Stop	4	
2	1001195523	Screw, 0.25” x 1.00”	8	

Eastern Wrecker Sales Inc

WHEEL CHOCK STORAGE

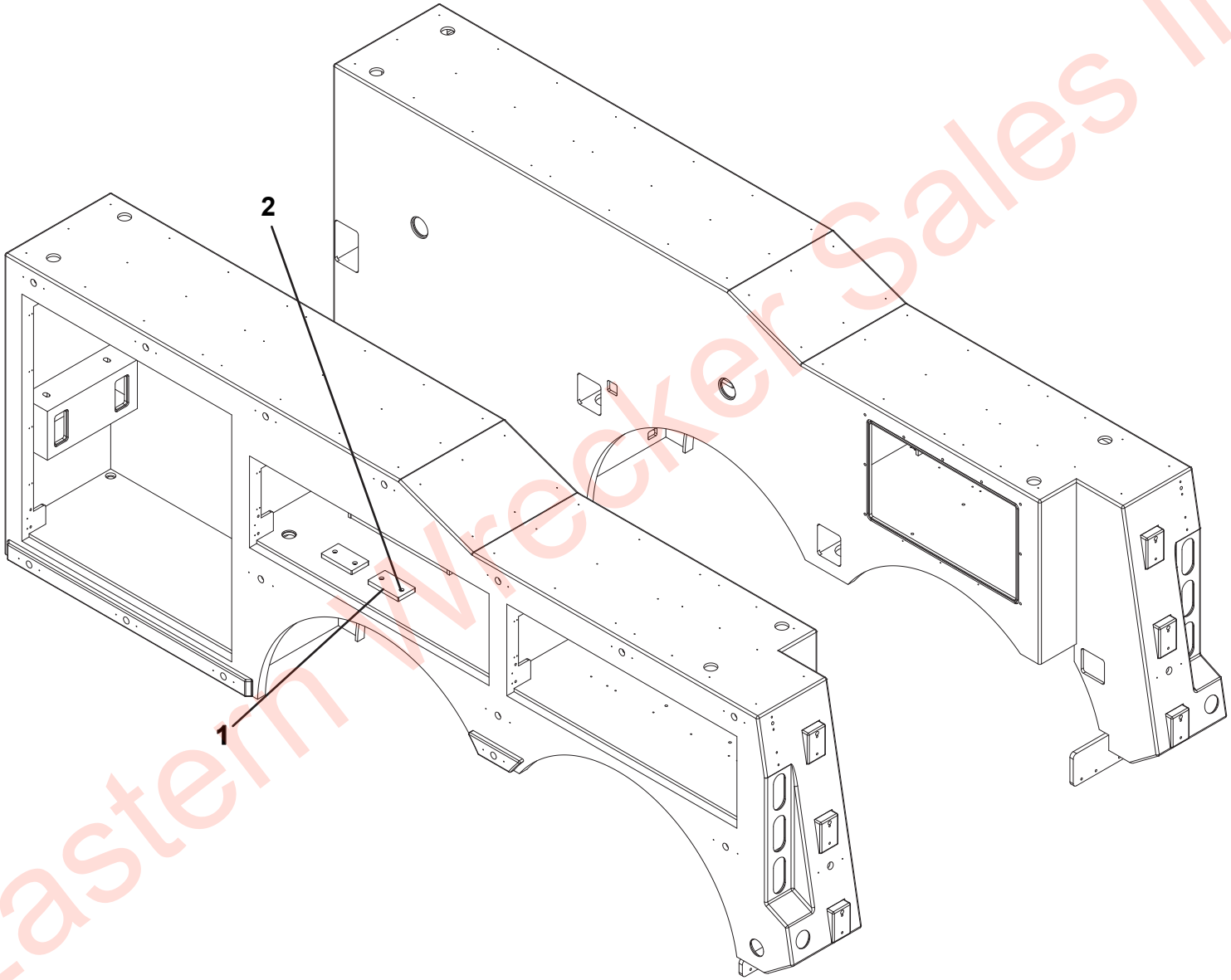

Eastern Wrecker Sales Inc

FLARE STORAGE

ITEM	PART NO.	DESCRIPTION	QTY	REV
	1001201704	Flare Storage	Ref	A
1	1001195523	Screw, 0.25” x 1.00”	8	
2	1001201695	Bracket	2	

Eastern Wrecker Sales Inc

FLARE STORAGE

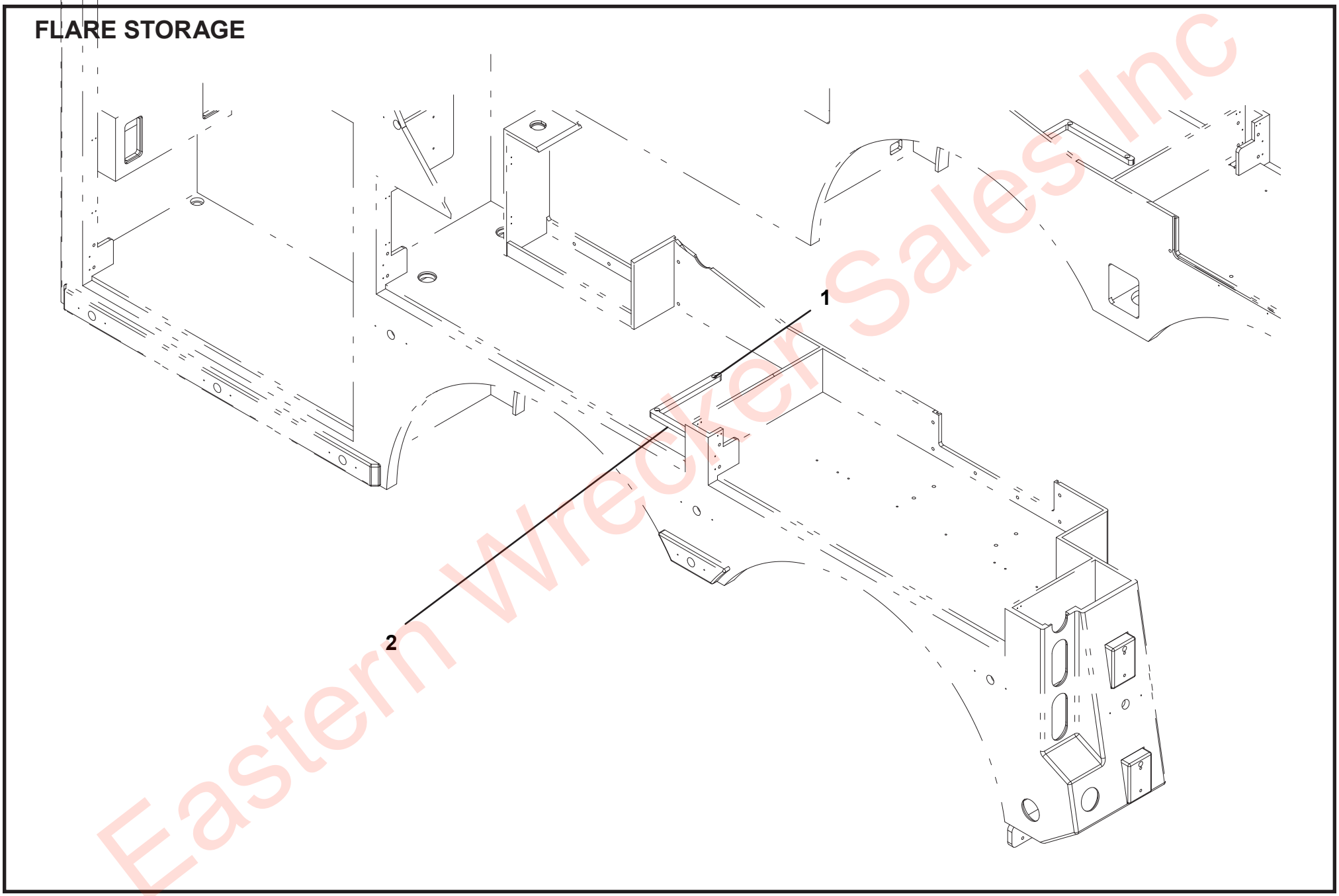

Eastern Wrecker Sales Inc

BOTTLE JACK STORAGE

ITEM	PART NO.	DESCRIPTION	QTY	REV
	1001196214	Bottle Jack Storage	Ref	B
1	1001170839	Bracket	1	
2	1001195257	Screw, 0.25” x 0.50”	2	
3	1001195523	Screw, 0.25” x 1.00”	4	
4	7950140143	Flatwasher, 0.25” ID	2	
5	1001167268	Strap	2	

Eastern Wrecker Sales Inc

BOTTLE JACK STORAGE

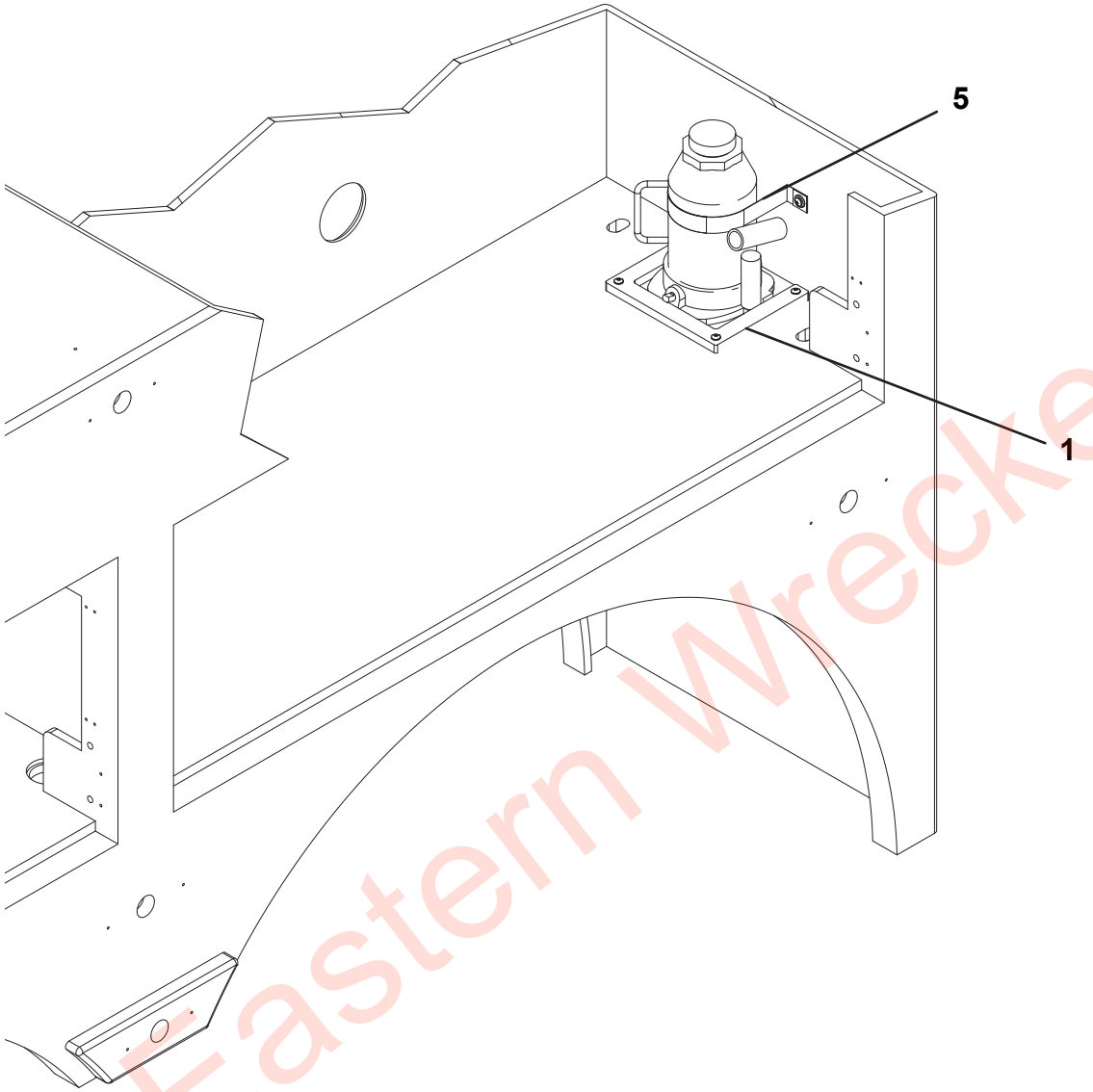

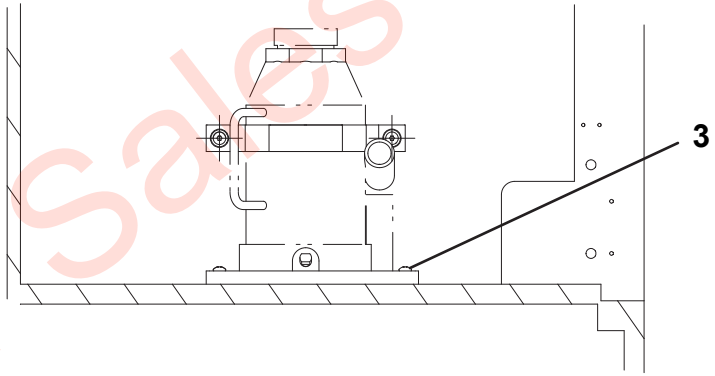

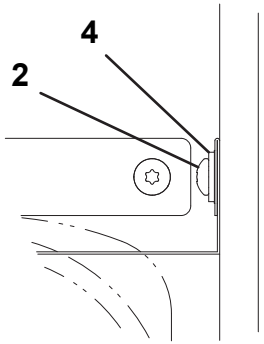

Eastern Wrecker Sales Inc

FIFTH WHEEL STORAGE INSTALLATION

ITEM	PART NO.	DESCRIPTION	QTY	REV
	1001195942	Fifth Wheel Storage Installation	Ref	C
1	1001168545	Screw, 0.38” x 1.25”	6	
2	1001190568	Bracket	1	
3	7950160143	Flatwasher, 0.38” ID	6	
4	1001191810	Bracket	1	

Eastern Wrecker Sales Inc

FIFTH WHEEL STORAGE INSTALLATION

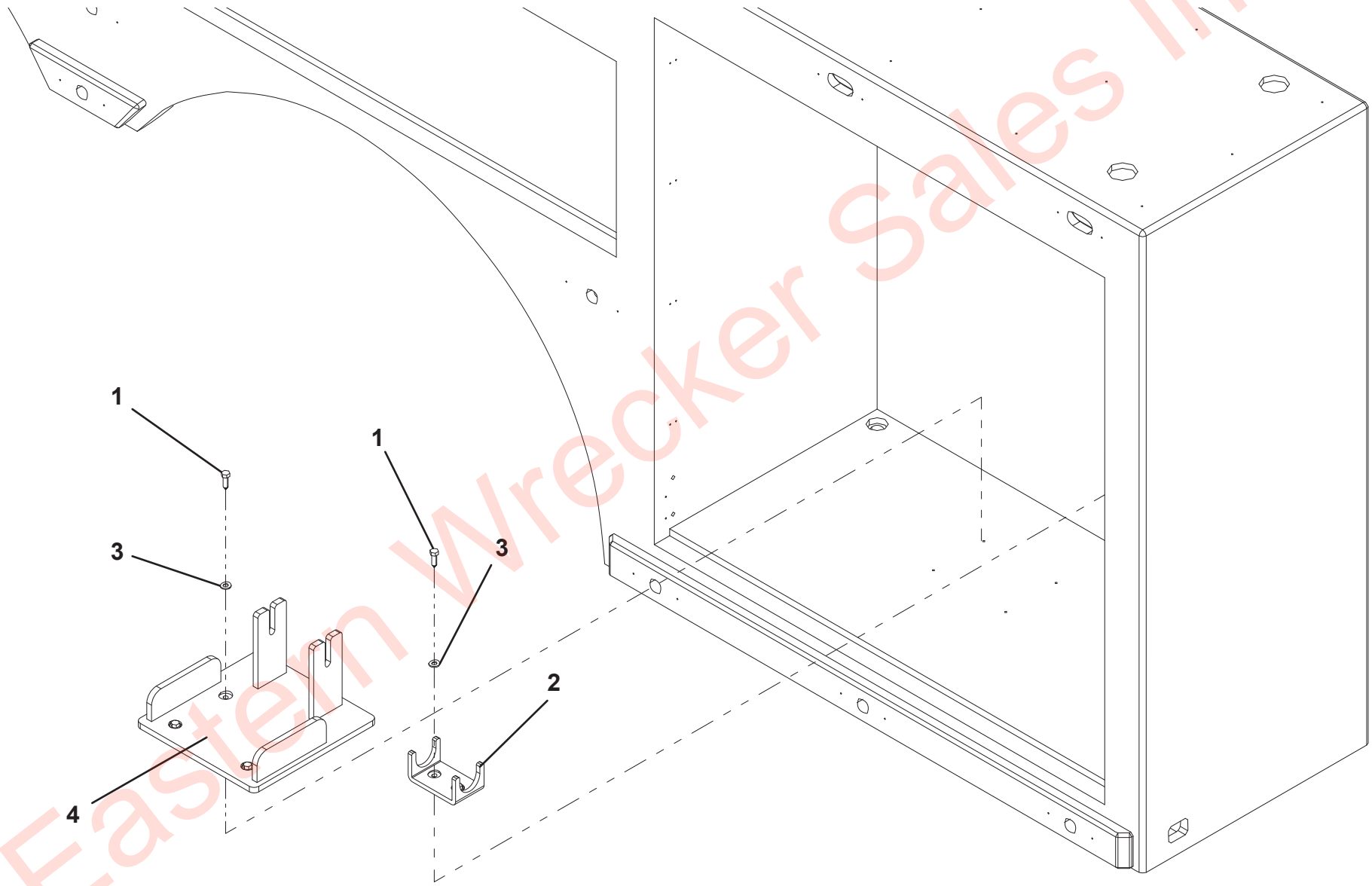

Eastern Wrecker Sales Inc

FRAME FORK STORAGE INSTALLATION

ITEM	PART NO.	DESCRIPTION	QTY	REV
	1001195839	Frame Fork Storage Installation	Ref	C
1	1001160799	Bracket	1	
2	1001166974	Washer, 0.38" ID Rubber	10	
3	1001168544	Screw, 0.38"-16 X 1.75"	6	
4	1001169083	Screw, 0.38"-16 X 2.00"	4	
5	1001190926	Bracket	1	
6	1001190988	Bracket	1	
7	1001195257	Screw, 0.25" X 0.50"	2	
8	1001195523	Screw, 0.25" X 1.00"	4	
9	1001195838	Bracket	1	
10	7660162601	Locknut, 0.38"-16NC	10	
11	7950160143	Flatwasher, 0.38" ID	20	

Eastern Wrecker Sales Inc

FRAME FORK STORAGE INSTALLATION

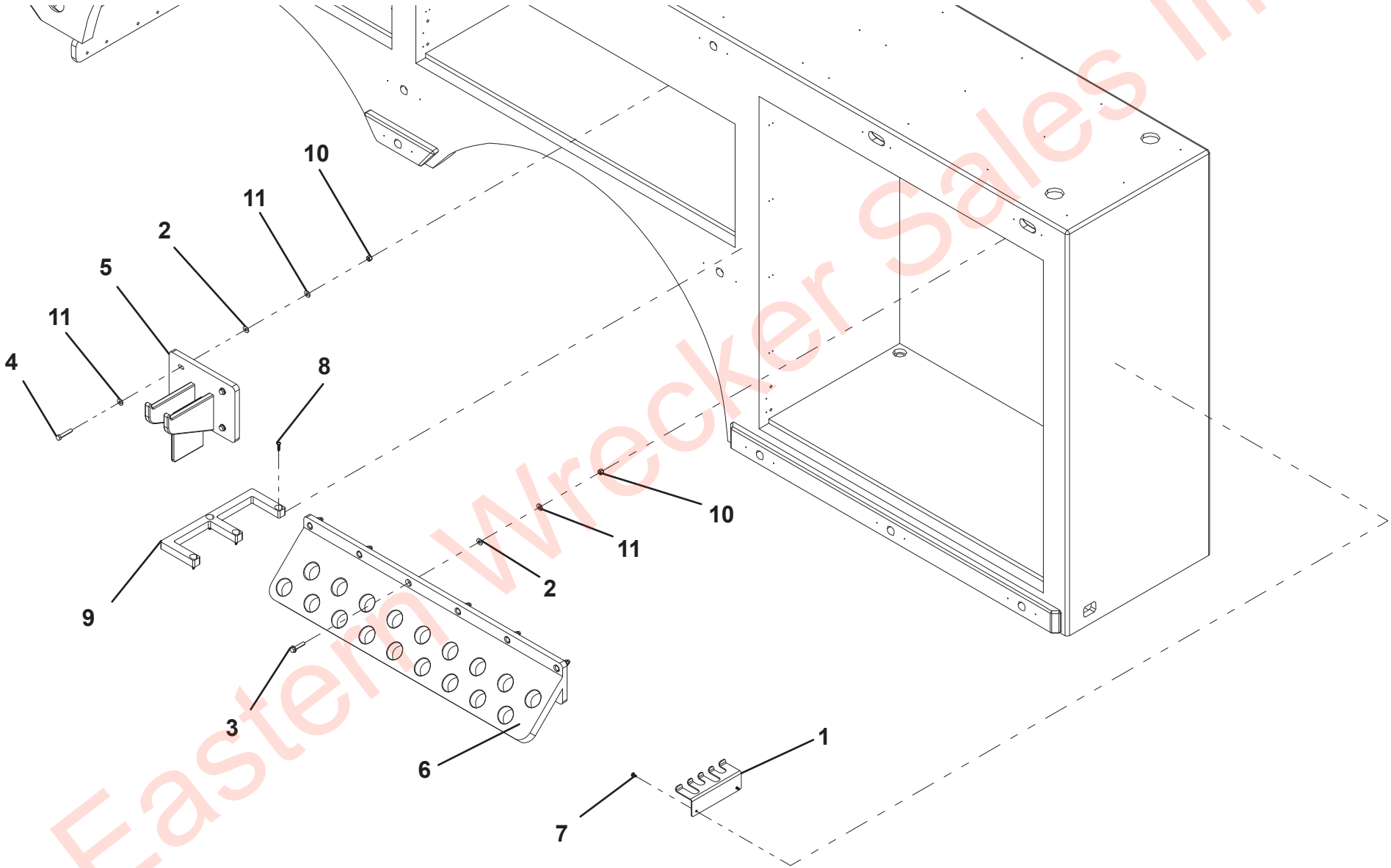

Eastern Wrecker Sales Inc

FORK RISER STORAGE INSTALLATION

ITEM	PART NO.	DESCRIPTION	QTY	REV
	1001195788	Fork Riser Storage Installation	Ref	B
1	1001169083	Screw, 0.38”-16 x 2.00”	4	
2	1001190926	Bracket	1	
3	7660162601	Locknut, 0.25”-20	4	
4	7950160143	Flatwasher, 0.38” ID	8	

Eastern Wrecker Sales Inc

FORK RISER STORAGE INSTALLATION

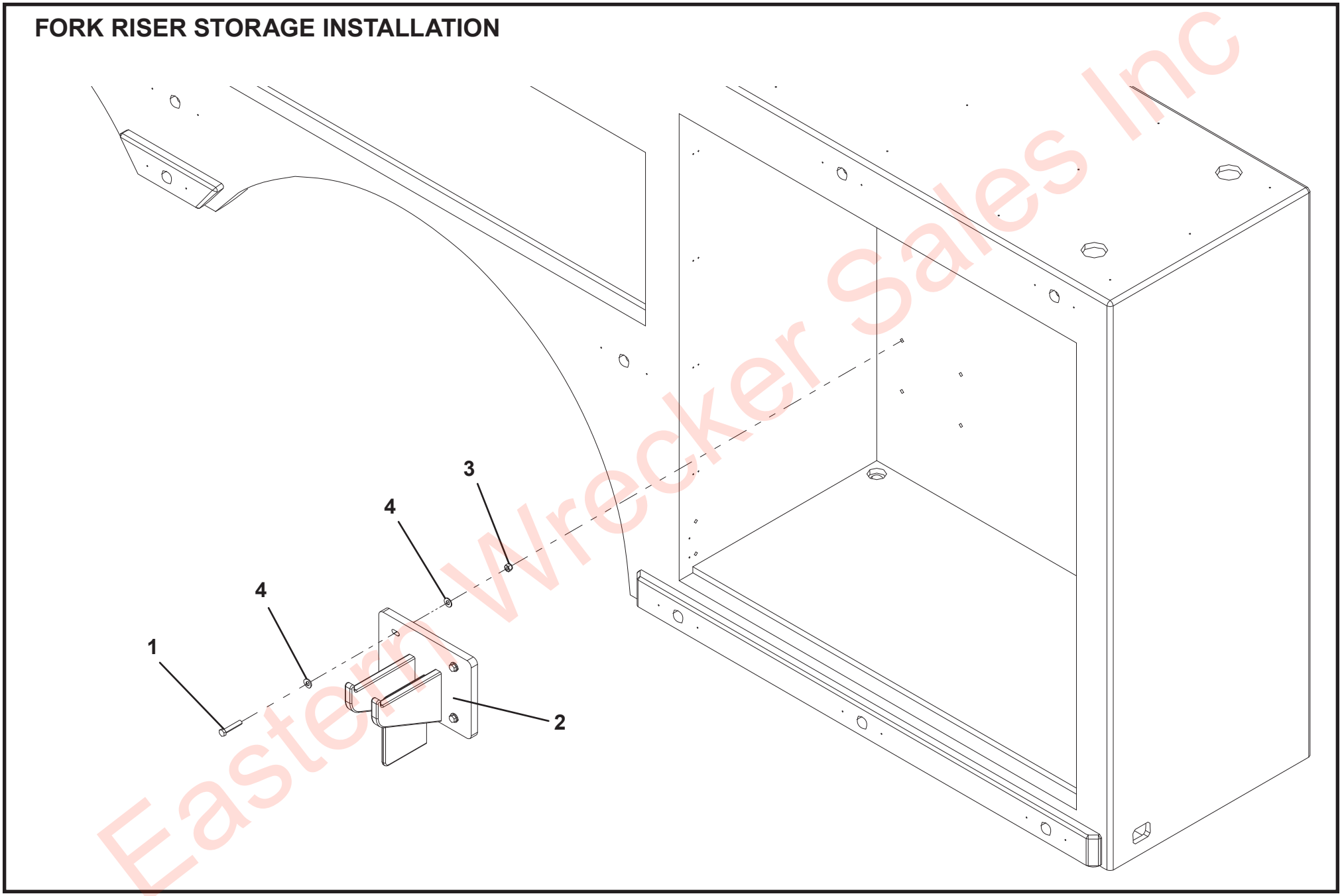

Eastern Wrecker Sales Inc

GRIZZLY BAR STORAGE - TANDEM

ITEM	PART NO.	DESCRIPTION	QTY	REV
	1001210746	Grizzly Bar Storage - Tandem	Ref	A
1	1001175059	Clamp	5	
2	7114141018	Screw, 0.25” - 20NC x 1.25”	13	
3	1001183037	Nut, 0.25” - 20NC	13	
4	1001183038	Bracket	1	
5	7950140143	Flatwasher, 0.25” ID	3	

Eastern Wrecker Sales Inc

GRIZZLY BAR STORAGE - TANDEM

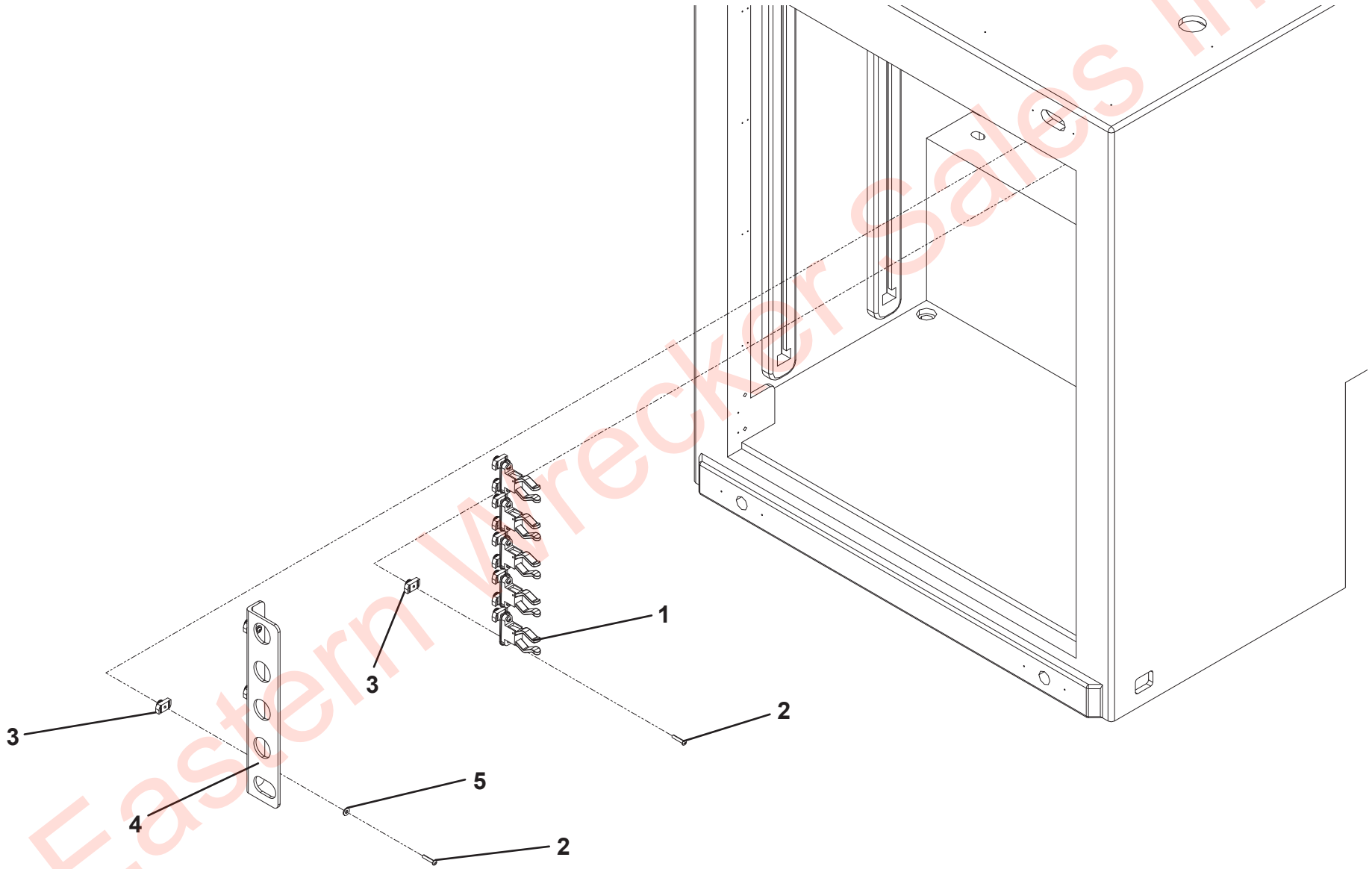

Eastern Wrecker Sales Inc

GRIZZLY BAR STORAGE - TRI-AXLE

ITEM	PART NO.	DESCRIPTION	QTY	REV
	1001210747	Grizzly Bar Storage - Tri-Axle	Ref	A
1	0751406	Screw	2	
2	0751408	Screw	2	
3	1001174992	Bracket	1	
4	1001175059	Clamp	5	
5	1001183037	Spring Nut, 0.25” - 20NC	10	
6	1001212194	Angle Bracket	1	
7	7114141018	Screw, 0.25” - 20NC x 1.25”	10	
8	7950140143	Flatwasher, 0.25” ID	2	

Eastern Wrecker Sales Inc

GRIZZLY BAR STORAGE - TRI-AXLE

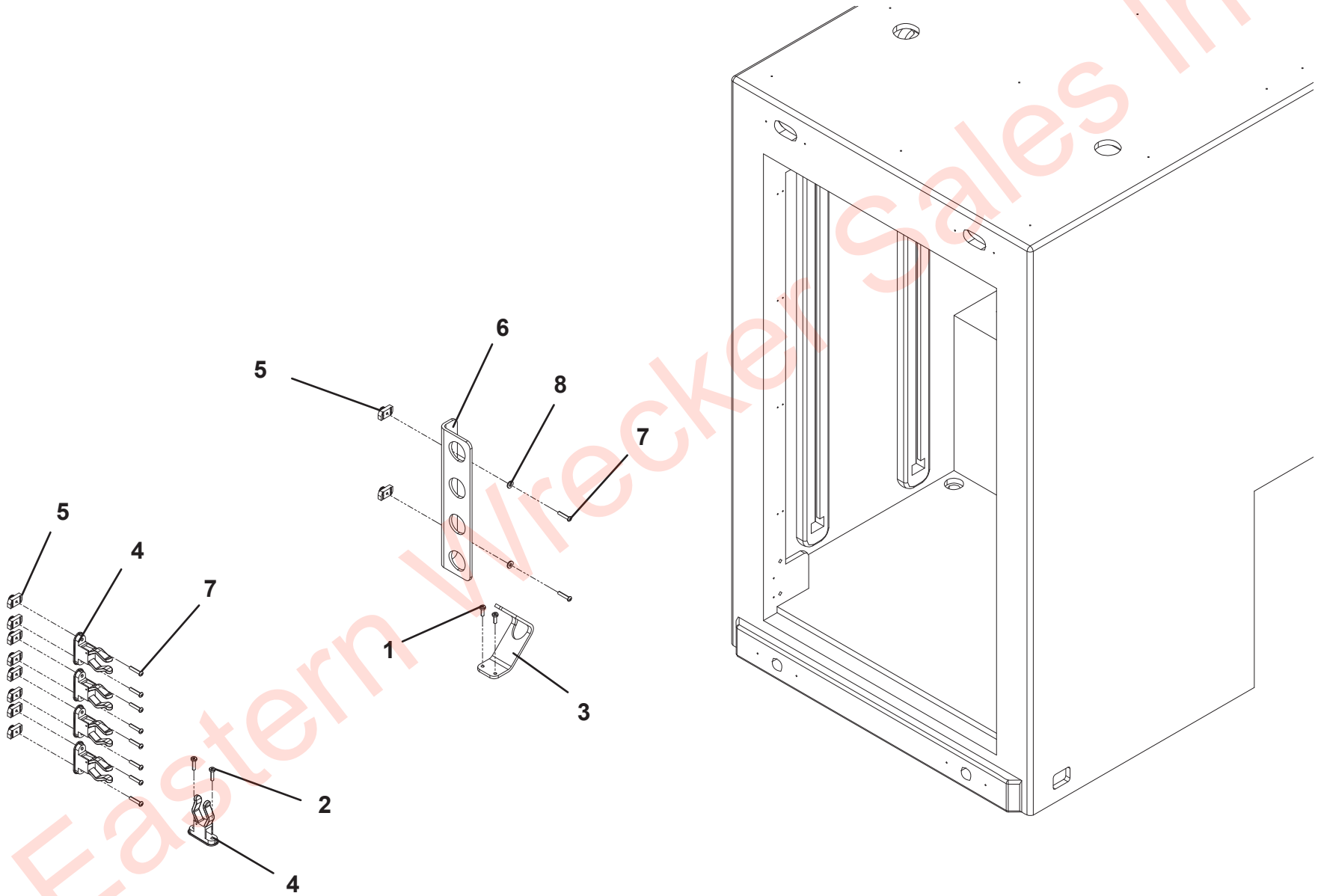

Eastern Wrecker Sales Inc

BROOM STORAGE

ITEM	PART NO.	DESCRIPTION	QTY	REV
	1001207496	Broom Storage	Ref	A
1	1001195257	Screw, 0.25” x 0.50”	4	
2	1001207300	Bracket	1	
3	7950140143	Flatwasher, 0.25” ID	4	

Eastern Wrecker Sales Inc

BROOM STORAGE

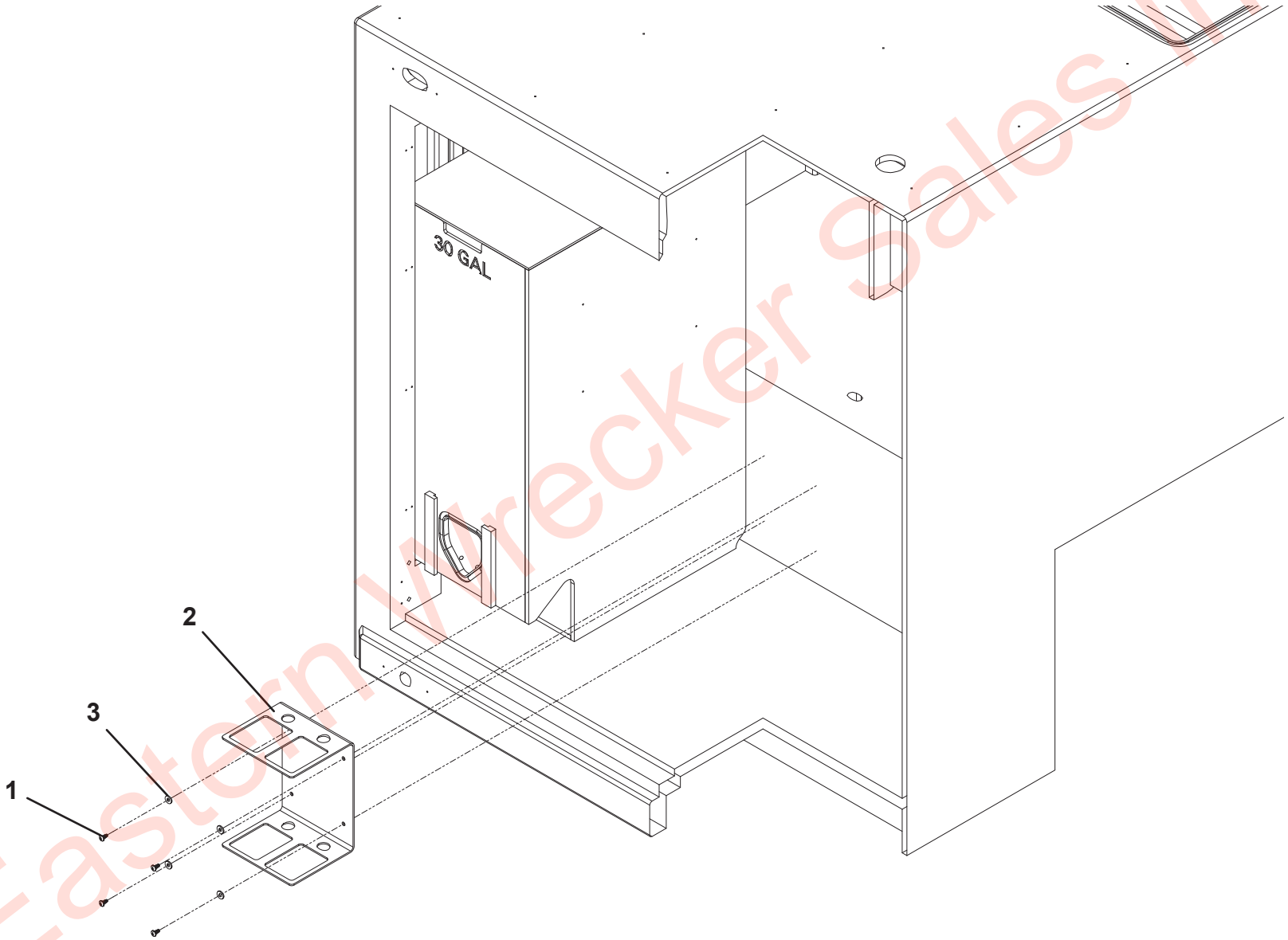

Eastern Wrecker Sales Inc

STRAP STORAGE - TANDEM

ITEM	PART NO.	DESCRIPTION	QTY	REV
	1001207593	Strap Storage - Tamdem	Ref	A
1	1001168545	Screw, 0.38” x 1.25”	4	
2	1001208651	Organizer - Tandem	1	
3	7950160143	Flatwasher, 0.38” ID	4	

Eastern Wrecker Sales Inc

STRAP STORAGE - TANDEM

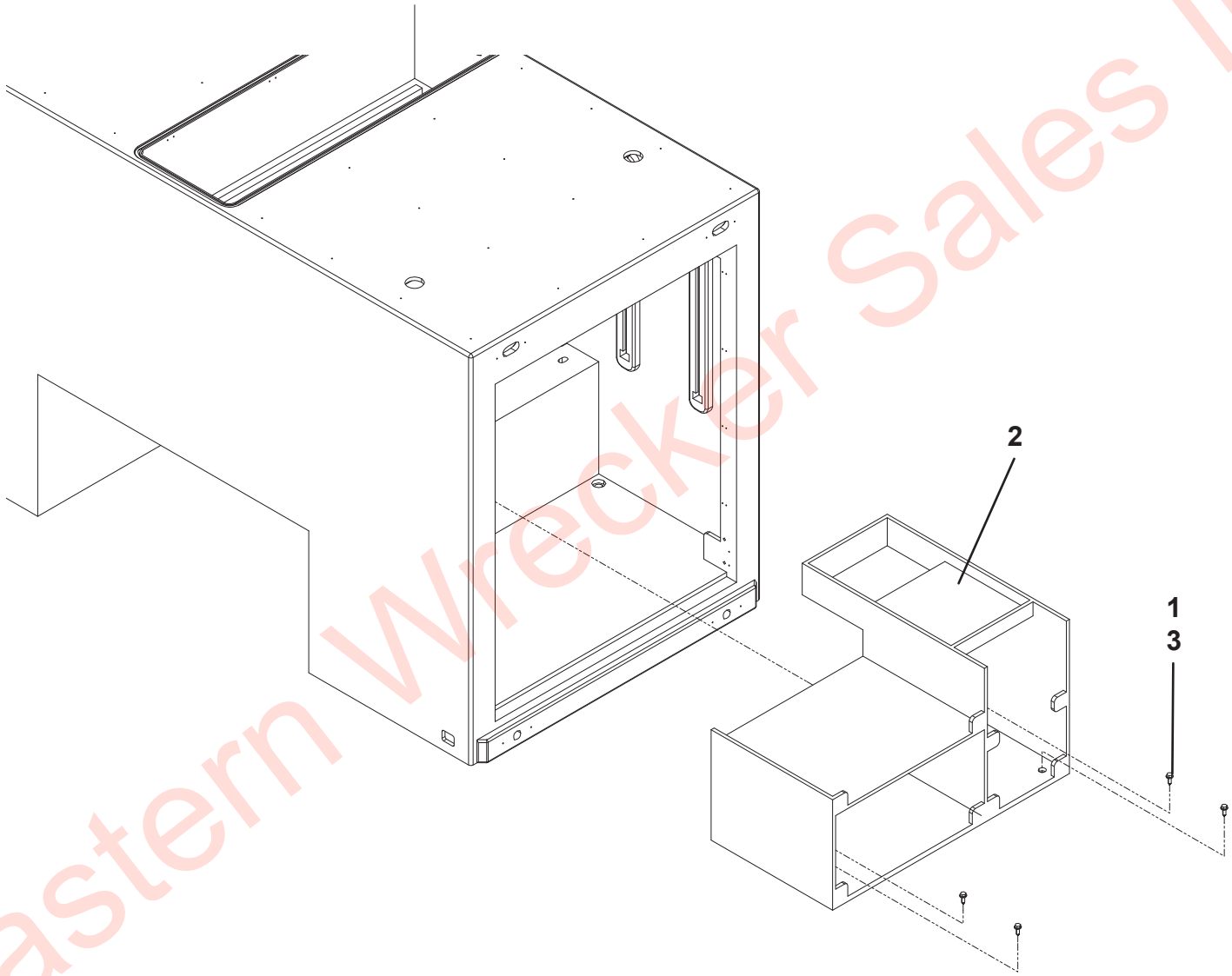

Eastern Wrecker Sales Inc

STRAP STORAGE - TRI-AXLE

ITEM	PART NO.	DESCRIPTION	QTY	REV
	1001208637	Strap Storage - Tri-Axle	Ref	A
1	1001168545	Screw, 0.38” x 1.25”	4	
2	1001208650	Organizer - Tri-Axle	1	
3	7950160143	Flatwasher, 0.38” ID	4	

Eastern Wrecker Sales Inc

STRAP STORAGE - TRI-AXLE

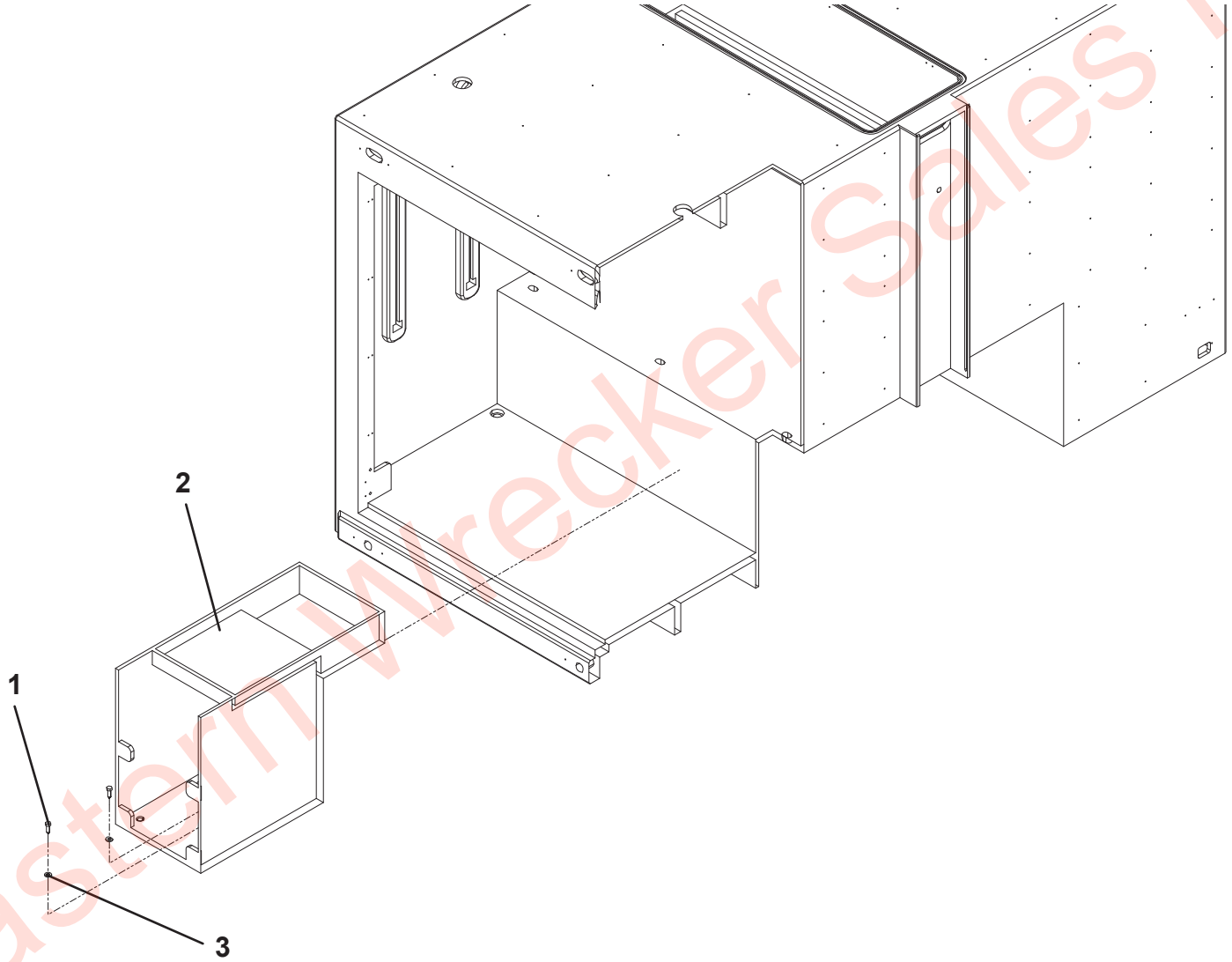

Eastern Wrecker Sales Inc

CRIBBING STORAGE

ITEM	PART NO.	DESCRIPTION	QTY	REV
	1001207510	Cribbing Storage	Ref	B
1	1001194676	Screw, 0.25” x 0.75”	2	
2	1001207509	Plate	2	
3	1001207539	Adjustment Mount	1	
4	1001195257	Screw, 0.25” x 0.50”	4	
5	7950140143	Flatwasher, 0.25” ID	4	

Eastern Wrecker Sales Inc

CRIBBING STORAGE

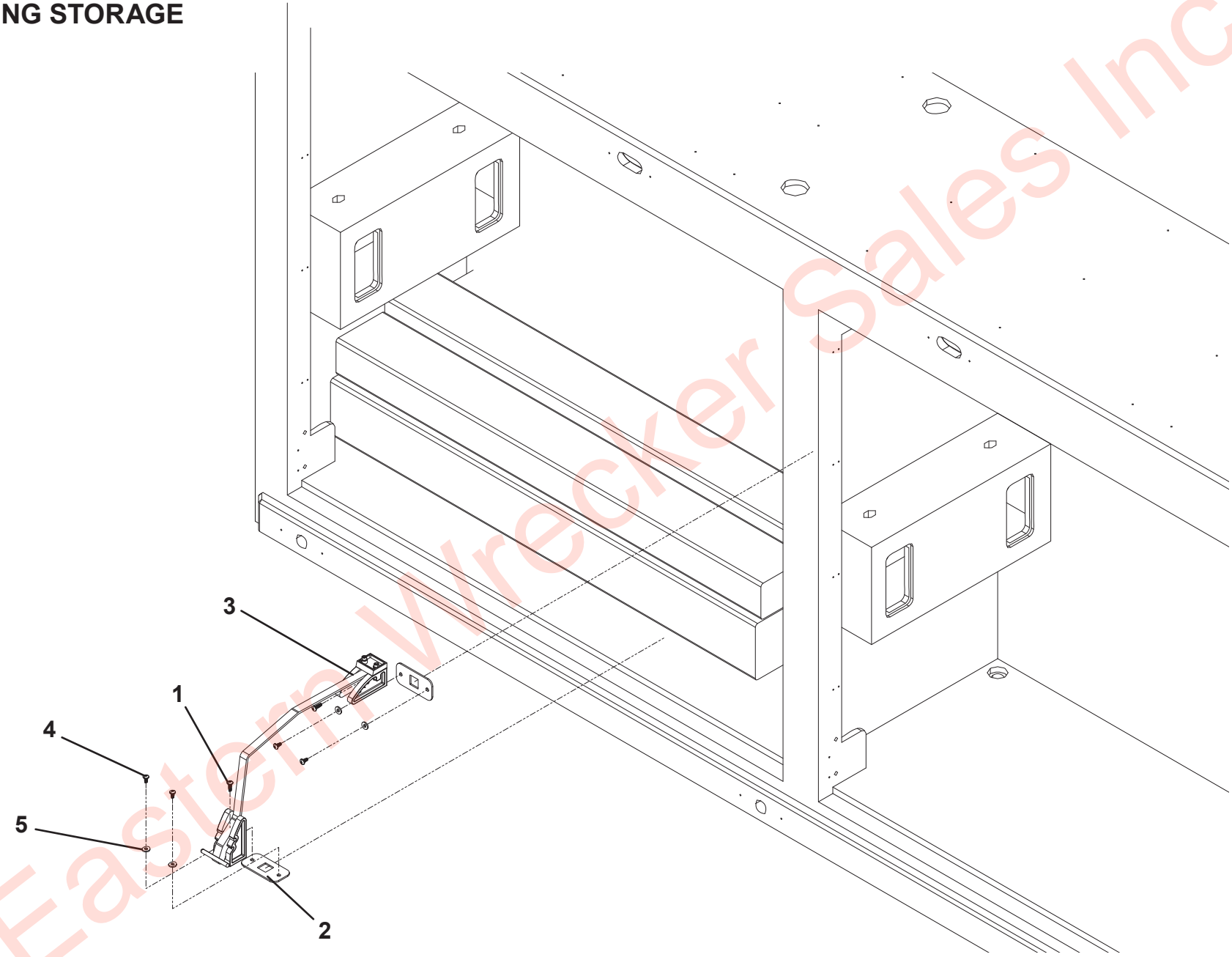

Eastern Wrecker Sales Inc

SPILL KIT

ITEM	PART NO.	DESCRIPTION	QTY	REV
	1001210748	Spill Kit	Ref	A
1	1001183152	Bracket	1	
2	7950160143	Flatwasher, 0.38” ID	2	
3	1001168428	Screw, 0.38” x 1.00”	2	

Eastern Wrecker Sales Inc

SPILL KIT

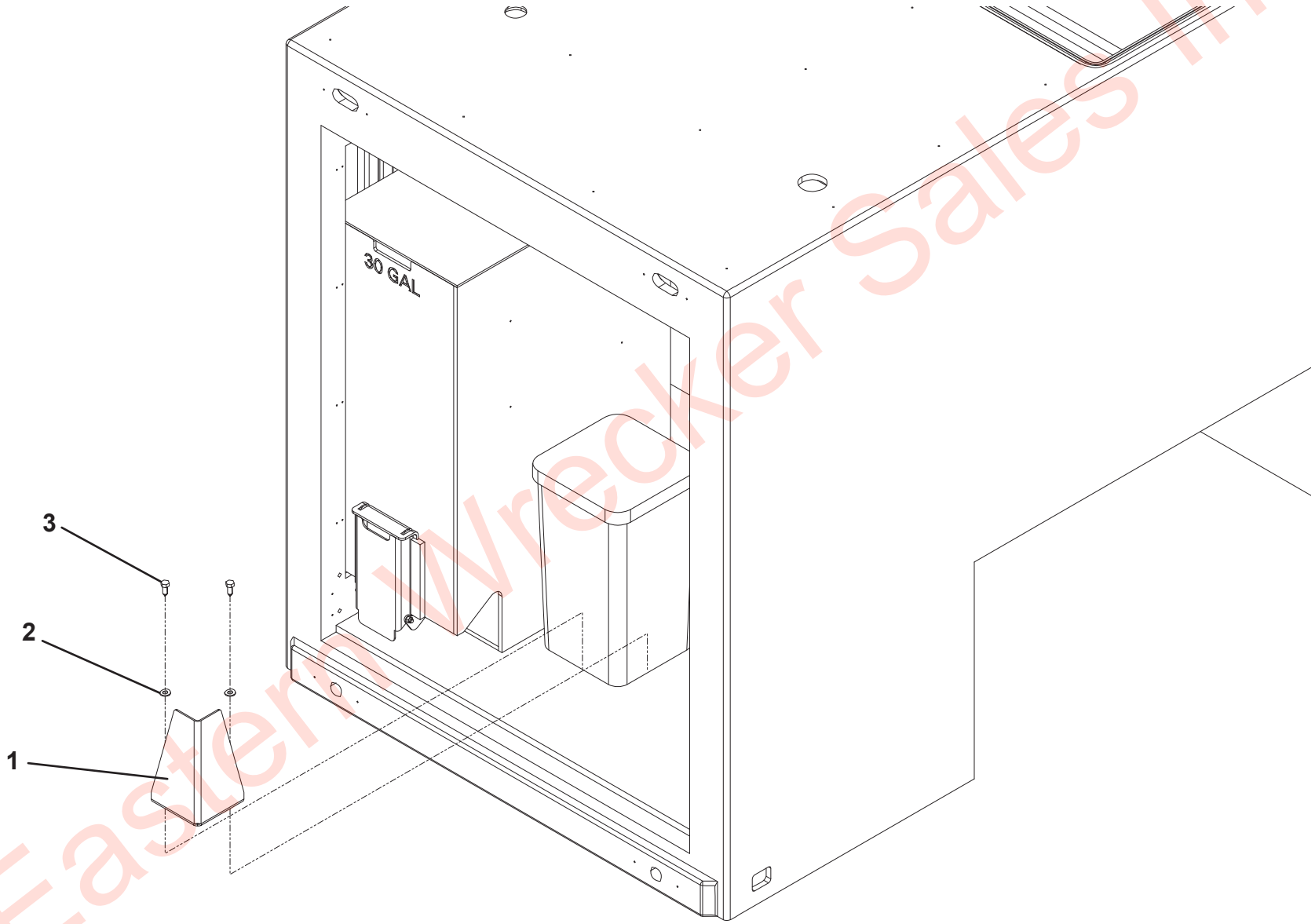

Eastern Wrecker Sales Inc

STORAGE SHELF INSTALLATION

ITEM	PART NO.	DESCRIPTION	QTY	REV
	1001214303	Storage Shelf Installation	Ref	A
1	1001169083	Screw, 0.38” - 16NC x 2.00”	4	
2	1001214265	Shelf 48”	1	
	1001214301	Shelf 36”	2	
3	1001214266	Mount	4	
4	1001214267	Washer, 0.38” ID	4	
5	1001166644	Nut, 0.38” - 16NC	4	

Eastern Wrecker Sales Inc

STORAGE SHELF INSTALLATION

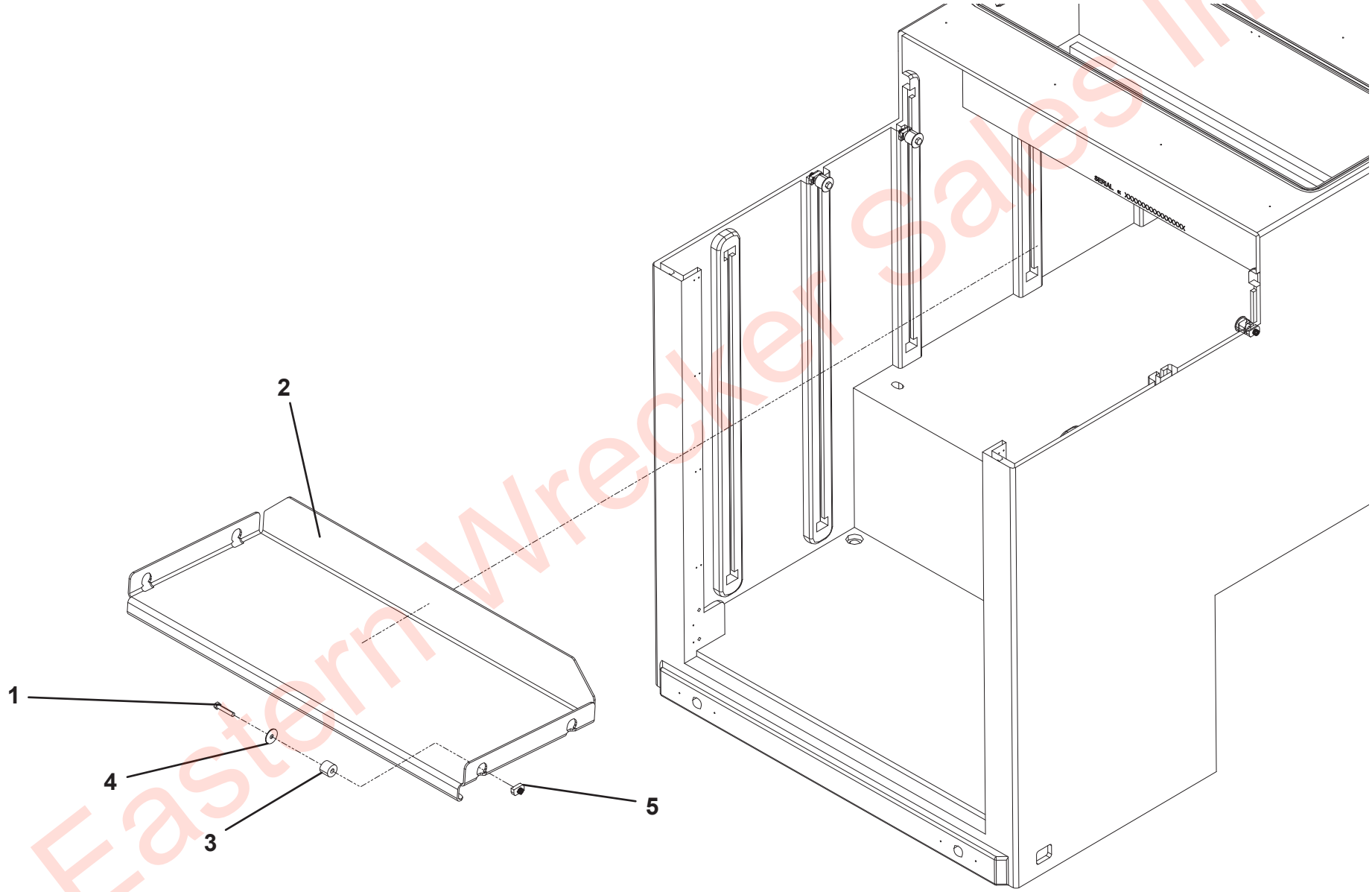

Eastern Wrecker Sales Inc

SINGLE SPREADER BAR STORAGE

ITEM	PART NO.	DESCRIPTION	QTY	REV
	1001210750	Single Spreader Bar Storage	Ref	B
1	1001160799	Bracket	1	
2	1001166974	Washer, 0.38” ID	7	
3	1001168544	Capscrew, 0.38” - 16NC x 1.75”	2	
4	1001168993	Capscrew, 0.38” - 16NC x 1.50”	7	
5	1001174138	Support	1	
6	1001174140	Support	2	
7	1001191613	Bracket	1	
8	1001195257	Screw, 0.25” x 0.50”	4	
9	1001211394	Support	1	
10	7660162601	Locknut, 0.38” - 16NC	9	
11	7790141251	Screw, 0.25” x 0.75”	2	
12	7950140143	Flatwasher, 0.25” ID	2	
13	7950160143	Flatwasher, 0.38” ID	18	

Eastern Wrecker Sales Inc

SINGLE SPREADER BAR STORAGE

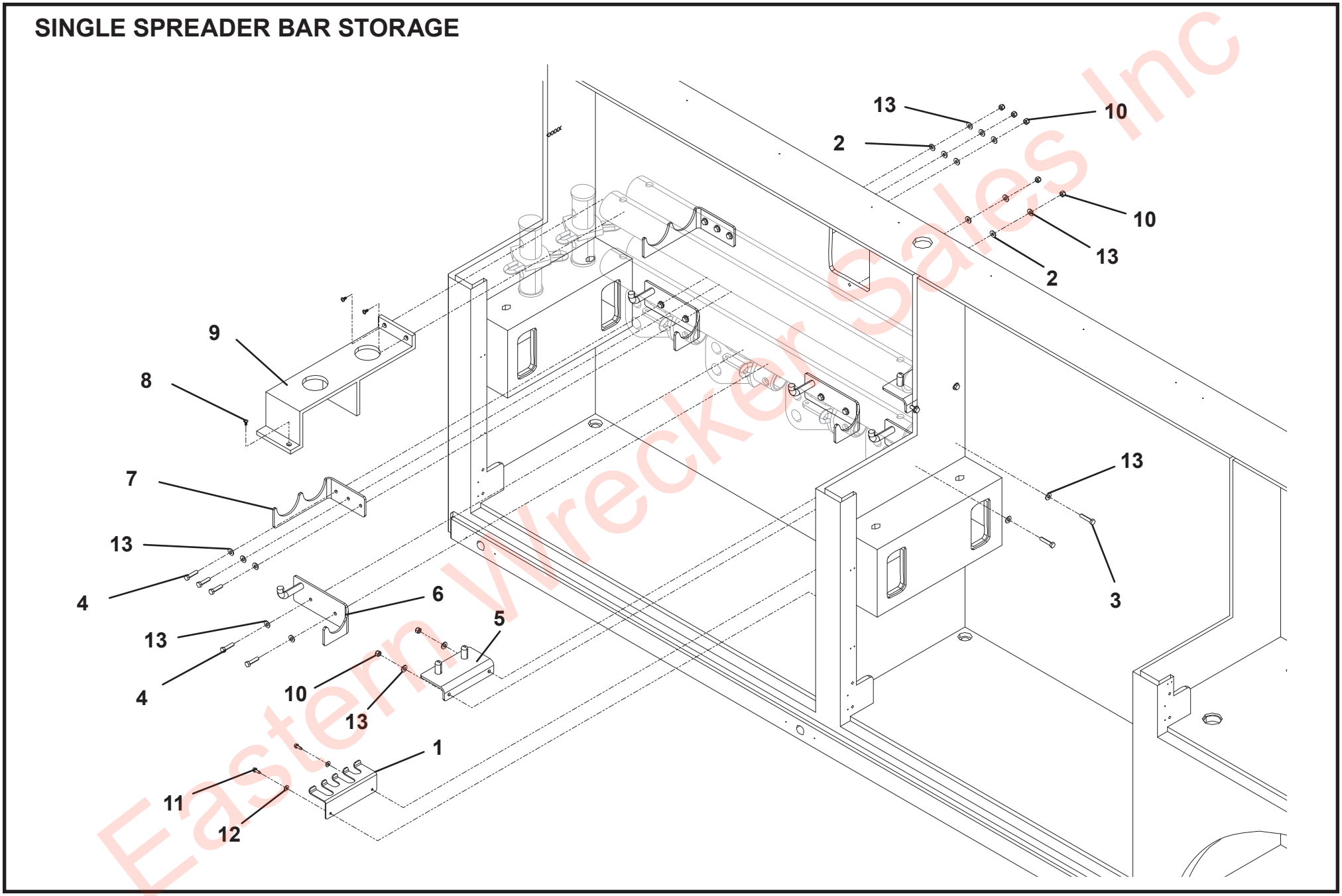

Eastern Wrecker Sales Inc

DOUBLE SPREADER BAR STORAGE

ITEM	PART NO.	DESCRIPTION	QTY	REV
	1001207548	Double Spreader Bar Storage	Ref	B
1	1001160799	Bracket	2	
2	1001166974	Washer, 0.38” ID	14	
3	1001168544	Capscrew, 0.38” - 16NC x 1.75”	4	
4	1001168993	Capscrew, 0.38” - 16NC x 1.50”	14	
5	1001174138	Support	2	
6	1001174140	Support	4	
7	1001191613	Bracket	2	
8	1001195257	Screw, 0.25” x 0.50”	3	
9	1001211394	Support	1	
10	7660162601	Locknut, 0.38” - 16NC	18	
11	7790141251	Screw, 0.25” x 0.75”	4	
12	7950140143	Flatwasher, 0.25” ID	4	
13	7950160143	Flatwasher, 0.38” ID	36	

Eastern Wrecker Sales Inc

DOUBLE SPREADER BAR STORAGE

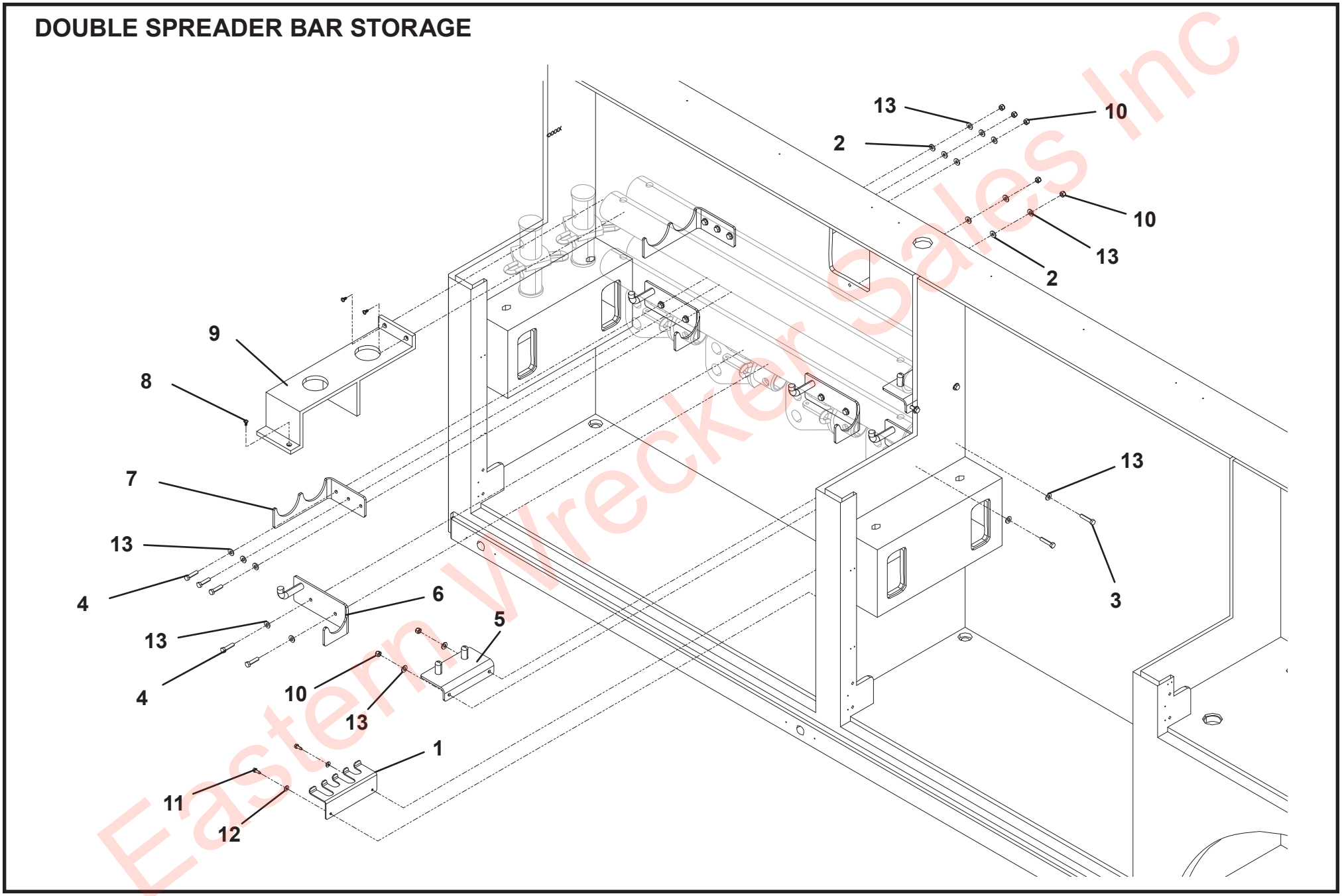

Eastern Wrecker Sales Inc

SPREADER BAR KIT - 1001175920

ITEM	PART NO.	DESCRIPTION	QTY	REV
	1001175920	Spreader Bar Kit	Ref	C
1	70050922	Center Bar	1	
2	70050923	Spreader Bar Tube	2	
3	70050924	Spreader Bar Ends	2	
4	70050925	Pin	4	

Eastern Wrecker Sales Inc

SPREADER BAR KIT - 1001175920

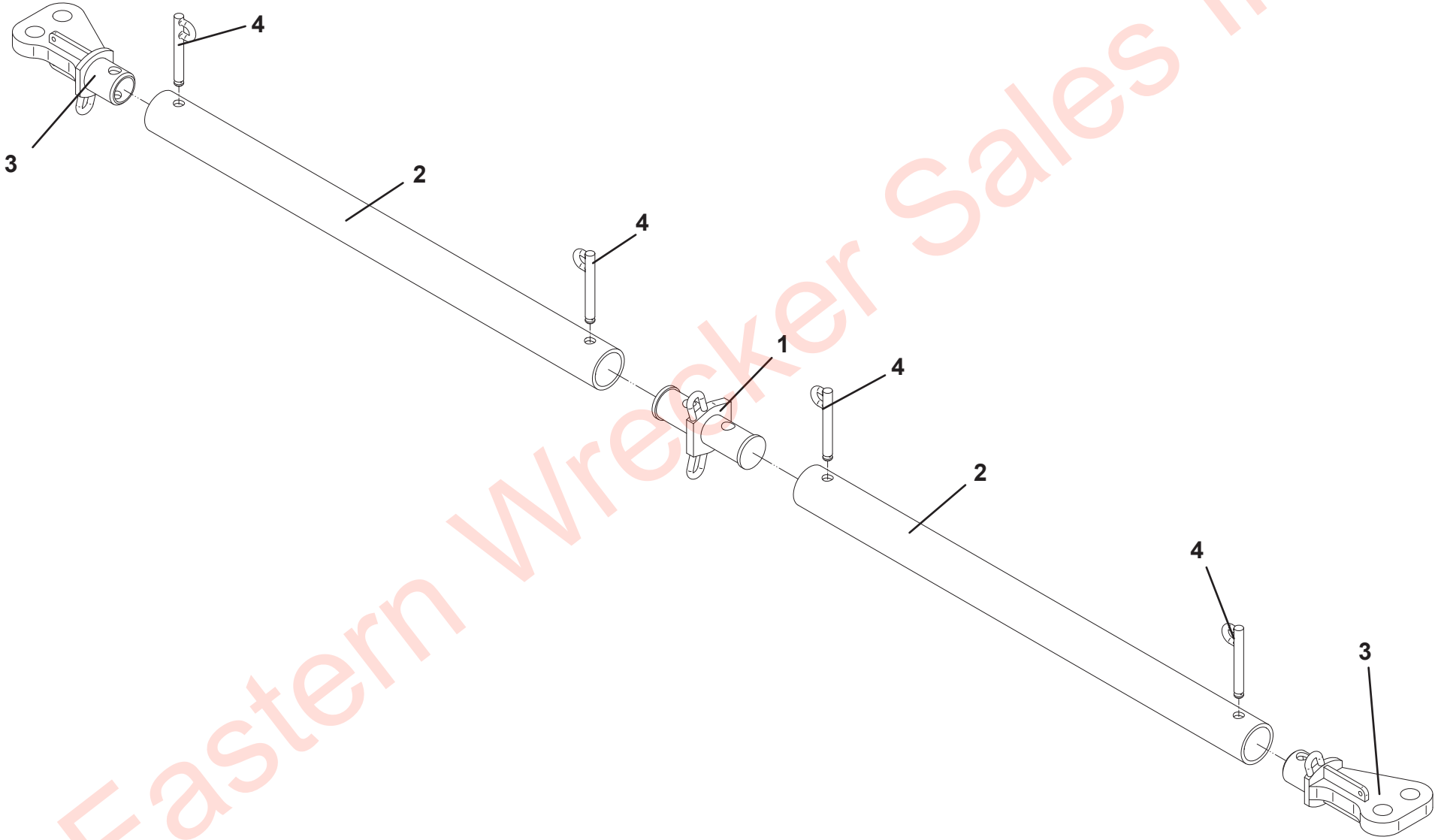

Eastern Wrecker Sales Inc

SPREADER BAR ACCESSORIES - 1001174493

ITEM	PART NO.	DESCRIPTION	QTY	REV
	1001174493	Spreader Bar Accessories	Ref	E
1	70050831	Pallet Lifting Jaw	1	
2	70050832	42 Gallon Demo Bag	2	
3	70050833	Poly Tarp	2	
4	70050834	Green Eye and Eye Round Sling, 96"	4	
5	70050835	Green Round Sling Hook	4	
6	70050836	Recovery Chain, 0.38" x 10' - 8,800 LB	1	
7	70050837	Recovery Chain Hook One End 0.5" x 6'	2	
8	70050838	Recover Chain Hook	2	
9	70050839	Shackle	4	
10	70050840	Blue Round Sling 10'	2	
11	70050841	Skate	2	
12	70050922	Center Bar	1	
13	70050923	Spreader Bar Tube	2	
14	70050924	Spreader Bar Ends	2	
15	70050925	Pin	4	

Eastern Wrecker Sales Inc

SPREADER BAR ACCESSORIES - 1001174493

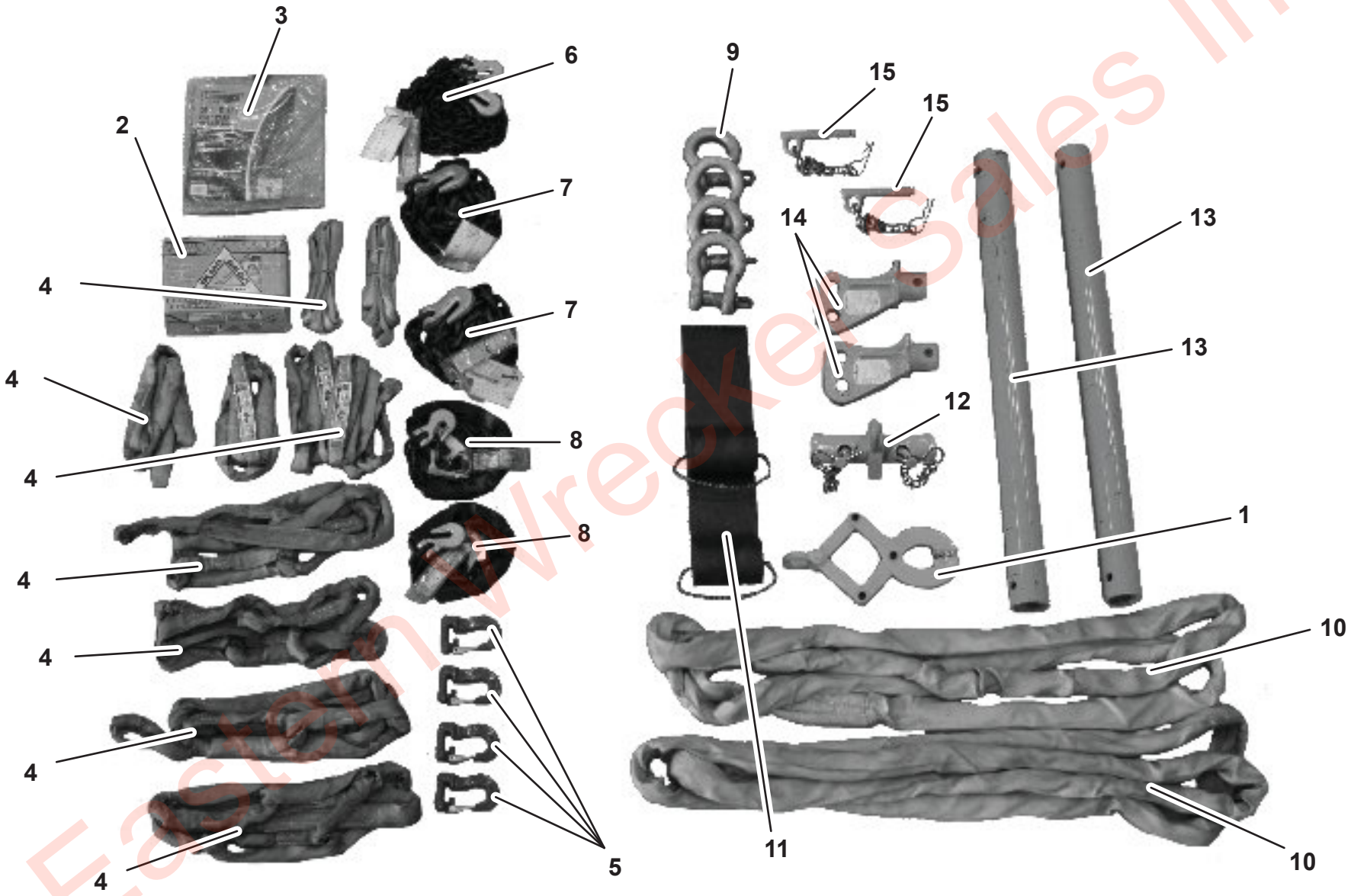

Eastern Wrecker Sales Inc

RUGGED ACCESSORY PACKAGE - 1001174490

ITEM	PART NO.	DESCRIPTION	QTY	REV
	1001174490	Rugged Accessory Package	Ref	C
1	70050842	Snatch Block, 0.875" x 8.00"	2	
2	70050843	Recovery Chain, 0.38" x 10'	1	
3	70050844	Recovery Chain, 0.50" x 2'	2	
4	70050845	Recovery Sling, 0.50"	2	
5	70050846	Recover Chain Locking Clevis, 0.50" x 10'	4	
6	70050847	Copper Ground Stake	2	
7	70050848	Brass Mallet	1	
8	70050849	Ground Wire	3	

Eastern Wrecker Sales Inc

RUGGED ACCESSORY PACKAGE - 1001174490

Eastern Wrecker Sales Inc

TOW SUPPORT by JERR-DAN

Phone (800) 926-9666

Eastern Wrecker Sales Inc

5376000186- A