825E/835E/845E
Detachable Semitrailer
Parts Manual

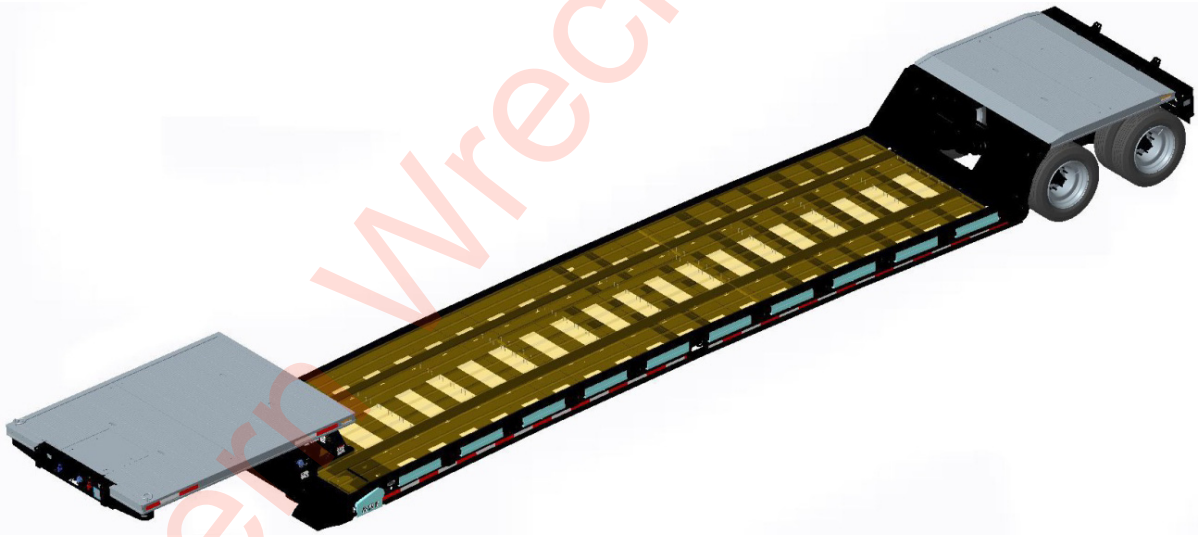

LANDOLL CORPORATION
1900 North Street
Marysville, Kansas 66508
(785) 562-5381
800-428-5655 ~ WWW.LANDOLL.COM

F-845-1017

Eastern Wrecker Sales Inc

Manuals for the 800E Series Detachable Semitrailer

MANUAL NUMBER	MANUAL NAME
F-844	Detachable Semitrailer Operator's Manual
F-845	Detachable Semitrailer Parts Manual

Eastern Wrecker Sales Inc

Table of Contents

1 Illustrated Parts list

Instructions For Ordering Parts **1-1**

Decals **1-2**
Decal Installation & Arrangement 1-5

Gooseneck Assemblies **1-6**
General Assembly - 835E 1-8
Electrical System - 835E 1-11
Air System - 835E 1-14
Hydraulic & Grease System - 835E 1-18

Gooseneck Assemblies - 835HD/845HD **1-20**
General Assembly - 835HD/845HD 1-22
Electrical System - 835HD/845HD 1-25
Air System - 835HD/845HD 1-28
Hydraulic & Grease System - 835HD/845HD 1-32
Hydraulic Cylinder 6 X 30 1-33
Hydraulic Cylinder 7 X 34 1-34
Three Spool Valve 1-35

Front Flip Assemblies - 835HD/845HD **1-36**
Front Flip Assembly - 835HD/845HD 1-36

Frame Assemblies **1-38**
General Assembly - 825E 1-39
Electrical System - 825E 1-41
Air Brake System - 825E 1-43
Air Ride Suspension - 825E 1-45
Grease Assembly - 825E 1-47
Tire Inflation System - 825E 1-49

Frame Assemblies - 835E Ag Tandem **1-50**
General Assembly - 835E Ag Tandem 1-51
Electrical System - 835E Ag Tandem 1-53
Air Brake System - 835E Ag Tandem 1-55
Air Ride Suspension - 835E Ag Tandem 1-59
Grease Assembly - 835E Ag Tandem 1-61
Tire Inflation System - 835E Ag Tandem 1-63

Frame Assemblies - 835E HD Ag Triple **1-64**
General Assembly - 835E HD Ag Triple 1-65
Electrical System - 835E HD Ag Triple 1-67
Standard Air Brake System - 835E HD Ag Triple 1-69
Lift Air Brake System - 835E HD Ag Triple 1-71
Standard Air Ride Suspension - 835E HD Ag Triple 1-73
Lift Air Ride Suspension - 835E HD Ag Triple 1-75
Grease Assembly - 835E HD Ag Triple 1-77
Tire Inflation System - 835E HD Ag Triple 1-79

Frame Assemblies - 835E Construction **1-80**
General Assembly - 835E Construction 1-81

Eastern Wrecker Sales Inc

Electrical System - 835E Construction 1-85
Air Brake System - 835E Construction 1-87
Air Ride Suspension - 835E Construction 1-89
Grease Assembly - 835E Construction 1-91
Tire Inflation System - 835E Construction 1-93

Frame Assemblies - 845E HD Ag Tandem 1-94
General Assembly - 845E HD Ag Tandem 1-95
Electrical System - 845E HD Ag Tandem 1-97
Air Brake System - 845E HD Ag Tandem 1-99
Air Ride Suspension - 845E HD Ag Tandem 1-101
Grease Assembly - 845E HD Ag Tandem 1-103
Tire Inflation System - 845E HD Ag Tandem 1-105

Brake & Air Control Kits 1-106
ABS Brake Kit - Rockwell 1-106
Air Control Kit 1-107
Manual Air Height Control Assembly 1-109
Suspension Hanger RLU 250 FMT (825/835/845 Front) 1-111
Suspension Hanger - RLU 250-9-4 1-113

Axle & Brake Assemblies 1-114
Axle and Brake Assembly - Dexter 16-1/2” x 7” 1-115
Outboard Pilot Mount Hub and Drum Assembly 1-117

Flip Assemblies 1-118
General Assembly 1-119
Electrical System 1-121
Air Brake System 1-122
Air Ride Suspension 1-123
Grease Assembly 1-124
Tire Inflation System 1-125

Hydraulic Flip Assemblies 1-126
Frame & Cylinder Assembly 1-127
Hydraulic System 1-129
Air System 1-130
Hydraulic Cylinder - 4 X 20 1-131

Bed Installations 1-132
Bed Installation W/ Trunnion 1-133
Bed Installation Weight Package W Trunnion 1-135
Bed Installation W/ Trunnion and Gooseneck 1-137
Bed Installation - Flip Axle 1-139

Pullout Extensions 1-140
Pullout Extension Installation 1-141

Swingout Installation 1-142
Swingout Installation 1-143

Winches 1-144
Winch Installation - 12K & 20K (BRADEN) 1-146
Winch Items - 12,000 Lb. (BRADEN) 1-149
Winch Items - 20,000 Lb. (BRADEN) 1-153
Winch Motor Assembly 1-155
Winch Installation - 2 Speed (WARN) 1-158
Winch Items - 20K 2 Speed (WARN) 1-160

Eastern Wrecker Sales Inc

Winch Items - 30K 2 Speed (WARN) 1-161
Winch Remote Installation 1-162
Receiver Transmitter - Macro Kar SL AX 1-163

Engine Assemblies - Option 1-164
42-11 Hp Honda Engine Drive Installation 1-166
Engine - 25 HP Upper Deck Package 1-172
Front Engine Mount Installation 1-175
Front Engine Mount Cover Installation 1-177
800 Engine Mount Installation 1-179

Fender Assemblies - Option 1-180
Black Poly Fender Installation - 2 & 3 Axle 1-180
Black Poly Fender Installation - Flip Axle 1-181
Gooseneck Fender Assembly 1-183

Lift Assemblies - Option 1-184
Lift Axle Flip Control Assembly (835) 1-185
Lift Control Installation - 3rd Raise/Lower (835) 1-188
Rear Suspension Air Lift Assembly 1-189

Light Installations - Options 1-190
Pullout Extension Mounted Light Package 1-191
Strobe Light - 800E Bumper 1-192
Strobe Light - Battery Backup Bumper 1-193
Strobe Light - Flip Axle Installation 1-194
S/T/T Light Installation (800E) 1-197
Web Mounted Four Corner Light Package 1-199

Ramps - Options 1-200
Ramp Assembly - Aluminum Beavertail 1-200
Ramp Assembly - Aluminum Trunnion 1-201
Ramp Assembly - Front Bi-Fold (835 Paver) 1-203
Ramp Assembly - Front Center (835 Paver) 1-205
Ramp Installation - Full Width Front (835) 1-207
Ramp Installation - Lift Assist (835E) 1-208
Ramp Installation 24’ - (835 Construction) 1-209
Ramp Lift Assembly (825E) 1-210

Misc Options 1-211
Air Weigh Scale Installation 1-211
Banner Flag Kit Assembly 1-212
Bolt-on D-ring Assembly 1-213
Bulkhead and Chain Rack Installation 1-215
Chain Rack Assembly 1-216
Gooseneck Mud Flap Installation 1-217
Gooseneck Toolbox Installation 1-219
Hydraulic Wet Kit 1-221
Pressure Gauge Installation 1-222
Slope Cover Assembly 1-223
Tire Inflation System 1-225
Thermalert Tire Inflation System 1-227
Tray Assembly 1-228

Eastern Wrecker Sales Inc

Eastern Wrecker Sales Inc

Instructions For Ordering Parts

ORDER PARTS FROM LANDOLL PARTS DISTRIBUTION CENTER

**** Repair parts must be ordered through an Authorized Dealer ****

PHONE NO: 1-800-423-4320 OR 1-785-562-5381 **FAX NO: 888-527-3909**
ORDER ONLINE: Dealer.landoll.com

IDENTIFICATION PLATE

The identification plate, which lists the model number and serial number, is located on the front of the frame **(See Figure 1-1)**

SERIAL NUMBER NOMENCLATURE

The serial number for the Model 825E/835E/845E Series Semitrailer is located on the identification plate.

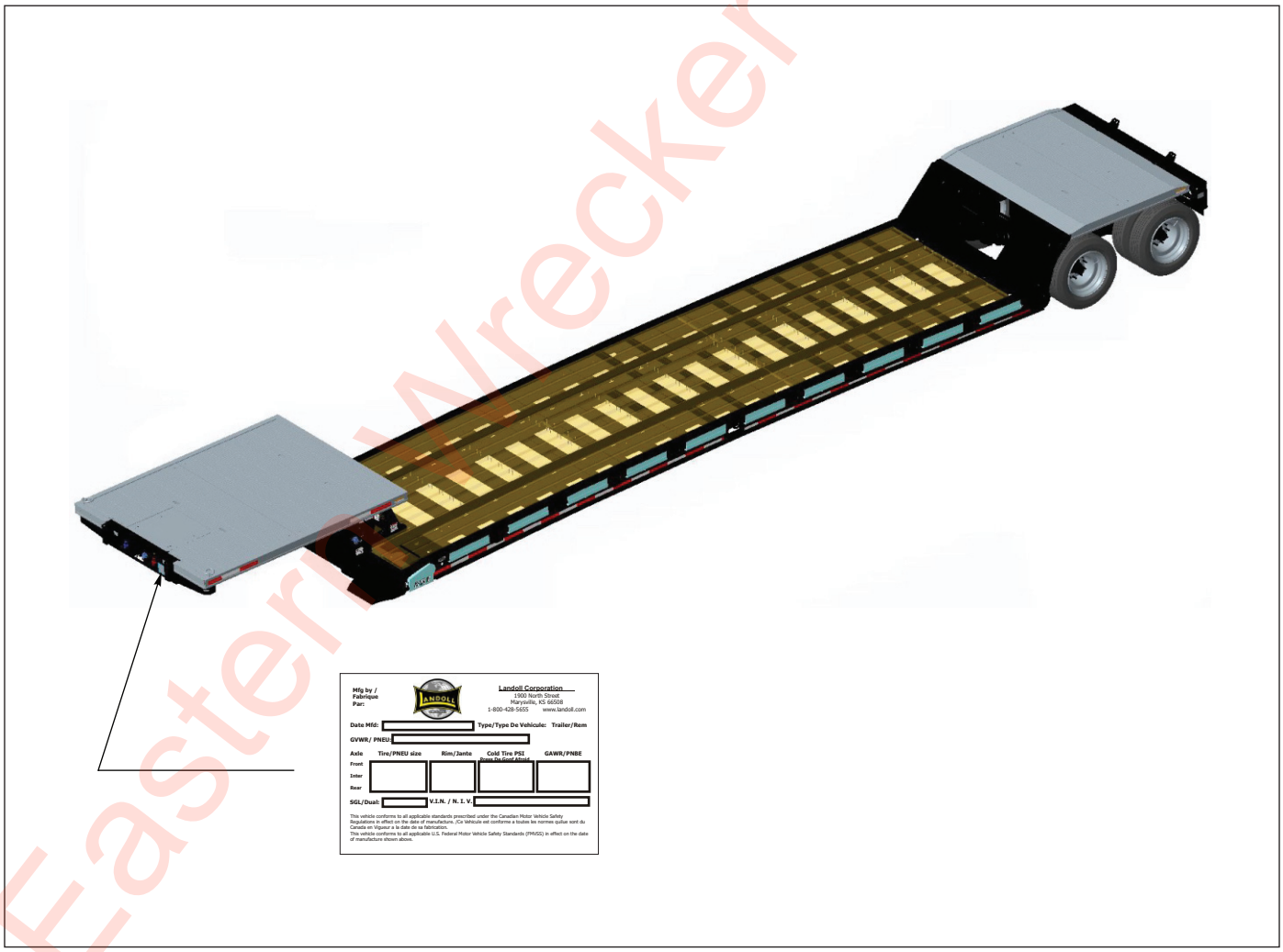

Figure 1-1: Identification Plate and Location

Eastern Wrecker Sales Inc

Decals

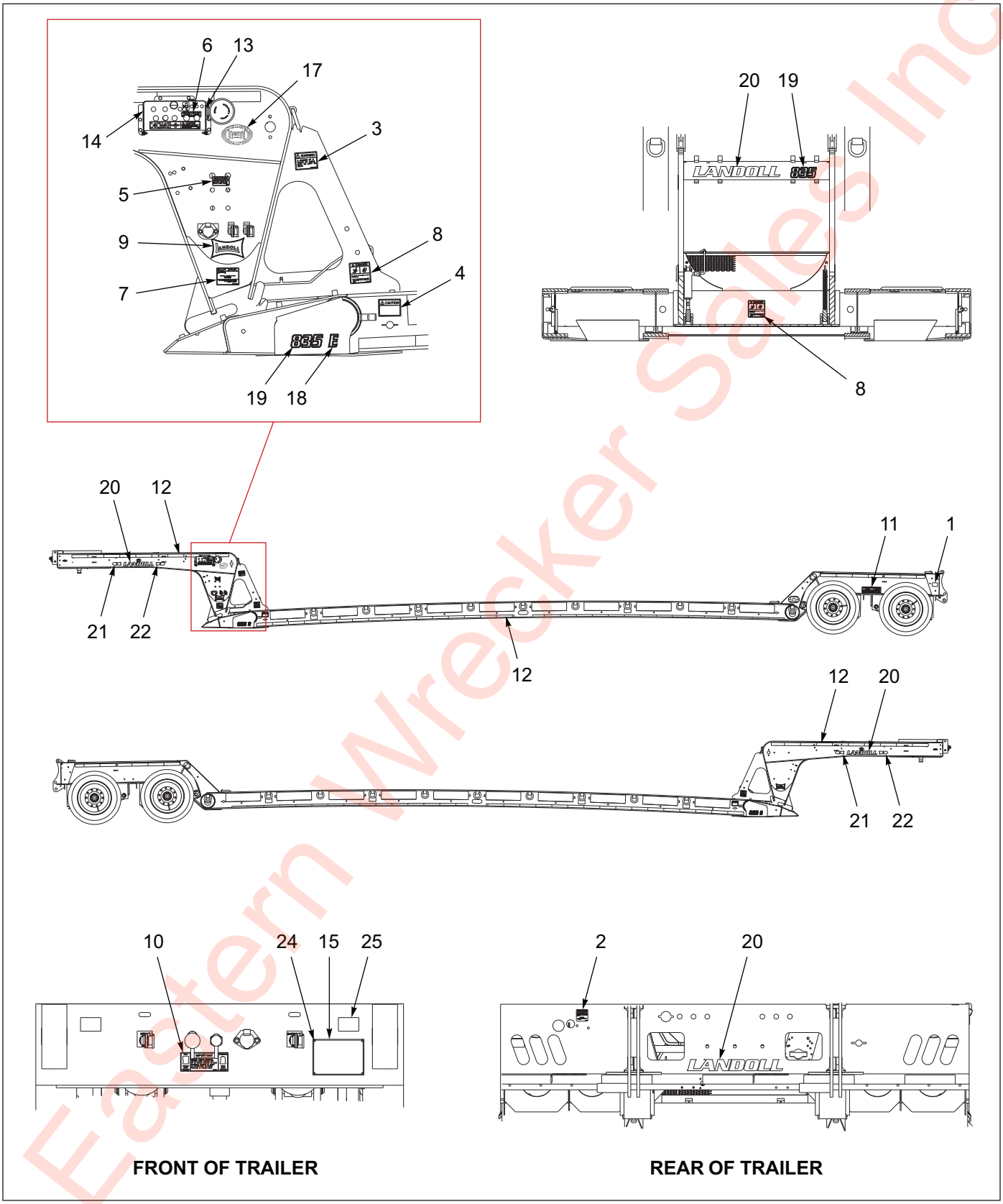

Figure 1-2: Decal Installation (825E/835E/845E Ag) (1 of 3)

Eastern Wrecker Sales Inc

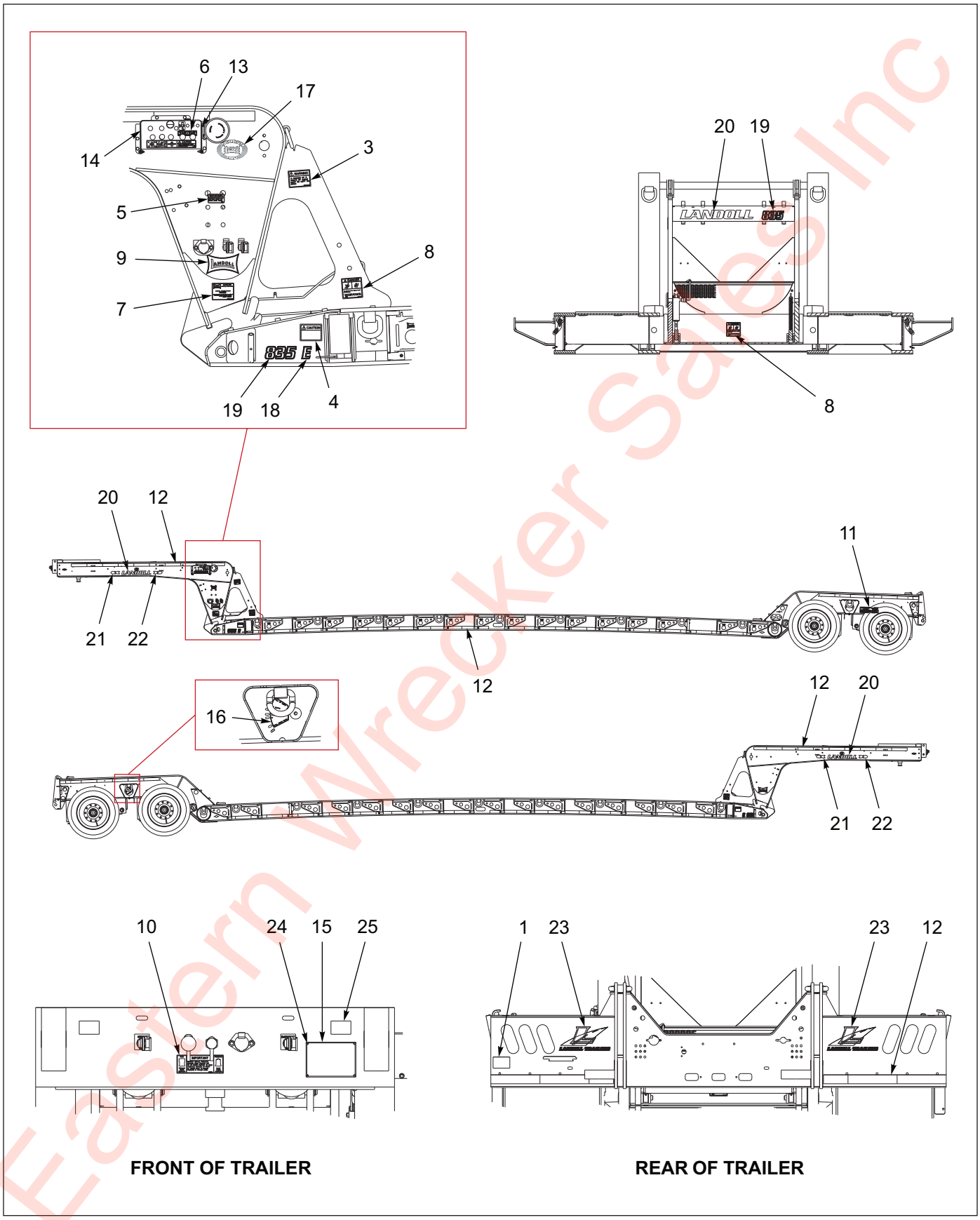

Figure 1-3: Decal Installation (835E Construction) (2 of 3)

Eastern Wrecker Sales Inc

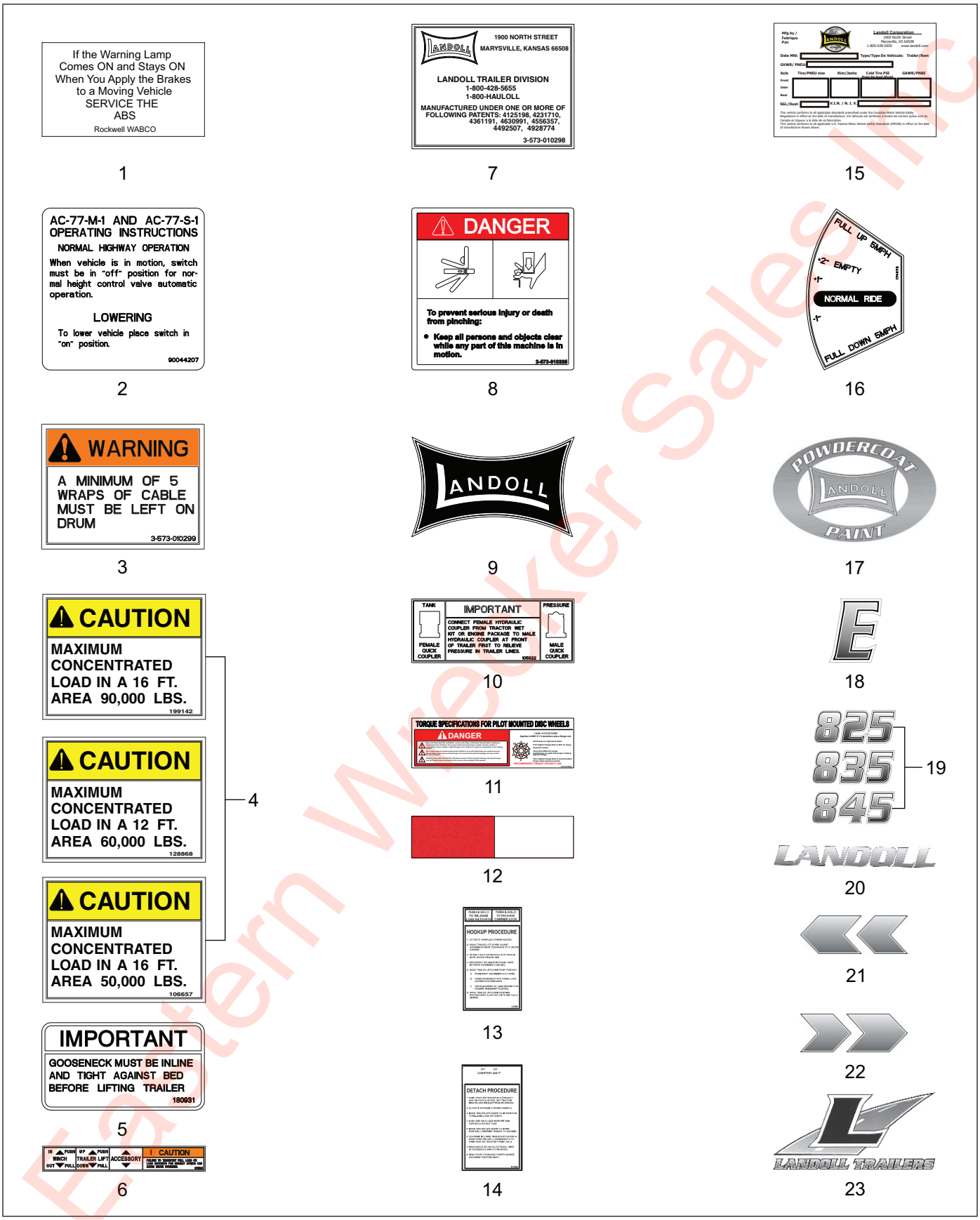

Figure 1-4: Decal Arrangement (3 of 3)

Eastern Wrecker Sales Inc

Decal Installation & Arrangement

ITEM	PART NO.	DESCRIPTION	QTY.
	199136	DECAL PLACEMENT 825E/835E/845E **(REF ONLY)**	
1	101855	WARNING LAMP LABEL,ABS	1
2	900-44-207	DECAL, RAISE AND LOWER	REF
3	3-573-010299	DECAL, WARNING WINCH CABLE	REF
4	106657	DECAL, CAUTION 50K/16 FT CONC LOAD **(825E)**	2
4	128868	DECAL, CAUTION 60K/12 FT CONC LOAD **(835E)**	2
4	199142	DECAL, CAUTION 90K/16 FT CONC LOAD **(845E)**	2
5	180931	DECAL, 800 G/N CONNECTION	1
6	105281	DECAL, 825 CONTROLS	1
7	3-573-010298	DECAL, PATENT	1
8	2-573-010335	DECAL, DANGER PINCHING	1
9	196172	DECAL BOWTIE SMALL	2
10	105822	DECAL, HYDRAULIC COUPLER	1
11	3-573-010210	DECAL TORQUE SPEC 8-10STU HUB	1
12	3-573-010377	DECAL,2"REFLEXITE TAPE,RD/WHT	1201
13	105283	DECAL 825 HOOKUP PROCEDURE	1
14	105282	DECAL, HYD COUPLER	1
15	155780	TRAILER VIN PLATE	1
16	174072	DECAL RIDE RAISE/LOWER	1
17	196173	DECAL POWDERCOAT SMALL	1
18	199135	DECAL, E 2-1/2	2
19	199141	DECAL, 825 REFLECTIVE 2-1/2"	3
19	199140	DECAL, 835 REFLECTIVE 2-1/2"	3
19	199132	DECAL, 845 REFLECTIVE	3
20	196167	DECAL LANDOLL SMALL	3
21	196168	DECAL ARROW SMALL 2LH	2
22	196169	DECAL ARROW SMALL 2RH	2
23	196177	DECAL HIGHWAY L LARGE	2
24	12420301-017	RIVET,BLIND .156 X 1/4 GRIP	4
25	202578	REFLEXITE WHITE 3" LENGTH	2

Eastern Wholesale Sales Inc

Gooseneck Assemblies

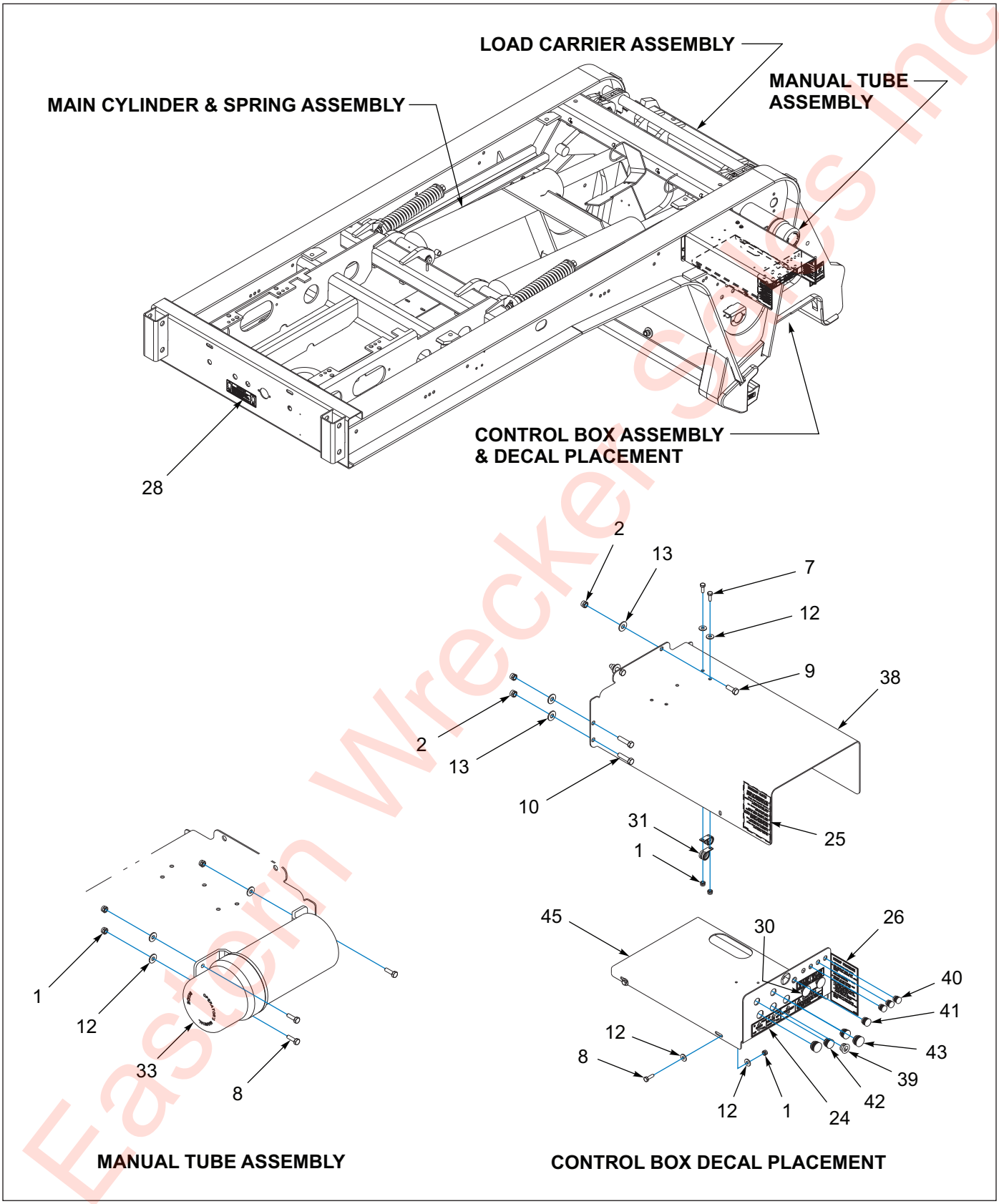

Figure 1-5: General Assembly - 835E (1 of 2)

Eastern Wrecker Sales Inc

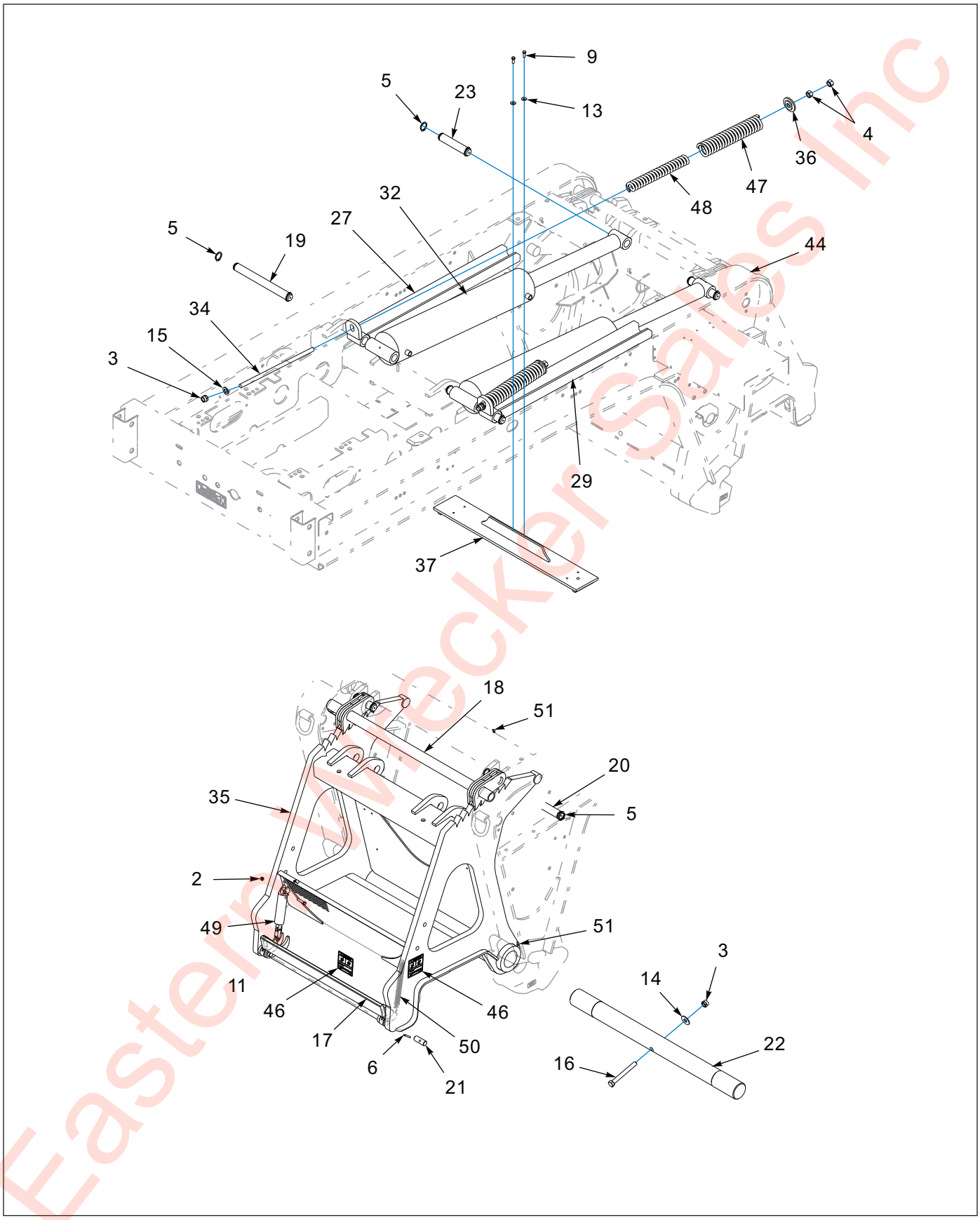

Figure 1-6: General Assembly - 835E (2 of 2)

Eastern Wrecker Sales Inc

General Assembly - 835E

ITEM	PART NO.	DESCRIPTION	QTY.
	197600	GOOSENECK ASSEMBLY 835E - 12FT	
1	1-512-010005-01	NUT,HEX,SLFLKG GRB 1/4-20	9
2	1-512-010005-05	NUT, HEX, SLFLKG GRB 3/8-16	8
3	1-512-010005-15	NUT,HEX,SLFLKG GRB 3/4-10	3
4	1-512-010007-12	NUT, HEX 3/4-10 GR2 ZP	4
5	1-630-010021-01	RING, 1.5 RETAINING HD	12
6	1-647-010004221	PIN,SPRING 1/4X2 SLOTTED	2
7	1-654-010047-04	SCREW,HEX CAP,1/4-20X3/4 GR5	2
8	1-654-010047-05	SCREW, HX CP 1/4-20UNCx7/8 GR5	7
9	1-654-010051-05	SCREW,HEX CAP 3/8-16UNCX1 GR5	7
10	1-654-010051-07	SCREW,HEX CAP,3/8-16UNCX1-1/2	3
11	1-654-010051-08	SCREW,HEX CAP,3/8-16X1-3/4 G	2
12	1-861-010032-07	WASHER,FLAT 1/4 ZP	13
13	1-861-010032-11	WASHER, FLAT 3/8 W ZP/CD	6
14	1-861-010032-21	WASHER, FLAT 3/4 W ZP/CD	1
15	622-3511-008	WASHER, FLAT 3/4 MIL-CARB SAE	2
16	100855	SCREW, HHCS,3/4-10X6-1/2 GR5	1
17	105237	LATCH WLDMT G/N LOWER	1
18	105239	LATCH WLDMT G/N UPPER	1
19	105241	PIN 1-1/2X15 ZP	2
20	105242	PIN 1-1/2X5-1/4 ZP	2
21	105243	PIN,LOWER G/N LATCH 825	2
22	105245	PIN, G/N TO CARRIER 825	1
23	105272	PIN 1-1/2X7-3/4 ZP	2
24	105281	DECAL, 825 CONTROLS	1
25	105282	DECAL 825 DETACH PROCEDURE	1
26	105283	DECAL 825 HOOKUP PROCEDURE	1
27	105285	WLDMT RH, CHANNEL, LIFT G/N	1
28	105822	DECAL, HYD COUPLER	1
29	106943	CHANNEL WLDMT, LIFT G/N	1
30	107887	VALVE AIR PUSH BUTTON	REF
31	125894	CLAMP, CABLE 5/8 SST	2
32	138711	CYL HYD 6X30 O-RING **(SEE PAGE 1-33)**	REF
33	150076	MANUAL TUBE 4-1/4"ID	1
34	153018	SPRING ROD G/N LIFTARM	2
35	155061	CARRIER WLDMT 800	1
36	156430	SPRING CAP WLDMT	2
37	162056	BAR WLDMT LIFT-ARM 855	1
38	220303	PLATE, TOP CONTROL BOX BLACK	1
39	178444	BUSHING NYLON INSERT 9/16ID	1
40	189278	PLUG, PLASTIC PANEL 1/2 & 9/16	3
41	189279	PLUG, PLASTIC PANEL 5/8	1
42	189280	PLUG, PLASTIC PANEL 3/4	2
43	189282	PLUG, PLASTIC PANEL 7/8	2
44	197596	GOOSENECK WLDMT 835E-12'	1
45	220304	PLATE, BASE CONTROL BOX BLACK	1
46	2-573-010335	DECAL, DANGER PINCHING	3
47	2-720-010006	SPRING COULTER OUTER	2
48	2-720-010007	SPRING COULTER INNER	2

Eastern Wholesale Sales Inc

General Assembly - 835E

ITEM	PART NO.	DESCRIPTION	QTY.
49	3-238-010007	CYLINDER AIR 1-3/4 BORE	2
50	3-720-010075	SPRING EXTENSION 7/8X6	1
51	5210	ZERK FITTING 1/4-28X45 SAE	4

Eastern Wrecker Sales Inc

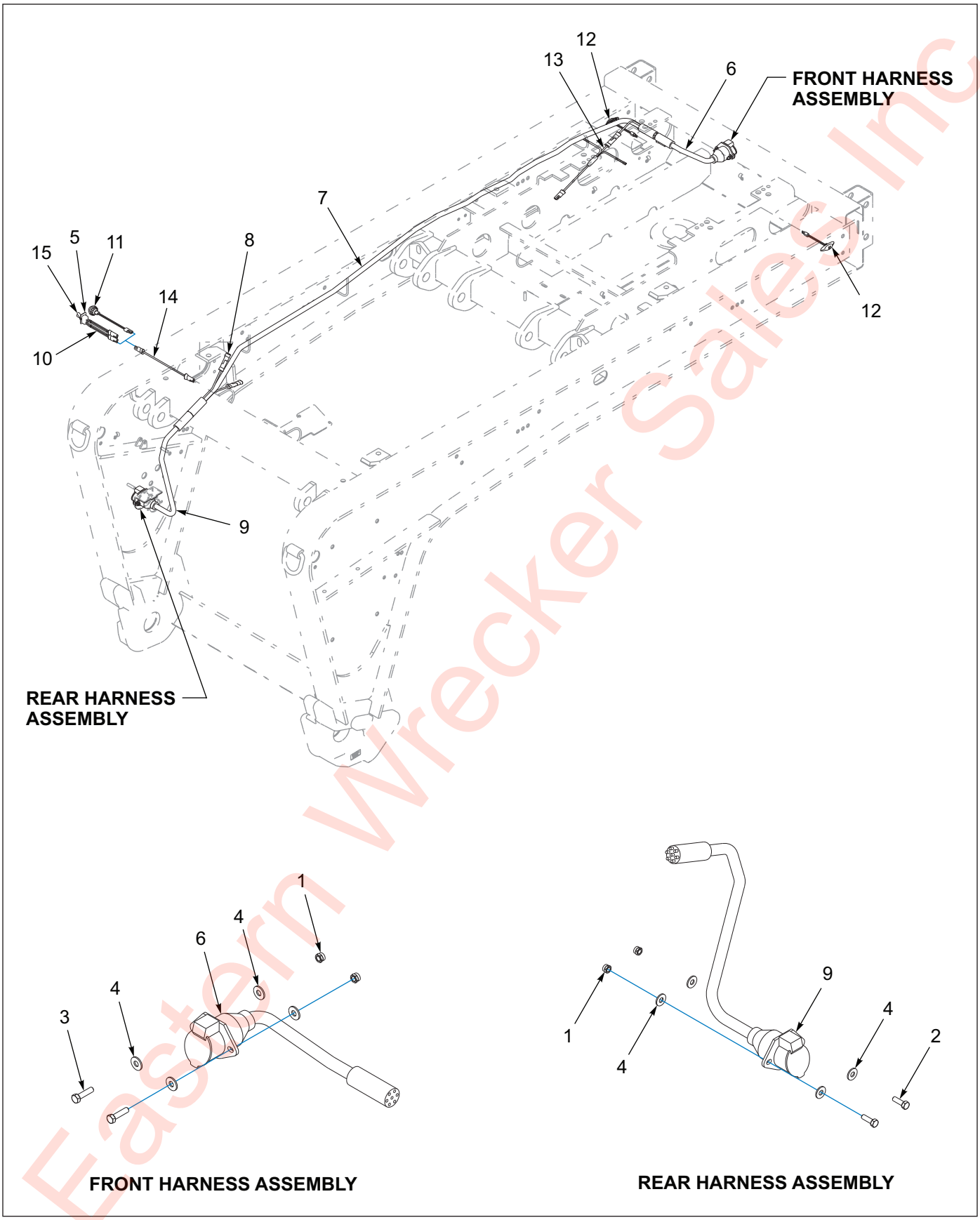

Figure 1-7: Electrical System - 835E

Eastern Wrecker Sales Inc

Electrical System - 835E

ITEM	PART NO.	DESCRIPTION	QTY.
	197600	GOOSENECK ASSEMBLY 835E - 12FT	
1	1-512-010005-03	NUT HEX SLFLKG GRB 5/16-18	4
2	1-654-010049-05	SCREW HX CP 5/16-18UNCX1 GR5	2
3	1-654-010049-06	SCREW,H/CAP,5/16-18UNCX1-1/4	2
4	1-861-010032-09	WASHER, FLAT 5/16 W ZP/CD	8
5	130116	DECAL, ON/OFF LIGHT	1
6	143100	HARNESS 7WAY RECP GROTE	1
7	143101	HARNESS FRONT MAIN GROTE	1
8	143121	DUMMY PLUG MALE/FEM BULLET	REF
9	146897	HARNESS 7WAY RECP REAR GROTE	1
10	150117	SWITCH ASSY LIGHT GROTE	1
11	185059	LIGHT,LED COURTESY, GROTE	1
12	187863	LIGHT YEL LED.75CL/MK CLEAR CB	2
13	200036	HARNESS MARKER LFT SMALL END	1
14	3-368-010252	HARNESS ASSY BKHD LIGHT EXT	1
15	81264	RUBBER BOOT FOR ELECT SWITCH	1

Eastern Wrecker Sales Inc

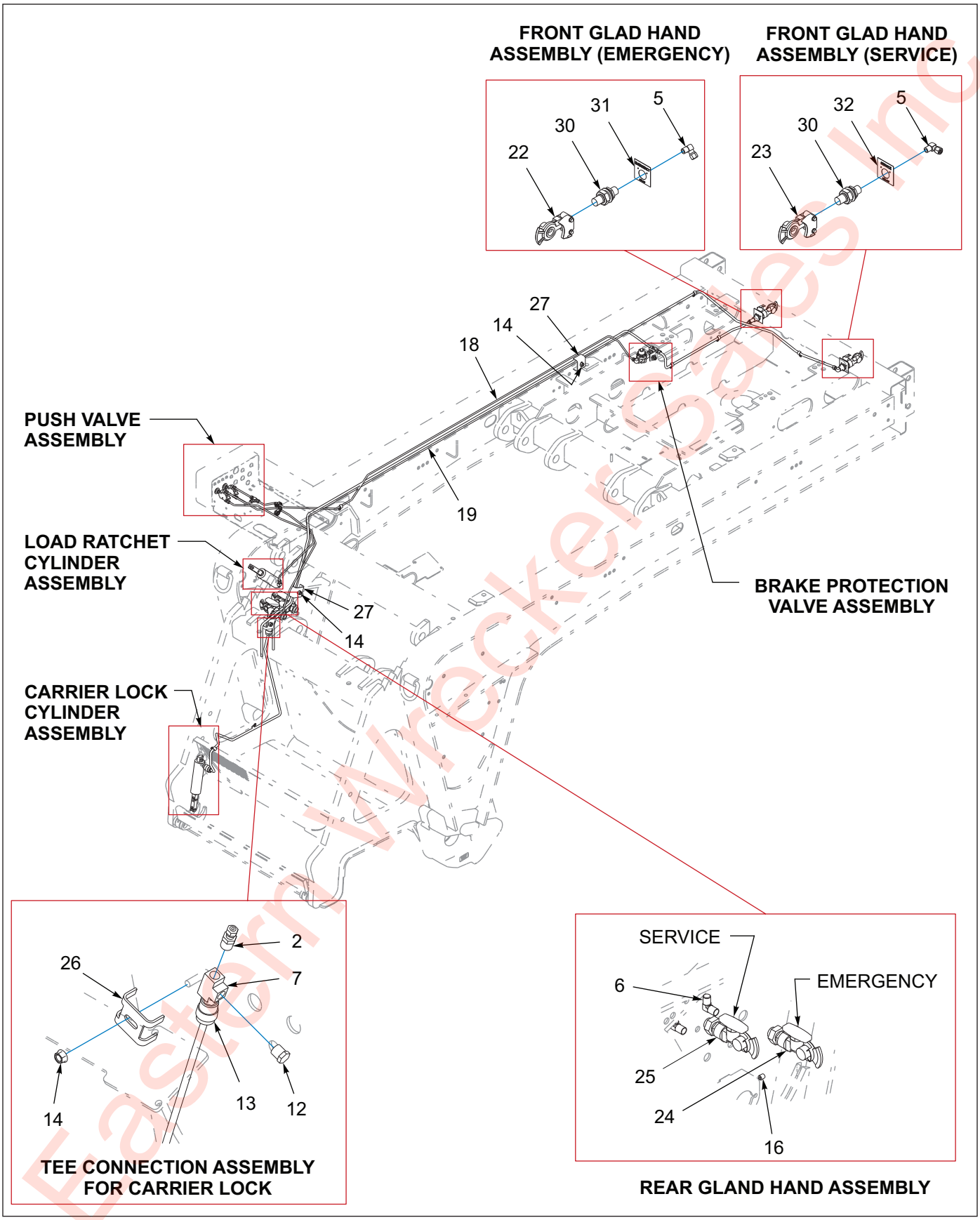

Figure 1-8: Air System - 835E (1 of 2)

Eastern Wrecker Sales Inc

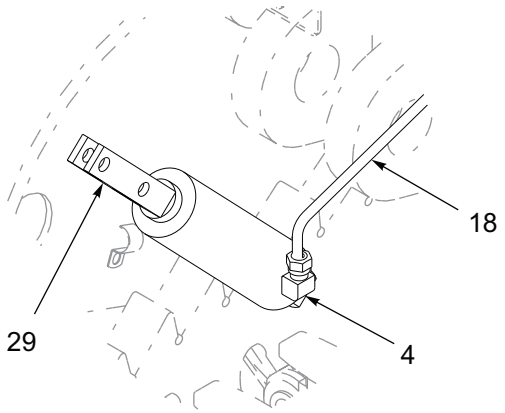

LOAD RATCHET CYLINDER ASSEMBLY

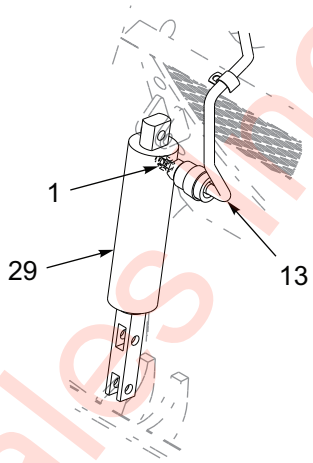

CARRIER LOCK CYLINDER ASSEMBLY

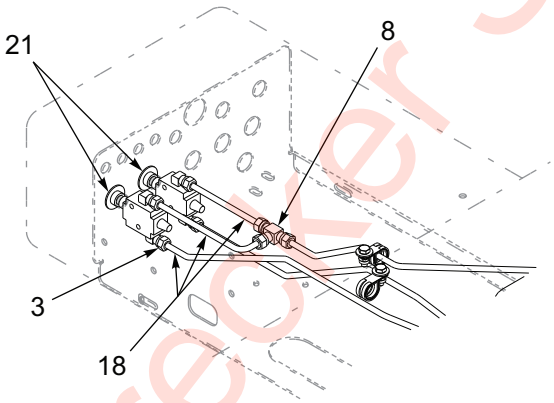

PUSH VALVE ASSEMBLY

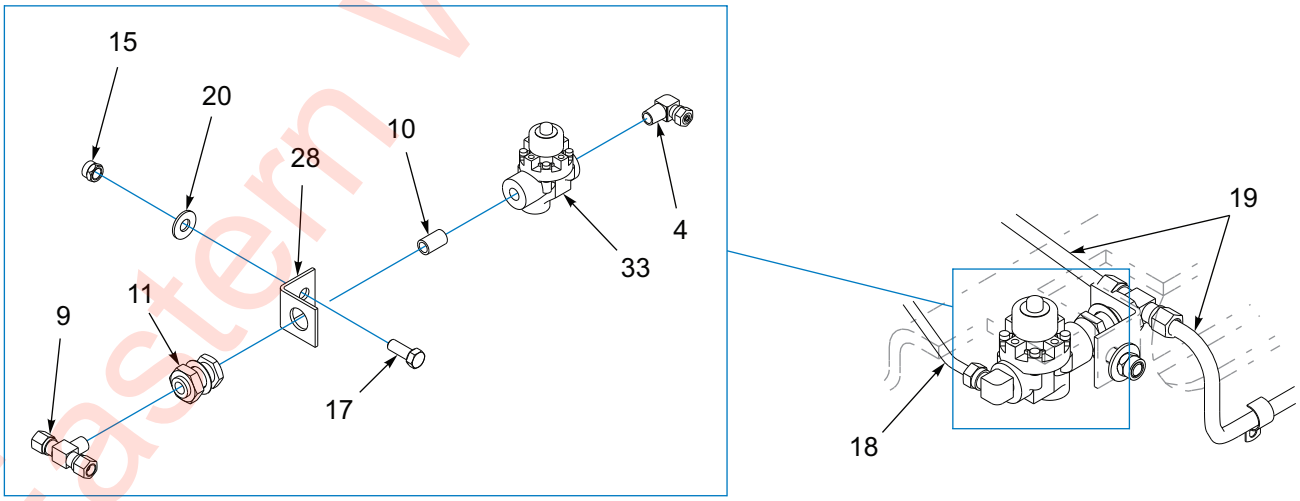

BRAKE PROTECTION VALVE ASSEMBLY

Figure 1-9: Air System - 835E (2 of 2)

Eastern Wrecker Sales Inc

Air System - 835E

ITEM	PART NO.	DESCRIPTION	QTY.
	197600	GOOSENECK ASSEMBLY 835E - 12FT	
1	1-297-010004-04	FITTING,BRS PIPE,ADPTR3/8X1/4	1
2	1-297-010007-06	FITTING,AIR,1/4TUBE TO 3/8NPT	1
3	1-297-010008-05	FITTING,AIR 90 1/4TUBEX1/8NPT	4
4	1-297-010008-07	FITTING AIR 90 1/4TUBEX1/4NPT	2
5	1-297-010008-18	FITTING,AIR 90 3/8TUBEX1/4NPT	2
6	1-297-010008-20	FITTING,AIR 90 3/8TUBEX3/8NPT	2
7	1-297-010009-03	FITTING,AIR,PIPE TEE 3/8	1
8	1-297-010010-01	FITTING,AIR,UNION TEE 1/4	1
9	1-297-010015-06	FITTING,AIR,BR TEE 3/8T-1/4P	1
10	1-297-010020-02	FITTING,BRS PIPE,CL NIP 1/4	1
11	1-297-010022-02	FITTING,AIR ANCHR CPLG,1/4NPT	1
12	1-297-010033-03	FITTING,BRASS PLUG HEX 3/8NPT	1
13	1-384-010038056	HOSE ASM AIR 3/8X56,W/3/8 END	1
14	1-510-010001	NUT, 3/8-16 UNC FLANGE LOCK	3
15	1-512-010005-05	NUT, HEX, SLFLKG GRB 3/8-16	1
16	1-560-010002-02	PLUG, PIPE, 1/4NPT	1
17	1-654-010051-05	SCREW,HEX CAP 3/8-16UNCX1 GR5	1
18	1-833-010001	TUBING NYLON 1/4 OD	11
19	1-833-010002	TUBING NYLON 3/8 OD	30
20	1-861-010032-11	WASHER, FLAT 3/8 W ZP/CD	1
21	107887	VALVE AIR PUSH BUTTON	2
22	108801	GLAD HAND-RED-AIR	1
23	108802	GLAD HAND-BLUE-AIR	1
24	117838	GLAD HAND W/SHUTOFF EMERGENCY	1
25	117839	GLAD HAND W/SHUTOFF SERVICE	1
26	138814	HOSE CLAMP NOTCHED	1
27	2-181-010001	HOSE CLAMP	2
28	3-120-010445	BRACKET,PRESSURE REGULATOR660	1
29	3-238-010007	CYLINDER AIR 1-3/4 BORE	REF
30	55B61	FRAME UNION	1
31	55B61-6	TAG EMER LINE VELVAC 035025	1
32	55B61-7	TAG SERVICE LINE VELVC 035026	1
33	905-54-107	BRAKE PROTECTION VALVE	1

Eastern Wrecker Sales Inc

Table provided for general use.

NOTES:

Eastern Wrecker Sales Inc

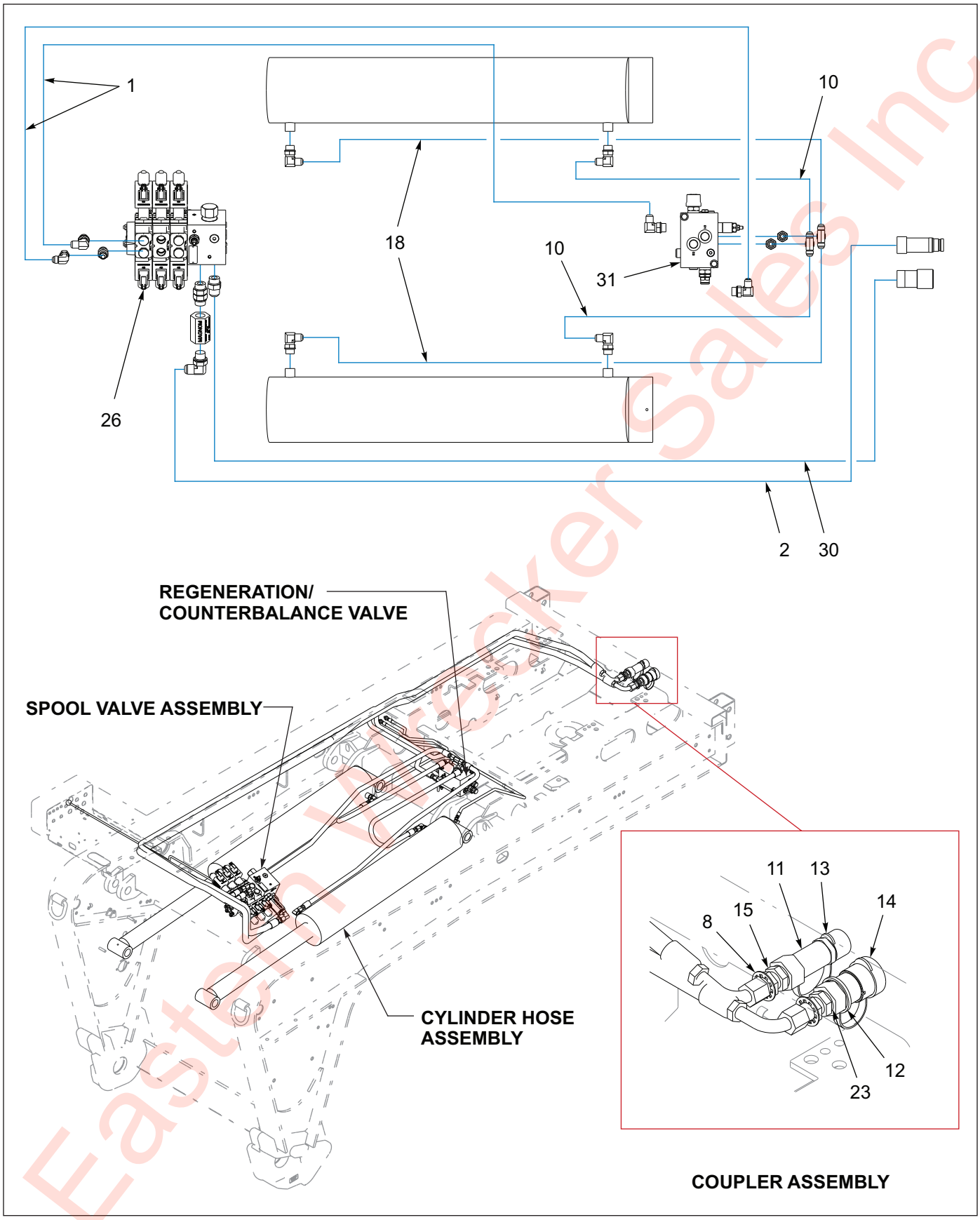

Figure 1-10: Hydraulic & Grease System - 835E (1 of 2)

Eastern Wacker Sales Inc

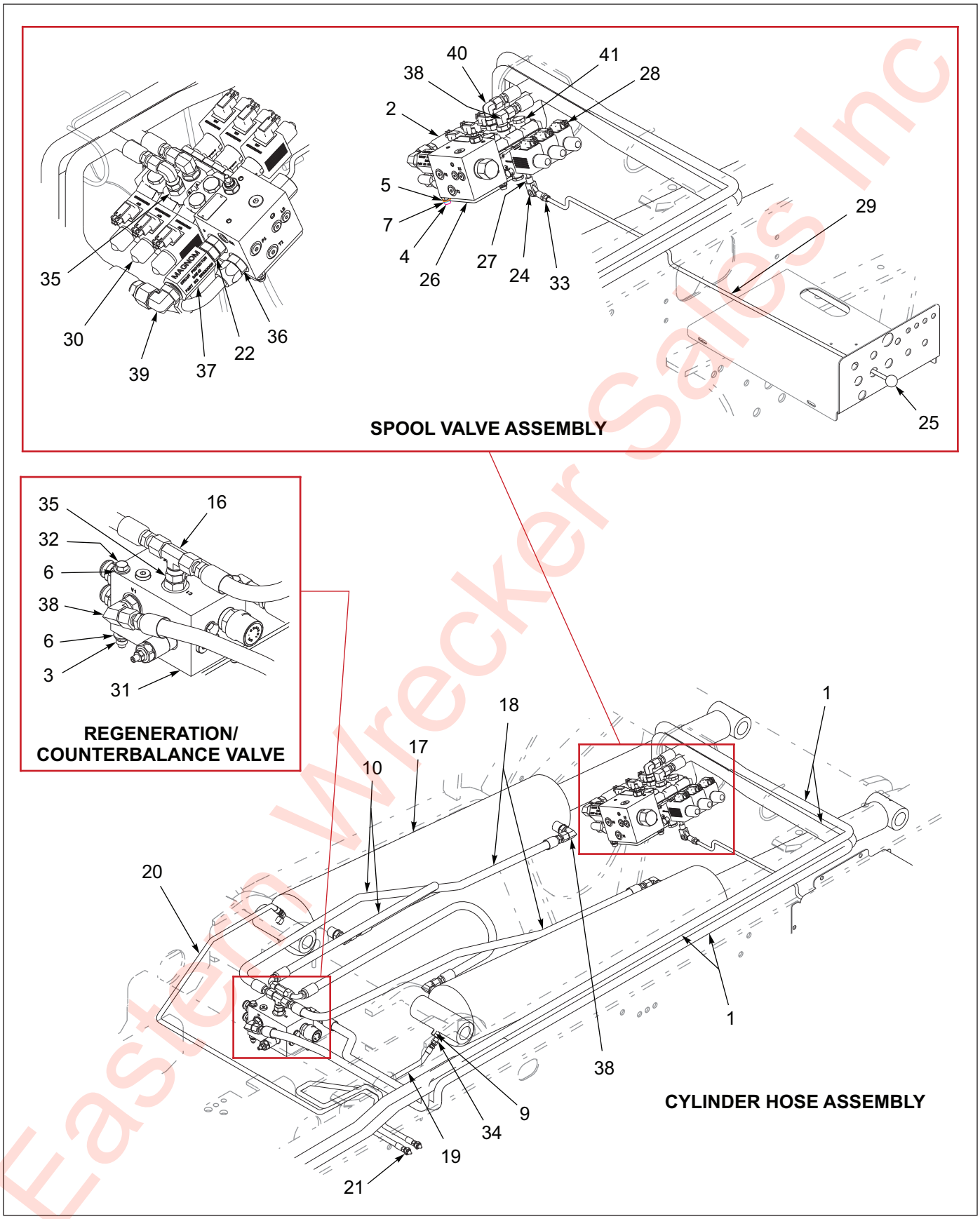

Figure 1-11: Hydraulic & Grease System - 835E (2 of 2)

Eastern Wrecker Sales Inc

Hydraulic & Grease System - 835E

ITEM	PART NO.	DESCRIPTION	QTY.
	197600	GOOSENECK ASSEMBLY 835E - 12FT	
1	1-397-010301114	HOSE ASSY,1/2X114,SAE 37,STR	2
2	1-397-010305164	HOSE ASSY,3/4X164,SAE37,STR90	1
3	1-512-010005-05	NUT, HEX, SLFLKG GRB 3/8-16	2
4	1-654-010049-03	SCREW HX CP 5/16-18UNCX3/4GR5	4
5	1-861-010032-08	WASHER,FLAT 5/16 N ZP	4
6	1-861-010032-10	WASHER, FLAT 3/8" N ZP/CD	4
7	1-861-010034-10	WASHER,LKG 5/16	4
8	1-861-010059-21	WASHER,LKG,INTL TOOTH 1-1/8	2
9	101528	ELBOW,BRASS PIPE STREET	2
10	105275	HOSE ASSY 1/2X45 SAE37 STR90	2
11	105479	COUPLER FLAT FACE MALE NOSE	1
12	105480	COUPLER FLAT FACE FEMALE BODY	1
13	105481	COUPLER DUST CAP MALE	1
14	105482	COUPLER DUST CAP FEMALE	1
15	105483	ADAPTER BLKHD 12JIC-12 ORING	2
16	123109	ADAPTER, TEE, #8JIC FEM BR	2
17	138711	CYL HYD 6X30 O-RING **(SEE PAGE 1-33)**	2
18	1406044	HOSE ASSY 1/2X60SAE37STR-STR	2
19	142441	HOSE ASSY,GREASE 1/4X45	1
20	142465	HOSE ASSY GREASE 1/4X67	1
21	142545	NUT 7/16 FOR BULKHEAD	2
22	158581	ADAPTER STR #12 ORB - #12 ORB	1
23	169365	SPACER HYDR COUPLERS	2
24	186875	CLEVIS JOINT,ROD ENDS M8.1.25	1
25	186877	KNOB,1" ROUND,M8X1.25 THD	REF
26	186885	VALVE, 3 SP, 35 GPM, SOLENOID **(SEE PAGE 1-35)**	1
27	193910	STUD M8-1.25X50MM DBLE THD	1
28	194407	PLUG ASSY DUMMY DEUTSCH 2 PIN	6
29	197610	ROD HANDLE M8X1.25 ENDS LONG	1
30	197612	HOSE ASSY 3/4X164 #12 90-90L	1
31	197615	VALVE REGEN DUAL COUNTERBALANC	1
32	197617	SCREW,HEX CAP,3/8-16UNC, 4-3/4	1
33	1DM8ER	NUT HEX HD M8X1.25 CL8.8	1
34	2024-2-4S	ADAPTER, ELBOW	2
35	202702-10-8S	ADAPTER, #10 O-RING #8 TUBE	3
36	202702-12-12S	ADAPTER,#12 O-RING X #12 TUBE	1
37	204124	FILTER HYD IN-LINE MAGNETIC	1
38	2062-10-8S	ADAPTER,90, #10 O-RING-TUBE	7
39	2062-12-12S	ADAPTER,90,#12 O-RINGX#12TUBE	1
40	2071-8-8S	ADAPTER90 #8 FLR SWIVEL #8JIC	1
41	620-0887	FTG,PLUG #10 MALE O-RING BOSS	4

Eastern Tracker Sales Inc

Table provided for general use.

NOTES:

Eastern Wrecker Sales Inc

Gooseneck Assemblies - 835HD/845HD

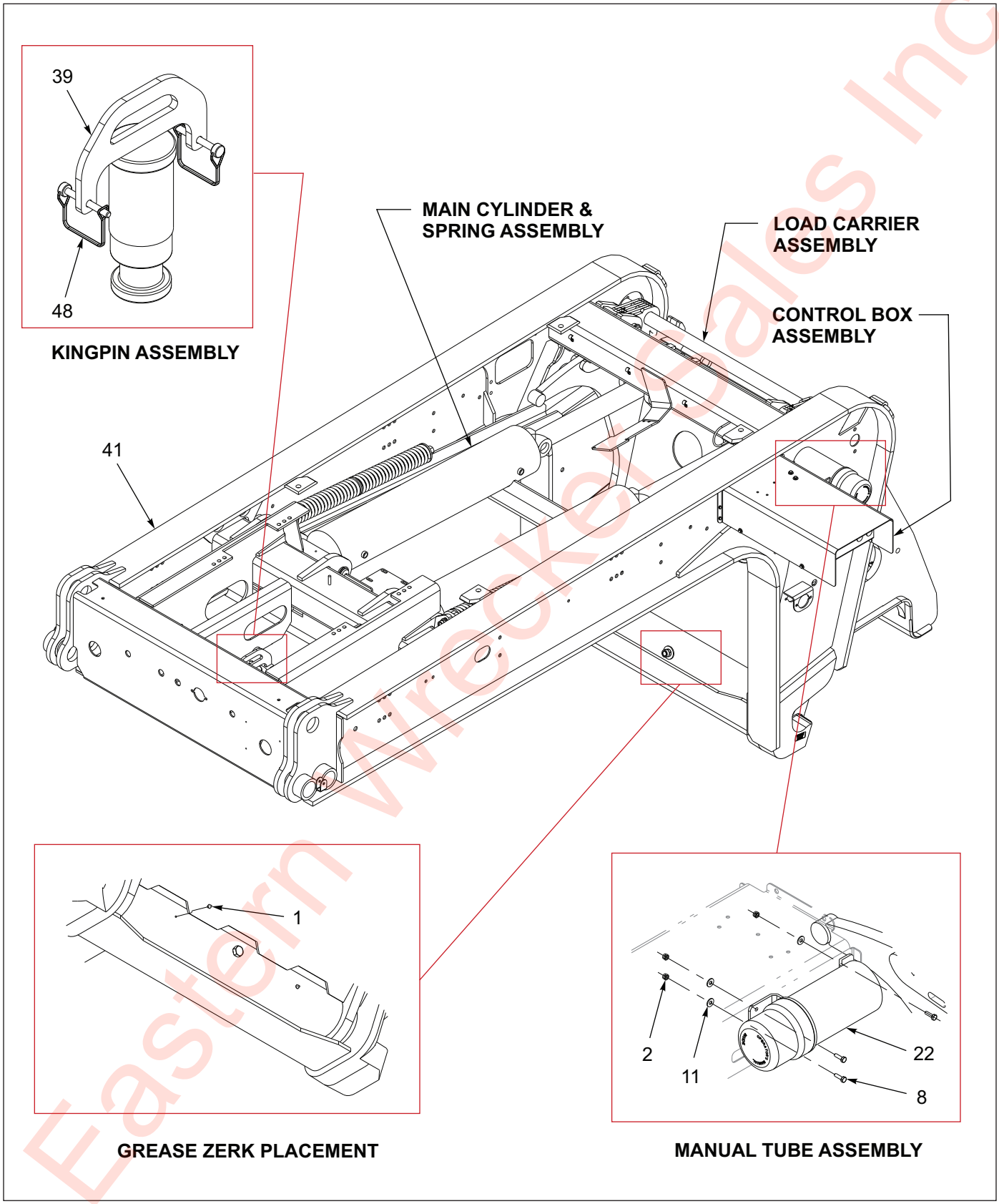

Figure 1-12: General Assembly - 835HD/845HD (1 of 2)

Eastern Wrecker Sales Inc

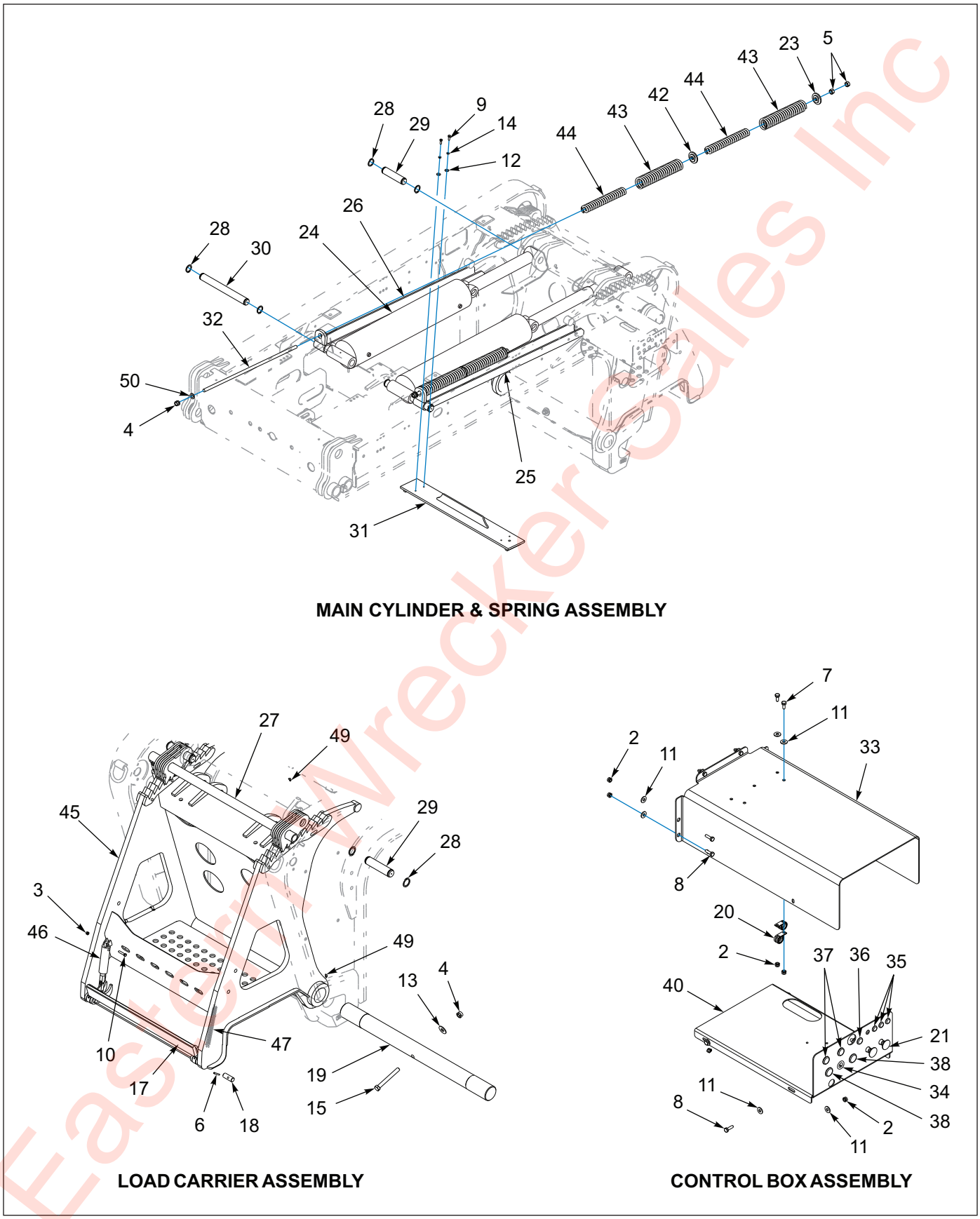

Figure 1-13: General Assembly - 835HD/845HD (2 of 2)

Eastern Wrecker Sales Inc

General Assembly - 835HD/845HD

ITEM	PART NO.	DESCRIPTION	QTY.
	196228	GOOSENECK ASSEMBLY 835HD/845HD - 12FT	REF
1	1-298-010001-1	ZERK FITTING 1/4 SAE	2
2	1-512-010005-01	NUT,HEX,SLFLKG GRB 1/4-20	15
3	1-512-010005-05	NUT, HEX, SLFLKG GRB 3/8-16	2
4	1-512-010005-15	NUT,HEX,SLFLKG GRB 3/4-10	3
5	1-512-010007-12	NUT, HEX 3/4-10 GR2 ZP	4
6	1-647-010004221	PIN,SPRING 1/4X2 SLOTTED	2
7	1-654-010047-03	SCREW, HEX 1/4-20UNCX5/8	2
8	1-654-010047-05	SCREW, HX CP 1/4-20UNCx7/8 GR5	13
9	1-654-010133-05	SCREW,HEX CAP 3/8-16UNCX1 GR5	4
10	1-654-010051-08	SCREW,HEX CAP,3/8-16X1-3/4 G	2
11	1-861-010032-07	WASHER,FLAT 1/4 ZP	19
12	1-512-010005-09	NUT, HEX, SLFLKG, 1/2-13 UNC, GRB	4
13	1-861-010032-21	WASHER, FLAT 3/4 W ZP/CD	1
14	-----	WASHER, LKG HLCL SPR, 3/8 **(BEFORE 10/3/19)**	4
15	100855	SCREW, HHCS,3/4-10X6-1/2 GR5	1
16	101299	KEY CHAIN, LANDOLL (NOT SHOWN)	1
17	105237	LATCH WLDMT G/N LOWER	1
18	105243	PIN,LOWER G/N LATCH 825	2
19	105245	PIN, G/N TO CARRIER 825	1
20	-----	CLAMP, CABLE 5/8 SST	2
21	107887	VALVE AIR PUSH BUTTON	2
22	150076	MANUAL TUBE (4-1/4INID)	1
23	156430	SPRING CAP WLDMT	2
24	160366	CYL HYD 7 X 34 O-RING (SEE PAGE 1-34)	2
25	161165	CHANNEL WLDMT LH,LIFT G/N 855	1
26	161168	CHANNEL WLDMT RH,LIFT G/N 855	1
27	161172	LATCH WLDMT G/N UPPER 855	1
28	162037	RING, 1.75 RETAINING HD	12
29	162038	PIN 1-3/4 X 7-1/2 ZP	4
30	162039	PIN 1-3/4 X 16-1/2 ZP	2
31	162056	BAR WLDMT LIFT-ARM 855	1
32	162788	SPRING ROD 855 G/N LIFTARM	2
33	220303	PLATE, TOP CONTROL BOX	1
34	178444	BUSHING NYLON INSERT 9/16ID	1
35	189278	PLUG, PLASTIC PANEL 1/2 & 9/16	3
36	189279	PLUG, PLASTIC PANEL 5/8	1
37	189280	PLUG, PLASTIC PANEL 3/4	2
38	189282	PLUG, PLASTIC PANEL 7/8	2
39	169372	KINGPIN WLDMT DROP-IN 2"	1
40	220304	PLATE, BASE CONTROL BOX	1
41	197621	GOOSENECK WLDMT 835/845HD-12'	1
42	199942	SPRING CAP WLDMT 2 SIDES	2
43	2-720-010006	SPRING COULTER OUTER	4
44	2-720-010007	SPRING COULTER INNER	4
45	201530	CARRIER WLDMT 845	1
46	3-238-010007	CYLINDER AIR 1-3/4 BORE	2
47	3-720-010075	SPRING EXTENSION 7/8X6	1
48	516-22PTL	RETAINING PIN MUD FLAP	2

Eastern Wrecker Sales Inc

General Assembly - 835HD/845HD

ITEM	PART NO.	DESCRIPTION	QTY.
49	5210	ZERK FITTING 1/4-28X45 SAE	4
50	622-3511-008	WASHER, FLAT 3/4 MIL-CARB SAE	2

Eastern Wrecker Sales Inc

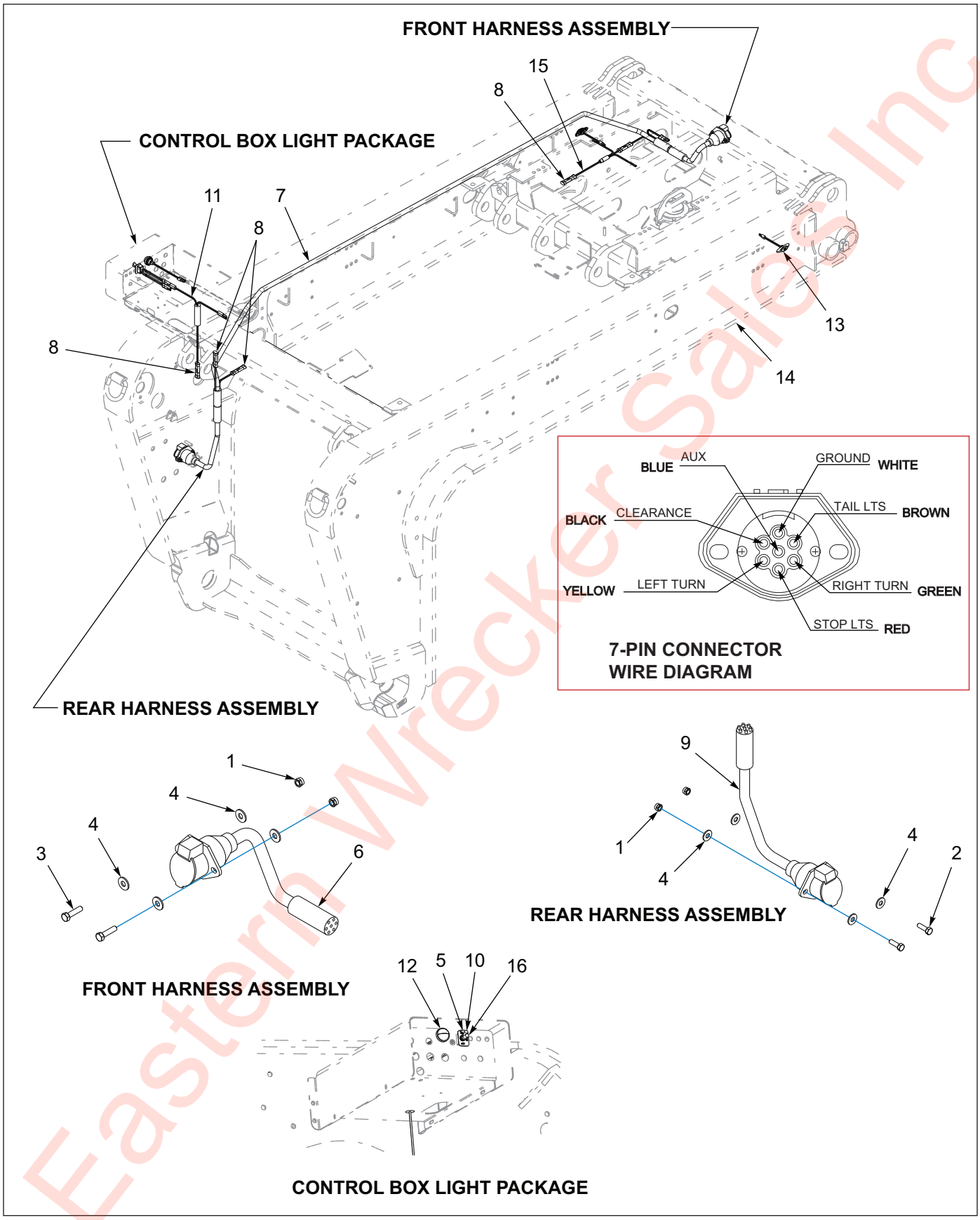

Figure 1-14: Electrical System - 835HD/845HD

Eastern Wrecker Sales Inc

Electrical System - 835HD/845HD

ITEM	PART NO.	DESCRIPTION	QTY.
	196228	GOOSENECK ASSEMBLY 835HD/845HD - 12FT	REF
1	1-512-010005-03	NUT HEX SLFLKG GRB 5/16-18	4
2	1-654-010049-05	SCREW HX CP 5/16-18UNCX1 GR5	2
3	1-654-010049-06	SCREW,H/CAP,5/16-18UNCX1-1/4	2
4	1-861-010032-09	WASHER, FLAT 5/16 W ZP/CD	8
5	130116	DECAL, ON/OFF LIGHT	1
6	143100	HARNESS 7WAY RECP GROTE	1
7	143101	HARNESS FRONT MAIN GROTE	1
8	143121	DUMMY PLUG MALE/FEM BULLET	1
9	146897	HARNESS 7WAY RECP REAR GROTE	1
10	150117	SWITCH ASSY LIGHT GROTE	1
11	169853	HARNESS T PWR BRANCH	1
12	185059	LIGHT,LED COURTESY, GROTE	1
13	187863	LIGHT YEL LED.75CL/MK CLEAR CB	2
14	197621	GOOSENECK WLDMT 835/845HD-12'	REF
15	200036	HARNESS MARKER LFT SMALL END	1
16	81264	RUBBER BOOT FOR ELECT SWITCH	1

Eastern Wrecker Sales Inc

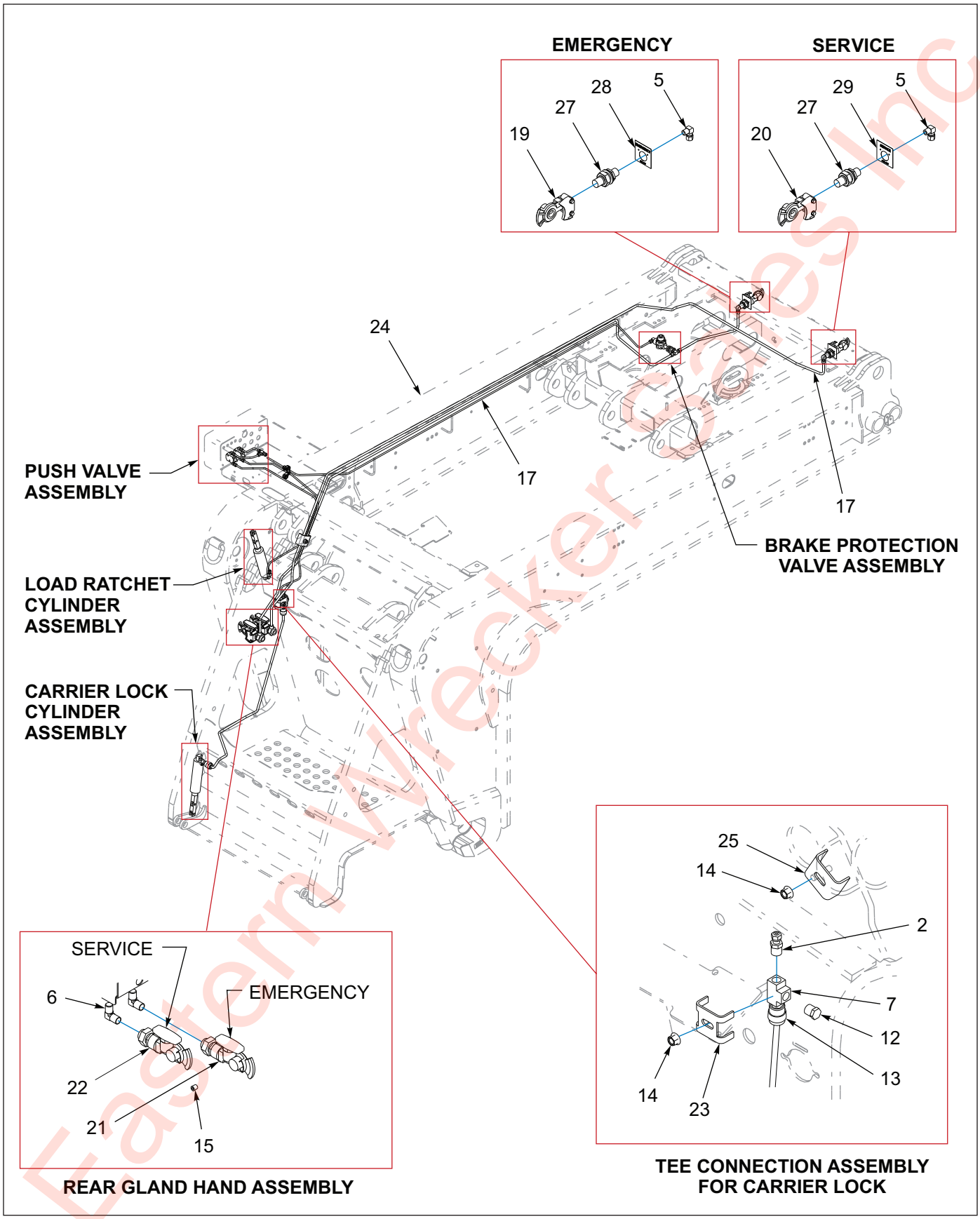

Figure 1-15: Air System - 835HD/845HD (1 of 2)

Eastern Wrecker Sales Inc

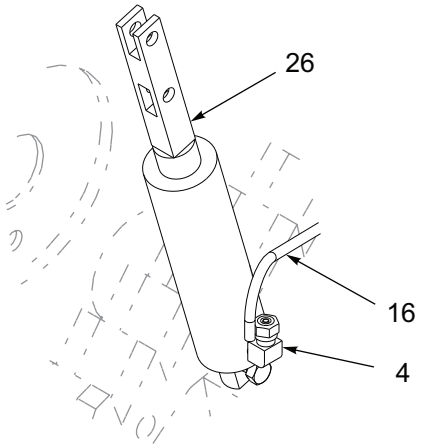

LOAD RATCHET CYLINDER ASSEMBLY

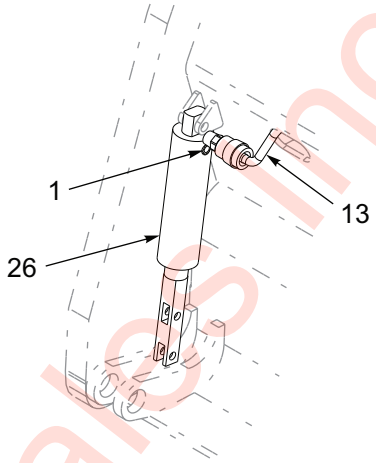

CARRIER LOCK CYLINDER ASSEMBLY

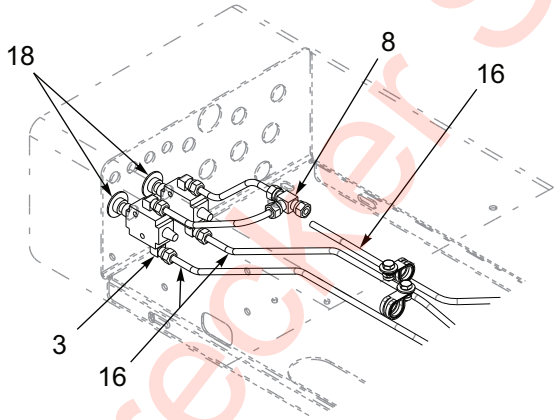

PUSH VALVE ASSEMBLY

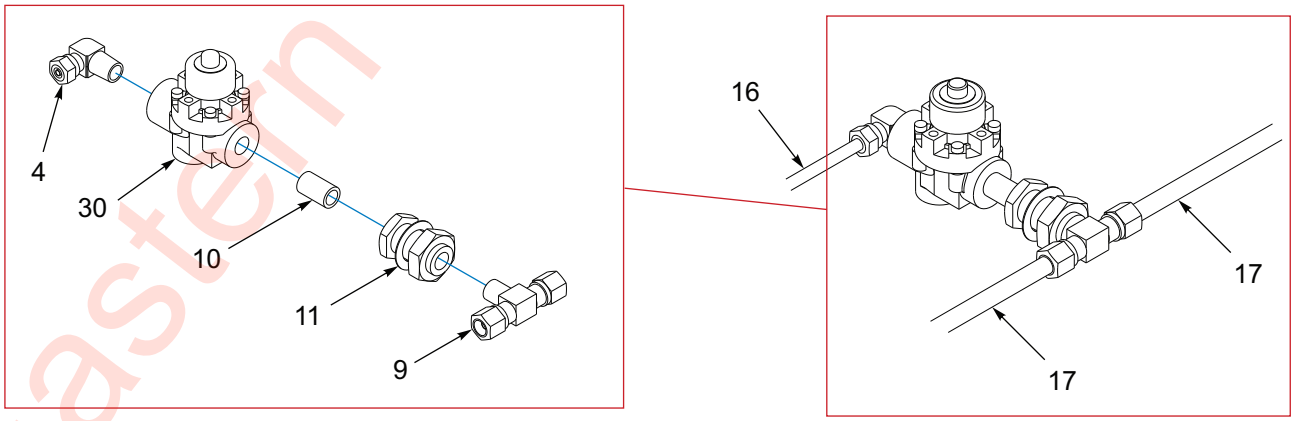

BRAKE PROTECTION VALVE ASSEMBLY

Figure 1-16: Air System - 835HD/845HD (2 of 2)

Eastern Wrecker Sales Inc

Air System - 835HD/845HD

ITEM	PART NO.	DESCRIPTION	QTY.
	196228	GOOSENECK ASSEMBLY 835HD/845HD - 12FT	REF
1	1-297-010004-04	FITTING,BRS PIPE,ADPTR3/8X1/4	1
2	1-297-010007-06	FITTING,AIR,1/4TUBE TO 3/8NPT	1
3	1-297-010008-05	FITTING,AIR 90 1/4TUBEX1/8NPT	4
4	1-297-010008-07	FITTING AIR 90 1/4TUBEX1/4NPT	2
5	1-297-010008-18	FITTING,AIR 90 3/8TUBEX1/4NPT	2
6	1-297-010008-20	FITTING,AIR 90 3/8TUBEX3/8NPT	2
7	1-297-010009-03	FITTING,AIR,PIPE TEE 3/8	1
8	1-297-010010-01	FITTING,AIR,UNION TEE 1/4	1
9	1-297-010015-06	FITTING,AIR,BR TEE 3/8T-1/4P	1
10	1-297-010020-02	FITTING,BRS PIPE,CL NIP 1/4	1
11	1-297-010022-02	FITTING,AIR ANCHR CPLG,1/4NPT	1
12	1-297-010033-03	FITTING,BRASS PLUG HEX 3/8NPT	1
13	1-384-010038056	HOSE ASM AIR 3/8X56,W/3/8 END	1
14	1-510-010001	NUT, 3/8-16 UNC FLANGE LOCK	2
15	1-560-010002-02	PLUG, PIPE, 1/4NPT	1
16	1-833-010001	TUBING NYLON 1/4 OD	11
17	1-833-010002	TUBING NYLON 3/8 OD	30
18	107887	VALVE AIR PUSH BUTTON	2
19	108801	GLAD HAND-RED-AIR	1
20	108802	GLAD HAND-BLUE-AIR	1
21	117838	GLAD HAND W/SHUTOFF EMERGENCY	1
22	117839	GLAD HAND W/SHUTOFF SERVICE	1
23	138814	HOSE CLAMP NOTCHED	1
24	197621	GOOSENECK WLDMT 835/845HD-12	REF
25	2-181-010001	HOSE CLAMP	1
26	3-238-010007	CYLINDER AIR 1-3/4 BORE	2
27	55B61	FRAME UNION	2
28	55B61-6	TAG EMER LINE VELVAC 035025	1
29	55B61-7	TAG SERVICE LINE VELVC 035026	1
30	905-54-107	BRAKE PROTECTION VALVE	1

Eastern Wrecker Sales Inc

Table provided for general use.

NOTES:

Eastern Wrecker Sales Inc

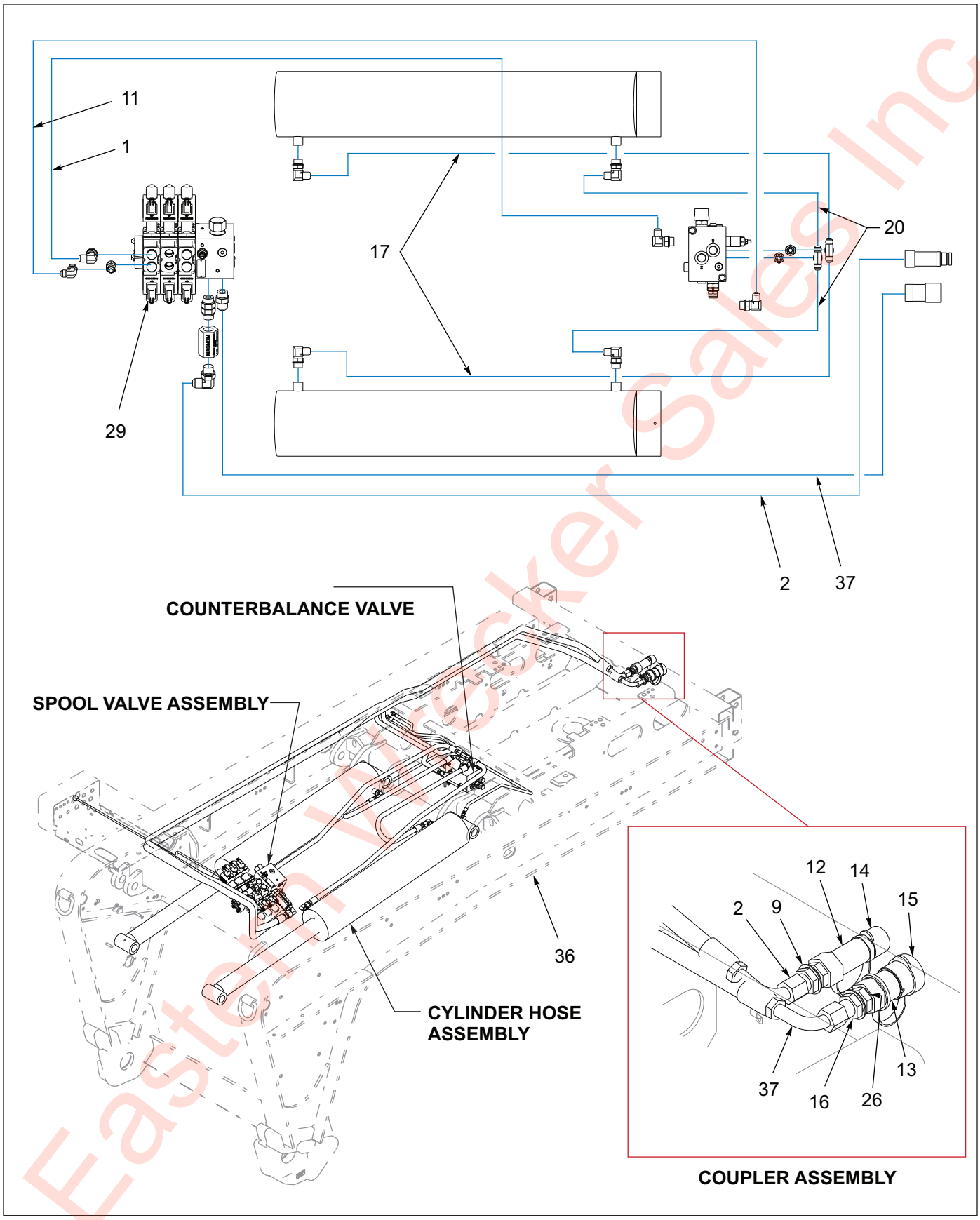

Figure 1-17: Hydraulic & Grease System - 835HD/845HD (1 of 2)

Eastern Wrecker Sales Inc

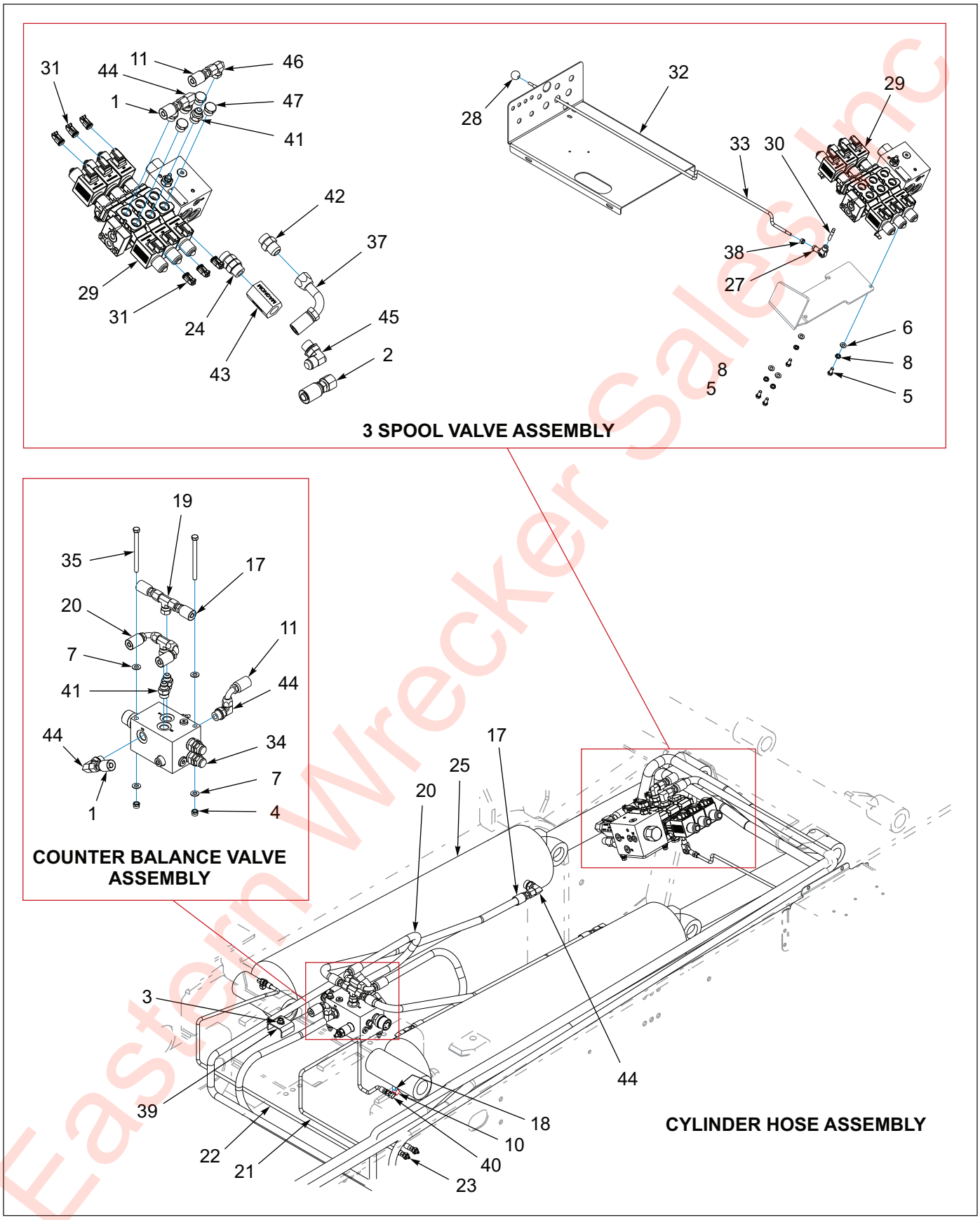

Figure 1-18: Hydraulic & Grease System - 835HD/845HD (2 of 2)

Eastern Wrecker Sales Inc

Hydraulic & Grease System - 835HD/845HD

ITEM	PART NO.	DESCRIPTION	QTY.
	196228	GOOSENECK ASSEMBLY 835HD/845HD - 12FT	REF
1	1-397-010301136	HOSE ASSY,1/2X136 SAE 37 STR	1
2	1-397-010305156	HOSE ASSY 3/4X156 SAE37STR90	1
3	1-510-010001	NUT, 3/8-16 UNC FLANGE LOCK	1
4	1-512-010005-05	NUT, HEX, SLFLKG GRB 3/8-16	2
5	1-654-010049-03	SCREW HX CP 5/16-18UNCX3/4GR5	4
6	1-861-010032-08	WASHER,FLAT 5/16 N ZP	4
7	1-861-010032-10	WASHER, FLAT 3/8" N ZP/CD	4
8	1-861-010034-10	WASHER,LKG 5/16	4
9	1-861-010059-21	WASHER,LKG,INTL TOOTH 1-1/8	2
10	101528	ELBOW,BRASS PIPE STREET	2
11	104370	HOSE ASSY 1/2X126,SAE37,STR90	1
12	105479	COUPLER FLAT FACE MALE NOSE	1
13	105480	COUPLER FLAT FACE FEMALE BODY	1
14	105481	COUPLER DUST CAP MALE	1
15	105482	COUPLER DUST CAP FEMALE	1
16	105483	ADAPTER BLKHD 12JIC-12 ORING	2
17	121002	HOSE ASSY1/2X45,SAE37,STR-STR	2
18	121355	ELBOW ST 45DEG 1/4-28X1/8PTF	2
19	123109	ADAPTER, TEE, #8JIC FEM BR	2
20	125871	HOSE ASSY 1/2X21 SAE37 STR-90	2
21	142441	HOSE ASSY,GREASE 1/4X45	1
22	142465	HOSE ASSY GREASE 1/4X67	1
23	142545	NUT 7/16 FOR BULKHEAD	2
24	158581	ADAPTER STR #12 ORB - #12 ORB	1
25	160366	CYL HYD 7 X 34 O-RING **(SEE PAGE 1-34)**	2
26	169365	SPACER HYDR COUPLERS	2
27	186875	CLEVIS JOINT,ROD ENDS M8.1.25	1
28	186877	KNOB,1" ROUND,M8X1.25 THD	1
29	186885	VALVE, 3 SP, 35 GPM, SOLENOID **(SEE PAGE 1-35)**	1
30	193910	STUD M8-1.25X50MM DBLE THD	1
31	194407	PLUG ASSY DUMMY DEUTSCH 2 PIN	6
32	197605	PLATE, BASE CONTROL BOX	REF
33	197610	ROD HANDLE M8X1.25 ENDS LONG	1
34	197615	VALVE REGEN DUAL COUNTERBALANC	1
35	197617	SCREW,HEX CAP,3/8-16UNC, 4-3/4	1
36	197621	GOOSENECK WLDMT 835/845HD-12'	REF
37	197632	HOSE ASSY 3/4X154 #12 90-90L	1
38	1DM8ER	NUT HEX HD M8X1.25 CL8.8	1
39	2-181-010001	HOSE CLAMP	1
40	2024-2-4S	ADAPTER, ELBOW	2
41	202702-10-8S	ADAPTER, #10 O-RING #8 TUBE	3
42	202702-12-12S	ADAPTER,#12 O-RING X #12 TUBE	1
43	204124	FILTER HYD IN-LINE MAGNETIC	1
44	2062-10-8S	ADAPTER,90, #10 O-RING-TUBE	7
45	2062-12-12S	ADAPTER,90,#12 O-RINGX#12TUBE	1
46	2071-8-8S	ADAPTER90 #8 FLR SWIVEL #8JIC	1
47	620-0887	FTG,PLUG #10 MALE O-RING BOSS	4

Eastern Wholesaler Sales Inc

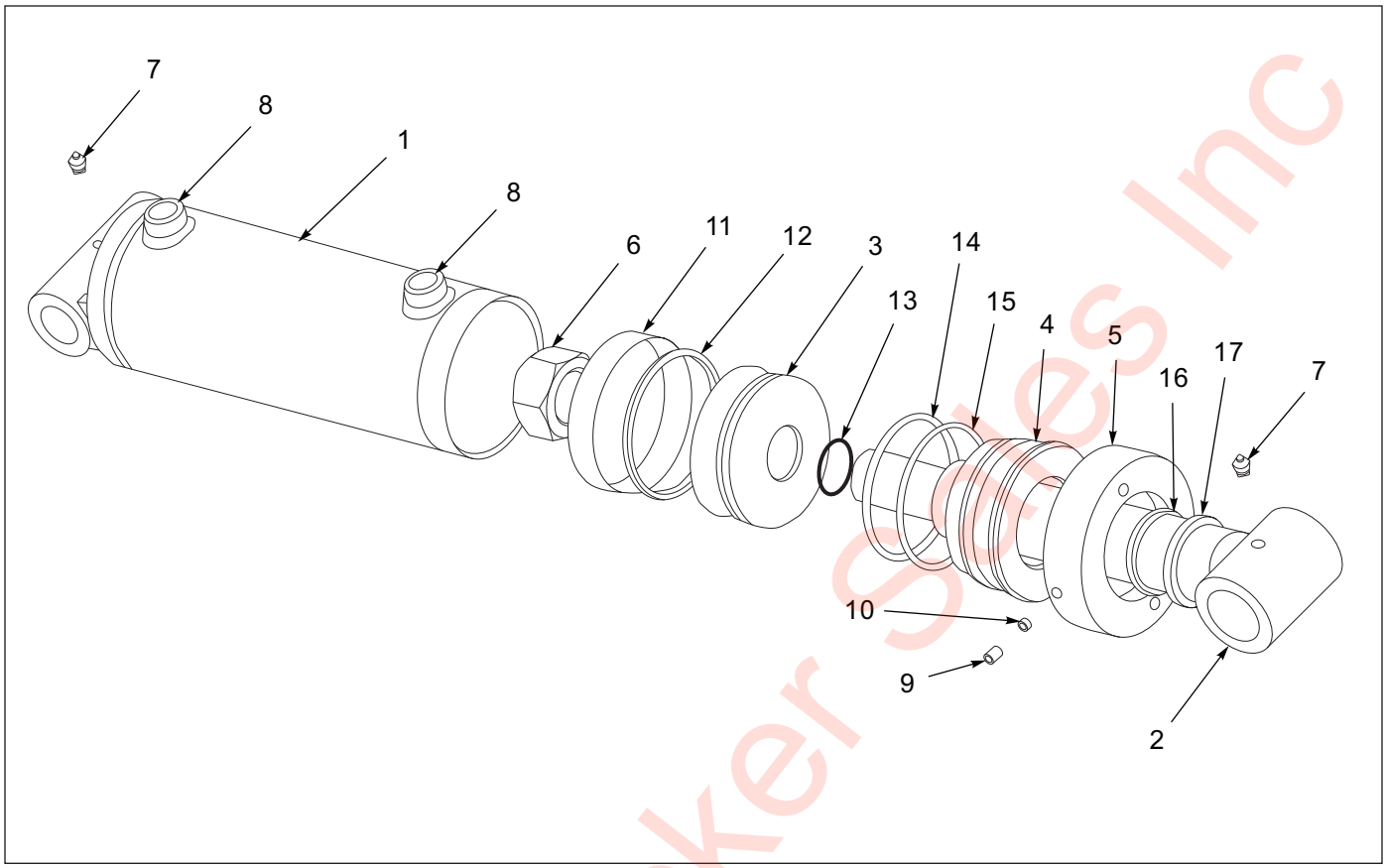

Figure 1-19: Hydraulic Cylinder 6 X 30

Hydraulic Cylinder 6 X 30

ITEM	PART NO.	DESCRIPTION	QTY.
	138711	CYLINDER HYDRAULIC 6 X 30	
1	-----	BUTT AND TUBE ASSEMBLY	1
2	-----	PISTON ROD ASSEMBLY	1
3	148138	PISTON	1
4	148139	GLAND	1
5	-----	GLAND CAP	1
6	-----	LOCKNUT	1
7	-----	GREASE ZERK	2
8	-----	PORT PLUG	2
9	-----	SET SCREW	1
10	-----	NYLON LOCK	1
11	-----	BEARING RING	1
12	-----	CROWN SEAL	1
13	-----	O-RING	1
14	-----	O-RING	1
15	-----	BU-WASHER	1
16	-----	U-CUP	1
17	-----	WIPER	1
18	-----	WIPER	1
19	PMCK-22000	PACKING KIT **(ITEMS 11-18, NOT SHOWN)**	REF

Eastern Wrecker Sales Inc

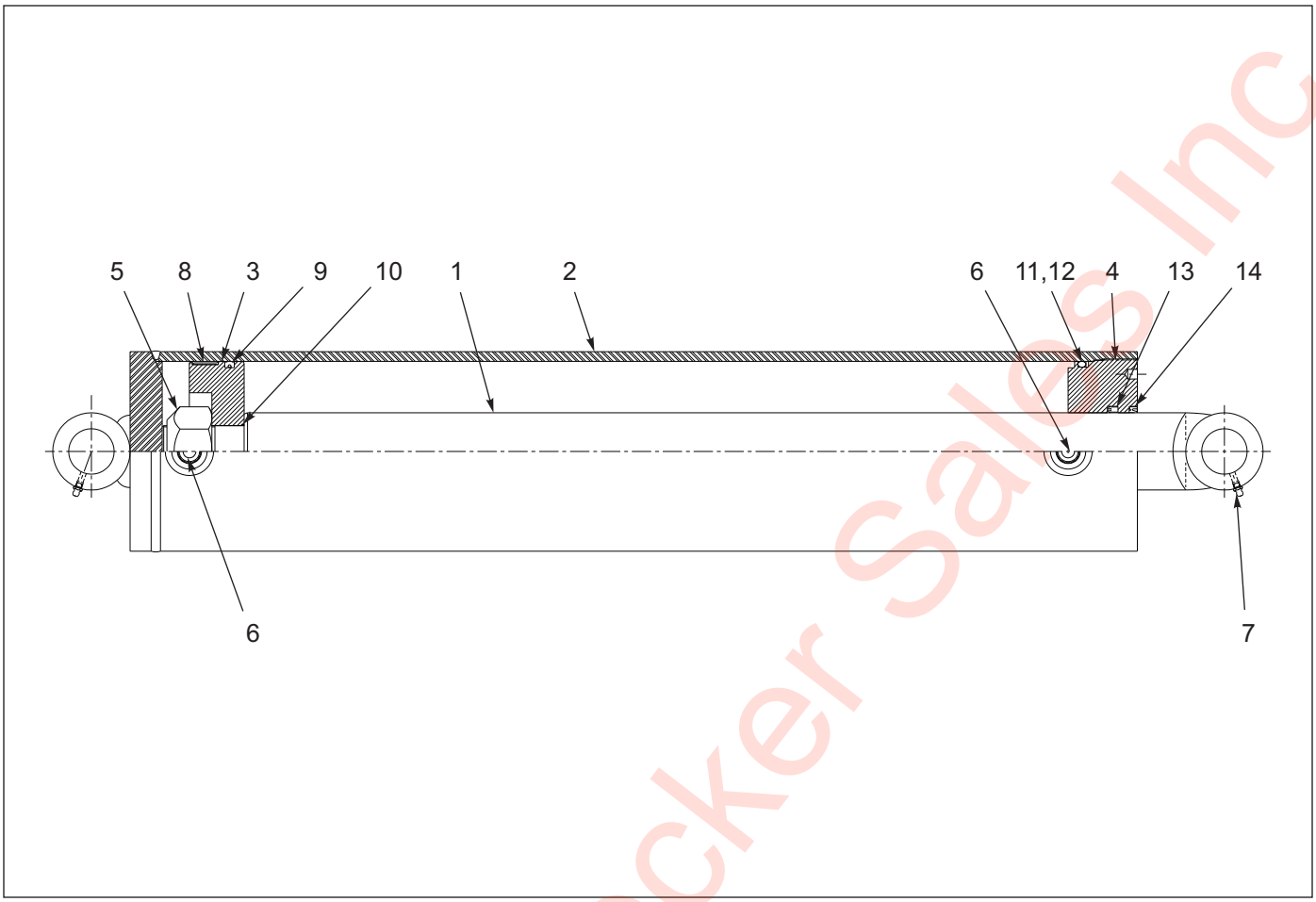

Figure 1-20: Hydraulic Cylinder 7 X 34

Hydraulic Cylinder 7 X 34

ITEM	PART NO.	DESCRIPTION	QTY.
	160366	CYLINDER HYDRAULIC 7 X 34	
1	167199	PISTON ROD ASSEMBLY	1
2	-----	BUTT AND TUBE ASSEMBLY	1
3	-----	PISTON	1
4	167200	GLAND	1
5	-----	LOCKNUT	1
6	-----	PORT PLUG	2
7	-----	GREASE ZERK	2
8	-----	BEARING RING	1
9	-----	CROWN SEAL	1
10	-----	O-RING	1
11	-----	O-RING	1
12	-----	BU-WASHER	1
13	-----	U-CUP	1
14	-----	WIPER	1
15	167201	PACKING KIT (ITEMS 9-14, NOT SHOWN)	REF

Eastern Wrecker Sales Inc

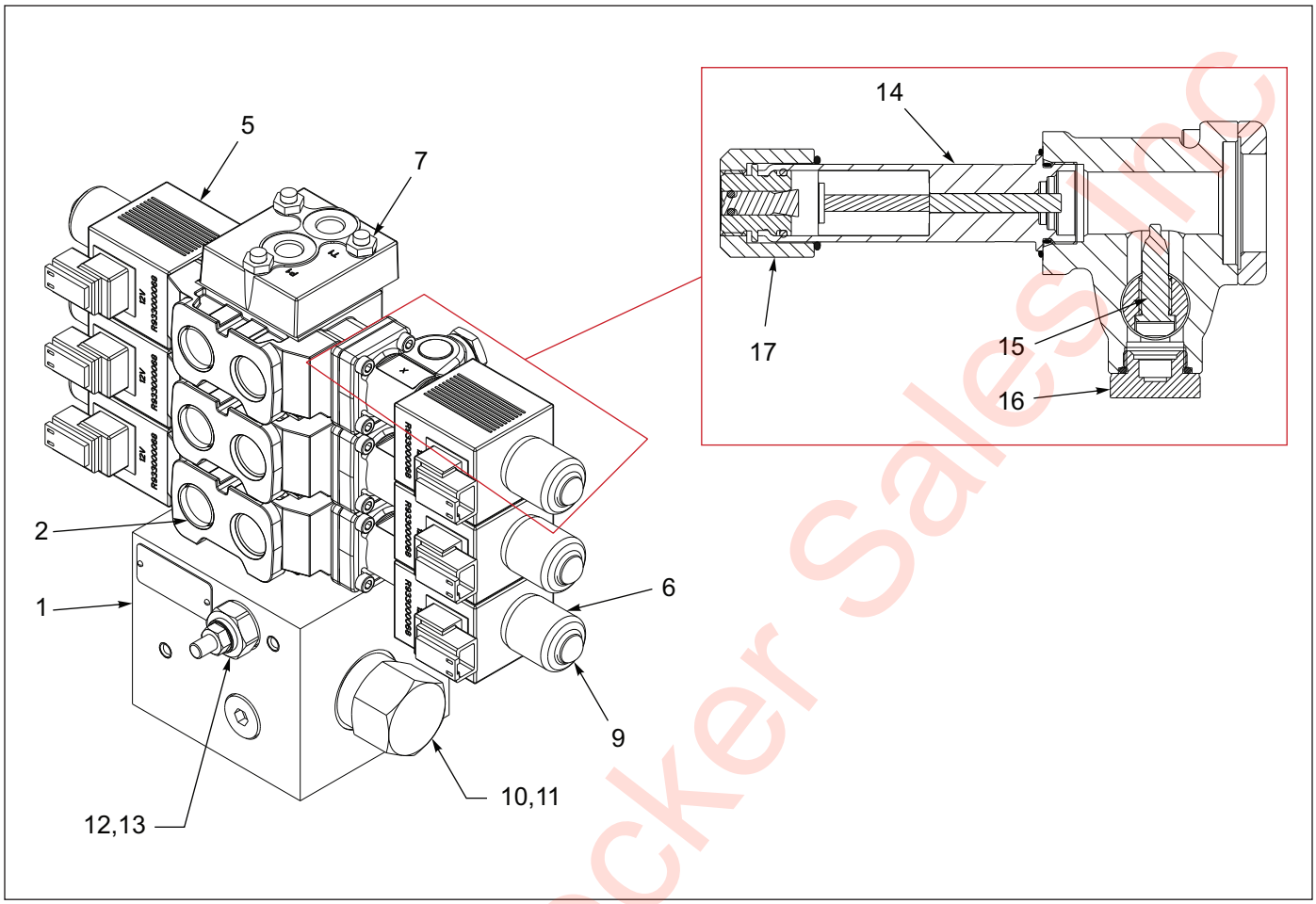

Figure 1-21: Three Spool Valve

Three Spool Valve

ITEM	PART NO.	DESCRIPTION	QTY.
	186885	VALVE, 3 SPOOL, SOLENOID, 35 GPM	
1	191847	INLET SECTION KIT	1
2	191848	VALVE SECTION KIT	3
3	191849	HANDLE ASSY **(NOT SHOWN)**	1
4	191850	HANDLE ASSY **(NOT SHOWN)**	2
5	193400	COIL	1
6	193401	RUBBER BOOT	1
7	193402	BOLT KIT	1
8	193442	VALVE SECTION SEAL KIT **(NOT SHOWN)**	1
9	193443	COIL NUT SEAL KIT	1
10	193444	BY-PASS COMENSATOR	1
11	193445	SEAL KIT FOR COMPENSATOR	1
12	193446	LOAD SENSE RELIEF	1
13	193447	LOAD SENSE RELIEF SEAL KIT	1
14	208390	KIT COMPLETE LEVER BOX, K-22144	1
15	204189	SET SCREW HANDLE ACTUATOR BALL	1
16	208391	PLUG	1
17	208392	COIL NUT LEVER BOX	1

Eastern Wrecker Sales Inc

Front Flip Assemblies - 835HD/845HD

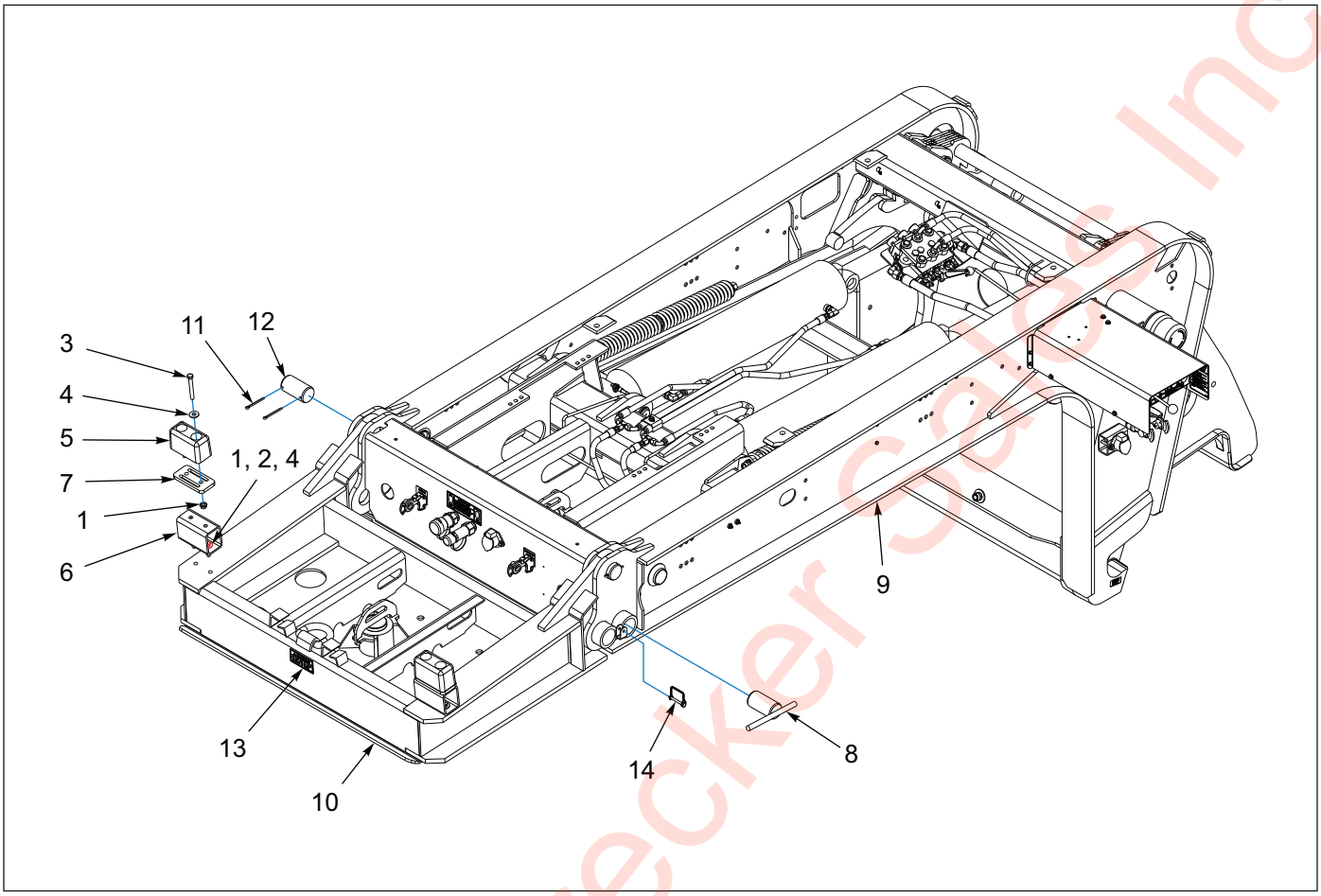

Figure 1-22: Front Flip Assembly - 835HD/845HD

Front Flip Assembly - 835HD/845HD

ITEM	PART NO.	DESCRIPTION	QTY.
	179883	GOOSNECK FLIP EXT 835 HD	
1	1-510-010003-09	NUT,1/2-13 FLANGE HD,SERRATED	8
2	1-654-010055-05	SCREW,HEX CAP,1/2-13UNCX2 GR5	4
3	1-654-010055-13	SCREW,HEX CAP,1/2-13UNCX4 GR5	4
4	1-861-010032-15	WASHER, FLAT 1/2 W ZP/CD	8
5	128874	BUMPER RUBBER 6X3X3-1/2	2
6	148811	MOUNT RUBBER BUMPER	1
7	174681	SPACER, RUBBER BUMP STOP	2
8	179862	PIN WLDMT LWR G/N FLIP EXT	2
9	179866	GOOSENECK ASSY HD 835 12'	REF
10	179885	FLIP WLDMT G/N 36"	1
11	1/4X3	COTTER PIN	4
12	3-557-010273	PIN G/N FLIP	2
13	3-573-010496	DECAL WARNING TIE DOWN	1
14	516-22PTL	RETAINING PIN MUD FLAP	2

Eastern Wrecker Sales Inc

Table provided for general use.

NOTES:

Eastern Wrecker Sales Inc

Frame Assemblies

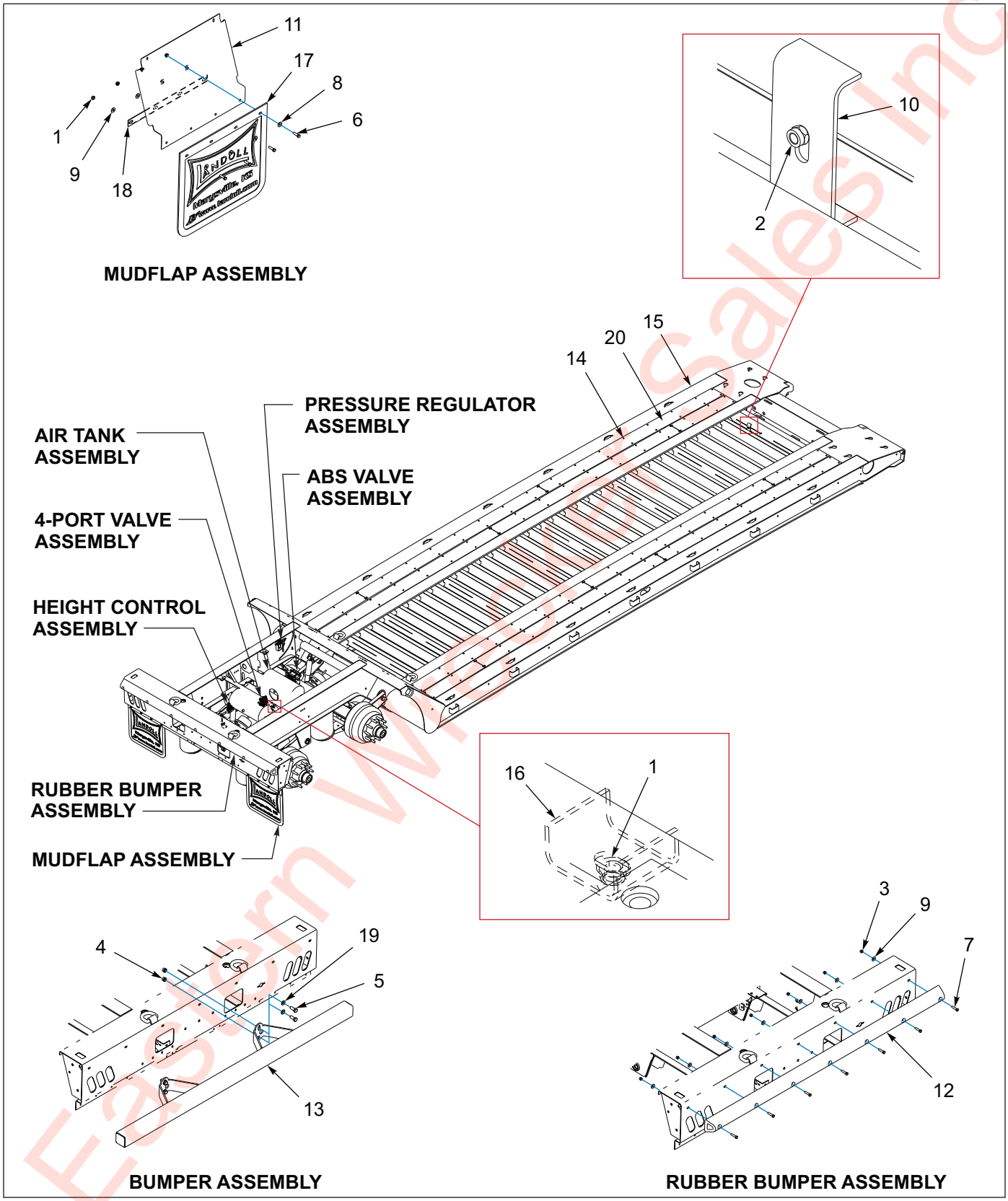

Figure 1-23: General Assembly - 825E

Eastern Wholesale Sales Inc

General Assembly - 825E

ITEM	PART NO.	DESCRIPTION	QTY.	
	199755	FRAME ASSEMBLY 825E-28	*	
	199756	FRAME ASSY 825E-28	*	
	199757	FRAME ASSY 825E-30	*	
	199760	FRAME ASSY 825E-28 I-BEAM	*	
	199761	FRAME ASSY 825E-26	*	
	199762	FRAME ASSY 825E-23 I-BEAM	*	
	199763	FRAME ASSY 825E-23 P/O GALV	*	
	199758	FRAME ASSY 825E-23 P/O		*
	199759	FRAME ASSY 825E-30 PLUS 3		*
1	1-510-010001	NUT, 3/8-16 UNC FLANGE LOCK	9	17
2	1-512-010005-01	NUT,HEX,SLFLKG GRB 1/4-20	1	1
3	1-512-010005-09	NUT,HEX,SLFLKG, 1/2-13 GRB	7	7
4	1-512-010005-15	NUT,HEX,SLFLKG GRB 3/4-10	--	4
5	1-654-010032-4	SCREW 3/4-10X1-3/4 HX CP ZPG8	--	4
6	1-654-010051-06	SCREW,HEX CAP 3/8-16UNCX1-1/4	8	16
7	1-654-010055-05	SCREW,HEX CAP,1/2-13UNCX2 GR5	7	7
8	1-861-010032-11	WASHER, FLAT 3/8 W ZP/CD	8	16
9	1-861-010032-15	WASHER, FLAT 1/2 W ZP/CD	7	7
10	103817	CLAMP,HOSE 660 U/C	1	1
11	105132	SHIELD TAIL LIGHT	2	2
12	106611	BUMPER,REAR TRL 825	1	1
13	124155	BUMPER WLDMT 135 BOBTAIL	--	1
14	158732	SCREW,5/16X2-1/4ZP TORX FLOOR	215	215
15	199724	FRAME WLDMT 825-28 **(USED W/ 199755)**	REF	REF
15	199726	FRAME WLDMT 825-30 **(USED W/ 199756)**	REF	REF
15	199728	FRAME WLDMT 825-28 I-MBR **(USED W/ 199757)**	REF	REF
15	199727	FRAME WLDMT 825-23 **(USED W/ 199761)**	REF	REF
15	199731	GALV OF 199730 FR WLDMT825-23 **(USED W/ 199762)**	REF	REF
15	199730	FRAME WLDMT 825-23 P/O **(USED W/ 199763)**	REF	REF
15	199729	FRAME WLDMT 825-30 PLUS 3 **(USED W/ 199758)**	REF	REF
15	199723	FRAME WLDMT 825-26 **(USED W/ 199759)**	REF	REF
16	2-181-010001	HOSE CLAMP	1	1
17	3-485-010001	FLAP, MUD 21 IN	8	8
18	3-762-010017	CLAMP MUD FLAP	2	2
19	622-3511-008	WASHER, FLAT 3/4 MIL-CARB SAE	--	2
20	RWD34999	APITONG, 1-1/2 X 7-3/4 NET	--	4

Eastern Wrecker Sales Inc

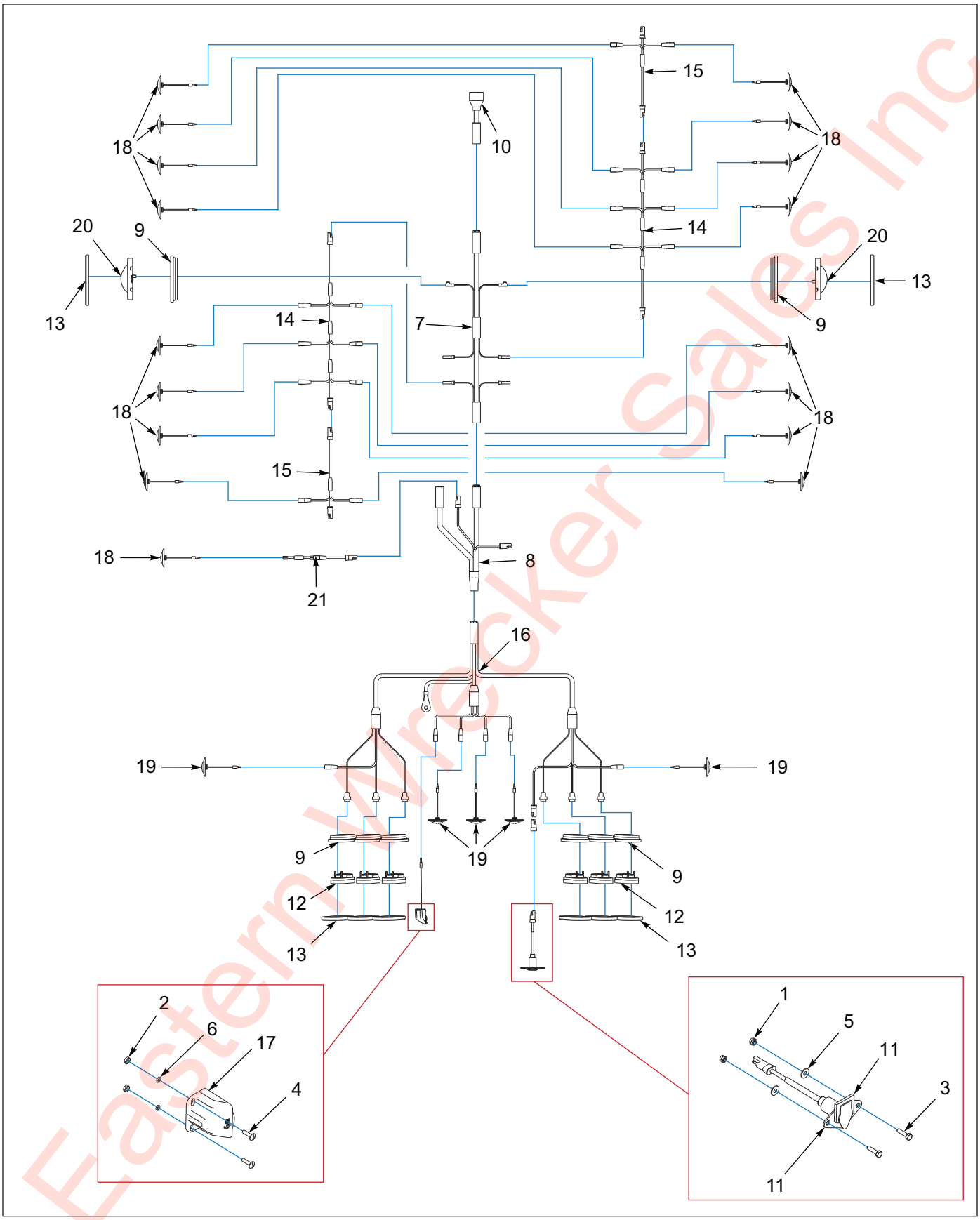

Figure 1-24: Electrical System - 825E

Eastern Wrecker Sales Inc

Electrical System - 825E

ITEM	PART NO.	DESCRIPTION	QTY.				
	199760	FRAME ASSY 825E-26	*				
	199755	FRAME ASSY 825E-28		*			
	199759	FRAME ASSY 825E-28 PLUS 3		*			
	199756	FRAME ASSY 825E-30			*		
	199758	FRAME ASSY 825E-30 PLUS 3			*		
	199757	FRAME ASSY 825E-28 I-BEAM				*	
	199761	FRAME ASSY 825E-23 I-BEAM				*	
	199762	FRAME ASSY 825E-23 P/O GALV					*
	199763	FRAME ASSY 825E-23 P/O					*
1	1-512-010005-01	NUT,HEX,SLFLKG GRB 1/4-20	2	2	2	2	2
2	1-512-010007-03	NUT, HEX 10-24	2	2	2	2	2
3	1-654-010047-06	SCREW,HX CP 1/4-20UNCX1 GR5	2	2	2	2	2
4	1-656-010003051	SCREW,RH HD MACH 10-24X3/4	2	2	2	2	2
5	1-861-010032-07	WASHER,FLAT 1/4 ZP	2	2	2	2	2
6	1-861-010034-07	WASHER,LKG,HLCL SPR, NO 10	2	2	2	2	2
7	143102	HARNESS BED MAIN GROTE	1	1	1	1	1
8	143103	HARNESS ECHAIN GROTE	1	1	1	1	1
9	143114	GROMMET OVAL GROTE **(BEFORE 01/02/20)**	8	8	8	8	8
10	146898	HARNESS 7WAY PLUG G/N GROTE	1	1	1	1	1
11	150116	HARNESS ASSY RCPT 800	1	1	1	1	1
12	179902	LIGHT S/T/T RED CLEAR LENS GRT **(BEFORE 01/02/20)**	6	6	6	6	6
12	213295	LIGHT S/T/T RED CLEAR LENS GRT **(AFTER 01/02/20)**	6	6	6	6	6
13	180570	COVER CHROME OBLONG GROMMET **(BEFORE 01/02/20)**	8	8	8	8	8
13	213296	COVER CHROME OBLONG GROMMET **(AFTER 01/02/20)**	8	8	8	8	8
14	187856	HARNESS MARKER MID DECK	3	3	3	2	2
15	187857	HARNESS MARKER ADDITION	--	1	2	1	2
16	187859	HARNESS BUMPER MICRONOVA GROTE	1	1	1	1	1
17	187860	LIGHT ASSY LICENSE LED GROTE	1	1	1	1	1
18	187863	LIGHT YEL LED.75CL/MK CLEAR CB	19	21	23	15	17
19	187864	LIGHT RED LED.75CL/MK CLEAR CB **(BEFORE 01/02/20)**	5	5	5	5	5
19	213298	LIGHT RED LED.75CL/MK CLEAR CB **(AFTER 01/02/20)**	5	5	5	5	5
20	187868	LIGHT MID-TURN LED CLEAR LENS	2	2	2	2	2
21	200037	HARNESS ABS LIGHT SHORT	1	1	1	1	1
22	43029	HOSE WRAP AEROOUIP 1/4 **(NOT SHOWN)**	3	3	3	3	3

Eastern Wrecker Sales Inc

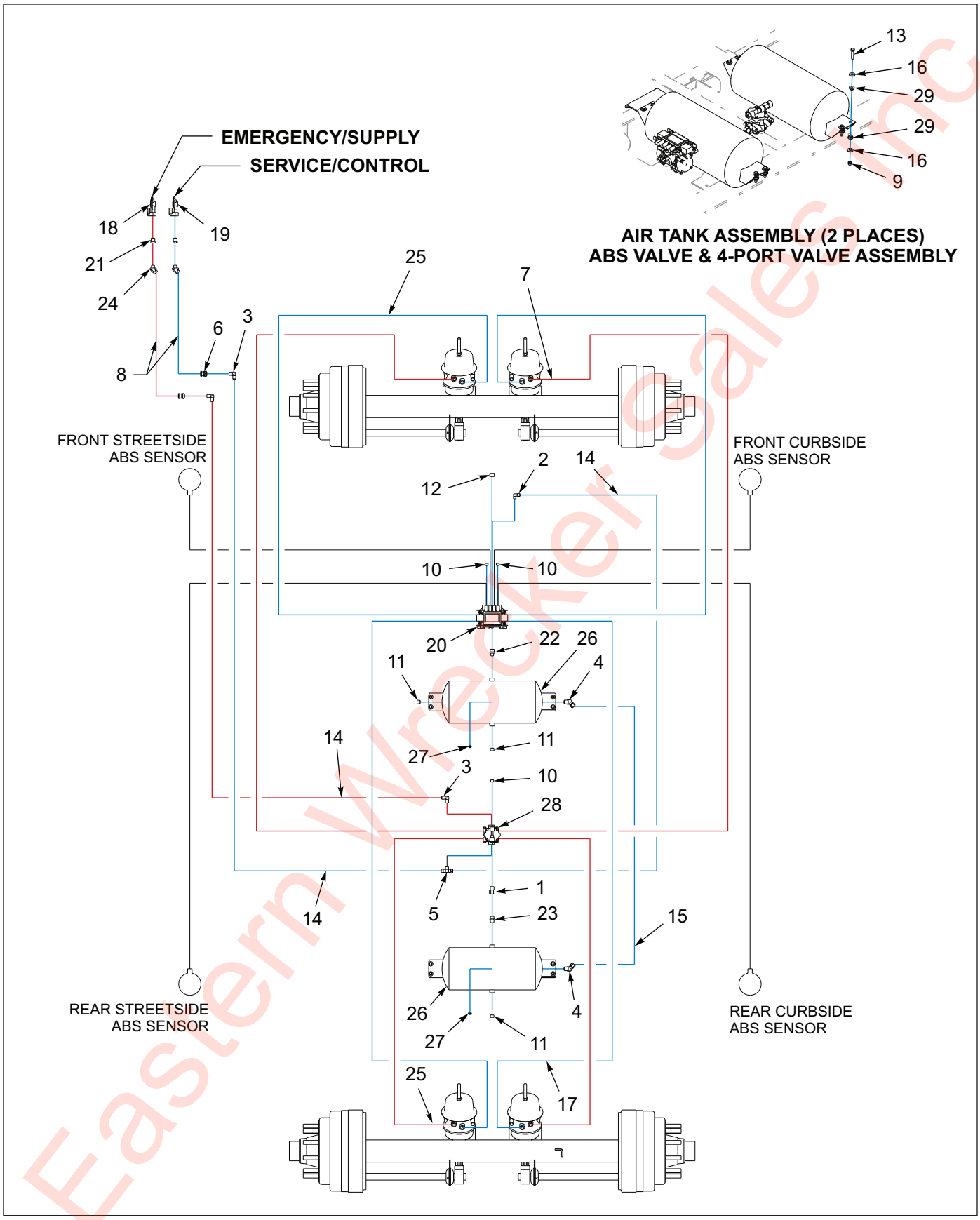

Figure 1-25: Air Brake System - 825E

Eastern Wrecker Sales Inc

Air Brake System - 825E

ITEM	PART NO.	DESCRIPTION	QTY.
	199755	FRAME ASSY 825E-28	
	199756	FRAME ASSY 825E-30	
	199757	FRAME ASSY 825E-28 I-BEAM	
	199758	FRAME ASSY 825E-30 PLUS 3	
	199759	FRAME ASSY 825E-28 PLUS 3	
	199760	FRAME ASSY 825E-26	
	199761	FRAME ASSY 825E-23 I-BEAM	
	199762	FRAME ASSY 825E-23 P/O GALV	
	199763	FRAME ASSY 825E-23 P/O	
1	1-297-010004-07	FITTING,BRS PIPE,ADPTR1/2X1/2	1
2	1-297-010008-18	FITTING,AIR 90 3/8TUBEX1/4NPT	1
3	1-297-010008-20	FITTING,AIR 90 3/8TUBEX3/8NPT	3
4	1-297-010013-16	FITTING,AIR 1/2X1/2 45 M/ELB	2
5	1-297-010015-07	FITTING,AIR,BR TEE 3/8T-3/8P	1
6	1-297-010022-03	FITTING,AIR ANCHR CPLG, 3/8NPT	2
7	1-384-010038060	HOSE ASM AIR 3/8X60,W/3/8 END	2
8	1-384-010038084	HOSE ASM AIR 3/8X84,W/3/8 END	2
9	1-512-010005-05	NUT, HEX, SLFLKG GRB 3/8-16	8
10	1-560-010002-03	PLUG, PIPE, 3/8NPTF	3
11	1-560-010002-04	PLUG, PIPE, 1/2NPT	3
12	1-560-010002-05	PLUG,PIPE, 3/4-14NPTF	1
13	1-654-010051-08	SCREW,HEX CAP,3/8-16X1-3/4 G	8
14	1-833-010002	TUBING NYLON 3/8 OD	84
15	1-833-010003	TUBING NYLON 1/2 OD	10
16	1-861-010032-11	WASHER, FLAT 3/8 W ZP/CD	16
17	101003	HOSE ASM AIR 3/8X48,W/3/8 END	2
18	108801	GLAD HAND-RED-AIR	1
19	108802	GLAD HAND-BLUE-AIR	1
20	114584	ABS KIT WABCO 4S/2M TAB **(SEE PAGE 1-106)**	1
21	2081-8-6S	REDUCER 1/2NPT X 3/8NPT	2
22	2083-12-8S	NIPPLE 3/4NPTX1/2NPT	1
23	2083-8-8S	NIPPLE 1/2NPTX1/2NPT	1
24	2088-6-6S	ADAPTER 45 3/8MPTX3/8FPT	2
25	3-384-010020	HOSE AIR 3/8X32 .38NPT ENDS	4
26	3-780-010002	TANK AIR 9.5X22.5 .5NPT PORTS	2
27	56D4	COCK,DRAIN AIR TANK VEL036019	2
28	758-181	VALVE TASK 4 PORT	1
29	805-2	BUSHINGS, STEP	16

Eastern Wrecker Sales Inc

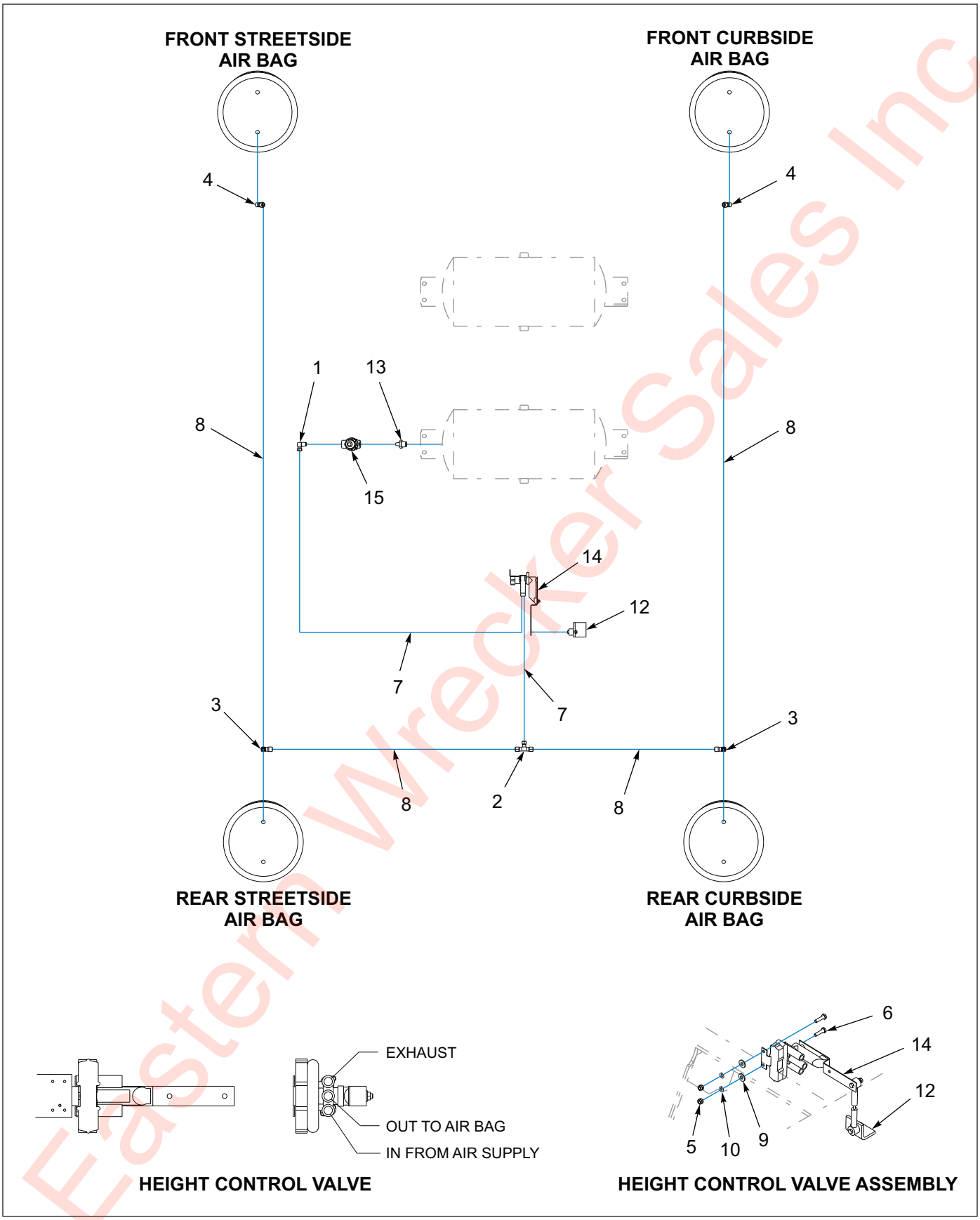

Figure 1-26: Air Ride Suspension - 825E

Eastern Wrecker Sales Inc

Air Ride Suspension - 825E

ITEM	PART NO.	DESCRIPTION	QTY.
	199755	FRAME ASSY 825E-28	
	199756	FRAME ASSY 825E-30	
	199757	FRAME ASSY 825E-28 I-BEAM	
	199758	FRAME ASSY 825E-30 PLUS 3	
	199759	FRAME ASSY 825E-28 PLUS 3	
	199760	FRAME ASSY 825E-26	
	199761	FRAME ASSY 825E-23 I-BEAM	
	199762	FRAME ASSY 825E-23 P/O GALV	
	199763	FRAME ASSY 825E-23 P/O	
1	1-297-010008-07	FITTING AIR 90 1/4TUBEX1/4NPT	1
2	1-297-010010-04	FITTING,AIR,UN/TEE3/8X3/8X1/4	1
3	1-297-010011-04	FITTING,AIR,M/RUN TEE 3/8-1/4	2
4	1-297-010013-11	FITTING,AIR,45 M/ELB3/8T-1/4P	2
5	1-512-010005-01	NUT,HEX,SLFLKG GRB 1/4-20	2
6	1-654-010047-06	SCREW,HX CP 1/4-20UNCX1 GR5	2
7	1-833-010001	TUBING NYLON 1/4 OD	10
8	1-833-010002	TUBING NYLON 3/8 OD	12
9	1-861-010032-07	WASHER,FLAT 1/4 ZP	2
10	1-861-010034-09	WASHER, LKG HLCL SPR, 1/4	2
11	102732	AIR CONTROL KIT **(ITEMS 12, 14, & 15) (SEE PAGE 1-107)**	1
12	111021	KIT SRK-167 NEWAY 952-50-001	REF
13	2083-8-4S	NIPPLE HEX 1/2PIPE - 1/4PIPE	1
14	900 54 007	HEIGHT CONTROL VALVE N	REF
15	905-54-107	BRAKE PROTECTION VALVE	REF

Eastern Wrecker Sales Inc

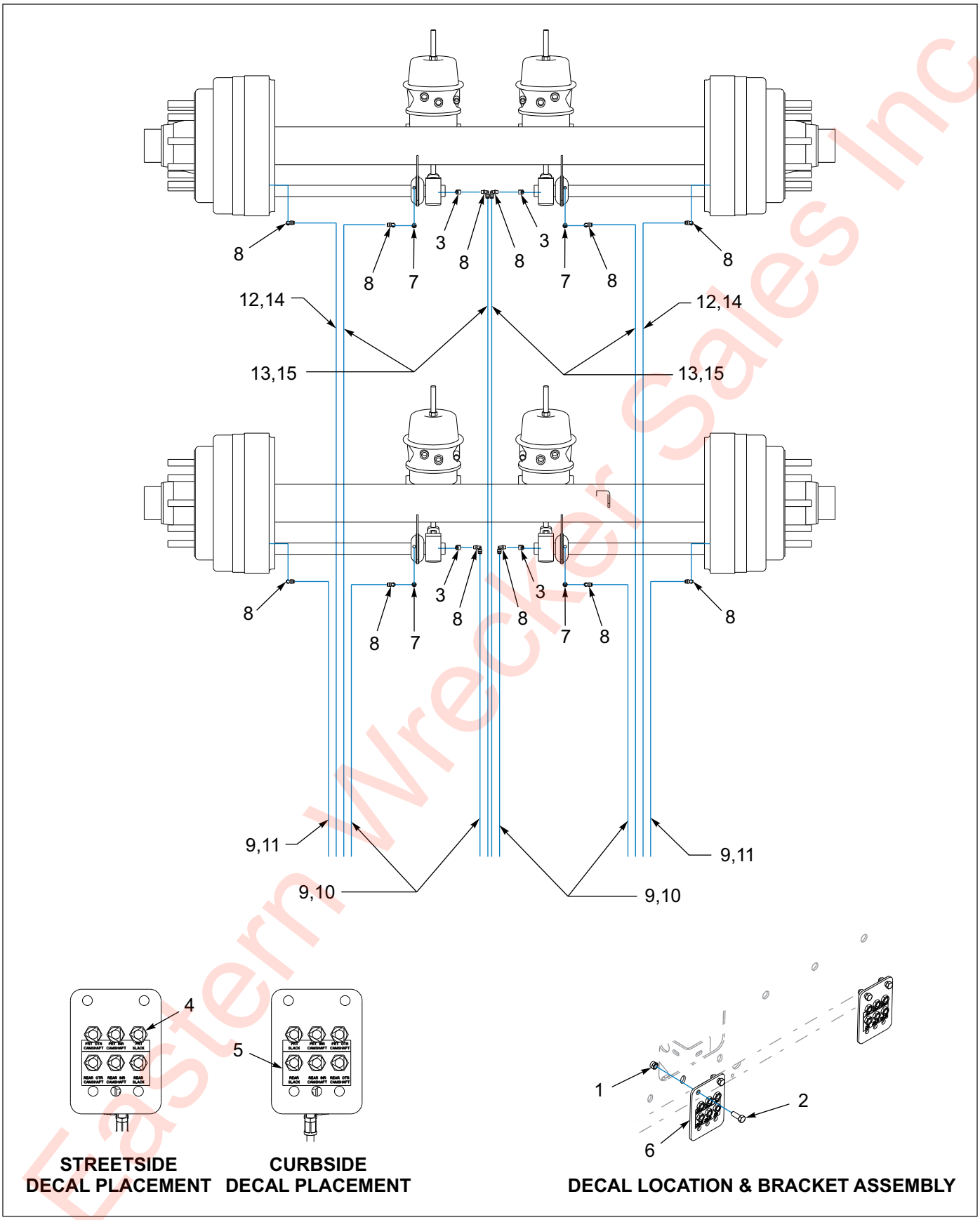

Figure 1-27: Grease Assembly - 825E

Eastern Wrecker Sales Inc

Grease Assembly - 825E

ITEM	PART NO.	DESCRIPTION	QTY.	
	199755	FRAME ASSY 825E-28	*	
	199756	FRAME ASSY 825E-30	*	
	199757	FRAME ASSY 825E-28 I-BEAM	*	
	199760	FRAME ASSY 825E-26	*	
	199761	FRAME ASSY 825E-23 I-BEAM	*	
	199762	FRAME ASSY 825E-23 P/O GALV	*	
	199763	FRAME ASSY 825E-23 P/O	*	
	199758	FRAME ASSY 825E-30 PLUS 3		*
	199759	FRAME ASSY 825E-28 PLUS 3		*
1	1-512-010005-05	NUT, HEX, SLFLKG GRB 3/8-16	4	4
2	1-654-010051-05	SCREW,HEX CAP 3/8-16UNCX1 GR5	4	4
3	101528	ELBOW,BRASS PIPE STREET	4	4
4	142545	NUT 7/16 FOR BULKHEAD	12	12
5	142553	DECAL, GREASE TRL U/C	2	2
6	146922	BRACKET BULKHEAD GREASE LINE	2	2
7	202094	ADAPTER 5/16--18X1/8NPT(F)	4	4
8	202099	FITTING GREASE 90 SWIV PTC 1/8	12	12
9	202102	HOSE ASSY GREASE 1/8 X 36	6	--
10	202108	HOSE ASSY GREASE 1/8 X 88	--	4
11	202109	HOSE ASSY GREASE 1/8 X 94	--	2
12	202111	HOSE ASSY GREASE 1/8 X 102	2	--
13	202112	HOSE ASSY GREASE 1/8 X 118	4	--
14	202115	HOSE ASSY GREASE 1/8 X 138	--	2
15	202118	HOSE ASSY GREASE 1/8 X 156	--	4

Eastern Wrecker Sales Inc

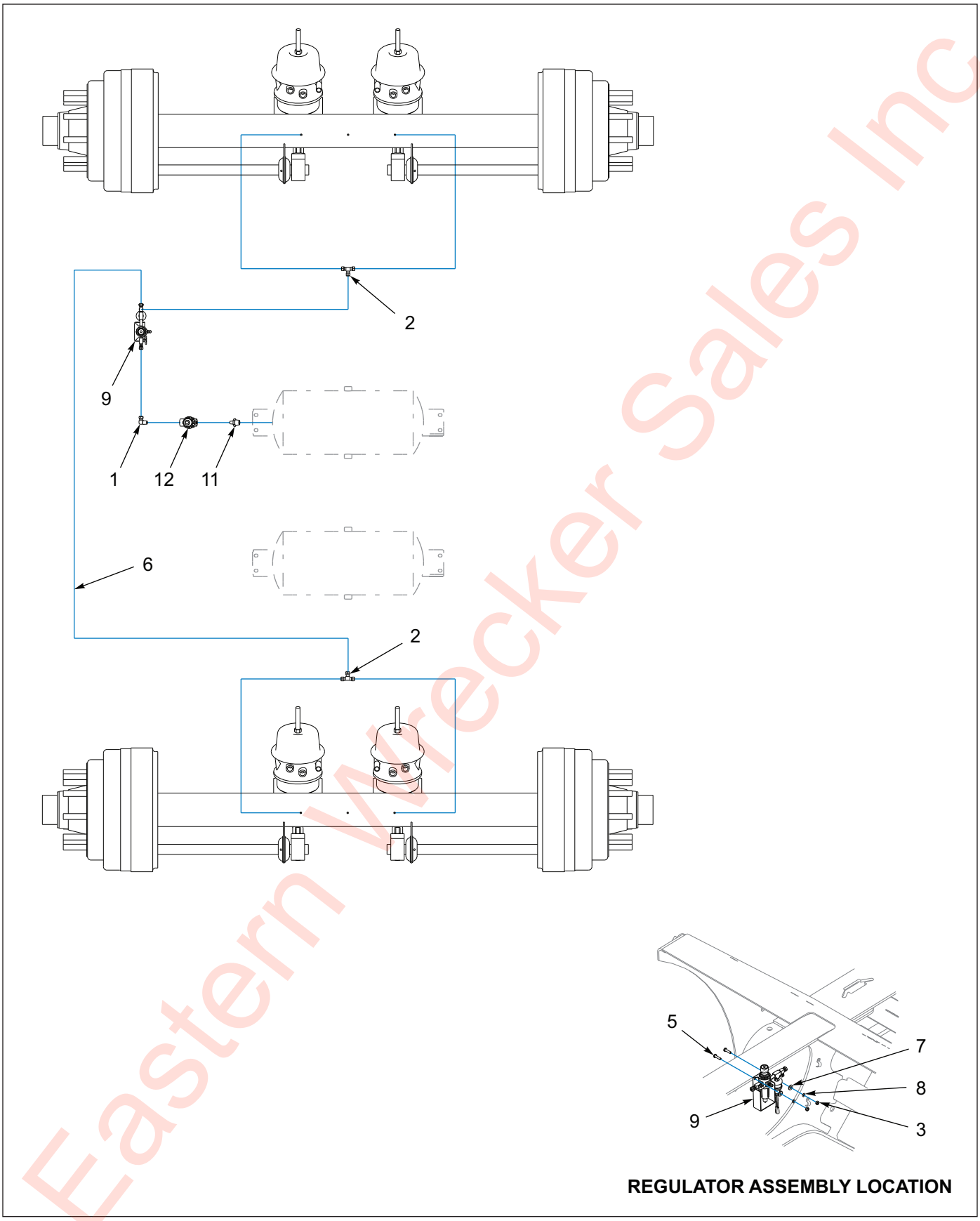

Figure 1-28: Tire Inflation System - 825E

Eastern Wrecker Sales Inc

Tire Inflation System - 825E

ITEM	PART NO.	DESCRIPTION	QTY.
	199755	FRAME ASSY 825E-28	
	199756	FRAME ASSY 825E-30	
	199757	FRAME ASSY 825E-28 I-BEAM	
	199758	FRAME ASSY 825E-30 PLUS 3	
	199759	FRAME ASSY 825E-28 PLUS 3	
	199760	FRAME ASSY 825E-26	
	199761	FRAME ASSY 825E-23 I-BEAM	
	199762	FRAME ASSY 825E-23 P/O GALV	
	199763	FRAME ASSY 825E-23 P/O	
1	1-297-010008-07	FITTING AIR 90 1/4TUBEX1/4NPT	REF
2	1-297-010010-01	FITTING,AIR,UNION TEE 1/4	REF
3	1-512-010007-05	NUT, HEX 1/4-20	REF
4	1-560-010002-04	PLUG, PIPE, 1/2NPT **(NOT SHOWN)**	REF
5	1-654-010047-06	SCREW,HX CP 1/4-20UNCX1 GR5	REF
6	1-833-010001	TUBING NYLON 1/4 OD	REF
7	1-861-010032-07	WASHER,FLAT 1/4 ZP	REF
8	1-861-010034-09	WASHER, LKG HLCL SPR, 1/4	REF
9	157702	TIRE INFLATION SYSTEM 2AX **(SEE PAGE 1-224)**	REF
10	176474	HARNESS KIT TIRE INFL 800 **(NOT SHOWN)**	REF
11	2083-8-4S	NIPPLE HEX 1/2PIPE - 1/4PIPE	REF
12	905-54-107	BRAKE PROTECTION VALVE	REF

Eastern Wrecker Sales Inc

Frame Assemblies - 835E Ag Tandem

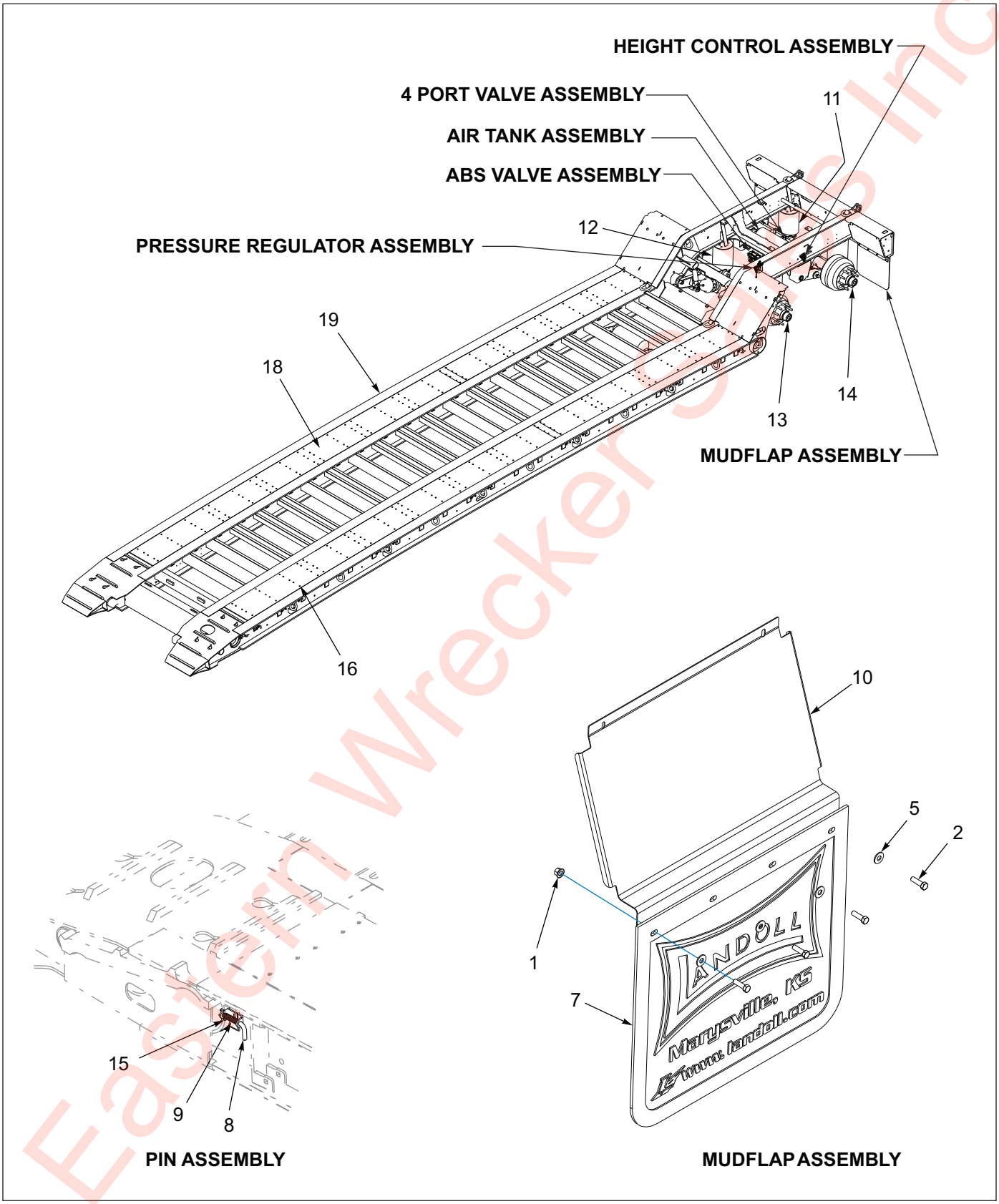

Figure 1-29: General Assembly - 835E Ag Tandem

Eastern Wrecker Sales Inc

General Assembly - 835E Ag Tandem

ITEM	PART NO.	DESCRIPTION	QTY.			
	198168	FRAME ASSY 835EAG-27 GROTE	*			
	198172	FRAME ASSY 835EAG-27 XTRA MBR	*			
	207109	FRAME ASSY 835E-26.5 I-MBR RMP	*			
	207110	FR ASSY835E-26.5 I-MBR RMP GAL	*			
	198169	FRAME ASSY 835EAG-30 GROTE		*		
	198171	FRAME ASSY 835E-30 I-MBR RMP		*		
	198174	FRAME ASSY 835E-30 P/O 96/102		*		
	198179	FRAME ASSY 835EAG-30 GALV		*		
	198180	FRAME ASSY 835EAG-30 RAMP O/R		*		
	198181	FRAME ASSY 835EAG-30 O/R		*		
	204052	FR ASY 835E-30 P/O 96/102		*		
	209563	FRAME ASSY 835E-30 I-MBR RMP		*		
	198173	FRAME ASSY 835E-32 P/O			*	
	198175	FRAME ASSY 835E-32 P/O 96/102			*	
	198176	FRAME ASSY 835E-32 GROTE GALV			*	
	197177	BAR,FLAC TOW			*	
	198178	FRAME ASSY 835E-32 O/R			*	
	202220	FRAME ASSY 835E-32 O/R			*	
	202222	FRAME ASSY GALV 835E-32 O/R			*	
	208090	FRAME ASSY 835E-32 RMP			*	
	198170	FRAME ASSY 835E-27 GROTE O/R				*
1	1-510-010001	NUT, 3/8-16 UNC FLANGE LOCK	8	8	8	8
2	1-654-010051-06	SCREW,HEX CAP 3/8-16UNCX1-1/4	8	8	8	8
3	1-796-010001	TIE WIRE 22 PLASTIC **(NOT SHOWN)**	5	5	5	5
4	1-796-010004-02	TIE, STRAP,PLASTIC .301X13.38 **(NOT SHOWN)**	50	50	50	50
5	1-861-010032-11	WASHER, FLAT 3/8 W ZP/CD	8	8	8	8
6	3-201-010002	CONDUIT 3/8 PLASTIC FLEX **(NOT SHOWN)**	8	8	8	8
7	3-485-010001	FLAP, MUD 21 IN	2	2	2	2
8	104252	PIN P/O EXT LOCK	--	--	--	2
9	104253	SPRING,COMPRESSION P/OEXTLOCK	--	--	--	2
10	105132	SHIELD TAIL LIGHT	2	2	2	2
11	110618	SUSPN, FASTNR,RLU 250-9-4 **(SEE PAGE 1-112)**	REF	REF	REF	REF
12	110622	SUSPN, FASTNR,RLU 250FMT **(SEE PAGE 1-110)**	REF	REF	REF	REF
13	115752	AXLE WLDMT 2516 SPG 79 327FRT	REF	REF	REF	REF
14	115756	AXLE WLDMT 2516 SPG 79 327CTR	REF	REF	REF	REF
15	125520	PIN SPRING SLOTTED 1/8X1-1/2	--	--	--	2
16	158732	SCREW,5/16X2-1/4ZP TORX FLOOR	205	225	235	205
17	187833	CLIP HARNESS, CROSS-MEMBER **(NOT SHOWN)**	--	AR	AR	AR
18	RWD34999	APITONG, 1-1/2 X 7-3/4, NET	105	153	195	105
19	-----	FRAME WELDMENT 835E	REF	REF	REF	REF

Eastern Walker Sales Inc

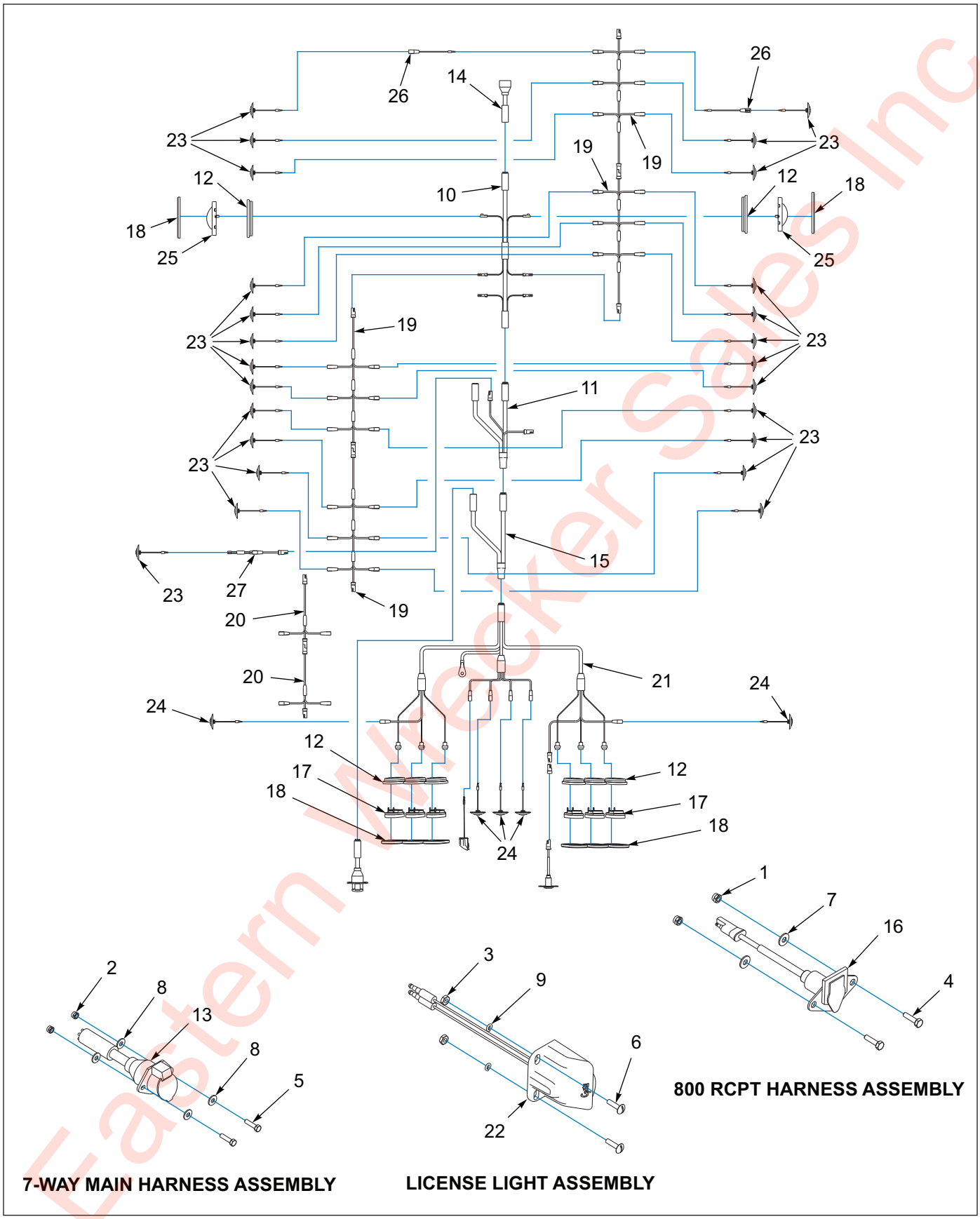

Figure 1-30: Electrical System - 835E Ag Tandem

Eastern Wrecker Sales Inc

Electrical System - 835E Ag Tandem

ITEM	PART NO.	DESCRIPTION	QTY.				
	198168	FRAME ASSY 835EAG-27 GROTE	*				
	198172	FRAME ASSY 835EAG-27 XTRA MBR	*				
	198169	FRAME ASSY 835EAG-30 GROTE		*			
	198173	FRAME ASSY 835E-32 P/O		*			
	198174	FRAME ASSY 835E-30 P/O 96/102		*			
	198175	FRAME ASSY 835E-32 P/O 96/102		*			
	204052	FR ASY 835E-30 P/O 96/102		*			
	208090	FRAME ASSY 835E-32 RMP		*			
	198170	FRAME ASSY 835E-27 GROTE O/R			*		
	198171	FRAME ASSY 835E-30 I-MBR RMP				*	
	198178	FRAME ASSY 835E-32 O/R				*	
	198181	FRAME ASSY 835EAG-30 O/R				*	
	202220	FRAME ASSY 835E-32 O/R				*	
	209563	FRAME ASSY 835E-30 I-MBR RMP				*	
	198180	FRAME ASSY 835EAG-30 RAMP O/R					*
	207109	FRAME ASSY 835E-26.5 I-MBR RMP					*
1	1-512-010005-01	NUT,HEX,SLFLKG GRB 1/4-20	2	2	2	2	2
2	1-512-010005-03	NUT HEX SLFLKG GRB 5/16-18	2	2	2	2	2
3	1-512-010007-03	NUT, HEX 10-24	2	2	2	2	2
4	1-654-010047-06	SCREW,HX CP 1/4-20UNCX1 GR5	2	2	2	2	2
5	1-654-010049-06	SCREW,H/CAP,5/16-18UNCX1-1/4	2	2	2	2	2
6	1-656-010003051	SCREW,RH HD MACH 10-24X3/4	2	2	2	2	2
7	1-861-010032-07	WASHER,FLAT 1/4 ZP	2	2	2	2	2
8	1-861-010032-09	WASHER, FLAT 5/16 W ZP/CD	4	4	4	4	4
9	1-861-010034-07	WASHER,LKG,HLCL SPR, NO 10	2	2	2	2	2
10	143102	HARNESS BED MAIN GROTE	1	1	1	1	1
11	143103	HARNESS ECHAIN GROTE	1	1	1	1	1
12	143114	GROMMET OVAL GROTE **(BEFORE 01/02/20)**	8	8	8	8	8
13	146897	HARNESS 7WAY RECP REAR GROTE	1	1	1	1	1
14	146898	HARNESS 7WAY PLUG G/N GROTE	1	1	1	1	1
15	146929	HARNESS Y SPLITTER GROTE	1	1	1	1	1
16	150116	HARNESS ASSY RCPT 800	1	1	1	1	1
17	179902	LIGHT S/T/T RED CLEAR LENS GRT **(BEFORE 01/02/20)**	6	6	6	6	6
17	213295	LIGHT S/T/T RED CLEAR LENS GRT **(AFTER 01/02/20)**	6	6	6	6	6
18	180570	COV CHROME OBL GROM **(BEFORE 01/02/20)**	8	8	8	8	8
18	213296	COV CHROME OBL GROM **(AFTER 01/02/20)**	8	8	8	8	8
19	187856	HARNESS MARKER MID DECK	3	4	2	2	3
20	187857	HARNESS MARKER ADDITION	2	--	1	4	--
21	187859	HARNESS BUMPER MICRONOVA GROTE	1	1	1	1	1
22	187860	LIGHT ASSY LICENSE LED GROTE	1	1	1	1	1
23	187863	LIGHT YEL LED.75CL/MK CLEAR CB	23	25	15	21	19
24	187864	LIGHT RED LED.75CL/MK CLEAR CB **(AFTER 01/02/20)**	5	5	5	5	5
25	187868	LIGHT MID-TURN LED CLEAR LENS	2	2	2	2	52
26	191568	HARNESS MARKER LAMP MICRONOVA	2	2	2	2	2
27	200037	HARNESS ABS LIGHT SHORT	1	1	1	1	1

Eastern Walker Sales Inc

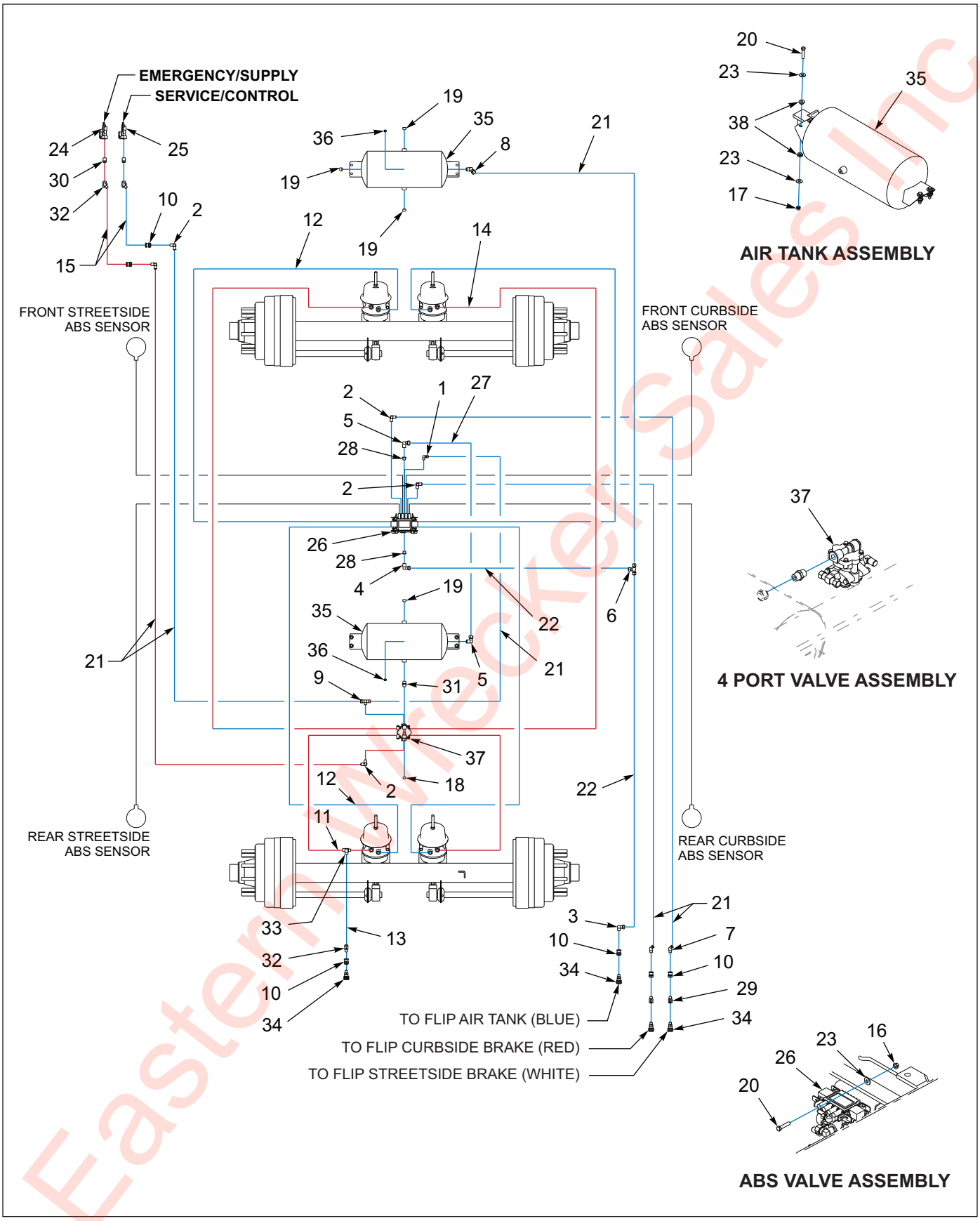

Figure 1-31: Air Brake System - 835E Ag Tandem

Eastern Wrecker Sales Inc

Air Brake System - 835E Ag Tandem

ITEM	PART NO.	DESCRIPTION	QTY.
	198168	FRAME ASSY 835EAG-27 GROTE	
	198169	FRAME ASSY 835EAG-30 GROTE	
	198170	FRAME ASSY 835E-27 GROTE O/R	
	198171	FRAME ASSY 835E-30 I-MBR RMP	
	198172	FRAME ASSY 835EAG-27 XTRA MBR	
	198173	FRAME ASSY 835E-32 P/O	
	198174	FRAME ASSY 835E-30 P/O 96/102	
	198175	FRAME ASSY 835E-32 P/O 96/102	
	198176	FRAME ASSY 835E-32 GROTE GALV	
	198177	FRAME ASSY 835E-32 96/102 GALV	
	198178	FRAME ASSY 835E-32 O/R	
	198179	FRAME ASSY 835EAG-30 GALV	
	198180	FRAME ASSY 835EAG-30 RAMP O/R	
	198181	FRAME ASSY 835EAG-30 O/R	
	202220	FRAME ASSY 835E-32 O/R	
	202222	FRAME ASSY GALV 835E-32 O/R	
	204052	FR ASY 835E-30 P/O 96/102	
	205873	FRAME WLDMT 835E-26.5 I-MBR	
	207110	FR ASSY835E-26.5 I-MBR RMP GAL	
	208090	FRAME ASSY 835E-32 RMP	
	209563	FRAME ASSY 835E-30 I-MBR RMP	
1	1-297-010008-18	FITTING,AIR 90 3/8TUBEX1/4NPT	1
2	1-297-010008-20	FITTING,AIR 90 3/8TUBEX3/8NPT	5
3	1-297-010008-23	FITTING,AIR 90 1/2TUBEX3/8NPT	1
4	1-297-010008-24	FITTING,AIR 90 1/2TUBEX1/2NPT	1
5	1-297-010008-26	FITTING AIR 5/8TUBE X1/2NPT90	2
6	1-297-010010-06	FITTING,AIR UNION TEE 1/2	1
7	1-297-010013-12	FITTING AIR 45 M/ELB3/8TX3/8P	2
8	1-297-010013-16	FITTING,AIR 1/2X1/2 45 M/ELB	1
9	1-297-010015-07	FITTING,AIR,BR TEE 3/8T-3/8P	1
10	1-297-010022-03	FITTING,AIR ANCHR CPLG, 3/8NPT	6
11	1-384-010038024	HOSE ASM AIR 3/8X24,W/3/8 END	2
12	1-384-010038038	HOSE ASM AIR 3/8X38,W/3/8 END	4
13	1-384-010038054	HOSE ASM AIR 3/8X54,W/3/8 END	1
14	1-384-010038060	HOSE ASM AIR 3/8X60,W/3/8 END	2
15	1-384-010038084	HOSE ASM AIR 3/8X84,W/3/8 END	2
16	1-510-010001	NUT, 3/8-16 UNC FLANGE LOCK	2
17	1-512-010005-05	NUT, HEX, SLFLKG GRB 3/8-16	8
18	1-560-010002-03	PLUG, PIPE, 3/8NPTF	1
19	1-560-010002-04	PLUG, PIPE, 1/2NPT	4
20	1-654-010051-08	SCREW,HEX CAP,3/8-16X1-3/4 G	10
21	1-833-010002	TUBING NYLON 3/8 OD	68
22	1-833-010003	TUBING NYLON 1/2 OD	5
23	1-861-010032-11	WASHER, FLAT 3/8 W ZP/CD	18
24	108801	GLAD HAND-RED-AIR	1
25	108802	GLAD HAND-BLUE-AIR	1
26	114584	ABS KIT WABCO 4S/2M TAB **(SEE PAGE 1-106)**	1
27	117304	TUBING NYLON 5/8	3
28	118-2659-9	BUSHING 1/2NPTX3/4NPT STL	2

Eastern Trailer Sales Inc

Air Brake System - 835E Ag Tandem

ITEM	PART NO.	DESCRIPTION	QTY.
29	163578	VALVE MINI BALL AIR 3/8NPT	2
30	2081-8-6S	REDUCER 1/2NPT X 3/8NPT	2
31	2083-8-8S	NIPPLE 1/2NPTX1/2NPT	1
32	2088-6-6S	ADAPTER 45 3/8MPTX3/8FPT	3
33	2092-6-6S	TEE,#6NPT,1MALE, 2 FEMALE	1
34	3-220-010004	COUPLER AIR FEMALE 3/8-18MPT	4
35	3-780-010002	TANK AIR 9.5X22.5 .5NPT PORTS	2
36	56D4	COCK,DRAIN AIR TANK VEL036019	2
37	758-181	VALVE TASK 4 PORT	1
38	805-2	BUSHINGS, STEP	16

Eastern Wrecker Sales Inc

Table provided for general use.

NOTES:

Eastern Wrecker Sales Inc

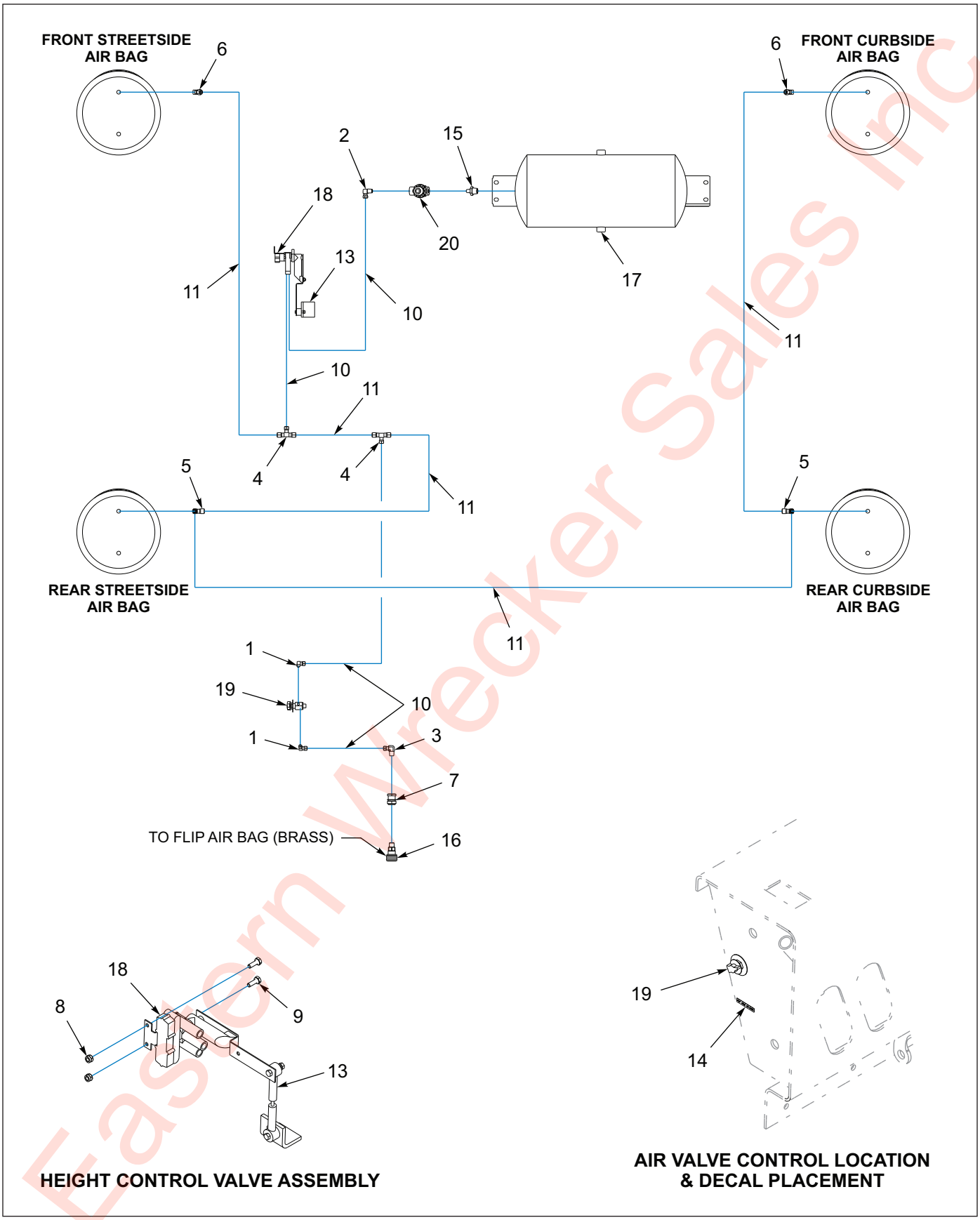

Figure 1-32: Air Ride Suspension - 835E Ag Tandem

Eastern Wrecker Sales Inc

Air Ride Suspension - 835E Ag Tandem

ITEM	PART NO.	DESCRIPTION	QTY.
	198168	FRAME ASSY 835EAG-27 GROTE	
	198169	FRAME ASSY 835EAG-30 GROTE	
	198170	FRAME ASSY 835E-27 GROTE O/R	
	198171	FRAME ASSY 835E-30 I-MBR RMP	
	198172	FRAME ASSY 835EAG-27 XTRA MBR	
	198173	FRAME ASSY 835E-32 P/O	
	198174	FRAME ASSY 835E-30 P/O 96/102	
	198175	FRAME ASSY 835E-32 P/O 96/102	
	198176	FRAME ASSY 835E-32 GROTE GALV	
	198177	FRAME ASSY 835E-32 96/102 GALV	
	198178	FRAME ASSY 835E-32 O/R	
	198179	FRAME ASSY 835EAG-30 GALV	
	198180	FRAME ASSY 835EAG-30 RAMP O/R	
	198181	FRAME ASSY 835EAG-30 O/R	
	202220	FRAME ASSY 835E-32 O/R	
	202222	FRAME ASSY GALV 835E-32 O/R	
	204052	FR ASY 835E-30 P/O 96/102	
	205873	FRAME WLDMT 835E-26.5 I-MBR	
	207110	FR ASSY835E-26.5 I-MBR RMP GAL	
	208090	FRAME ASSY 835E-32 RMP	
	209563	FRAME ASSY 835E-30 I-MBR RMP	
1	1-297-010008-05	FITTING,AIR 90 1/4TUBEX1/8NPT	2
2	1-297-010008-07	FITTING AIR 90 1/4TUBEX1/4NPT	1
3	1-297-010008-09	FITTING,AIR 90 1/4TUBEX3/8NPT	1
4	1-297-010010-04	FITTING,AIR,UN/TEE3/8X3/8X1/4	2
5	1-297-010011-04	FITTING,AIR,M/RUN TEE 3/8-1/4	2
6	1-297-010013-11	FITTING,AIR,45 M/ELB3/8T-1/4P	2
7	1-297-010022-03	FITTING,AIR ANCHR CPLG, 3/8NPT	1
8	1-512-010005-01	NUT,HEX,SLFLKG GRB 1/4-20	REF
9	1-654-010047-04	SCREW,HEX CAP,1/4-20X3/4 GR5	REF
10	1-833-010001	TUBING NYLON 1/4 OD	15
11	1-833-010002	TUBING NYLON 3/8 OD	13
12	102732	AIR CONTROL KIT **(ITEMS 13, 18, & 20) (SEE PAGE 1-107)**	1
13	111021	KIT SRK-167 NEWAY 952-50-001	REF
14	168973	DECAL FLIP AXLE AIR BAGS	1
15	2083-8-4S	NIPPLE HEX 1/2PIPE - 1/4PIPE	1
16	3-220-010004	COUPLER AIR FEMALE 3/8-18MPT	1
17	3-780-010002	TANK AIR 9.5X22.5 .5NPT PORTS	REF
18	900 54 007	HEIGHT CONTROL VALVE N	REF
19	900-54-088	VALVE, MANUAL OPERATED	1
20	905-54-107	BRAKE PROTECTION VALVE	REF

Eastern Wheeler Sales Inc

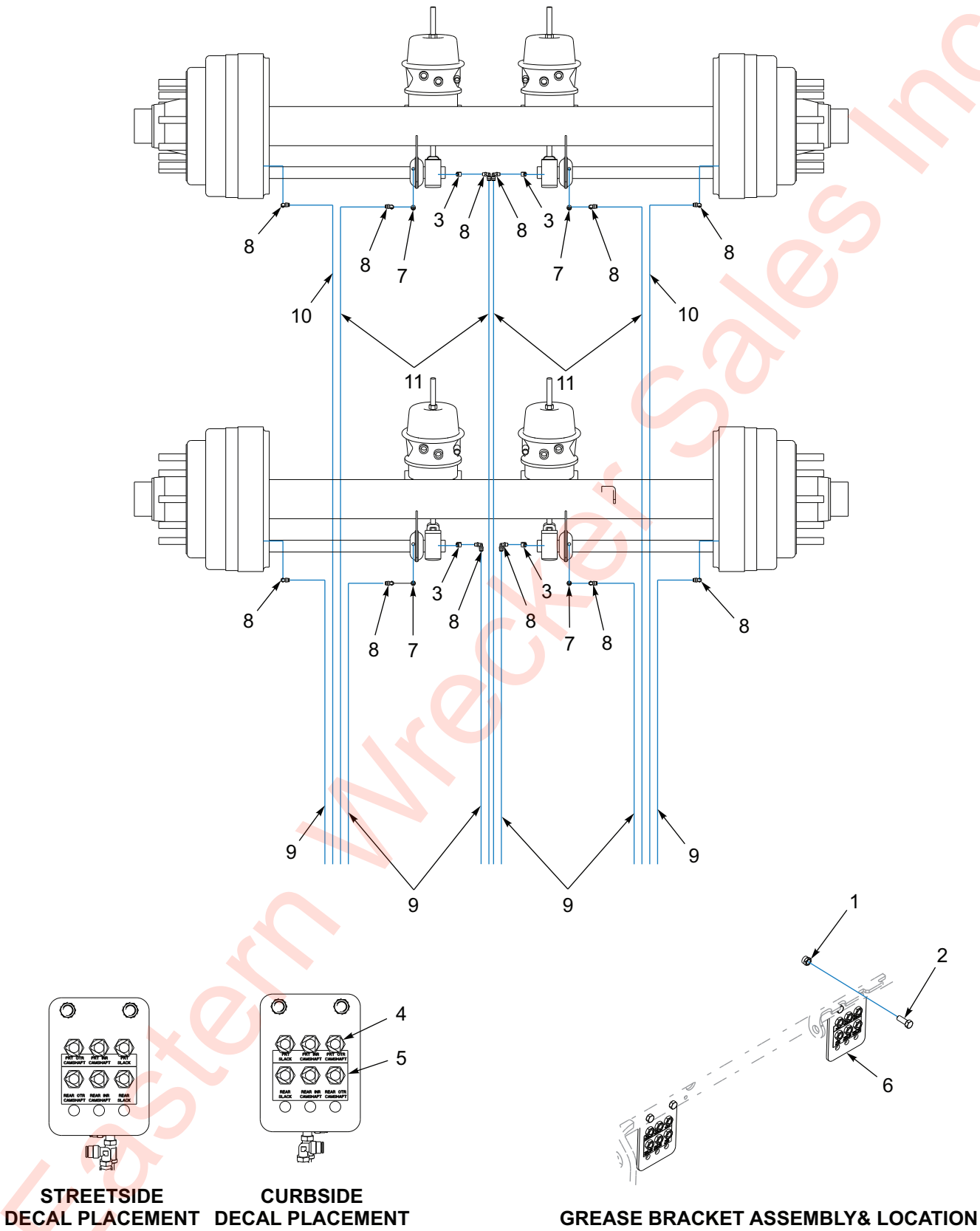

Figure 1-33: Grease Assembly - 835E Ag Tandem

Eastern Wrecker Sales Inc

Grease Assembly - 835E Ag Tandem

ITEM	PART NO.	DESCRIPTION	QTY.
	198168	FRAME ASSY 835EAG-27 GROTE	
	198169	FRAME ASSY 835EAG-30 GROTE	
	198170	FRAME ASSY 835E-27 GROTE O/R	
	198171	FRAME ASSY 835E-30 I-MBR RMP	
	198172	FRAME ASSY 835EAG-27 XTRA MBR	
	198173	FRAME ASSY 835E-32 P/O	
	198174	FRAME ASSY 835E-30 P/O 96/102	
	198175	FRAME ASSY 835E-32 P/O 96/102	
	198176	FRAME ASSY 835E-32 GROTE GALV	
	198177	FRAME ASSY 835E-32 96/102 GALV	
	198178	FRAME ASSY 835E-32 O/R	
	198179	FRAME ASSY 835EAG-30 GALV	
	198180	FRAME ASSY 835EAG-30 RAMP O/R	
	198181	FRAME ASSY 835EAG-30 O/R	
	202220	FRAME ASSY 835E-32 O/R	
	202222	FRAME ASSY GALV 835E-32 O/R	
	204052	FR ASY 835E-30 P/O 96/102	
	205873	FRAME WLDMT 835E-26.5 I-MBR	
	207110	FR ASSY835E-26.5 I-MBR RMP GAL	
	208090	FRAME ASSY 835E-32 RMP	
	209563	FRAME ASSY 835E-30 I-MBR RMP	
1	1-512-010005-05	NUT, HEX, SLFLKG GRB 3/8-16	4
2	1-654-010051-05	SCREW,HEX CAP 3/8-16UNCX1 GR5	4
3	101528	ELBOW,BRASS PIPE STREET	4
4	142545	NUT 7/16 FOR BULKHEAD	12
5	142553	DECAL, GREASE TRL U/C	2
6	146922	BRACKET BULKHEAD GREASE LINE	2
7	202094	ADAPTER 5/16--18X1/8NPT F	4
8	202099	FITTING GREASE 90 SWIV PTC 1/8	12
9	202102	HOSE ASSY GREASE 1/8 X 36	6
10	202111	HOSE ASSY GREASE 1/8 X 102	2
11	202112	HOSE ASSY GREASE 1/8 X 118	4

Eastern Trailer Sales Inc

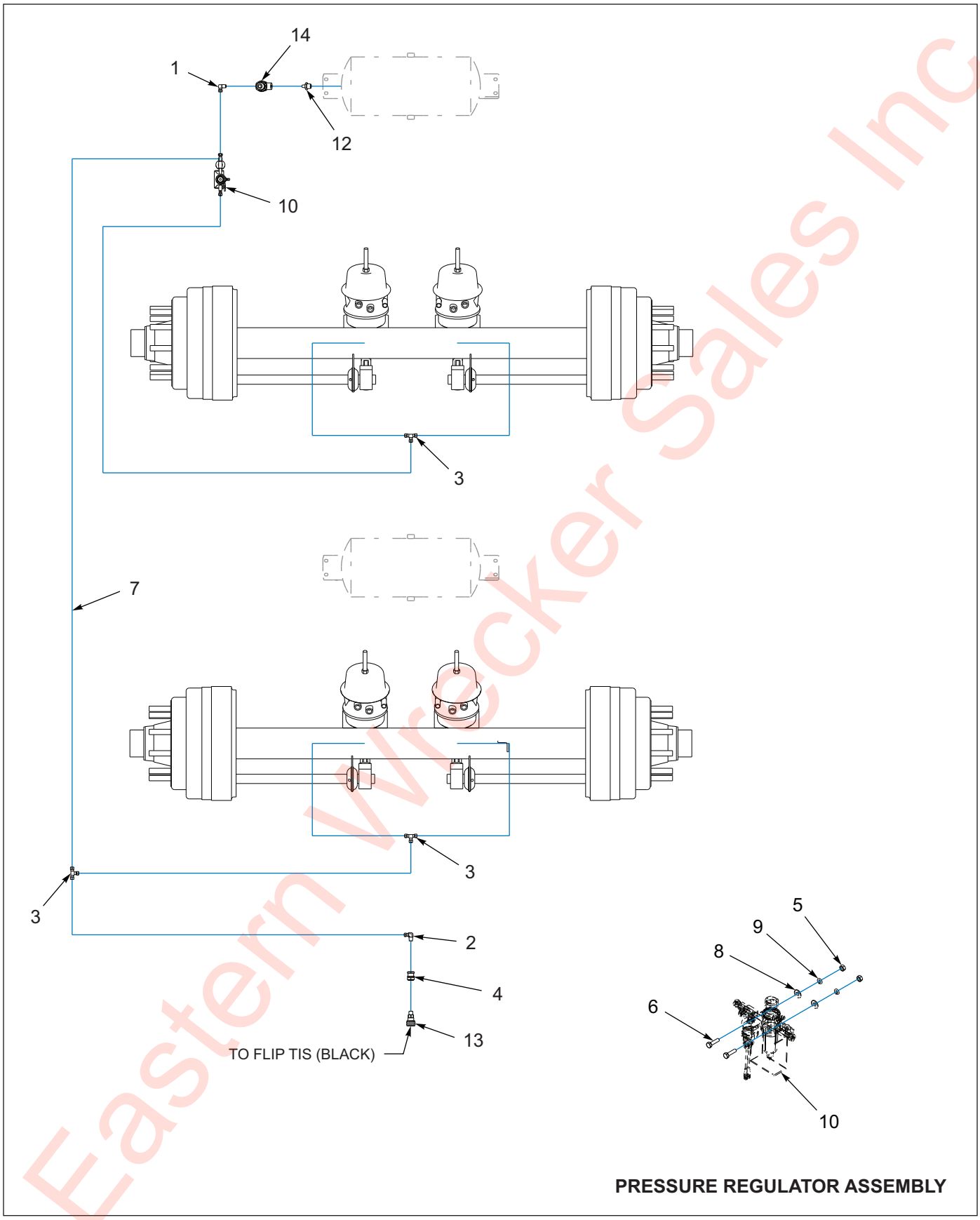

Figure 1-34: Tire Inflation System - 835E Ag Tandem

Eastern Wrecker Sales Inc

Tire Inflation System - 835E Ag Tandem

ITEM	PART NO.	DESCRIPTION	QTY.
	198168	FRAME ASSY 835EAG-27 GROTE	
	198169	FRAME ASSY 835EAG-30 GROTE	
	198170	FRAME ASSY 835E-27 GROTE O/R	
	198171	FRAME ASSY 835E-30 I-MBR RMP	
	198172	FRAME ASSY 835EAG-27 XTRA MBR	
	198173	FRAME ASSY 835E-32 P/O	
	198174	FRAME ASSY 835E-30 P/O 96/102	
	198175	FRAME ASSY 835E-32 P/O 96/102	
	198176	FRAME ASSY 835E-32 GROTE GALV	
	198177	FRAME ASSY 835E-32 96/102 GALV	
	198178	FRAME ASSY 835E-32 O/R	
	198179	FRAME ASSY 835EAG-30 GALV	
	198180	FRAME ASSY 835EAG-30 RAMP O/R	
	198181	FRAME ASSY 835EAG-30 O/R	
	202220	FRAME ASSY 835E-32 O/R	
	202222	FRAME ASSY GALV 835E-32 O/R	
	204052	FR ASY 835E-30 P/O 96/102	
	205873	FRAME WLDMT 835E-26.5 I-MBR	
	207110	FR ASSY835E-26.5 I-MBR RMP GAL	
	208090	FRAME ASSY 835E-32 RMP	
	209563	FRAME ASSY 835E-30 I-MBR RMP	
1	1-297-010008-07	FITTING AIR 90 1/4TUBEX1/4NPT	REF
2	1-297-010008-09	FITTING,AIR 90 1/4TUBEX3/8NPT	REF
3	1-297-010010-01	FITTING,AIR,UNION TEE 1/4	REF
4	1-297-010022-03	FITTING,AIR ANCHR CPLG, 3/8NPT	REF
5	1-512-010007-05	NUT, HEX 1/4-20	REF
6	1-654-010047-06	SCREW,HX CP 1/4-20UNCX1 GR5	REF
7	1-833-010001	TUBING NYLON 1/4 OD	REF
8	1-861-010032-07	WASHER,FLAT 1/4 ZP	REF
9	1-861-010034-09	WASHER, LKG HLCL SPR, 1/4	REF
10	157702	TIRE INFLATION SYSTEM 2AX **(SEE PAGE 1-225)**	REF
11	176474	HARNESS KIT TIRE INFL 800 **(NOT SHOWN)**	REF
12	2083-8-4S	NIPPLE HEX 1/2PIPE - 1/4PIPE	REF
13	3-220-010004	COUPLER AIR FEMALE 3/8-18MPT	REF
14	905-54-107	BRAKE PROTECTION VALVE	REF

Eastern Wholesale Sales Inc

Frame Assemblies - 835E HD Ag Triple

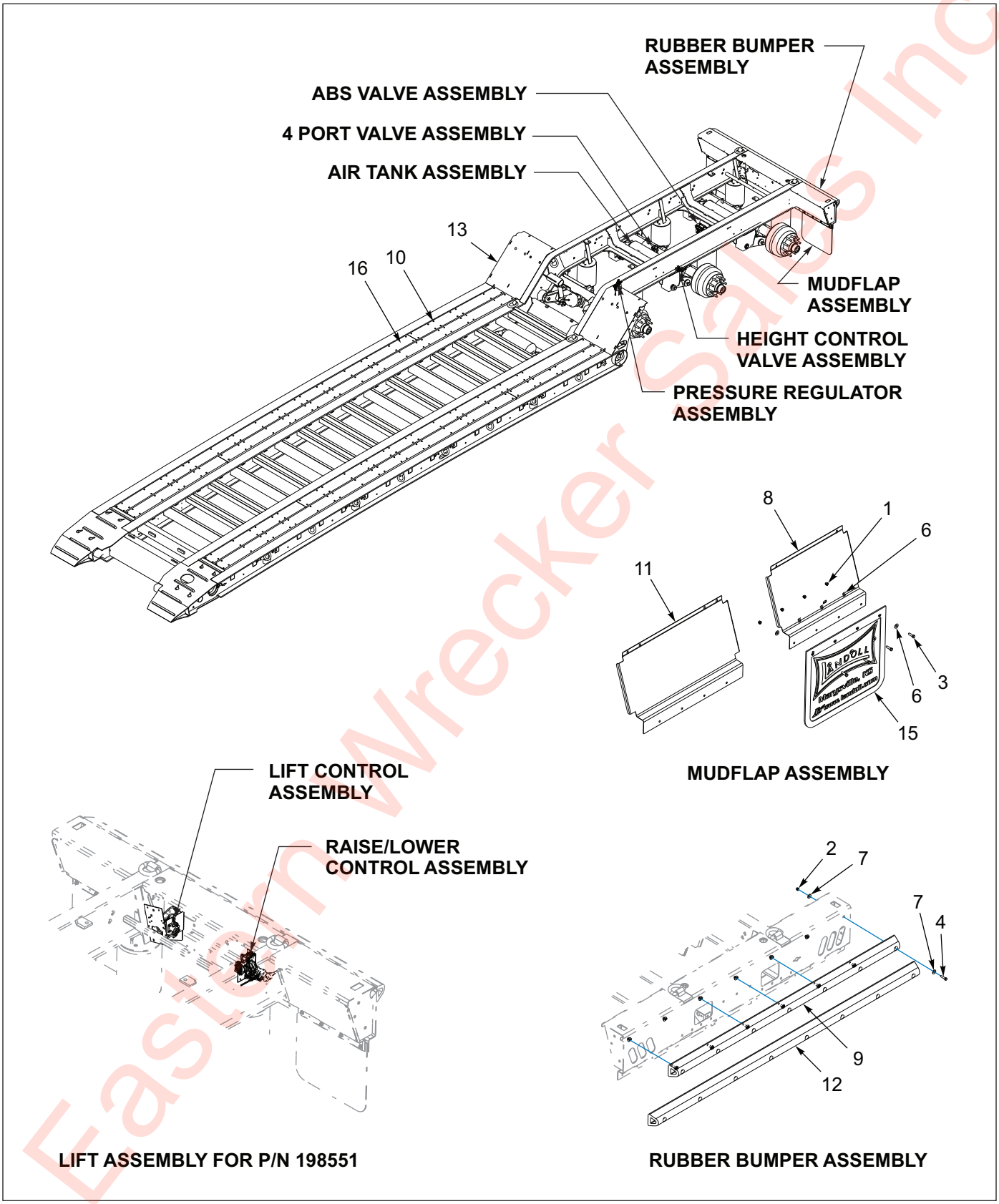

Figure 1-35: General Assembly - 835E HD Ag Triple

Eastern Wrecker Sales Inc

General Assembly - 835E HD Ag Triple

ITEM	PART NO.	DESCRIPTION	QTY.	
	198549	FRAME ASSY 835EAG-R26 GROTE	*	
	198550	FRAME ASSY 835EAG-R27 GROTE	*	
	198551	FRAME ASSY 835EAG-R26 LIFT2&3	*	
	198634	FRAME ASSY 835EAG-R26 GRT GALV	*	
	201063	FRAME ASSY HD 835EAG-R27 GROTE	*	
	201064	FRAME ASSY HD835EAG-R26-102	*	
	198552	FRAME ASSY 835EAG-R26-120		*
	198553	FRAME ASSY 835EAG-R27-120-54AX		*
	198554	FRAME ASSY HD835EAG-R26-120		*
	198633	FRAMEASSY835EAG-R27-120-54AXGA		*
1	1-512-010005-05	NUT, HEX, SLFLKG GRB 3/8-16	8	8
2	1-512-010005-09	NUT,HEX,SLFLKG, 1/2-13 GRB	7	8
3	1-654-010051-06	SCREW,HEX CAP 3/8-16UNCX1-1/4	8	8
4	1-654-010055-05	SCREW,HEX CAP,1/2-13UNCX2 GR5	7	8
5	1-796-010001	TIE WIRE 22 PLASTIC **(NOT SHOWN)**	5	5
6	1-861-010032-11	WASHER, FLAT 3/8 W ZP/CD	16	16
7	1-861-010032-15	WASHER, FLAT 1/2 W ZP/CD	14	16
8	105132	SHIELD TAIL LIGHT	2	--
9	106611	BUMPER,REAR TRL 825	1	--
10	158732	SCREW,5/16X2-1/4ZP TORX FLOOR	205	320
11	164597	SHIELD TAIL LIGHT 855-10W	--	2
12	179014	BUMPER, REAR TRL 835-10'	--	1
13	-----	FRAME WELDMENT 835E HD	REF	REF
14	3-201-010002	CONDUIT 3/8 PLASTIC FLEX **(NOT SHOWN)**	8	8
15	3-485-010001	FLAP, MUD 21 IN	2	2
16	RWD34999	APITONG, 1-1/2 X 7-3/4 NET	105	205

Eastern Wrecker Sales Inc

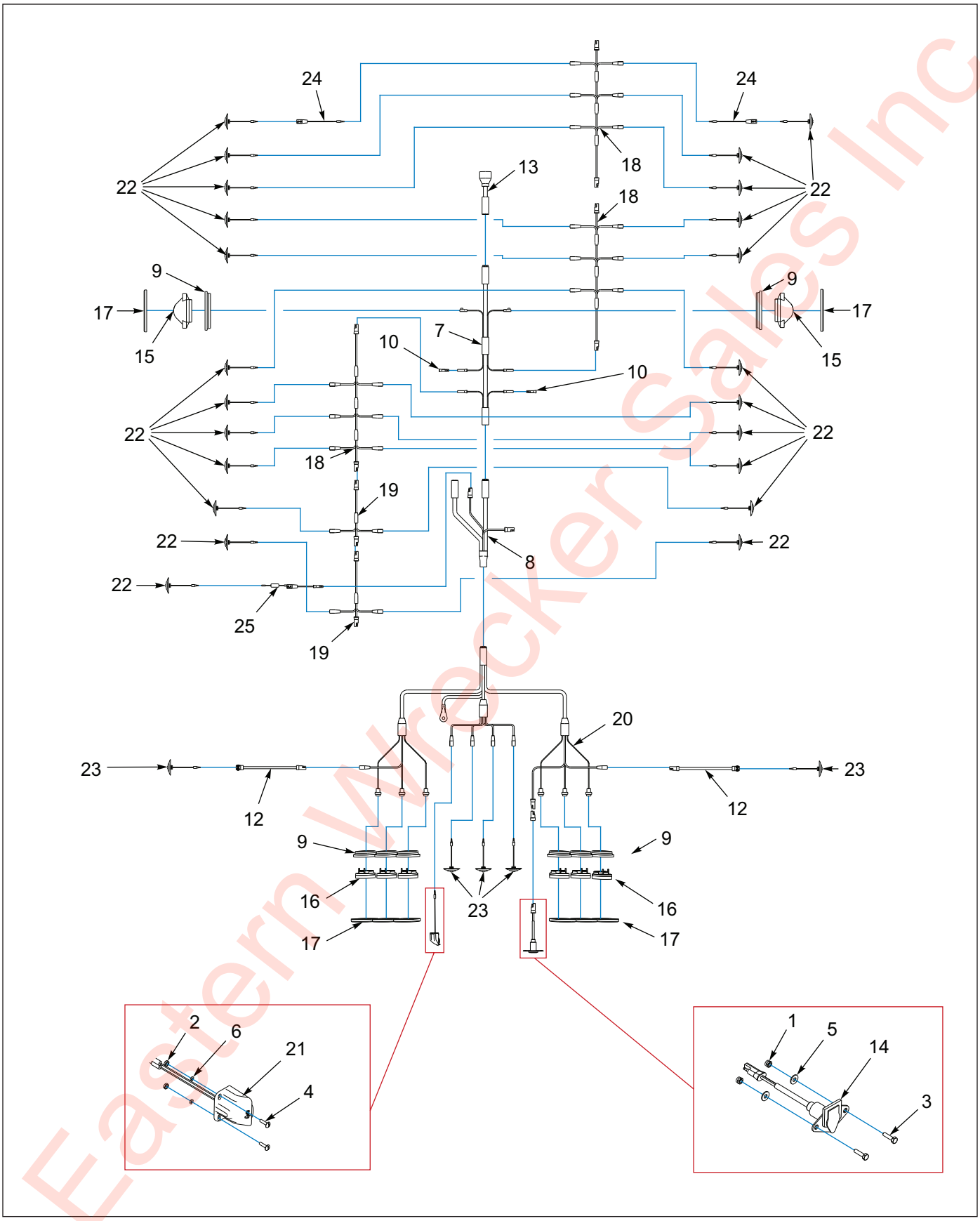

Figure 1-36: Electrical System - 835E HD Ag Triple

Eastern Wrecker Sales Inc

Electrical System - 835E HD Ag Triple

ITEM	PART NO.	DESCRIPTION	QTY.	
	198549	FRAME ASSY 835EAG-R26 GROTE	*	
	198551	FRAME ASSY 835EAG-R26 LIFT2&3	*	
	198552	FRAME ASSY 835EAG-R26-120	*	
	198554	FRAME ASSY HD835EAG-R26-120	*	
	198634	FRAME ASSY 835EAG-R26 GRT GALV	*	
	201064	FRAME ASSY HD835EAG-R26-102	*	
	198550	FRAME ASSY 835EAG-R27 GROTE		*
	198553	FRAME ASSY 835EAG-R27-120-54AX		*
	198633	FRAMEASSY835EAG-R27-120-54AXGA		*
	201063	FRAME ASSY HD 835EAG-R27 GROTE		*
1	1-512-010005-01	NUT,HEX,SLFLKG GRB 1/4-20	2	2
2	1-512-010007-03	NUT, HEX 10-24	2	2
3	1-654-010047-06	SCREW,HX CP 1/4-20UNCX1 GR5	2	2
4	1-656-010003051	SCREW,RH HD MACH 10-24X3/4	2	2
5	1-861-010032-07	WASHER,FLAT 1/4 ZP	2	2
6	1-861-010034-07	WASHER,LKG,HLCL SPR, NO 10	2	2
7	143102	HARNESS BED MAIN GROTE	1	1
8	143103	HARNESS ECHAIN GROTE	1	1
9	143114	GROMMET OVAL GROTE **(BEFORE 01/02/20)**	8	8
10	143121	DUMMY PLUG MALE/FEM BULLET	REF	REF
11	143123	GREASE DIELECTRIC 4 OZ TUBE **(NOT SHOWN)**	.5	.5
12	144609	MARKER LAMP PIGTAIL HARNESS	2	2
13	146898	HARNESS 7WAY PLUG G/N GROTE	1	1
14	150116	HARNESS ASSY RCPT 800	1	1
15	169410	LIGHT YEL MID TURN GROTE	2	2
16	179902	LIGHT S/T/T RED CLEAR LENS GRT **(BEFORE 01/02/20)**	6	6
16	213295	LIGHT S/T/T RED CLEAR LENS GRT **(AFTER 01/02/20)**	6	6
17	180570	COVER CHROME OBLONG GROMMET **(BEFORE 01/02/20)**	8	8
17	213296	COVER CHROME OBLONG GROMMET **(AFTER 01/02/20)**	8	8
18	187856	HARNESS MARKER MID DECK	3	3
19	187857	HARNESS MARKER ADDITION	2	1
20	187859	HARNESS BUMPER MICRONOVA GROTE	1	1
21	187860	LIGHT ASSY LICENSE LED GROTE	1	1
22	187863	LIGHT YEL LED.75CL/MK CLEAR CB	23	21
23	187864	LIGHT RED LED.75CL/MK CLEAR CB **(BEFORE 01/02/20)**	5	5
23	213298	LIGHT RED LED.75CL/MK CLEAR CB **(AFTER 01/02/20)**	5	5
24	191568	HARNESS MARKER LAMP MICRONOVA	2	2
25	200037	HARNESS ABS LIGHT SHORT	1	1
26	43029	HOSE WRAP AEROQUIP 1/4 **(NOT SHOWN)**	3	3

Eastern Tracker Sales Inc

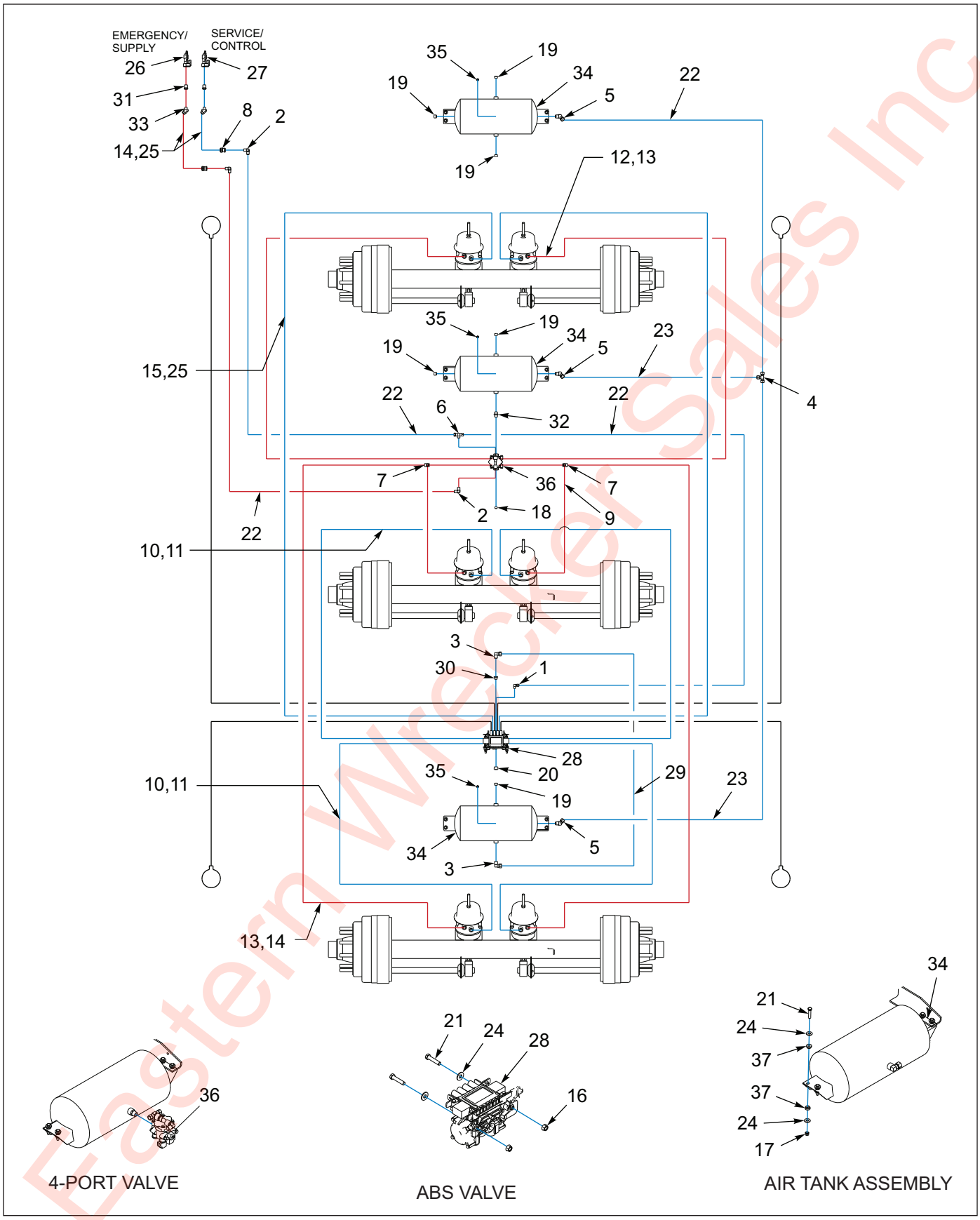

Eastern Wrecker Sales Inc

Figure 1-37: Standard Air Brake System - 835E HD Ag Triple

Standard Air Brake System - 835E HD Ag Triple

ITEM	PART NO.	DESCRIPTION	QTY.		
	198549	FRAME ASSY 835EAG-R26 GROTE	*		
	198550	FRAME ASSY 835EAG-R27 GROTE	*		
	198634	FRAME ASSY 835EAG-R26 GRT GALV	*		
	201063	FRAME ASSY HD 835EAG-R27 GROTE	*		
	198522	BUMPER 855EHD 108"W		*	
	198553	FRAME ASSY 835EAG-R27-120-54AX		*	
	198633	FRAMEASSY835EAG-R27-120-54AXGA		*	
	198544	WEB OUTER 835AG-R27			*
	201064	FRAME ASSY HD835EAG-R26-1024			*
1	1-297-010008-18	FITTING,AIR 90 3/8TUBEX1/4NPT	1	1	1
2	1-297-010008-20	FITTING,AIR 90 3/8TUBEX3/8NPT	3	3	3
3	1-297-010008-26	FITTING AIR 5/8TUBE X1/2NPT90	2	2	2
4	1-297-010010-06	FITTING,AIR UNION TEE 1/2	1	1	1
5	1-297-010013-16	FITTING,AIR 1/2X1/2 45 M/ELB	3	3	3
6	1-297-010015-07	FITTING,AIR,BR TEE 3/8T-3/8P	1	1	1
7	1-297-010018-03	FITTING,3/8 BRASS PIPE,ST TEE	2	2	2
8	1-297-010022-03	FITTING,AIR ANCHR CPLG, 3/8NPT	2	2	2
9	1-384-010038024	HOSE ASM AIR 3/8X24,W/3/8 END	2	2	2
10	1-384-010038038	HOSE ASM AIR 3/8X38,W/3/8 END	4	--	--
11	1-384-010038042	HOSE ASM AIR 3/8X42,W/3/8 END	--	4	4
12	1-384-010038060	HOSE ASM AIR 3/8X60,W/3/8 END	2	--	--
13	1-384-010038072	HOSE ASM AIR 3/8X72,W/3/8 END	2	2	2
14	1-384-010038084	HOSE ASM AIR 3/8X84,W/3/8 END	2	4	2
15	1-384-010038120	HOSE ASM AIR 3/8X120,W/3/8 END	--	2	2
16	1-510-010001	NUT, 3/8-16 UNC FLANGE LOCK	2	2	2
17	1-512-010005-05	NUT, HEX, SLFLKG GRB 3/8-16	12	12	12
18	1-560-010002-03	PLUG, PIPE, 3/8NPTF	1	1	1
19	1-560-010002-04	PLUG, PIPE, 1/2NPT	6	6	6
20	1-560-010002-05	PLUG,PIPE, 3/4-14NPTF	1	1	1
21	1-654-010051-08	SCREW,HEX CAP,3/8-16X1-3/4 G	14	14	14
22	1-833-010002	TUBING NYLON 3/8 OD	43	43	43
23	1-833-010003	TUBING NYLON 1/2 OD	15	15	15
24	1-861-010032-11	WASHER, FLAT 3/8 W ZP/CD	26	26	26
25	103738	HOSE ASM AIR 3/8X100,W/3/8 END	2	--	2
26	108801	GLAD HAND-RED-AIR	1	1	1
27	108802	GLAD HAND-BLUE-AIR	1	1	1
28	114586	ABS KIT WABCO 4S/2MTRI/SPREAD **(SEE PAGE 1-106)**	1	1	1
29	117304	TUBING NYLON 5/8	3	3	3
30	118-2659-9	BUSHING 1/2NPTX3/4NPT STL	1	1	1
31	2081-8-6S	REDUCER 1/2NPT X 3/8NPT	2	2	2
32	2083-8-8S	NIPPLE 1/2NPTX1/2NPT	1	1	1
33	2088-6-6S	ADAPTER 45 3/8MPTX3/8FPT	2	2	2
34	3-780-010002	TANK AIR 9.5X22.5 .5NPT PORTS	3	3	3
35	56D4	COCK,DRAIN AIR TANK VEL036019	3	3	3
36	758-181	VALVE TASK 4 PORT	1	1	1
37	805-2	BUSHINGS, STEP	24	24	24

Eastern Implement Sales Inc

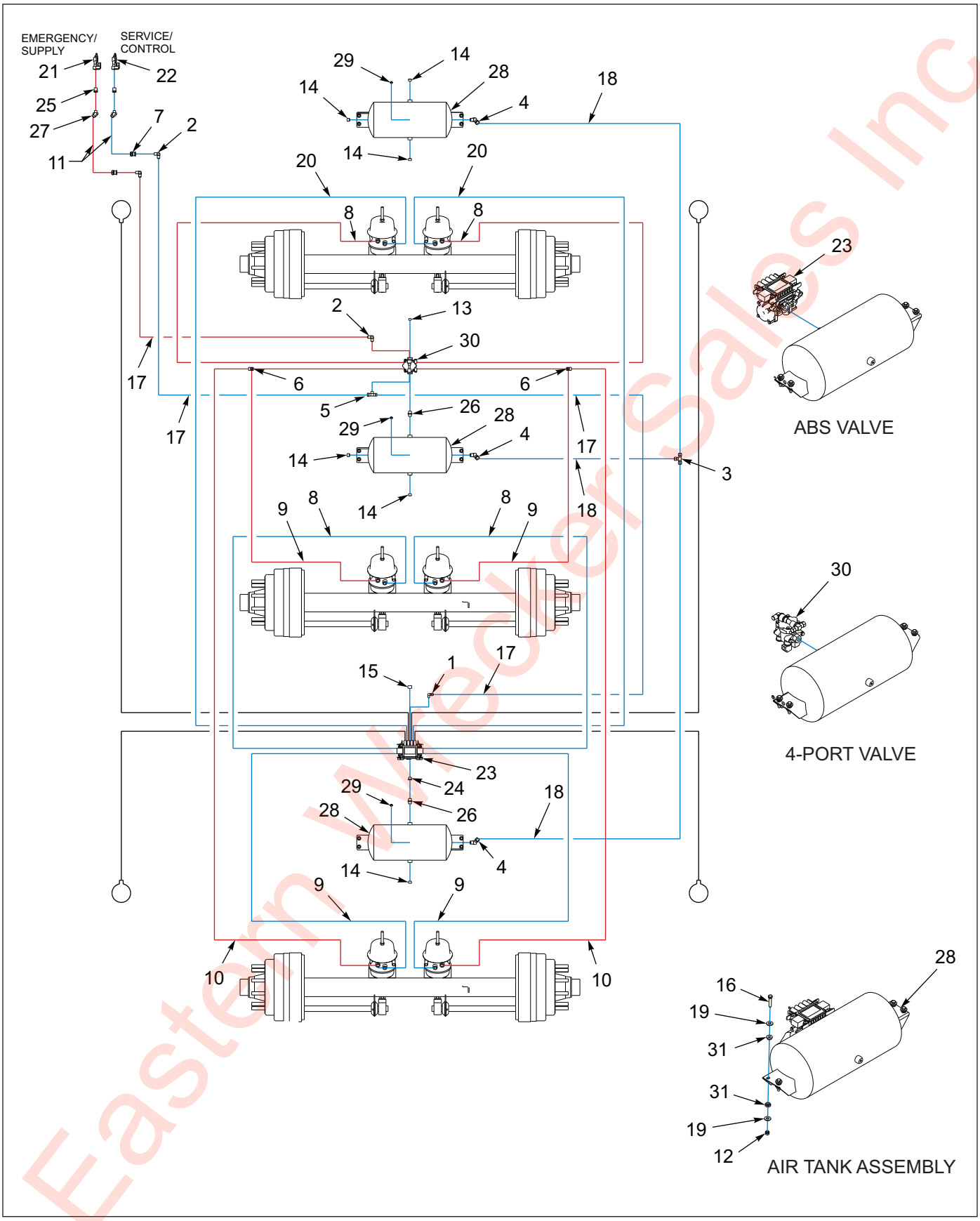

Figure 1-38: Lift Air Brake System - 835E HD Ag Triple

Eastern Wrecker Sales Inc

Lift Air Brake System - 835E HD Ag Triple

ITEM	PART NO.	DESCRIPTION	QTY.
	198551	FRAME ASSY 835EAG-R26 LIFT2&3	
1	1-297-010008-18	FITTING,AIR 90 3/8TUBEX1/4NPT	1
2	1-297-010008-20	FITTING,AIR 90 3/8TUBEX3/8NPT	3
3	1-297-010010-06	FITTING,AIR UNION TEE 1/2	1
4	1-297-010013-16	FITTING,AIR 1/2X1/2 45 M/ELB	3
5	1-297-010015-07	FITTING,AIR,BR TEE 3/8T-3/8P	1
6	1-297-010018-03	FITTING,3/8 BRASS PIPE,ST TEE	2
7	1-297-010022-03	FITTING,AIR ANCHR CPLG, 3/8NPT	2
8	1-384-010038038	HOSE ASM AIR 3/8X38,W/3/8 END	4
9	1-384-010038060	HOSE ASM AIR 3/8X60,W/3/8 END	4
10	1-384-010038072	HOSE ASM AIR 3/8X72,W/3/8 END	2
11	1-384-010038084	HOSE ASM AIR 3/8X84,W/3/8 END	2
12	1-512-010005-05	NUT, HEX, SLFLKG GRB 3/8-16	12
13	1-560-010002-03	PLUG, PIPE, 3/8NPTF	1
14	1-560-010002-04	PLUG, PIPE, 1/2NPT	6
15	1-560-010002-05	PLUG,PIPE, 3/4-14NPTF	1
16	1-654-010051-08	SCREW,HEX CAP,3/8-16X1-3/4 G	12
17	1-833-010002	TUBING NYLON 3/8 OD	43
18	1-833-010003	TUBING NYLON 1/2 OD	15
19	1-861-010032-11	WASHER, FLAT 3/8 W ZP/CD	24
20	103738	HOSE ASM AIR 3/8X100,W/3/8 END	2
21	108801	GLAD HAND-RED-AIR	1
22	108802	GLAD HAND-BLUE-AIR	1
23	114586	ABS KIT WABCO 4S/2MTRI/SPREAD **(SEE PAGE 1-106)**	1
24	118-2659-9	BUSHING 1/2NPTX3/4NPT STL	1
25	2081-8-6S	REDUCER 1/2NPT X 3/8NPT	2
26	2083-8-8S	NIPPLE 1/2NPTX1/2NPT	2
27	2088-6-6S	ADAPTER 45 3/8MPTX3/8FPT	2
28	3-780-010002	TANK AIR 9.5X22.5 .5NPT PORTS	3
29	56D4	COCK,DRAIN AIR TANK VEL036019	3
30	758-181	VALVE TASK 4 PORT	1
31	805-2	BUSHINGS, STEP	24

Eastern Wrecker Sales Inc

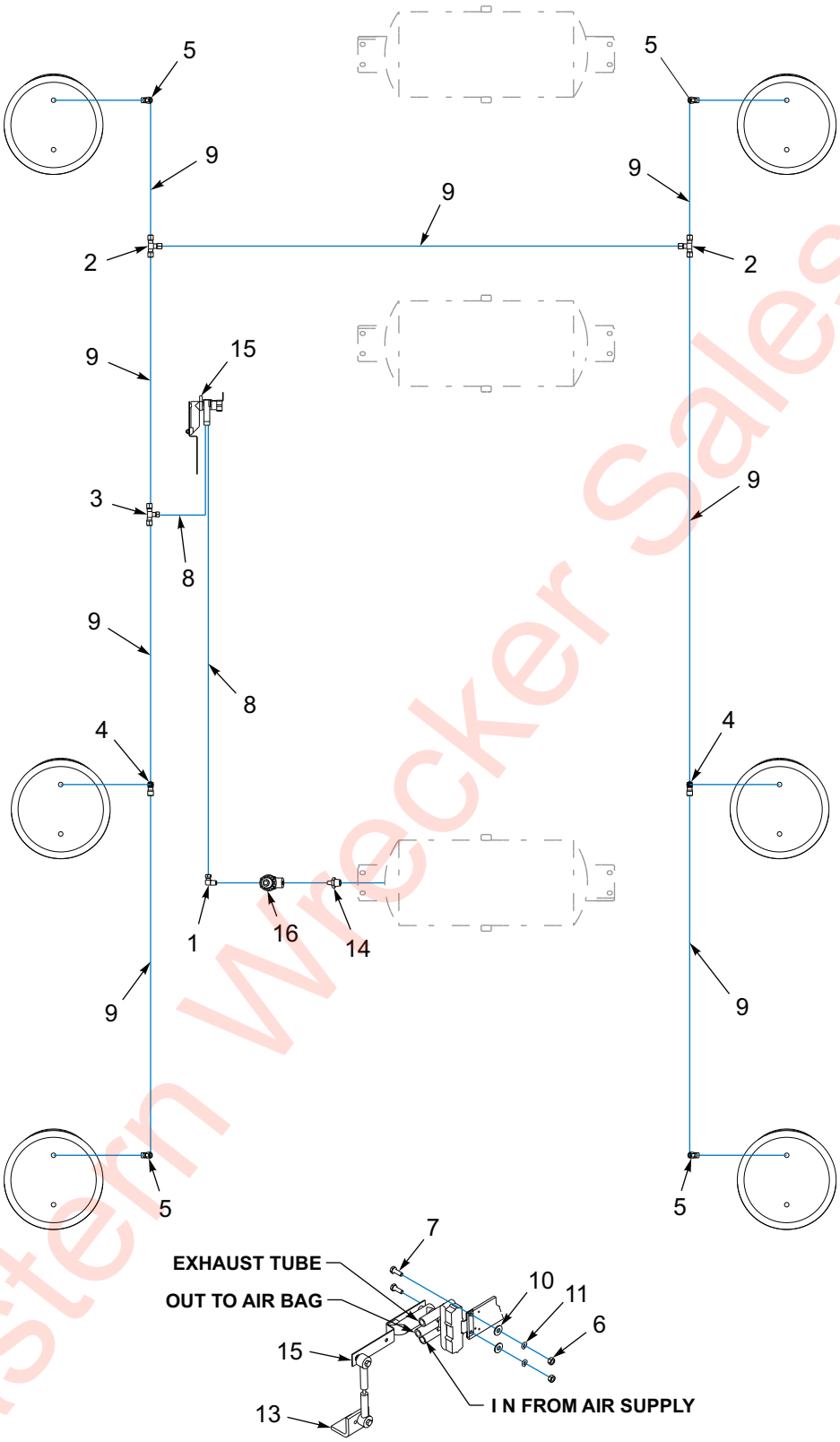

HEIGHT CONTROL VALVE ASSEMBLY

Figure 1-39: Standard Air Ride Suspension - 835E HD Ag Triple

Eastern Wrecker Sales Inc

Standard Air Ride Suspension - 835E HD Ag Triple

ITEM	PART NO.	DESCRIPTION	QTY.
	198549	FRAME ASSY 835EAG-R26 GROTE	
	198550	FRAME ASSY 835EAG-R27 GROTE	
	198552	FRAME ASSY 835EAG-R26-120	
	198553	FRAME ASSY 835EAG-R27-120-54AX	
	198554	FRAME ASSY HD835EAG-R26-120	
	198633	FRAMEASSY835EAG-R27-120-54AXGA	
	198634	FRAME ASSY 835EAG-R26 GRT GALV	
	201063	FRAME ASSY HD 835EAG-R27 GROTE	
	201064	FRAME ASSY HD835EAG-R26-102	
1	1-297-010008-07	FITTING AIR 90 1/4TUBEX1/4NPT	1
2	1-297-010010-03	FITTING,AIR, UNION TEE 3/8	2
3	1-297-010010-04	FITTING,AIR,UN/TEE3/8X3/8X1/4	1
4	1-297-010011-04	FITTING,AIR,M/RUN TEE 3/8-1/4	2
5	1-297-010013-11	FITTING,AIR,45 M/ELB3/8T-1/4P	4
6	1-512-010007-05	NUT, HEX 1/4-20	2
7	1-654-010047-04	SCREW,HEX CAP,1/4-20X3/4 GR5	2
8	1-833-010001	TUBING NYLON 1/4 OD	5
9	1-833-010002	TUBING NYLON 3/8 OD	34
10	1-861-010032-07	WASHER,FLAT 1/4 ZP	2
11	1-861-010034-09	WASHER, LKG HLCL SPR, 1/4	2
12	102732	AIR CONTROL KIT **(ITEMS 13, 15, & 16) (SEE PAGE 1-107)**	1
13	111021	KIT SRK-167 NEWAY 952-50-001	REF
14	2083-8-4S	NIPPLE HEX 1/2PIPE - 1/4PIPE	1
15	900 54 007	HEIGHT CONTROL VALVE	REF
16	905-54-107	BRAKE PROTECTION VALVE	REF

Eastern Wrecker Sales Inc

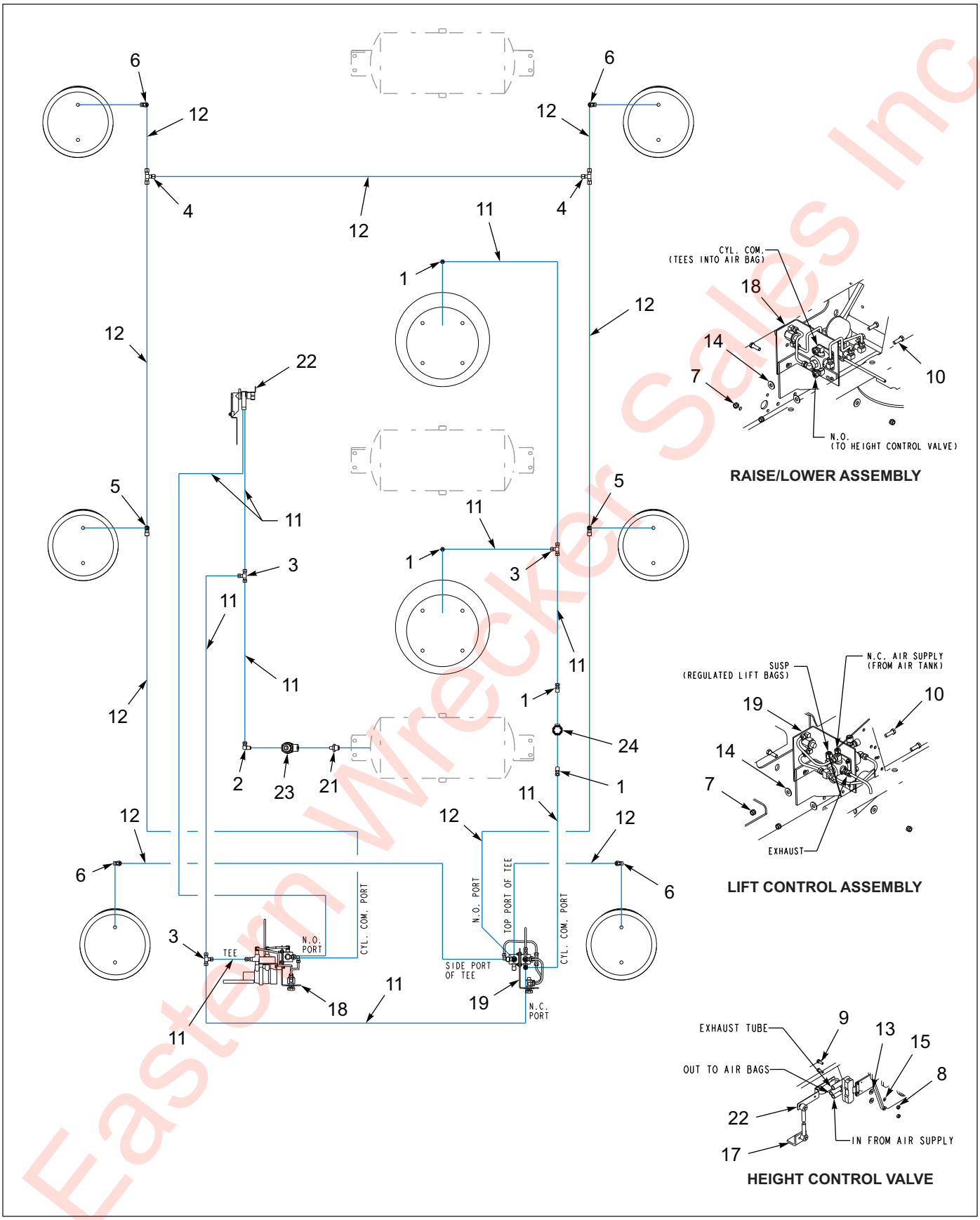

Figure 1-40: Lift Air Ride Suspension - 835E HD Ag Triple

Eastern Wrecker Sales Inc

Lift Air Ride Suspension - 835E HD Ag Triple

ITEM	PART NO.	DESCRIPTION	QTY.
	198551	FRAME ASSY 835EAG-R26 LIFT2&3	
1	1-297-010007-05	FITTING, AIR, 1/4TUBEX1/4NPT	4
2	1-297-010008-07	FITTING AIR 90 1/4TUBEX1/4NPT	1
3	1-297-010010-01	FITTING,AIR,UNION TEE 1/4	3
4	1-297-010010-03	FITTING,AIR, UNION TEE 3/8	2
5	1-297-010011-04	FITTING,AIR,M/RUN TEE 3/8-1/4	2
6	1-297-010013-11	FITTING,AIR,45 M/ELB3/8T-1/4P	4
7	1-512-010005-03	NUT HEX SLFLKG GRB 5/16-18	6
8	1-512-010007-05	NUT, HEX 1/4-20	2
9	1-654-010047-04	SCREW,HEX CAP,1/4-20X3/4 GR5	2
10	1-654-010049-05	SCREW HX CP 5/16-18UNCX1 GR5	6
11	1-833-010001	TUBING NYLON 1/4 OD	40
12	1-833-010002	TUBING NYLON 3/8 OD	57
13	1-861-010032-07	WASHER,FLAT 1/4 ZP	2
14	1-861-010032-09	WASHER, FLAT 5/16 W ZP/CD	6
15	1-861-010034-09	WASHER, LKG HLCL SPR, 1/4	2
16	102732	AIR CONTROL KIT **(ITEMS 17, 22, & 23) (SEE PAGE 1-107)**	1
17	111021	KIT SRK-167 NEWAY 952-50-001	REF
18	112326	CONTROL ASSY AIR R/L **(SEE PAGE 1-109)**	1
19	140369	CONTROL ASSY LIFT AXLE FLIP **(SEE PAGE 1-185)**	1
20	140450	REAR SUSP AIR LIFT ASSY **(NOT SHOWN) (SEE PAGE 1-189)**	1
21	2083-8-4S	NIPPLE HEX 1/2PIPE - 1/4PIPE	1
22	900 54 007	HEIGHT CONTROL VALVE	REF
23	905-54-107	BRAKE PROTECTION VALVE	REF
24	164092	VALVE REGULATOR ASSEMBLY	REF

Eastern Wrecker Sales Inc

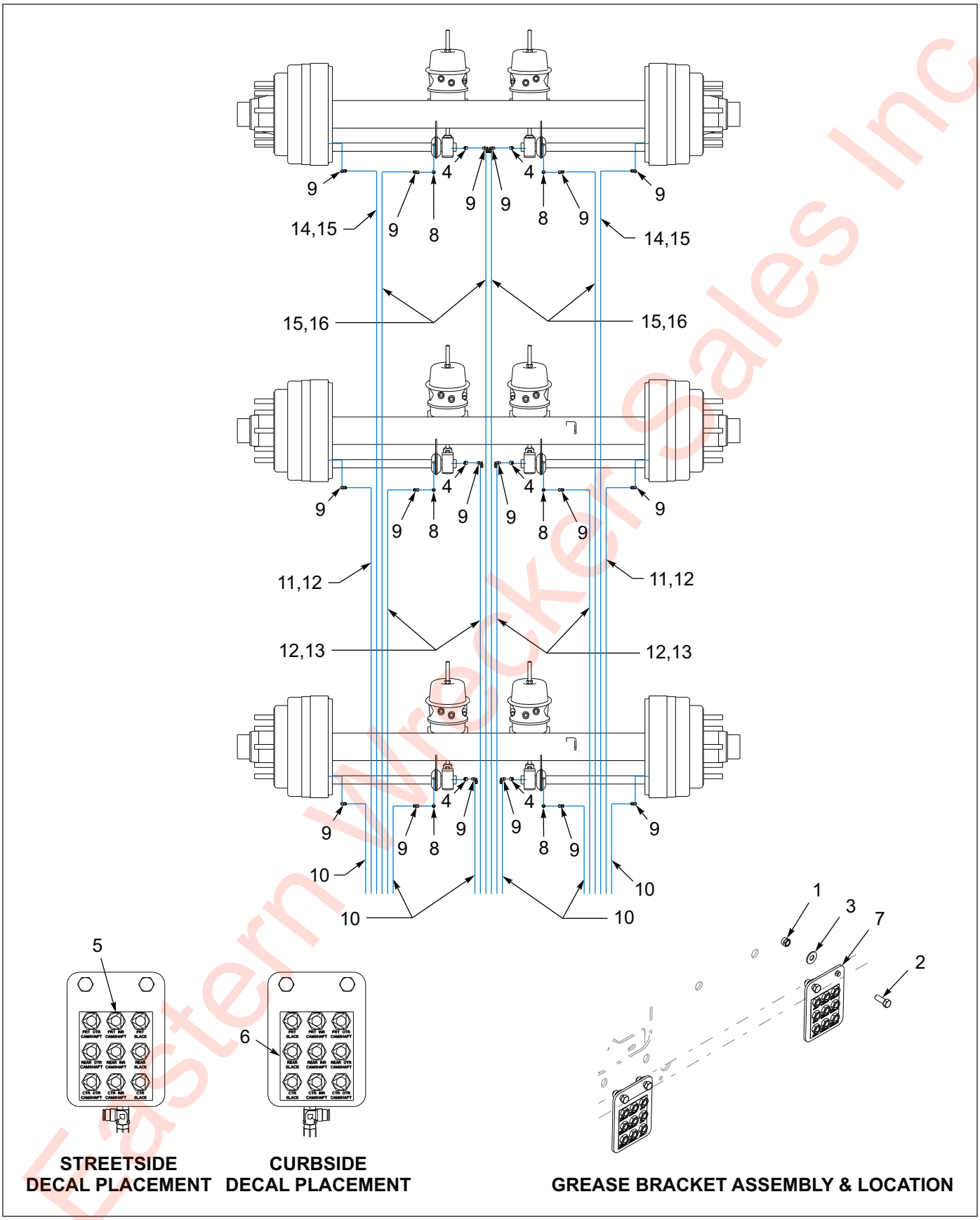

Figure 1-41: Grease Assembly - 835E HD Ag Triple

Eastern Wrecker Sales Inc

Grease Assembly - 835E HD Ag Triple

ITEM	PART NO.	DESCRIPTION	QTY.	
	198549	FRAME ASSY 835EAG-R26 GROTE	*	
	198551	FRAME ASSY 835EAG-R26 LIFT2&3	*	
	198552	FRAME ASSY 835EAG-R26-120	*	
	198554	FRAME ASSY HD835EAG-R26-120	*	
	198634	FRAME ASSY 835EAG-R26 GRT GALV	*	
	201064	FRAME ASSY HD835EAG-R26-102	*	
	198550	FRAME ASSY 835EAG-R27 GROTE		*
	198553	FRAME ASSY 835EAG-R27-120-54AX		*
	198633	FRAMEASSY835EAG-R27-120-54AXGA		*
	201063	FRAME ASSY HD 835EAG-R27 GROTE		*
1	1-512-010005-05	NUT, HEX, SLFLKG GRB 3/8-16	4	4
2	1-654-010051-05	SCREW,HEX CAP 3/8-16UNCX1 GR5	4	4
3	1-861-010032-11	WASHER, FLAT 3/8 W ZP/CD	4	4
4	101528	ELBOW,BRASS PIPE STREET	6	6
5	142545	NUT 7/16 FOR BULKHEAD	18	18
6	142553	DECAL, GREASE TRL U/C	2	2
7	146922	BRACKET BULKHEAD GREASE LINE	2	2
8	202094	ADAPTER 5/16--18X1/8NPT, F	6	6
9	202099	FITTING GREASE 90 SWIV PTC 1/8	18	18
10	202102	HOSE ASSY GREASE 1/8 X 36	6	6
11	202111	HOSE ASSY GREASE 1/8 X 102	--	2
12	202112	HOSE ASSY GREASE 1/8 X 118	2	4
13	202113	HOSE ASSY GREASE 1/8 X 126	4	--
14	202118	HOSE ASSY GREASE 1/8 X 156	--	2
15	202121	HOSE ASSY GREASE 1/8 X 172	2	4
16	202123	HOSE ASSY GREASE 1/8 X 186	4	--

Eastern Wrecker Sales Inc

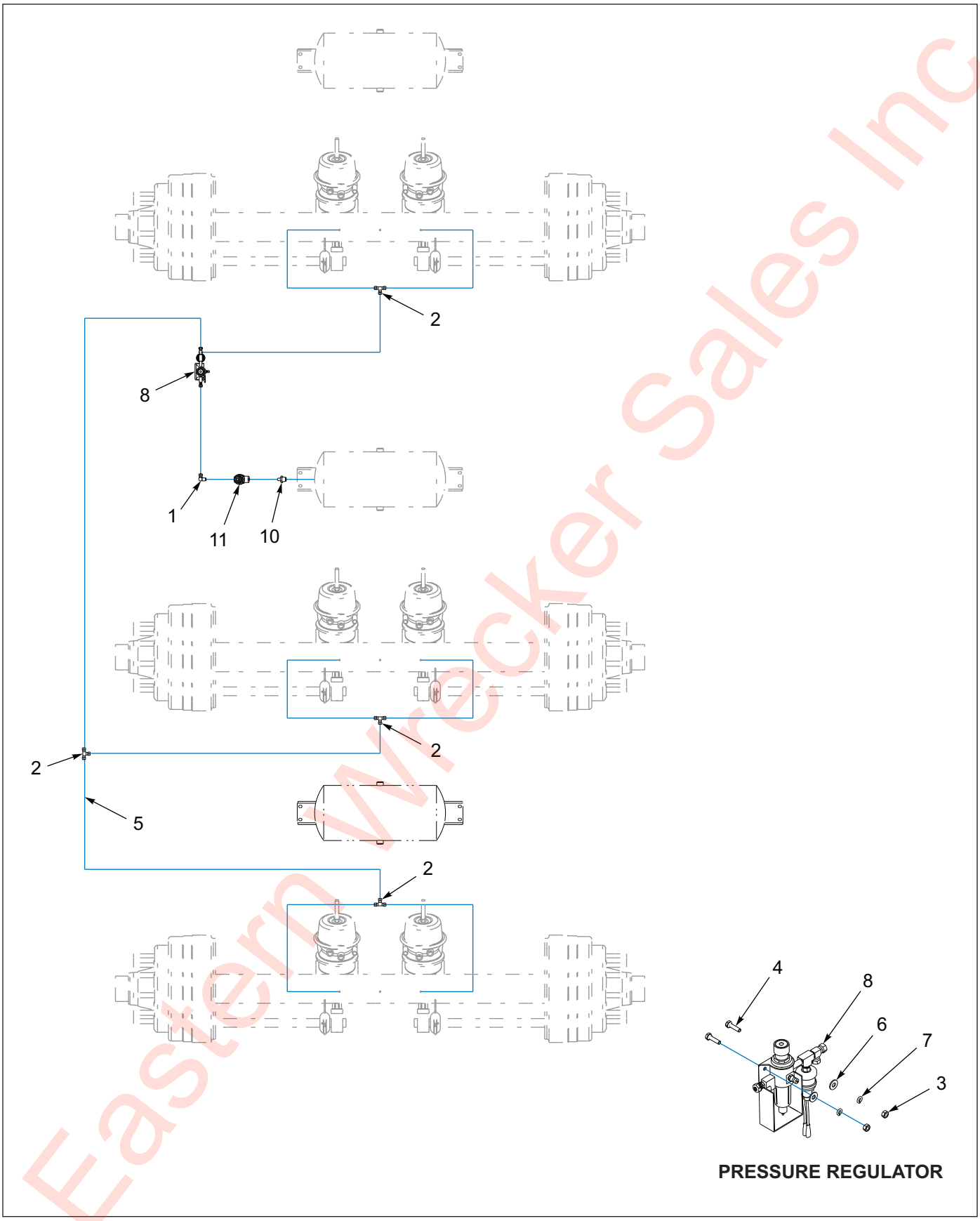

Figure 1-42: Tire Inflation System - 835E HD Ag Triple

Eastern Wrecker Sales Inc

Tire Inflation System - 835E HD Ag Triple

ITEM	PART NO.	DESCRIPTION	QTY.
	198549	FRAME ASSY 835EAG-R26 GROTE	
	198550	FRAME ASSY 835EAG-R27 GROTE	
	198551	FRAME ASSY 835EAG-R26 LIFT2&3	
	198552	FRAME ASSY 835EAG-R26-120	
	198554	FRAME ASSY HD835EAG-R26-120	
	198553	FRAME ASSY 835EAG-R27-120-54AX	
	198633	FRAMEASSY835EAG-R27-120-54AXGA	
	198634	FRAME ASSY 835EAG-R26 GRT GALV	
	201063	FRAME ASSY HD 835EAG-R27 GROTE	
	201064	FRAME ASSY HD835EAG-R26-102	
1	1-297-010008-07	FITTING AIR 90 1/4TUBEX1/4NPT	REF
2	1-297-010010-01	FITTING,AIR,UNION TEE 1/4	REF
3	1-512-010007-05	NUT, HEX 1/4-20	REF
4	1-654-010047-06	SCREW,HX CP 1/4-20UNCX1 GR5	REF
5	1-833-010001	TUBING NYLON 1/4 OD	REF
6	1-861-010032-07	WASHER,FLAT 1/4 ZP	REF
7	1-861-010034-09	WASHER, LKG HLCL SPR, 1/4	REF
8	157703	TIRE INFLATION SYSTEM 3AX **(SEE PAGE 1-225)**	REF
9	176474	HARNESS KIT TIRE INFL 800 **(NOT SHOWN)**	REF
10	2083-8-4S	NIPPLE HEX 1/2PIPE - 1/4PIPE	REF
11	905-54-107	BRAKE PROTECTION VALVE	REF

Eastern Wrecker Sales Inc

Frame Assemblies - 835E Construction

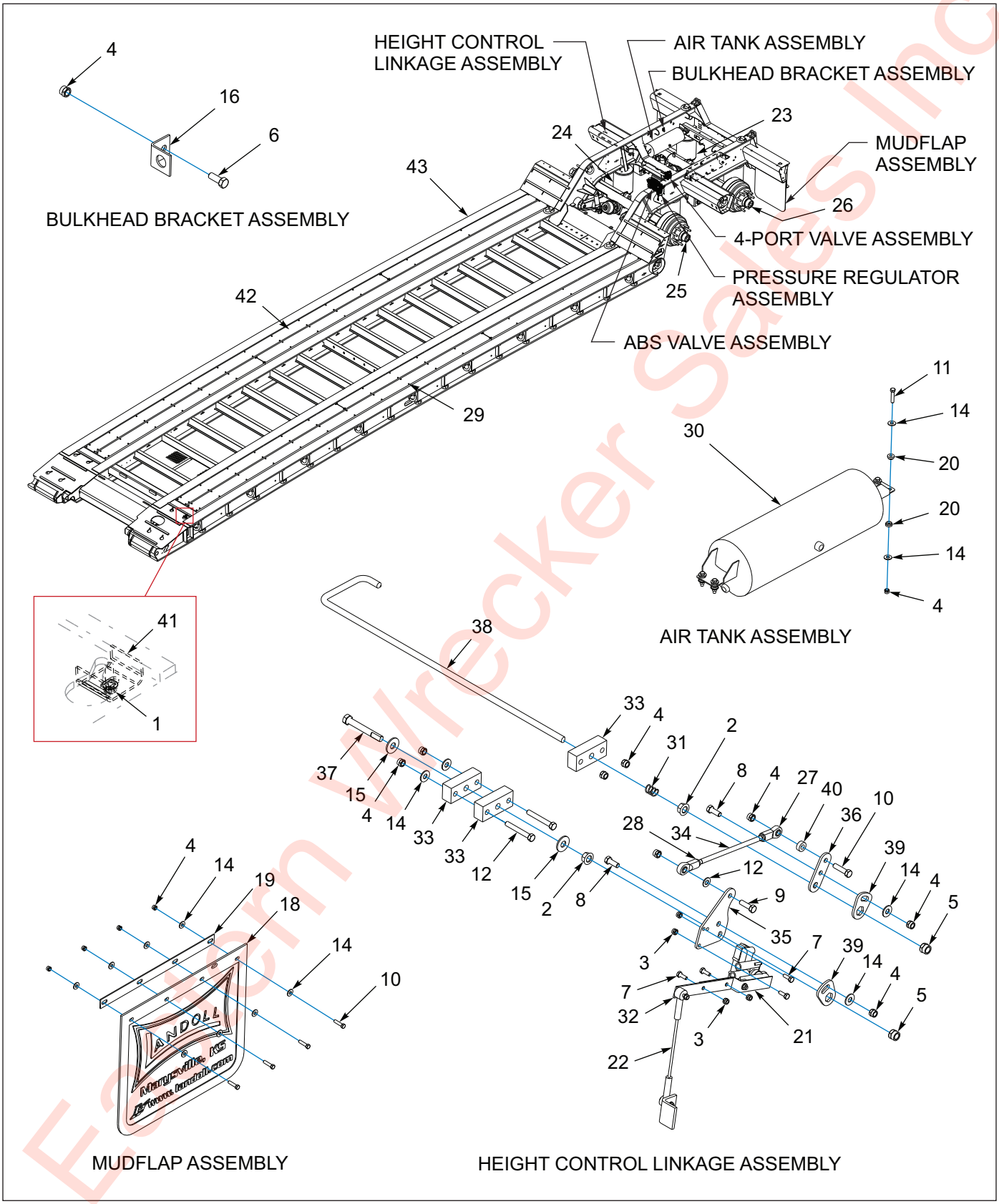

Figure 1-43: General Assembly - 835E Construction

Eastern Wrecker Sales Inc

General Assembly - 835E Construction

ITEM	PART NO.	DESCRIPTION	QTY.
	198699	FRAME ASSY 835E-23-CON	
	198700	FRAME ASSY 835E-27-CON	
	198701	FRAME ASSY 835E-30-CON	
	198702	FRAME ASSY 835E-32-CON	
	198703	FRAME ASSY 835E-30 PAV (53')	
	198704	FRAME ASSY 835E-25 PAV (48')	
	203725	FR ASSY 835E-32-CON GALV	
	208330	GALV OF 198688 FRAME WLDMT 835	
1	1-510-010001	NUT, 3/8-16 UNC FLANGE LOCK	1
2	1-510-010003-09	NUT,1/2-13 FLANGE HD,SERRATED	2
3	1-512-010005-01	NUT,HEX,SLFLKG GRB 1/4-20	4
4	1-512-010005-05	NUT, HEX, SLFLKG GRB 3/8-16	25
5	1-512-010005-09	NUT,HEX,SLFLKG, 1/2-13 GRB	2
6	1-654-010036-05	SCREW,HX CP 3/8-16UNCX1 GR8	1
7	1-654-010047-04	SCREW,HEX CAP,1/4-20X3/4 GR5	4
8	1-654-010051-05	SCREW,HEX CAP 3/8-16UNCX1 GR5	2
9	1-654-010051-06	SCREW,HEX CAP 3/8-16UNCX1-1/4	1
10	1-654-010051-07	SCREW,HEX CAP,3/8-16UNCX1-1/2	9
11	1-654-010051-08	SCREW,HEX CAP,3/8-16X1-3/4 G	8
12	1-654-010051-12	SCREW,HEX CAP,3/8-16UNCX2-3/4	2
13	1-861-010032-10	WASHER, FLAT 3/8" N ZP/CD	1
14	1-861-010032-11	WASHER, FLAT 3/8 W ZP/CD	36
15	1-861-010032-15	WASHER, FLAT 1/2 W ZP/CD	2
16	3-120-010445	BRACKET,PRESSURE REGULATOR660	1
17	3-201-010002	CONDUIT 3/8 PLASTIC FLEX **(NOT SHOWN)**	8
18	3-485-010001	FLAP, MUD 21 IN	2
19	3-762-010017	CLAMP MUD FLAP	2
20	805-2	BUSHINGS, STEP	16
21	900 54 007	HEIGHT CONTROL VALVE N	REF
22	111021	KIT SRK-167 NEWAY 952-50-001	REF
23	110618	SUSPENSION,FASTNR,RLU 250-9-4 **(SEE PAGE 1-113)**	REF
24	110622	SUSPENSION,FASTNR,RLU 250FMT **(SEE PAGE 1-111)**	REF
25	115752	AXLE WLDMT 2516 SPG 79 327FRT	REF
26	115756	AXLE WLDMT 2516 SPG 79 327CTR	REF
27	123717	ROD END, BALL JOINT 3/8	2
28	123869	NUT HX JAM 3/8-24UNF GR2	2
29	158732	SCREW,5/16X2-1/4ZP TORX FLOOR	AR
30	167853	TANK, AIR 8X32 .5NPT PORTS	REF
31	174718	REEL CYL KIT 7431-33 8 ARM	1
32	185001	BRACKET, HEIGHT CTRL VALVE EXT	1
33	194415	PIVOT BLOCK NYLATRON HC	3
34	194416	ROD, HEIGHT CONTROL 835	1
35	194417	LINK VALVE HT CTRL 855	1
36	194418	LINK ROD HT CTRL 855	1
37	194419	SCREW PIVOT HEIGHT CONTROL	1
38	194425	ROD HEIGHT CTRL 835	1
39	194426	ANTI-ROTATION WASHER 3/8	2
40	194427	SPACER WASHER HC	1
41	2-181-010001	HOSE CLAMP	1

Eastern Wicker Sales Inc

General Assembly - 835E Construction

ITEM	PART NO.	DESCRIPTION	QTY.
42	RWD34999	APITONG, 1-1/2 X 7-3/4 NET	AR
43	-----	835E FRAME CONSTRUCTION	REF

Eastern Wrecker Sales Inc

Table provided for general use.

NOTES:

Eastern Wrecker Sales Inc

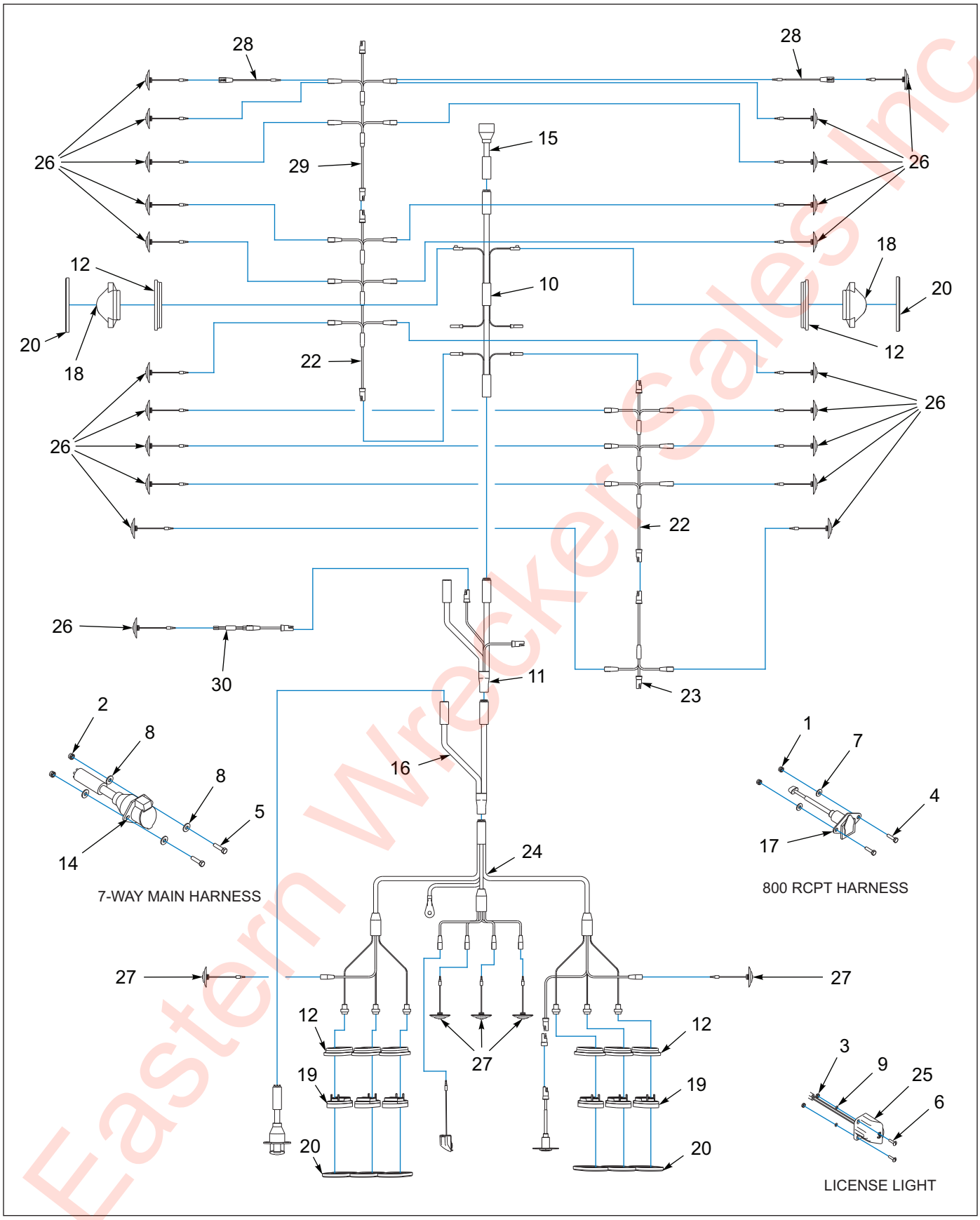

Figure 1-44: Electrical System - 835E Construction

Eastern Wrecker Sales Inc

Electrical System - 835E Construction

ITEM	PART NO.	DESCRIPTION	QTY.			
	198699	FRAME ASSY 835E-23-CON	*			
	198703	FRAME ASSY 835E-30 PAV 53'	*			
	198700	FRAME ASSY 835E-27-CON		*		
	198702	FRAME ASSY 835E-32-CON		*		
	203725	FR ASSY 835E-32-CON GALV		*		
	198701	FRAME ASSY 835E-30-CON			*	
	208330	GALV OF 198688 FRAME WLDMT 835			*	
	198704	FRAME ASSY 835E-25 PAV 48'				*
1	1-512-010005-01	NUT,HEX,SLFLKG GRB 1/4-20	2	2	2	2
2	1-512-010005-03	NUT HEX SLFLKG GRB 5/16-18	2	2	2	2
3	1-512-010007-03	NUT, HEX 10-24	2	2	2	2
4	1-654-010047-06	SCREW,HX CP 1/4-20UNCX1 GR5	2	2	2	2
5	1-654-010049-06	SCREW,H/CAP,5/16-18UNCX1-1/4	2	2	2	2
6	1-656-010003051	SCREW,RH HD MACH 10-24X3/4	2	2	2	2
7	1-861-010032-07	WASHER,FLAT 1/4 ZP	2	2	2	2
8	1-861-010032-09	WASHER, FLAT 5/16 W ZP/CD	4	4	4	4
9	1-861-010034-07	WASHER,LKG,HLCL SPR, NO 10	2	2	2	2
10	143102	HARNESS BED MAIN GROTE	1	1	1	1
11	143103	HARNESS ECHAIN GROTE	1	1	1	1
12	143114	GROMMET OVAL GROTE **(BEFORE 01/02/20)**	8	8	8	8
13	143123	GREASE DIELECTRIC 4 OZ TUBE **(NOT SHOWN)**	25	25	25	25
14	146897	HARNESS 7WAY RECP REAR GROTE	1	1	1	1
15	146898	HARNESS 7WAY PLUG G/N GROTE	1	1	1	1
16	146929	HARNESS Y SPLITTER GROTE	1	1	1	1
17	150116	HARNESS ASSY RCPT 800	1	1	1	1
18	169410	LIGHT YEL MID TURN GROTE	2	2	2	2
19	179902	LIGHT S/T/T RED CLEAR LENS GRT **(BEFORE 01/02/20)**	6	6	6	6
19	213295	LIGHT S/T/T RED CLEAR LENS GRT **(AFTER 01/02/20)**	6	6	6	6
20	180570	COVER CHROME OBLONG GROMMET **(BEFORE 01/02/20)**	8	8	8	8
20	213296	COVER CHROME OBLONG GROMMET **(AFTER 01/02/20)**	8	8	8	8
21	187833	CLIP HARNESS, CROSS-MEMBER **(NOT SHOWN)**	112	126	140	98
22	187856	HARNESS MARKER MID DECK	2	2	2	2
23	187857	HARNESS MARKER ADDITION	2	1	1	1
24	187859	HARNESS BUMPER MICRONOVA GROTE	1	1	1	1
25	187860	LIGHT ASSY LICENSE LED GROTE	1	1	1	1
26	187863	LIGHT YEL LED.75CL/MK CLEAR CB	17	19	21	15
27	187864	LIGHT RED LED.75CL/MK CLEAR CB **(BEFORE 01/02/20)**	5	5	5	5
27	213298	LIGHT RED LED.75CL/MK CLEAR CB **(AFTER 01/02/20)**	5	5	5	5
28	191568	HARNESS MARKER LAMP MICRONOVA	2	2	2	2
29	194411	HARNESS MARKER FRAME REAR	--	1	1	--
30	200037	HARNESS ABS LIGHT SHORT	1	1	1	1
31	43029	HOSE WRAP AEROQUIP 1/4 **(NOT SHOWN)**	3	3	3	3

Eastern Wrecker Sales Inc

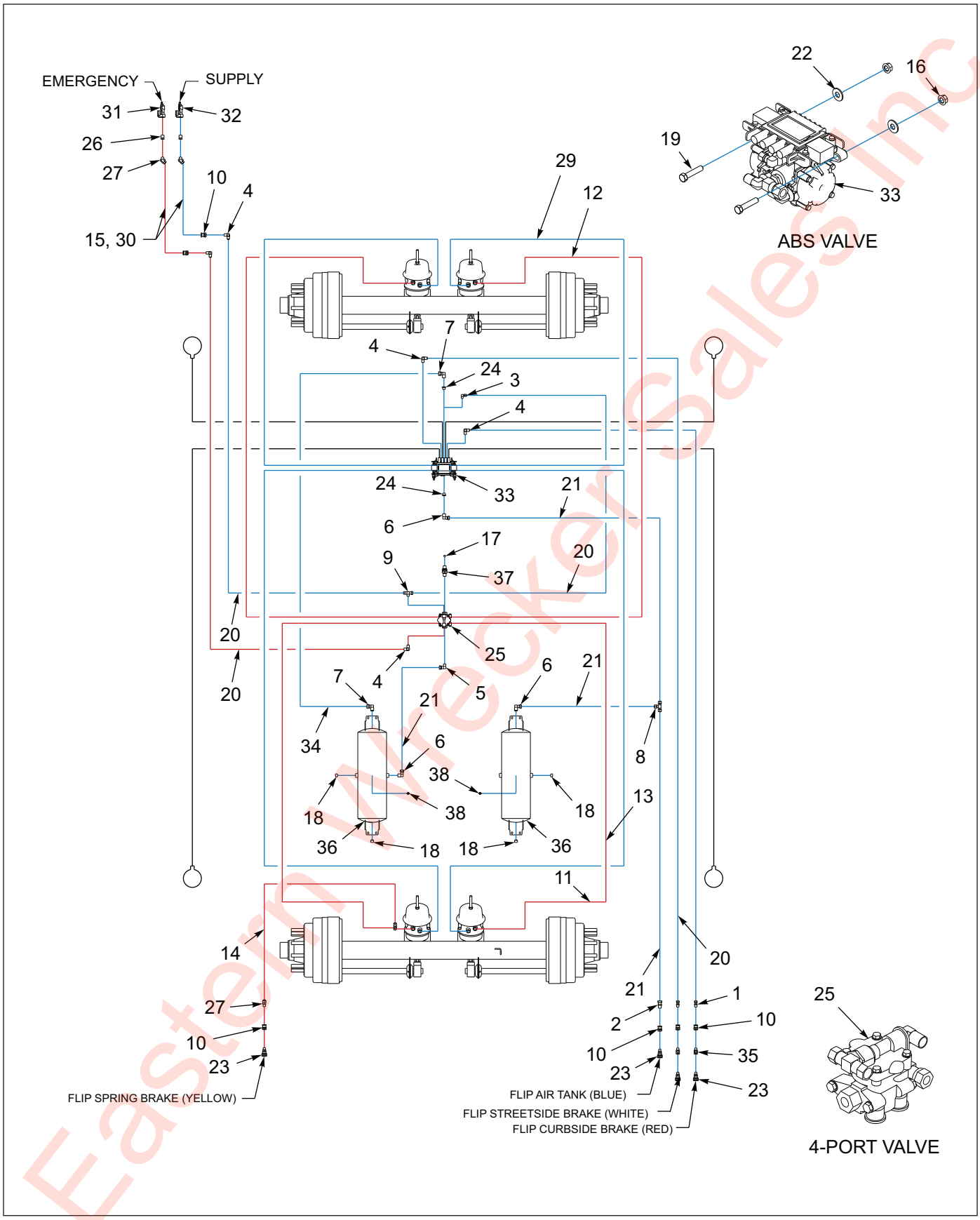

Figure 1-45: Air Brake System - 835E Construction

Eastern Wrecker Sales Inc

Air Brake System - 835E Construction

ITEM	PART NO.	DESCRIPTION	QTY.	
	198699	FRAME ASSY 835E-23-CON	*	
	198700	FRAME ASSY 835E-27-CON	*	
	198701	FRAME ASSY 835E-30-CON	*	
	198702	FRAME ASSY 835E-32-CON	*	
	203725	FR ASSY 835E-32-CON GALV	*	
	208330	GALV OF 198688 FRAME WLDMT 835	*	
	198703	FRAME ASSY 835E-30 PAV 53'		*
	198704	FRAME ASSY 835E-25 PAV 48'		*
1	1-297-010007-12	FITTING AIR 3/8TUBE X 3/8NPT	2	2
2	1-297-010007-15	FITTING AIR 1/2 TUBE X 3/8NPT	1	1
3	1-297-010008-18	FITTING,AIR 90 3/8TUBEX1/4NPT	1	1
4	1-297-010008-20	FITTING,AIR 90 3/8TUBEX3/8NPT	5	5
5	1-297-010008-23	FITTING,AIR 90 1/2TUBEX3/8NPT	1	1
6	1-297-010008-24	FITTING,AIR 90 1/2TUBEX1/2NPT	3	3
7	1-297-010008-26	FITTING AIR 5/8TUBE X1/2NPT90	2	2
8	1-297-010010-06	FITTING,AIR UNION TEE 1/2	1	1
9	1-297-010015-07	FITTING,AIR,BR TEE 3/8T-3/8P	1	1
10	1-297-010022-03	FITTING,AIR ANCHR CPLG, 3/8NPT	6	6
11	1-384-010038024	HOSE ASM AIR 3/8X24,W/3/8 END	2	2
12	1-384-010038030	HOSE ASM AIR 3/8X30,W/3/8 END	2	2
13	1-384-010038038	HOSE ASM AIR 3/8X38,W/3/8 END	2	2
14	1-384-010038054	HOSE ASM AIR 3/8X54,W/3/8 END	1	1
15	1-384-010038084	HOSE ASM AIR 3/8X84,W/3/8 END	2	--
16	1-510-010001	NUT, 3/8-16 UNC FLANGE LOCK	2	2
17	1-560-010002-02	PLUG, PIPE, 1/4NPT	1	1
18	1-560-010002-04	PLUG, PIPE, 1/2NPT	4	4
19	1-654-010051-08	SCREW,HEX CAP,3/8-16X1-3/4 G	2	2
20	1-833-010002	TUBING NYLON 3/8 OD	AR	AR
21	1-833-010003	TUBING NYLON 1/2 OD	10	10
22	1-861-010032-11	WASHER, FLAT 3/8 W ZP/CD	2	2
23	3-220-010004	COUPLER AIR FEMALE 3/8-18MPT	4	4
24	118-2659-9	BUSHING 1/2NPTX3/4NPT STL	2	2
25	758-181	VALVE TASK 4 PORT	1	1
26	2081-8-6S	REDUCER 1/2NPT X 3/8NPT	2	2
27	2088-6-6S	ADAPTER 45 3/8MPTX3/8FPT	3	3
28	2092-6-6S	TEE,#6NPT,1MALE, 2 FEMALE	1	1
29	101003	HOSE ASM AIR 3/8X48,W/3/8 END	2	2
30	103738	HOSE ASM AIR 3/8X100,W/3/8 END	--	2
31	108801	GLAD HAND-RED-AIR	1	1
32	108802	GLAD HAND-BLUE-AIR	1	1
33	114584	ABS KIT WABCO 4S/2M TAB **(SEE PAGE 1-106)**	1	1
34	117304	TUBING NYLON 5/8	3	3
35	163578	VALVE MINI BALL AIR 3/8NPT	2	2
36	167853	TANK, AIR 8X32 .5NPT PORTS	2	2
37	55B61	FRAME UNION	1	1
38	56D4	COCK,DRAIN AIR TANK VEL036019	2	2

Eastern Wrecker Sales Inc

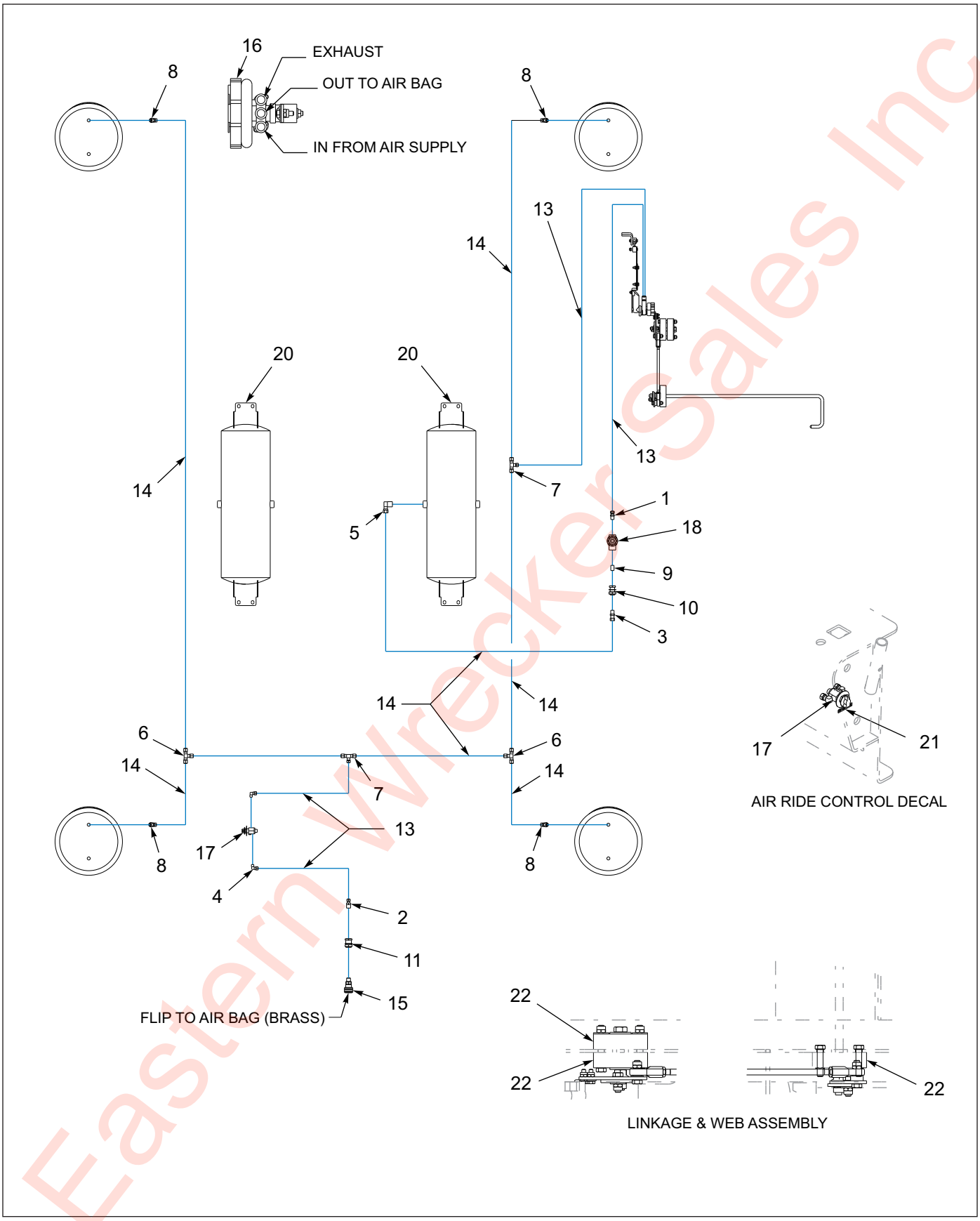

Figure 1-46: Air Ride Suspension - 835E Construction

Eastern Wrecker Sales Inc

Air Ride Suspension - 835E Construction

ITEM	PART NO.	DESCRIPTION	QTY.
	198699	FRAME ASSY 835E-23-CON	
	198700	FRAME ASSY 835E-27-CON	
	198701	FRAME ASSY 835E-30-CON	
	198702	FRAME ASSY 835E-32-CON	
	198703	FRAME ASSY 835E-30 PAV 53'	
	198704	FRAME ASSY 835E-25 PAV(48'	
	203725	FR ASSY 835E-32-CON GALV	
	208330	GALV OF 198688 FRAME WLDMT 835	
1	1-297-010007-05	FITTING, AIR, 1/4TUBEX1/4NPT	1
2	1-297-010007-06	FITTING,AIR,1/4TUBE TO 3/8NPT	1
3	1-297-010007-11	FITTING,AIR,3/8TUBE TO 1/4NPT	1
4	1-297-010008-05	FITTING,AIR 90 1/4TUBEX1/8NPT	2
5	1-297-010008-21	FITTING,AIR 90 3/8TUBEX1/2NPT	1
6	1-297-010010-03	FITTING,AIR, UNION TEE 3/8	2
7	1-297-010010-04	FITTING,AIR,UN/TEE3/8X3/8X1/4	2
8	1-297-010013-11	FITTING,AIR,45 M/ELB3/8T-1/4P	4
9	1-297-010020-02	FITTING,BRS PIPE,CL NIP 1/4	1
10	1-297-010022-02	FITTING,AIR ANCHR CPLG,1/4NPT	1
11	1-297-010022-03	FITTING,AIR ANCHR CPLG, 3/8NPT	1
12	1-796-010004-02	TIE, STRAP,PLASTIC .301X13.38 **(NOT SHOWN)**	30
13	1-833-010001	TUBING NYLON 1/4 OD	13
14	1-833-010002	TUBING NYLON 3/8 OD	15
15	3-220-010004	COUPLER AIR FEMALE 3/8-18MPT	1
16	900 54 007	HEIGHT CONTROL VALVE	REF
17	900-54-088	VALVE, MANUAL OPERATED	1
18	905-54-107	BRAKE PROTECTION VALVE	REF
19	102732	AIR CONTROL KIT **(ITEMS 16 & 17) (SEE PAGE 1-107)**	1
20	167853	TANK, AIR 8X32 .5NPT PORTS	REF
21	168973	DECAL FLIP AXLE AIR BAGS	1
22	194415	PIVOT BLOCK NYLATRON HC	REF

Eastern Wrecker Sales Inc

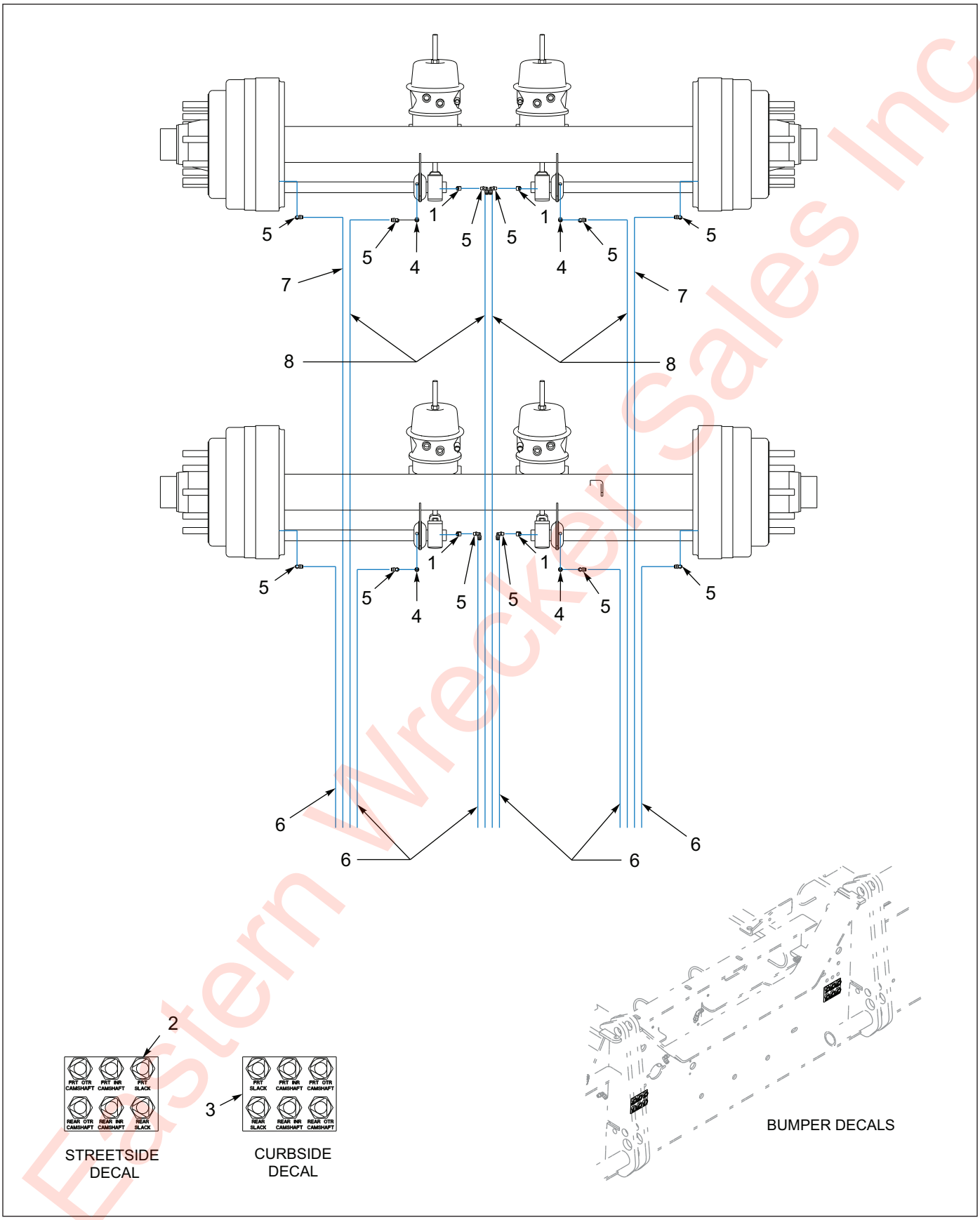

Figure 1-47: Grease Assembly - 835E Construction

Eastern Wrecker Sales Inc

Grease Assembly - 835E Construction

ITEM	PART NO.	DESCRIPTION	QTY.
	198699	FRAME ASSY 835E-23-CON	
	198700	FRAME ASSY 835E-27-CON	
	198701	FRAME ASSY 835E-30-CON	
	198702	FRAME ASSY 835E-32-CON	
	198703	FRAME ASSY 835E-30 PAV 53'	
	198704	FRAME ASSY 835E-25 PAV 48'	
	203725	FR ASSY 835E-32-CON GALV	
	208330	GALV OF 198688 FRAME WLDMT 835	
1	101528	ELBOW,BRASS PIPE STREET	4
2	142545	NUT 7/16 FOR BULKHEAD	12
3	142553	DECAL, GREASE TRL U/C	1
4	202094	ADAPTER 5/16--18X1/8NPT F	4
5	202099	FITTING GREASE 90 SWIV PTC 1/8	12
6	202103	HOSE ASSY GREASE 1/8 X 45	6
7	202111	HOSE ASSY GREASE 1/8 X 102	2
8	202112	HOSE ASSY GREASE 1/8 X 118	4

Eastern Wrecker Sales Inc

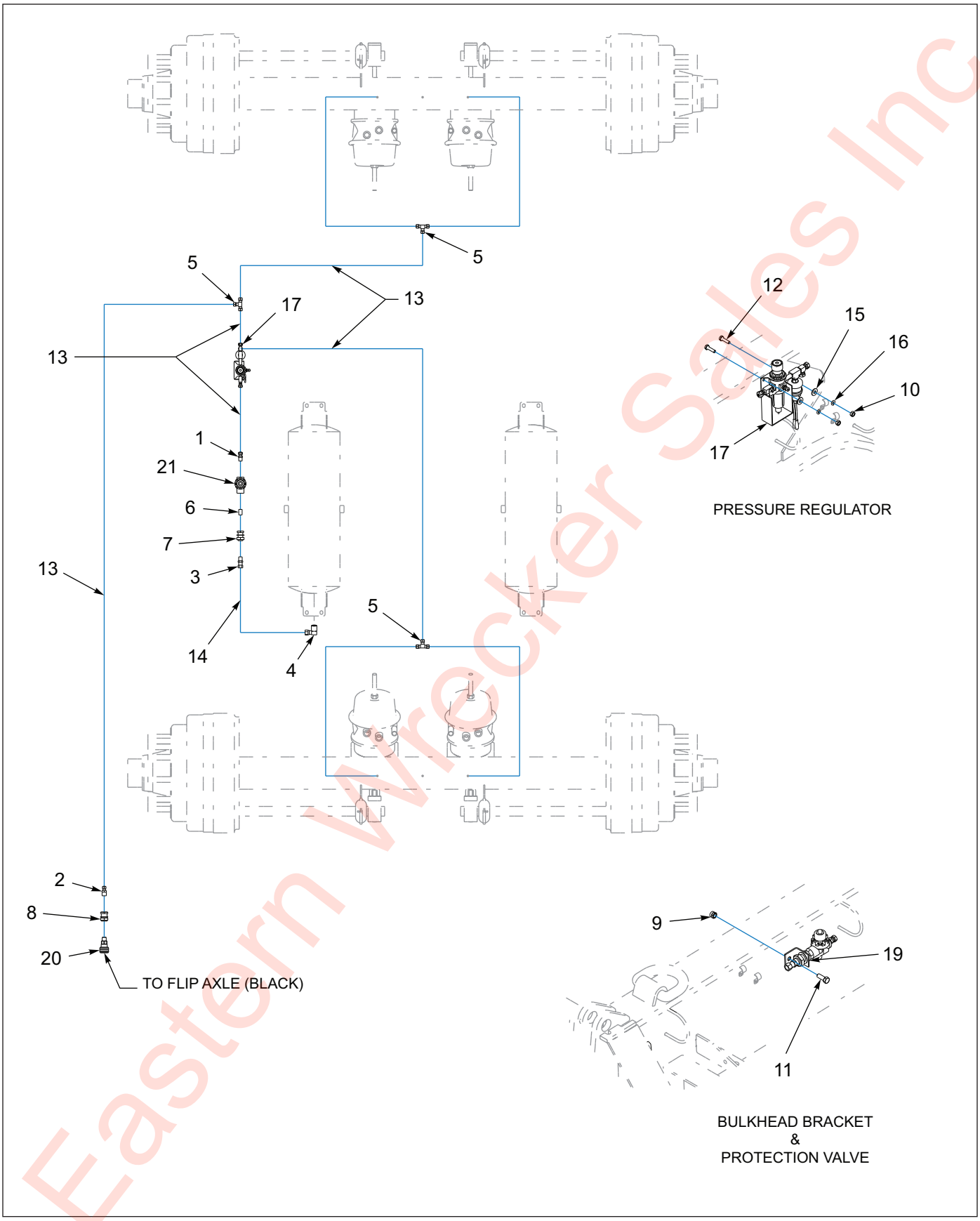

Figure 1-48: Tire Inflation System - 835E Construction

Eastern Wrecker Sales Inc

Tire Inflation System - 835E Construction

ITEM	PART NO.	DESCRIPTION	QTY.
	198699	FRAME ASSY 835E-23-CON	
	198700	FRAME ASSY 835E-27-CON	
	198701	FRAME ASSY 835E-30-CON	
	198702	FRAME ASSY 835E-32-CON	
	198703	FRAME ASSY 835E-30 PAV 53'	
	198704	FRAME ASSY 835E-25 PAV 48'	
	203725	FR ASSY 835E-32-CON GALV	
	208330	GALV OF 198688 FRAME WLDMT 835	
1	1-297-010007-05	FITTING, AIR, 1/4TUBEX1/4NPT	REF
2	1-297-010007-06	FITTING,AIR,1/4TUBE TO 3/8NPT	REF
3	1-297-010007-11	FITTING,AIR,3/8TUBE TO 1/4NPT	REF
4	1-297-010008-21	FITTING,AIR 90 3/8TUBEX1/2NPT	REF
5	1-297-010010-01	FITTING,AIR,UNION TEE 1/4	REF
6	1-297-010020-02	FITTING,BRS PIPE,CL NIP 1/4	REF
7	1-297-010022-02	FITTING,AIR ANCHR CPLG,1/4NPT	REF
8	1-297-010022-03	FITTING,AIR ANCHR CPLG, 3/8NPT	REF
9	1-512-010005-05	NUT, HEX, SLFLKG GRB 3/8-16	REF
10	1-512-010007-05	NUT, HEX 1/4-20	REF
11	1-654-010036-05	SCREW,HX CP 3/8-16UNCX1 GR8	REF
12	1-654-010047-06	SCREW,HX CP 1/4-20UNCX1 GR5	REF
13	1-833-010001	TUBING NYLON 1/4 OD	REF
14	1-833-010002	TUBING NYLON 3/8 OD	REF
15	1-861-010032-07	WASHER,FLAT 1/4 ZP	REF
16	1-861-010034-09	WASHER, LKG HLCL SPR, 1/4	REF
17	157702	TIRE INFLATION SYSTEM 2AX **(SEE PAGE 1-224)**	REF
18	176474	HARNESS KIT TIRE INFL 800 **(NOT SHOWN)**	REF
19	3-120-010445	BRACKET,PRESSURE REGULATOR660	REF
20	3-220-010004	COUPLER AIR FEMALE 3/8-18MPT	REF
21	905-54-107	BRAKE PROTECTION VALVE	REF

Eastern Wacker Sales Inc

Frame Assemblies - 845E HD Ag Tandem

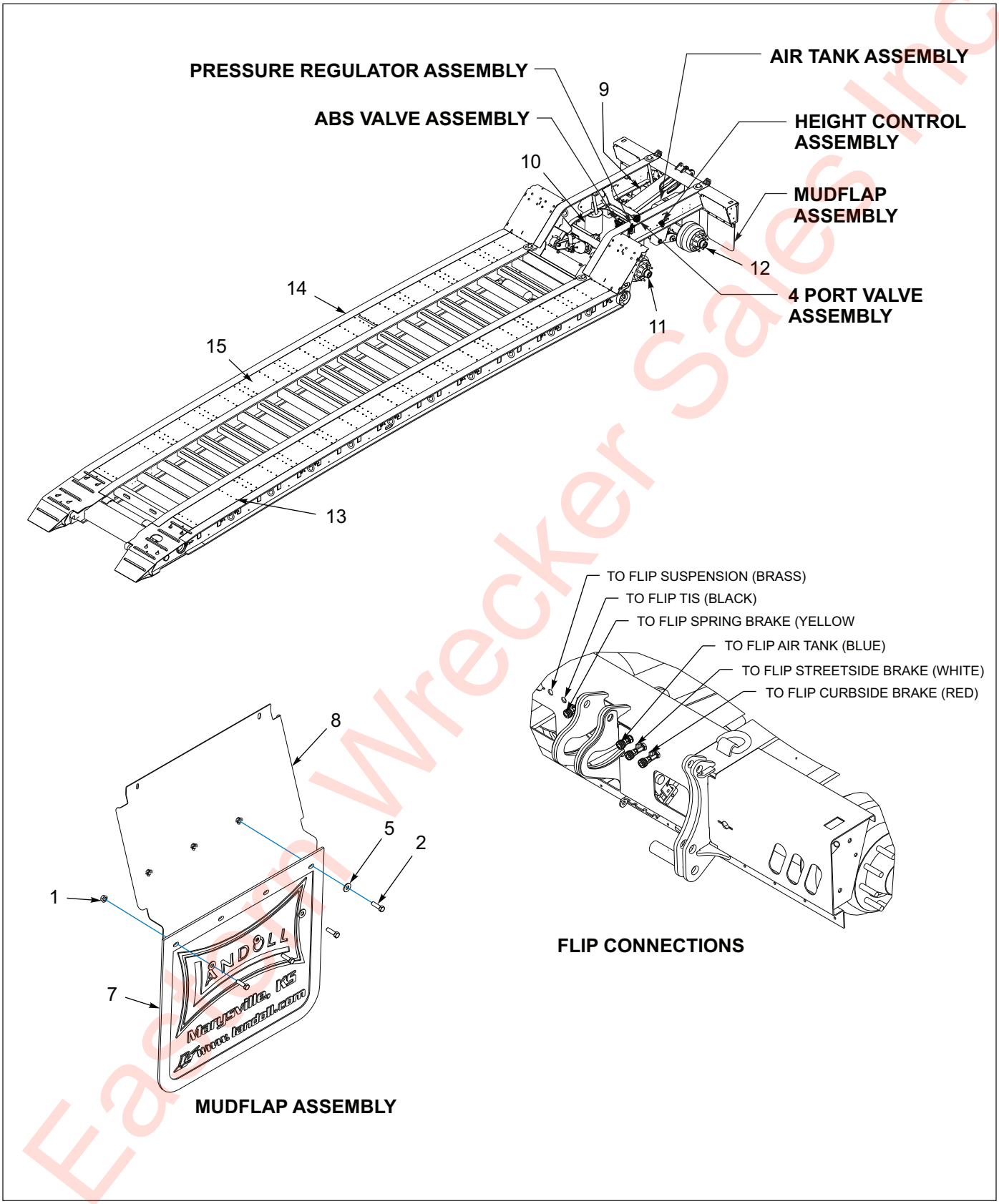

Figure 1-49: General Assembly - 845E HD Ag Tandem

Eastern Wrecker Sales Inc

General Assembly - 845E HD Ag Tandem

ITEM	PART NO.	DESCRIPTION	QTY.			
	208336	FRAME ASSY 845E-27 GROTE	*			
	208335	FRAME ASSY 845E-27 96/102		*		
	197012	FRAME ASSY 845E-32 P/O			*	
	207300	FRAME ASSY HD 845E-32 CPW 108				*
1	1-510-010001	NUT, 3/8-16 UNC FLANGE LOCK	8	8	8	8
2	1-654-010051-06	SCREW,HEX CAP 3/8-16UNCX1-1/4	8	8	8	8
3	1-796-010001	TIE WIRE 22 PLASTIC **(NOT SHOWN)**	5	5	5	5
4	1-796-010004-02	TIE, STRAP,PLASTIC .301X13.38 **(NOT SHOWN)**	50	50	50	50
5	1-861-010032-11	WASHER, FLAT 3/8 W ZP/CD	8	8	8	8
6	3-201-010002	CONDUIT 3/8 PLASTIC FLEX **(NOT SHOWN)**	8	8	8	8
7	3-485-010001	FLAP, MUD 21 IN	2	2	2	2
8	105132	SHIELD TAIL LIGHT	2	2	2	2
9	110618	SUSPENSION,FASTNR,RLU 250-9-4 **(SEE PAGE 1-112)**	REF	REF	REF	REF
10	110622	SUSPENSION,FASTNR,RLU 250FMT **(SEE PAGE 1-110)**	REF	REF	REF	REF
11	115752	AXLE WLDMT 2516 SPG 79 327FRT	REF	REF	REF	REF
12	115756	AXLE WLDMT 2516 SPG 79 327CTR	REF	REF	REF	REF
13	158732	SCREW,5/16X2-1/4ZP TORX FLOOR	205	205	235	235
14	207704	FRAME WLDMT 845HD-27	1	--	--	--
14	207705	FRAME WLDMT 845HD-27 96/102	--	1	--	--
14	197013	FRAME WLDMT 845HD-32	--	--	1	--
14	207301	FRAME WLDMT HD 845E-32 CPW 108	--	--	--	1
15	RWD34999	APITONG, 1-1/2 X 7-3/4 NET	105	105	195	195

Eastern Wrecker Sales Inc

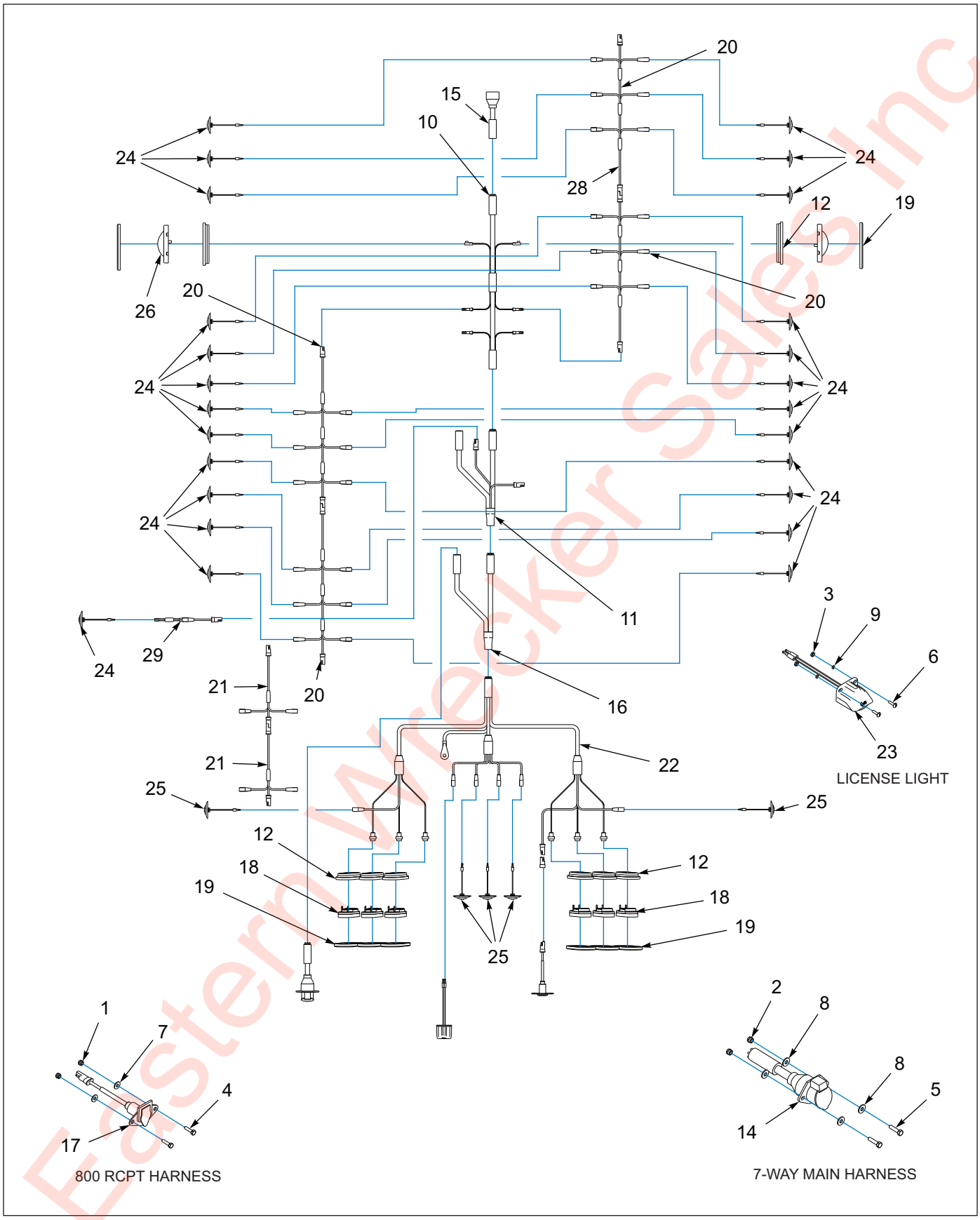

Figure 1-50: Electrical System - 845E HD Ag Tandem

Eastern Wrecker Sales Inc

Electrical System - 845E HD Ag Tandem

ITEM	PART NO.	DESCRIPTION	QTY.	
	208336	FRAME ASSY 845E-27 GROTE	*	
	208335	FRAME ASSY 845E-27 96/102	*	
	197012	FRAME ASSY 845E-32 P/O	*	
	207300	FRAME ASSY HD 845E-32 CPW 108		*
1	1-512-010005-01	NUT,HEX,SLFLKG GRB 1/4-20	2	2
2	1-512-010005-03	NUT HEX SLFLKG GRB 5/16-18	2	2
3	1-512-010007-03	NUT, HEX 10-24	2	2
4	1-654-010047-06	SCREW,HX CP 1/4-20UNCX1 GR5	2	2
5	1-654-010049-06	SCREW,H/CAP,5/16-18UNCX1-1/4	2	2
6	1-656-010003051	SCREW,RH HD MACH 10-24X3/4	2	2
7	1-861-010032-07	WASHER,FLAT 1/4 ZP	2	2
8	1-861-010032-09	WASHER, FLAT 5/16 W ZP/CD	4	4
9	1-861-010034-07	WASHER,LKG,HLCL SPR, NO 10	2	2
10	143102	HARNESS BED MAIN GROTE	1	1
11	143103	HARNESS ECHAIN GROTE	1	1
12	143114	GROMMET OVAL GROTE **(BEFORE 01/02/20)**	8	8
13	143123	GREASE DIELECTRIC 4 OZ TUBE **(NOT SHOWN)**	.50	.50
14	146897	HARNESS 7WAY RECP REAR GROTE	1	1
15	146898	HARNESS 7WAY PLUG G/N GROTE	1	1
16	146929	HARNESS Y SPLITTER GROTE	1	1
17	150116	HARNESS ASSY RCPT 800	1	1
18	179902	LIGHT S/T/T RED CLEAR LENS GRT **(BEFORE 01/02/20)**	6	6
18	213295	LIGHT S/T/T RED CLEAR LENS GRT **(AFTER 01/02/20)**	6	6
19	180570	COVER CHROME OBLONG GROMMET **(BEFORE 01/02/20)**	8	8
19	213296	COVER CHROME OBLONG GROMMET **(AFTER 01/02/20)**	8	8
20	187856	HARNESS MARKER MID DECK	3	2
21	187857	HARNESS MARKER ADDITION	2	1
22	187859	HARNESS BUMPER MICRONOVA GROTE	1	1
23	187860	LIGHT ASSY LICENSE LED GROTE	1	1
24	187863	LIGHT YEL LED.75CL/MK CLEAR CB	21	21
25	187864	LIGHT RED LED.75CL/MK CLEAR CB **(BEFORE 01/02/20)**	5	5
25	213298	LIGHT RED LED.75CL/MK CLEAR CB **(AFTER 01/02/20)**	5	5
26	187868	LIGHT MID-TURN LED CLEAR LENS	2	2
27	191568	HARNESS MARKER LAMP MICRONOVA **(NOT SHOWN)**	--	2
28	194411	HARNESS MARKER FRAME REAR	--	1
29	200037	HARNESS ABS LIGHT SHORT	1	1
30	43029	HOSE WRAP AEROQUIP 1/4 **(NOT SHOWN)**	3	3

Eastern Marker Sales Inc

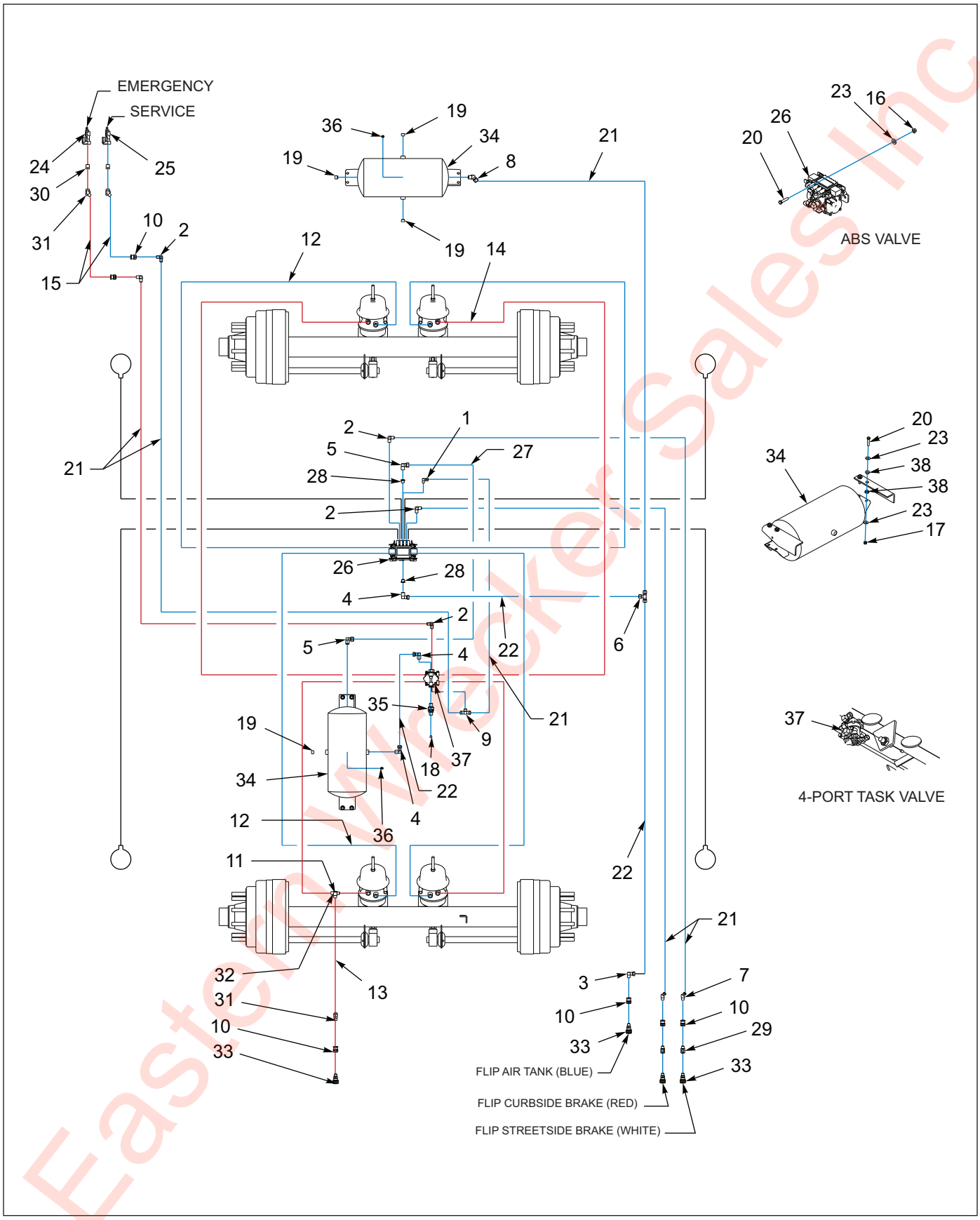

Figure 1-51: Air Brake System - 845E HD Ag Tandem

Eastern Wrecker Sales Inc

Air Brake System - 845E HD Ag Tandem

ITEM	PART NO.	DESCRIPTION	QTY.
	208336	FRAME ASSY 845E-27 GROTE	
	208335	FRAME ASSY 845E-27 96/102	
	197012	FRAME ASSY 845E-32 P/O	
	207300	FRAME ASSY HD 845E-32 CPW 108	
1	1-297-010008-18	FITTING,AIR 90 3/8TUBEX1/4NPT	1
2	1-297-010008-20	FITTING,AIR 90 3/8TUBEX3/8NPT	5
3	1-297-010008-23	FITTING,AIR 90 1/2TUBEX3/8NPT	1
4	1-297-010008-24	FITTING,AIR 90 1/2TUBEX1/2NPT	3
5	1-297-010008-26	FITTING AIR 5/8TUBE X1/2NPT90	2
6	1-297-010010-06	FITTING,AIR UNION TEE 1/2	1
7	1-297-010013-12	FITTING AIR 45 M/ELB3/8TX3/8P	2
8	1-297-010013-16	FITTING,AIR 1/2X1/2 45 M/ELB	1
9	1-297-010015-07	FITTING,AIR,BR TEE 3/8T-3/8P	1
10	1-297-010022-03	FITTING,AIR ANCHR CPLG, 3/8NPT	6
11	1-384-010038024	HOSE ASM AIR 3/8X24,W/3/8 END	2
12	1-384-010038038	HOSE ASM AIR 3/8X38,W/3/8 END	4
13	1-384-010038054	HOSE ASM AIR 3/8X54,W/3/8 END	1
14	1-384-010038060	HOSE ASM AIR 3/8X60,W/3/8 END	2
15	1-384-010038084	HOSE ASM AIR 3/8X84,W/3/8 END	2
16	1-510-010001	NUT, 3/8-16 UNC FLANGE LOCK	2
17	1-512-010005-05	NUT, HEX, SLFLKG GRB 3/8-16	8
18	1-560-010002-02	PLUG, PIPE, 1/4NPT	1
19	1-560-010002-04	PLUG, PIPE, 1/2NPT	4
20	1-654-010051-08	SCREW,HEX CAP,3/8-16X1-3/4 G	10
21	1-833-010002	TUBING NYLON 3/8 OD	68
22	1-833-010003	TUBING NYLON 1/2 OD	8
23	1-861-010032-11	WASHER, FLAT 3/8 W ZP/CD	18
24	108801	GLAD HAND-RED-AIR	1
25	108802	GLAD HAND-BLUE-AIR	1
26	114584	ABS KIT WABCO 4S/2M TAB **(SEE PAGE 1-106)**	1
27	117304	TUBING NYLON 5/8	3
28	118-2659-9	BUSHING 1/2NPTX3/4NPT STL	2
29	163578	VALVE MINI BALL AIR 3/8NPT	2
30	2081-8-6S	REDUCER 1/2NPT X 3/8NPT	2
31	2088-6-6S	ADAPTER 45 3/8MPTX3/8FPT	3
32	2092-6-6S	TEE,#6NPT,1MALE, 2 FEMALE	1
33	3-220-010004	COUPLER AIR FEMALE 3/8-18MPT	4
34	3-780-010002	TANK AIR 9.5X22.5 .5NPT PORTS	2
35	55B61	FRAME UNION	1
36	56D4	COCK,DRAIN AIR TANK VEL036019	2
37	758-181	VALVE TASK 4 PORT	1
38	805-2	BUSHINGS, STEP	16

Eastern Wrecker Sales Inc

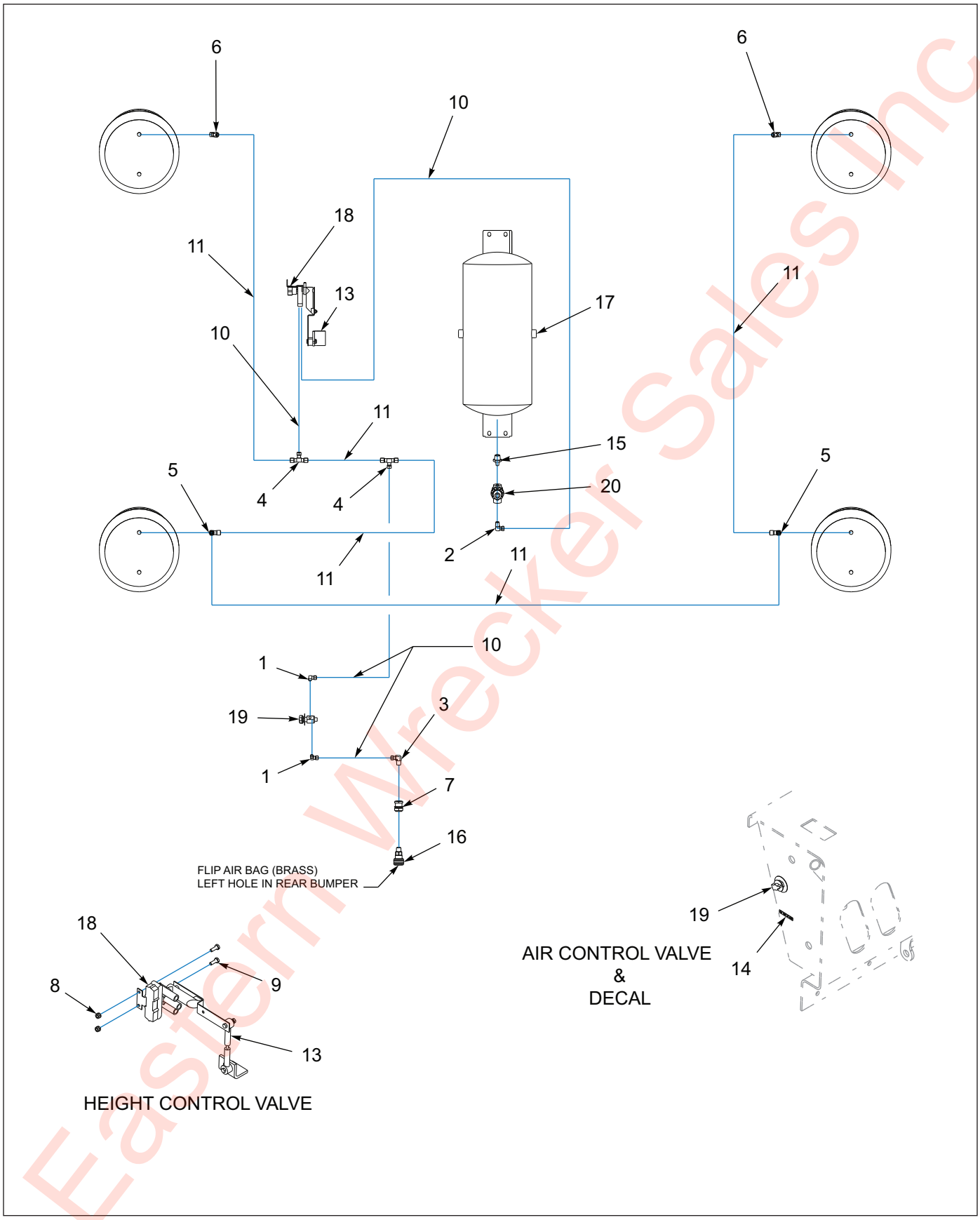

Eastern Wrecker Sales Inc

Figure 1-52: Air Ride Suspension - 845E HD Ag Tandem

Air Ride Suspension - 845E HD Ag Tandem

ITEM	PART NO.	DESCRIPTION	QTY.
	208336	FRAME ASSY 845E-27 GROTE	REF
	208335	FRAME ASSY 845E-27 96/102	
	197012	FRAME ASSY 845E-32 P/O	
	207300	FRAME ASSY HD 845E-32 CPW 108	
1	1-297-010008-05	FITTING,AIR 90 1/4TUBEX1/8NPT	2
2	1-297-010008-07	FITTING AIR 90 1/4TUBEX1/4NPT	1
3	1-297-010008-09	FITTING,AIR 90 1/4TUBEX3/8NPT	1
4	1-297-010010-04	FITTING,AIR,UN/TEE3/8X3/8X1/4	2
5	1-297-010011-04	FITTING,AIR,M/RUN TEE 3/8-1/4	2
6	1-297-010013-11	FITTING,AIR,45 M/ELB3/8T-1/4P	2
7	1-297-010022-03	FITTING,AIR ANCHR CPLG, 3/8NPT	1
8	1-512-010005-01	NUT,HEX,SLFLKG GRB 1/4-20	REF
9	1-654-010047-04	SCREW,HEX CAP,1/4-20X3/4 GR5	REF
10	1-833-010001	TUBING NYLON 1/4 OD	15
11	1-833-010002	TUBING NYLON 3/8 OD	13
12	102732	AIR CONTROL KIT **(ITEMS 13, 18 & 20) (SEE PAGE 1-107)**	1
13	111021	KIT SRK-167 NEWAY 952-50-001	REF
14	168973	DECAL FLIP AXLE AIR BAGS	1
15	2083-8-4S	NIPPLE HEX 1/2PIPE - 1/4PIPE	1
16	3-220-010004	COUPLER AIR FEMALE 3/8-18MPT	1
17	3-780-010002	TANK AIR 9.5X22.5 .5NPT PORTS	REF
18	900 54 007	HEIGHT CONTROL VALVE N	REF
19	900-54-088	VALVE, MANUAL OPERATED	1
20	905-54-107	BRAKE PROTECTION VALVE	REF

Eastern Wrecker Sales Inc

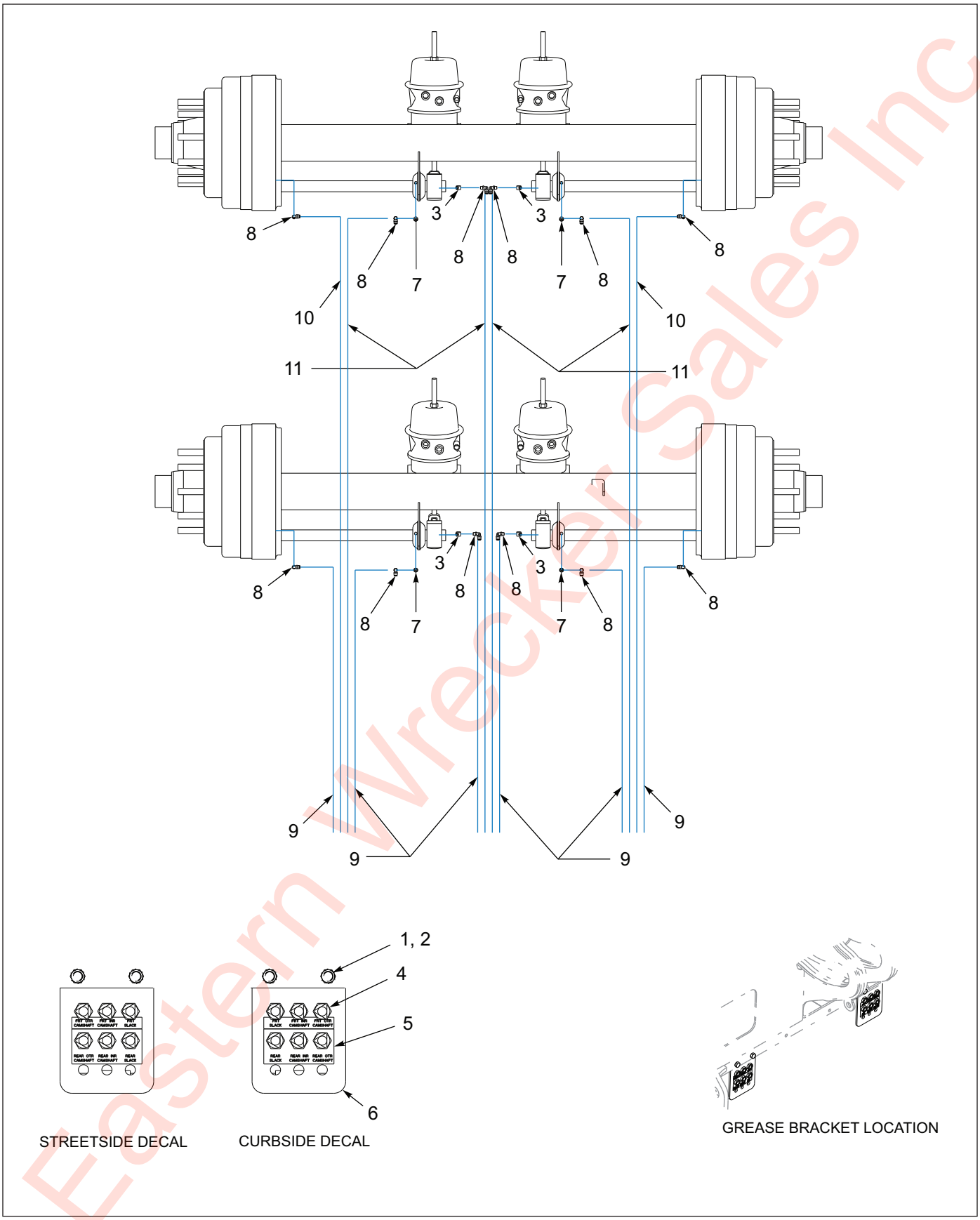

Figure 1-53: Grease Assembly - 845E HD Ag Tandem

Eastern Wrecker Sales Inc

Grease Assembly - 845E HD Ag Tandem

ITEM	PART NO.	DESCRIPTION	QTY.
	208336	FRAME ASSY 845E-27 GROTE	
	208335	FRAME ASSY 845E-27 96/102	
	197012	FRAME ASSY 845E-32 P/O	
	207300	FRAME ASSY HD 845E-32 CPW 108	
1	1-512-010005-05	NUT, HEX, SLFLKG GRB 3/8-16	4
2	1-654-010051-05	SCREW,HEX CAP 3/8-16UNCX1 GR5	4
3	101528	ELBOW,BRASS PIPE STREET	4
4	142545	NUT 7/16 FOR BULKHEAD	12
5	142553	DECAL, GREASE TRL U/C	2
6	146922	BRACKET BULKHEAD GREASE LINE	2
7	202094	ADAPTER 5/16--18X1/8NPT F	4
8	202099	FITTING GREASE 90 SWIV PTC 1/8	12
9	202102	HOSE ASSY GREASE 1/8 X 36	6
10	202111	HOSE ASSY GREASE 1/8 X 102	2
11	202112	HOSE ASSY GREASE 1/8 X 118	4

Eastern Wrecker Sales Inc

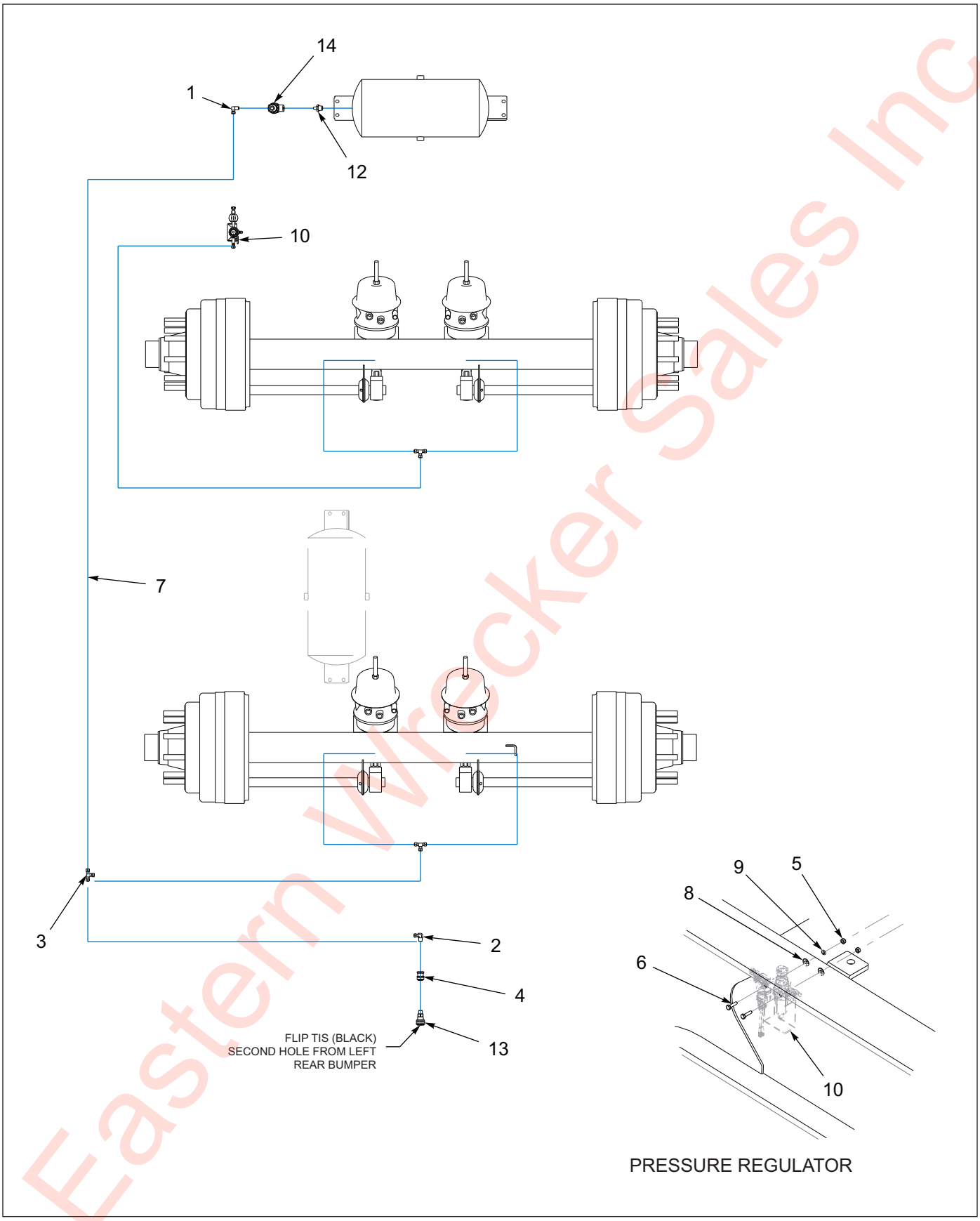

Eastern Wrecker Sales Inc

Figure 1-54: Tire Inflation System - 845E HD Ag Tandem

Tire Inflation System - 845E HD Ag Tandem

ITEM	PART NO.	DESCRIPTION	QTY.
	208336	FRAME ASSY 845E-27 GROTE	
	208335	FRAME ASSY 845E-27 96/102	
	197012	FRAME ASSY 845E-32 P/O	
1	1-297-010008-07	FITTING AIR 90 1/4TUBEX1/4NPT	REF
2	1-297-010008-09	FITTING,AIR 90 1/4TUBEX3/8NPT	REF
3	1-297-010010-01	FITTING,AIR,UNION TEE 1/4	REF
4	1-297-010022-03	FITTING,AIR ANCHR CPLG, 3/8NPT	REF
5	1-512-010007-05	NUT, HEX 1/4-20	REF
6	1-654-010047-06	SCREW,HX CP 1/4-20UNCX1 GR5	REF
7	1-833-010001	TUBING NYLON 1/4 OD	REF
8	1-861-010032-07	WASHER,FLAT 1/4 ZP	REF
9	1-861-010034-09	WASHER, LKG HLCL SPR, 1/4	REF
10	157702	TIRE INFLATION SYSTEM 2AX **(SEE PAGE 1-224)**	REF
11	176474	HARNESS KIT TIRE INFL 800 **(NOT SHOWN)**	REF
12	2083-8-4S	NIPPLE HEX 1/2PIPE - 1/4PIPE	REF
13	3-220-010004	COUPLER AIR FEMALE 3/8-18MPT	REF
14	905-54-107	BRAKE PROTECTION VALVE	REF

Eastern Wrecker Sales Inc

Brake & Air Control Kits

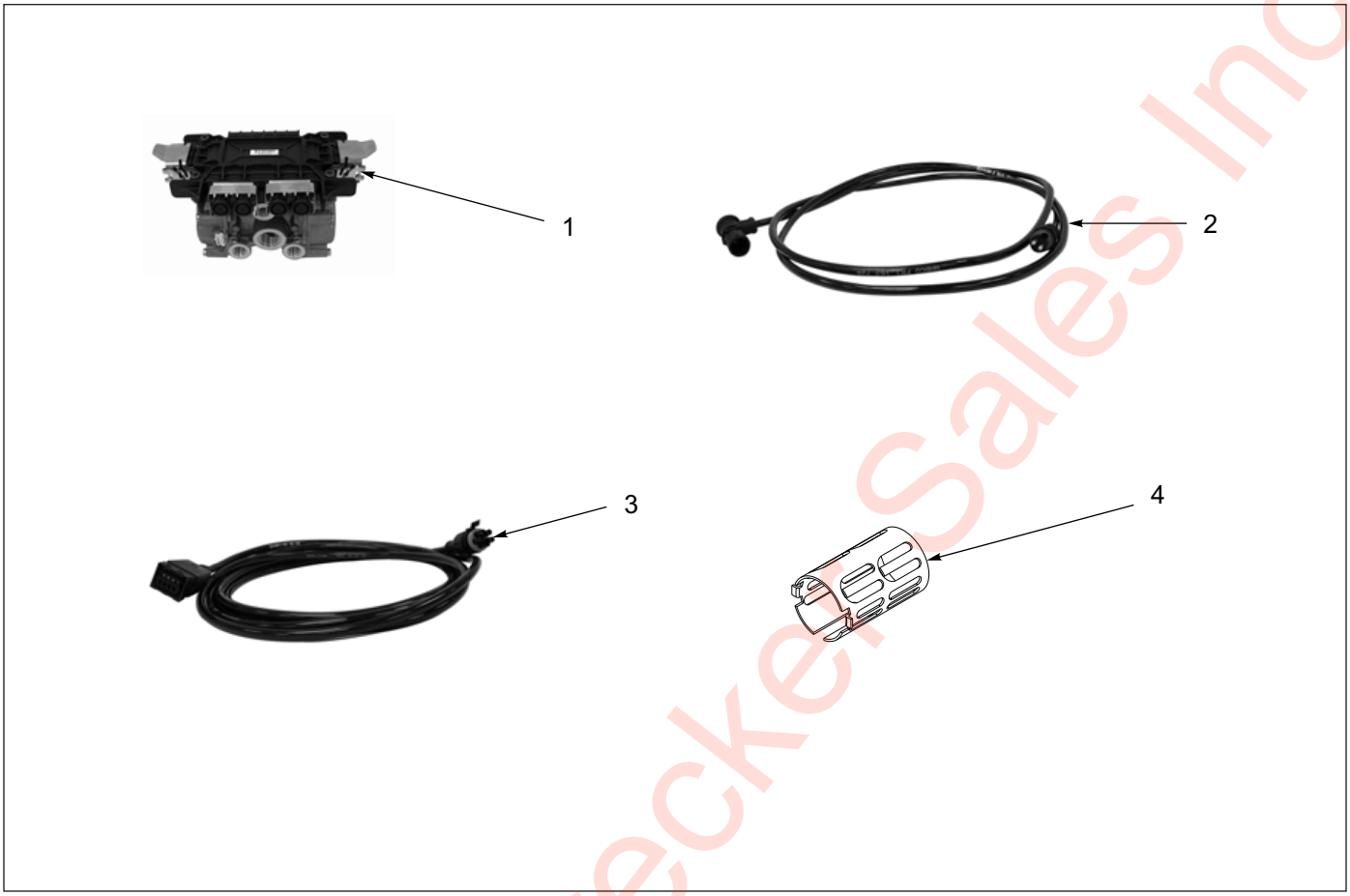

Figure 1-55: ABS Brake Kit - Rockwell

ABS Brake Kit - Rockwell

ITEM	PART NO.	DESCRIPTION	QTY.
	114584	ABS BRAKE KIT 4S/2M	
	114586	ABS BRAKE KIT 4S/2M-TRI/SPRD	
1	114588	ECU/VALVE ASSEMBLY	1
2	101848	SENSOR EXTENSION CABLE - 6 FT **(USED W/ 114584)**	4
2	103861	SENSOR EXTENSION CABLE - 10 FT **(USED W/ 114586)**	4
3	147464	POWER/DIAGNOSTIC CABLE 4.0M/3.0M	1
4	101849	SPRING CLIP, ABS SENSOR	2
5	101847	ABS SENSOR CABLE-4M 90° - 1FT **(NOT SHOWN)**	2
		(SEE PAGES 1-115 FOR REFERENCE)	

Eastern Wrecker Sales Inc

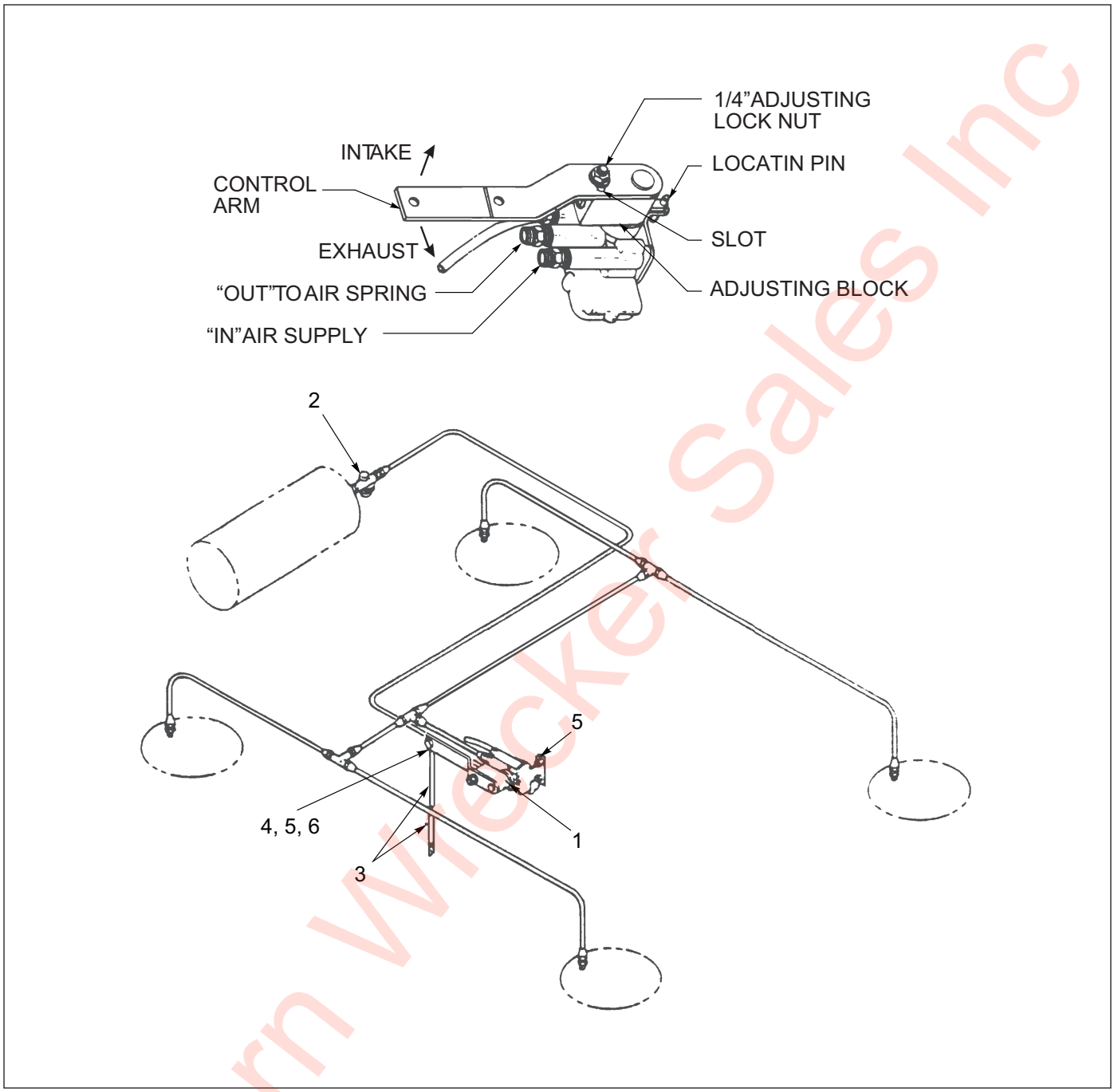

Figure 1-56: Air Control Kit

Air Control Kit

ITEM	PART NO.	DESCRIPTION	QTY.
	102732	AIR CONTROL KIT NEWAY	
1	900 54 007	HEIGHT CONTROL VALVE	1
2	905-54-107	AIR PRESSURE PROTECTION VALVE & FILTER	1
3	111021	SRK - 167 KIT ADJUSTABLE LINK ASSEMBLY	1
4	1-654-010047-04	SCREW, HEX HEAD CAP 1/4-20 X 3/4 GR5	2
5	1-512-010005-01	NUT, HEX LOCK 1/4-20 GRB	2
6	-----	DECAL - OPERATING	1

Eastern Wrecker Sales Inc

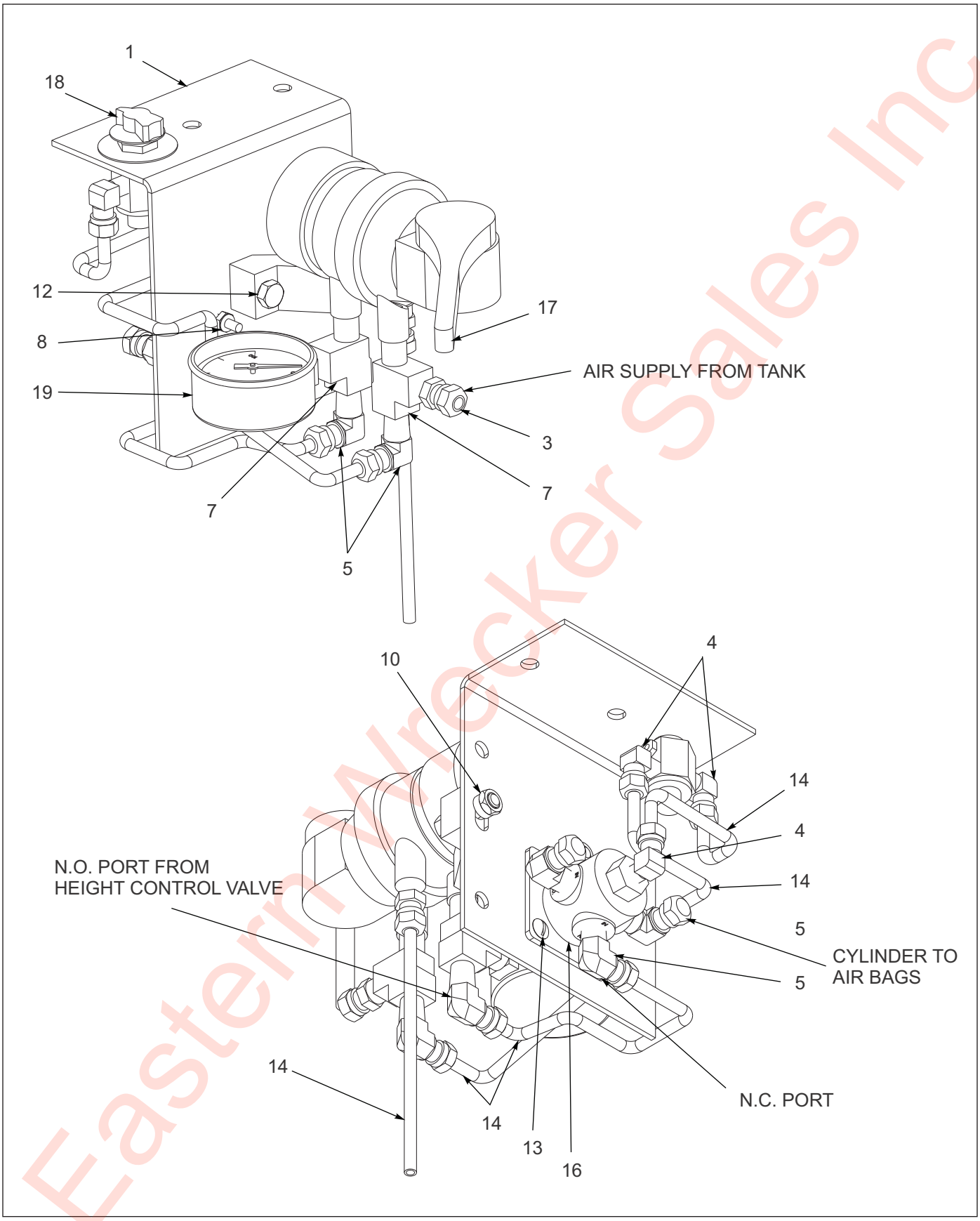

Figure 1-57: Manual Air Height Control Assembly (1 of 2)

Eastern Wrecker Sales Inc

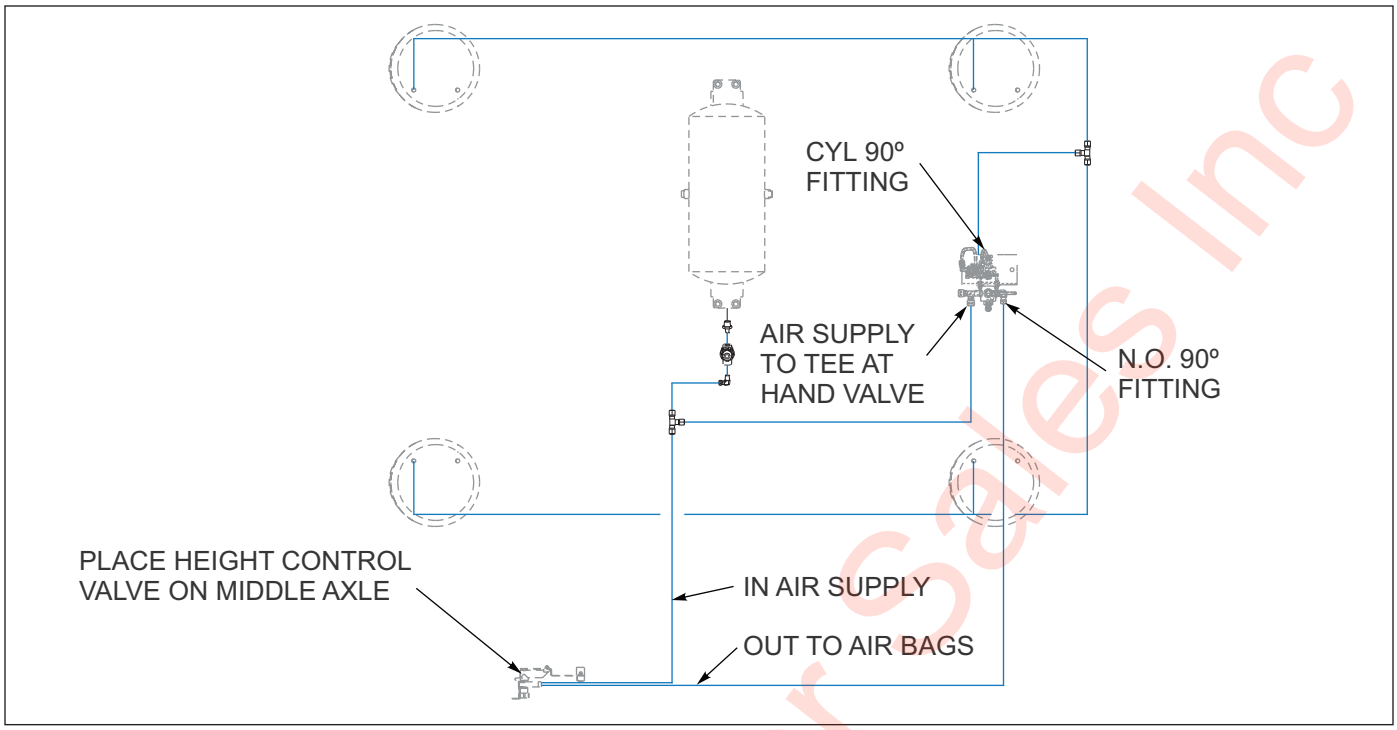

Figure 1-58: Manual Air Height Control Assembly (2 of 2)

Manual Air Height Control Assembly

ITEM	PART NO.	DESCRIPTION	QTY.
	112326	CONTROL ASSEMBLY, AIR R/L	
1	112324	PLATE, MOUNTING AIR LIFT KIT	1
2	112325	AIR CONTROL KIT MANUAL **(ITEMS 16-20)**	1
3	1-297-010007-05	FITTING, AIR	2
4	1-297-010008-05	FITTING, AIR 90	3
5	1-297-010008-07	FITTING, AIR 90	5
6	1-297-010010-01	FITTING, AIR UNION TEE 1/4 **(NOT SHOWN)**	1
7	1-297-010018-02	FITTING, TEE	2
8	1-512-010003-06	NUT, HEX LOCK 10-24	4
9	1-512-010005-03	NUT, HEX LOCK 5/16-18 GRB **(NOT SHOWN)**	3
10	1-512-010005-03	NUT, HEX LOCK 5/16-18 GRB	2
11	1-654-010049-05	SCREW, HEX HEAD CAP 5/16-18 X 1 GR **(NOT SHOWN)**	3
12	1-654-010049-06	SCREW, HEX HEAD CAP 5/16-18 X 1-1/4 GR5	2
13	1-656-010003051	SCREW, RD HEAD MACH #10-24 X 3/4	4
14	1-833-010001	TUBING, NYLON 1/4 OD	AR
15	1-861-010032-09	WASHER, FLAT 5/16 **(NOT SHOWN)**	3
16	900-54-079	PILOT VALVE	1
17	900-54-082	HAND CONTROL VALVE	1
18	900-54-088	VALVE, MANUALLY OPERATED	1
19	-----	AIR GAUGE	1

Eastern Trucker Sales Inc

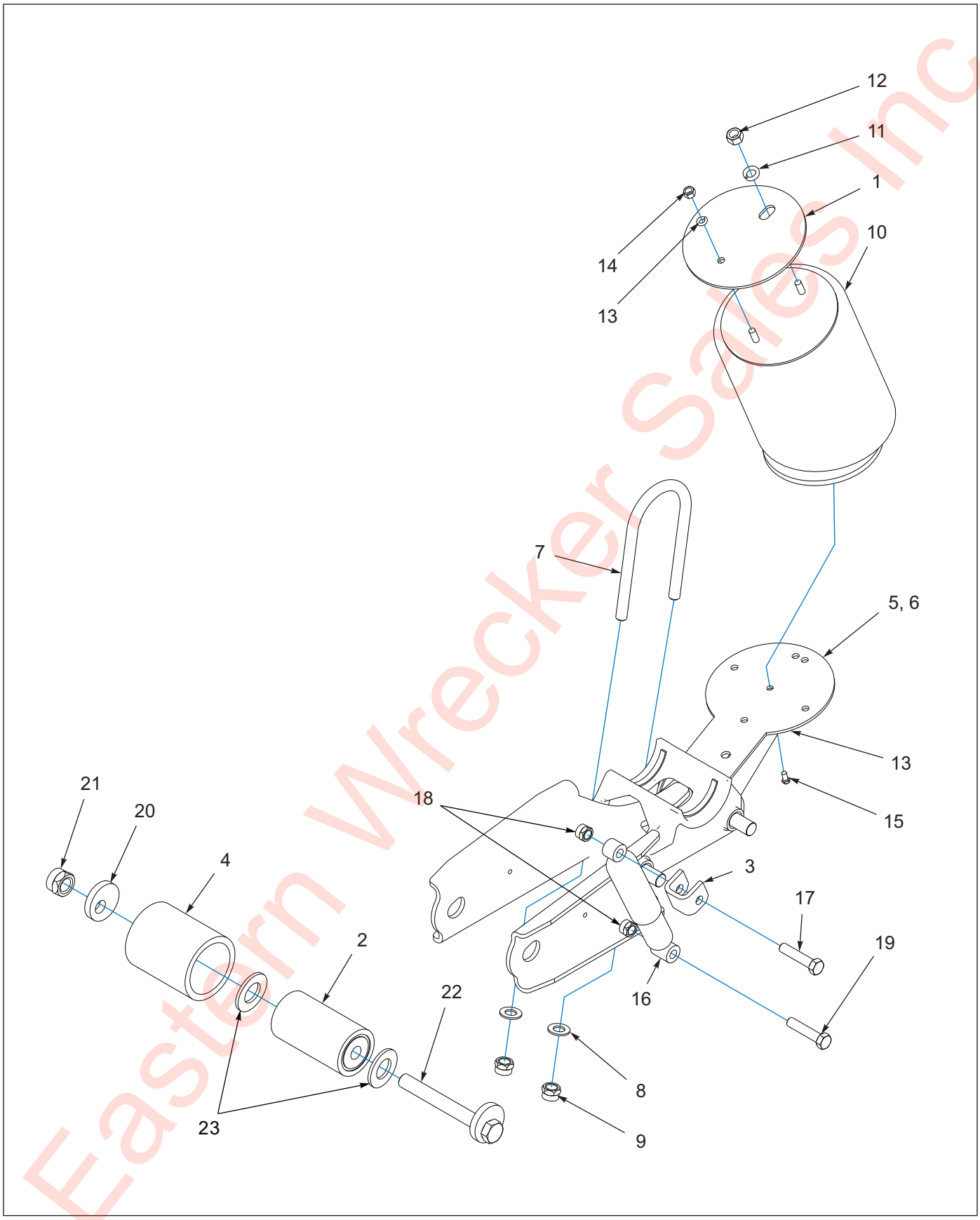

Figure 1-59: Suspension Hanger - RLU 250 FMT (825/835/845 Front)

Eastern Wrecker Sales Inc

Suspension Hanger RLU 250 FMT (825/835/845 Front)

ITEM	PART NO.	DESCRIPTION	QTY.
	128433	SUSPENSION RLU 250 FMT **(825 FRONT, REF ONLY)**	
	167392	SUSPENSION RLU 250 FMT LP **(835 FRONT, REF ONLY)**	
	110621	SUSPENSION BRACKET **(ITEMS 1-4)**	
	110620	SUSPENSION, BEAM RLU 250 FMT **(ITEMS 5-9) (825)**	
	167391	SUSPENSION, BEAM RLU 250 FMT **(ITEMS 5-9) (835/845)**	
	110622	SUSPENSION, FASTENER RLU 250 FMT **(ITEMS 10-23)**	
1	110615	AIR SPRING MOUNTING PLATE	2
2	111029	BUSHING YOKE	2
3	111027	BRACKET, SHOCK UPPER	2
4	111028	BUSHING SLEEVE 5.5	2
5	111034	BEAM EQUALIZING ASSY RH W/ ADAPTERS **(USED ONLY W/ MODEL 825)**	1
5	191588	BEAM EQUALIZING ASSY RH W/ ADAPTERS **(USED ONLY W/ MODELS 835/845)**	1
6	111035	BEAM EQUALIZING ASSY LH W/ ADAPTERS **(USED ONLY W/ MODEL 825)**	1
6	191589	BEAM EQUALIZING ASSY LH W/ ADAPTERS **(USED ONLY W/ MODELS 835/845)**	1
7	111033	U-BOLT .875-9 X 11 GR8	2
8	936 00 162	WASHER, FLAT .78	4
9	934 00 498	NUT, HEX LOCK .875-9 GRC	4
10	111036	AIR SPRING	2
11	936 00 077	3/4 WASHER	2
12	934 00 149	3/4-16 HEX NUT **(TOP OF AIR SPRING)**	2
13	12486400-520	WASHER, 1/2	2
14	1-654-010051-05	SCREW, HEX HEAD CAP 3/8-16 X 1 GR5	2
15	12486400-521	1/2-13 HEX NUT	2
16	900-44-162	SHOCK ABSORBER	2
17	12486400-526	SCREW, HEX HEAD CAP 3/4-10 X 3-1/2 **(UPPER SHOCK)**	2
18	934-00-492	LOCK NUT 3/4-10 **(UPPER SHOCK)**	4
19	129004	SCREW, HEX HEAD CAP 3/4-10 X 4 GR5 **(LOWER SHOCK)**	2
20	129006	ALIGN BLOCK NON-WELD	2
21	111008	1-1/8” LOCK NUT	6
22	111038	ALIGNMENT BLOCK ASSEMBLY, PIVOT	2
23	111037	WEAR WASHER 1.125	4
24	134144	ALIGNMENT, BLOCK ASSY **(ITEMS 20-23)**	1

Eastern Wrecker Sales Inc

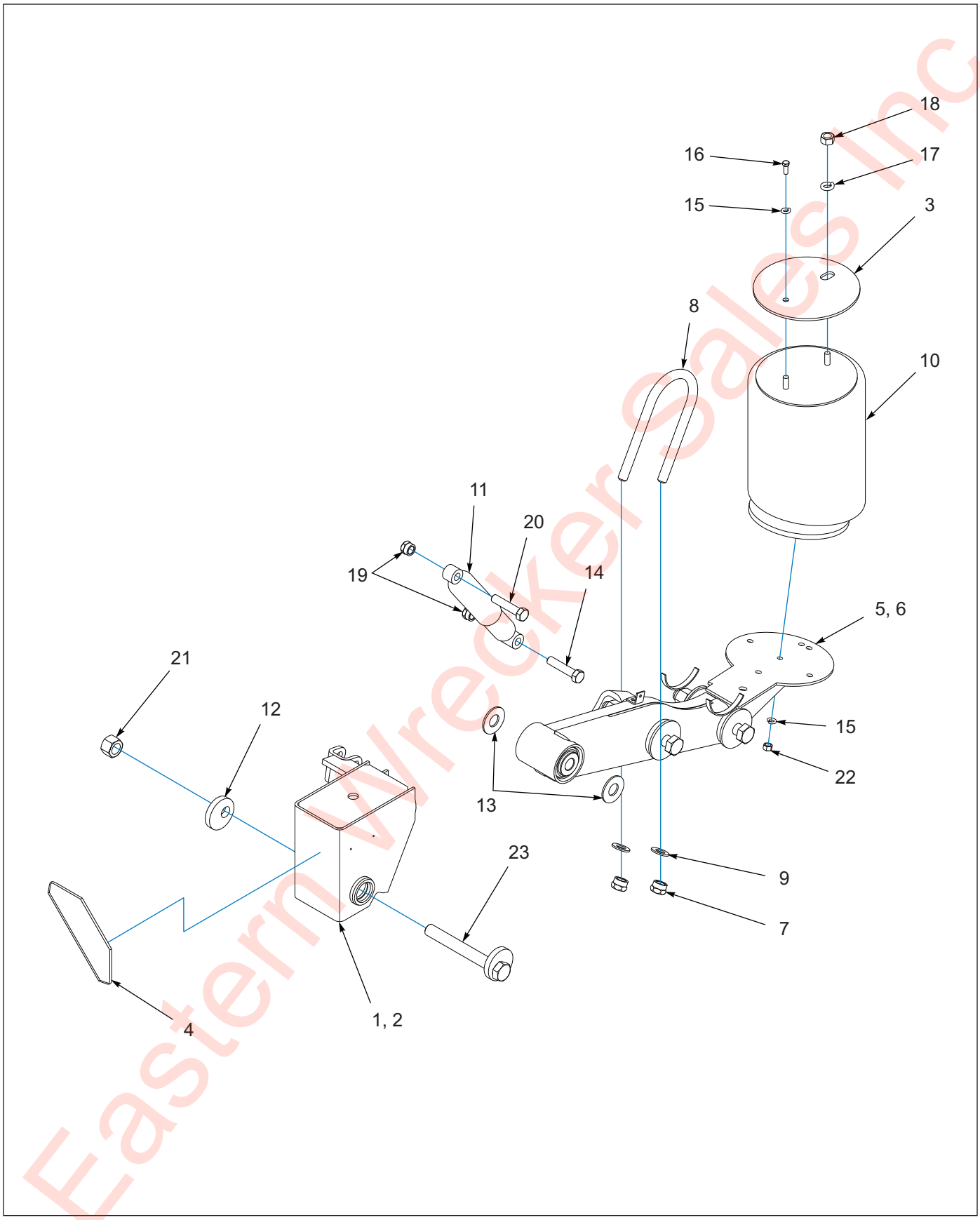

Figure 1-60: Suspension Hanger - RLU-250-9-4

Eastern Wrecker Sales Inc

Suspension Hanger - RLU 250-9-4

ITEM	PART NO.	DESCRIPTION	QTY.
	128434	SUSPENSION RLU-250-9-4 **(MODEL 825/835/845 REAR, REF ONLY)**	
	110617	SUSPENSION BRACKET **(ITEMS 1-4)**	
	110616	SUSPENSION, BEAM RLU 250-9-4 **(ITEMS 5-9)**	
	110618	SUSPENSION, FASTENER RLU 250-9-4 **(ITEMS 10-23)**	
1	111026	FRAME BRACKET **(CURBSIDE EZ-ALIGN)**	1
2	111025	FRAME BRACKET **(ROADSIDE EZ-ALIGN)**	1
3	110615	PLATE, AIR BAG MOUNT	2
4	900 23 002	ANGLE BRACE	2
5	111031	EQUALIZING BEAM W/ ADAPTERS **(ROADSIDE)**	1
6	111030	EQUALIZING BEAM W/ ADAPTERS **(CURBSIDE)**	1
7	934 00 498	NUT, HEX LOCK .875-9 GRC	4
8	111033	U-BOLT .875-9 X 11 GR8	2
9	936 00 162	WASHER, FLAT .78	4
10	111036	AIR SPRING	2
11	900-44-162	SHOCK ABSORBER	2
12	129006	ALIGN BLOCK NON-WELD	2
13	900-36-177	1-1/8” SPACER WASHER	4
14	129004	SCREW, 3/4-10X4 GR5 **(LOWER SHOCK)**	2
15	12486400-520	WASHER, 1/2	2
16	1-654-010051-05	SCREW, HEX HEAD CAP 3/8-16 X 1 GR5	2
17	1-512-010005-15	3/4 WASHER	2
18	1-654-010061-13	3/4-16 HEX NUT **(TOP OF AIR SPRING)**	2
19	1-512-010007-09	NUT, HEX 3/4-10 **(UPPER SHOCK)**	4
20	12486400-526	SCREW, HEX HEAD CAP 3/4-10 X 3-1/2 **(UPPER SHOCK)**	2
21	111008	1-1/8” LOCK NUT	2
22	12486400-521	1/2-13 HEX NUT	2
23	129005	ALIGNMENT BLOCK ASSEMBLY **(EZ-ALIGN)**	2
24	170115	WIRE ROPE STRAP KIT RLU 250-9-4	2

Eastern Wrecker Sales Inc

Axle & Brake Assemblies

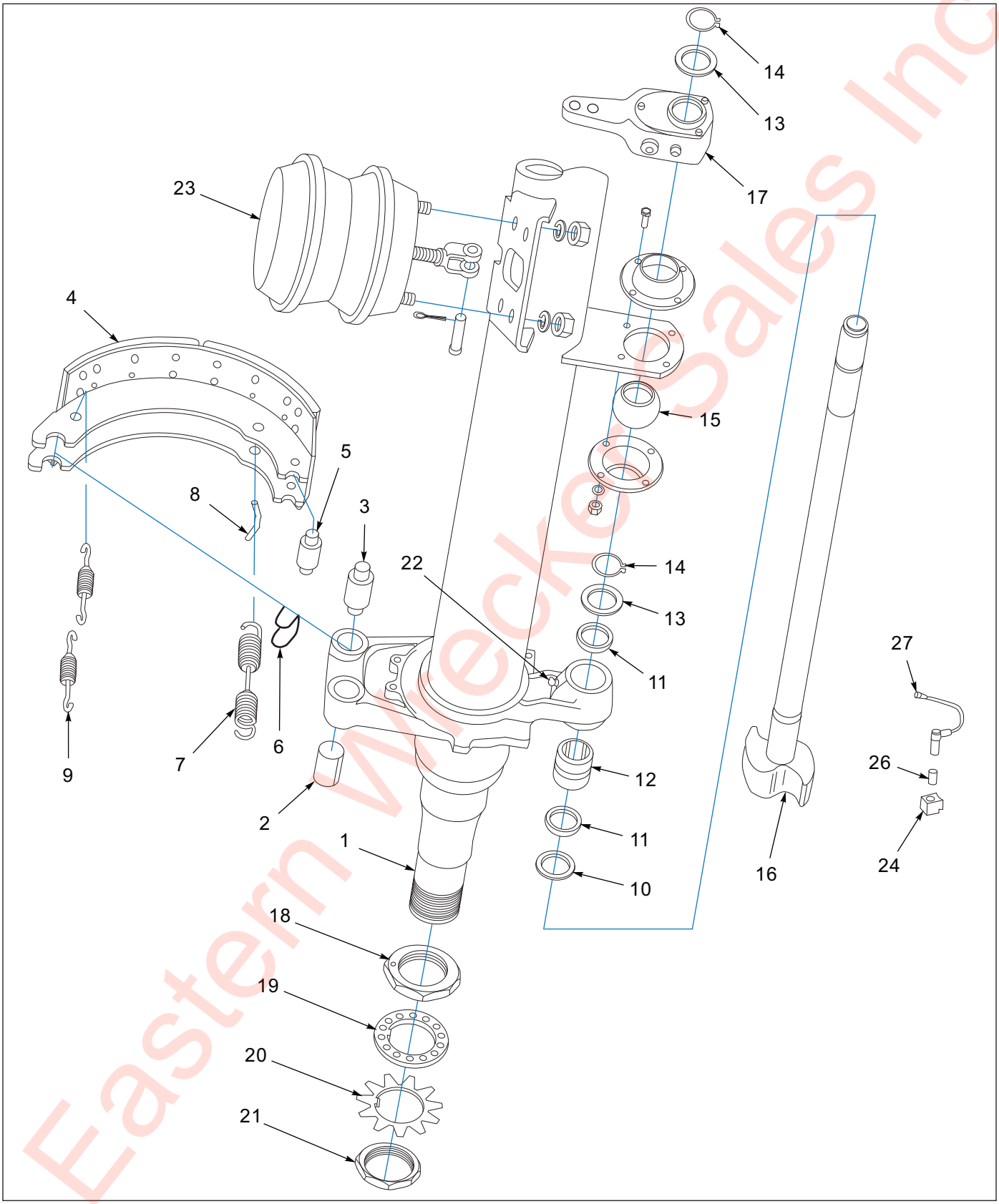

Figure 1-61: Axle and Brake Assembly - Dexter 16-12” X 7”

Eastern Wrecker Sales Inc

Axle and Brake Assembly - Dexter 16-1/2” x 7”

ITEM	PART NO.	DESCRIPTION	QTY.
	115717	AXLE 79” TRK, 16.5 X 7 SPG BRK 25K	
	115722	AXLE 79” TRK, 16.5 X 7 SER BRK 25K	
	138956	AXLE 79” TRK, 16.5 X 7 SPG BRK 25K TIS	
	138960	AXLE 79” TRK, 16.5 X 7 SER BRK 25K TIS	
1	-----	BEAM W/ BRACKETS	1
2	-----	BUSHING, SPIDER ANCHOR PIN	4
3	-----	PIN, ANCHOR	4
4	040-180-00	SHOE AND LINING ASSEMBLY	4
5	014-065-00	ROLLER	4
6	071-122-00	RETAINER, ROLLER	4
7	046-096-00	SPRING, SHOE RETRACTOR	2
8	056-018-00	RETAINER PIN RETRACTOR SPRING	4
9	046-097-00	KEEPER SPRING	4
10	005-096-00	WASHER CAMSHAFT	2
11	010-052-00	SEAL GREASE	4
12	-----	BUSHING CAMSHAFT SPIDER	2
13	-----	WASHER CAMSHAFT END	2
14	069-078-00	RETAINER, CAMSHAFT END	2
15	-----	BUSHING CAMSHAFT SUPPORT	2
16	137461	CAMSHAFT, 25" LH	1
16	137485	CAMSHAFT, 25" RH	1
17	139383	SLACK ADJUSTER, AUTOMATIC	2
18	006-114-00	NUT, INNER SPINDLE	2
19	005-098-00	WASHER, SPINDLE LOCK	2
20	005-099-00	WASHER, TABBED SPINDLE LOCK	2
21	006-115-00	NUT, OUTER SPINDLE	2
22	-----	FITTING, GREASE 45°	2
23	034-058-01	AIR CHAMBER, SPRING BRAKE	4
23	034-057-01	AIR CHAMBER, SERVICE BRAKE	2
24	103805	SENSOR BLOCK	2
26	144979	RETAINER CLIP	2
27	101847	ABS SENSOR CABLE, 4M 90DEG **(1 FOOT)**	2
-----	138090	CAMSHAFT REPAIR KIT **(ITEMS 10-15, & 22)**	REF
-----	K71-136-00	BRAKE SHOE HARDWARE KIT **(ITEMS 2, 3, 5, 6, 7, 8, & 9)**	REF

Eastern Trailer Sales Inc

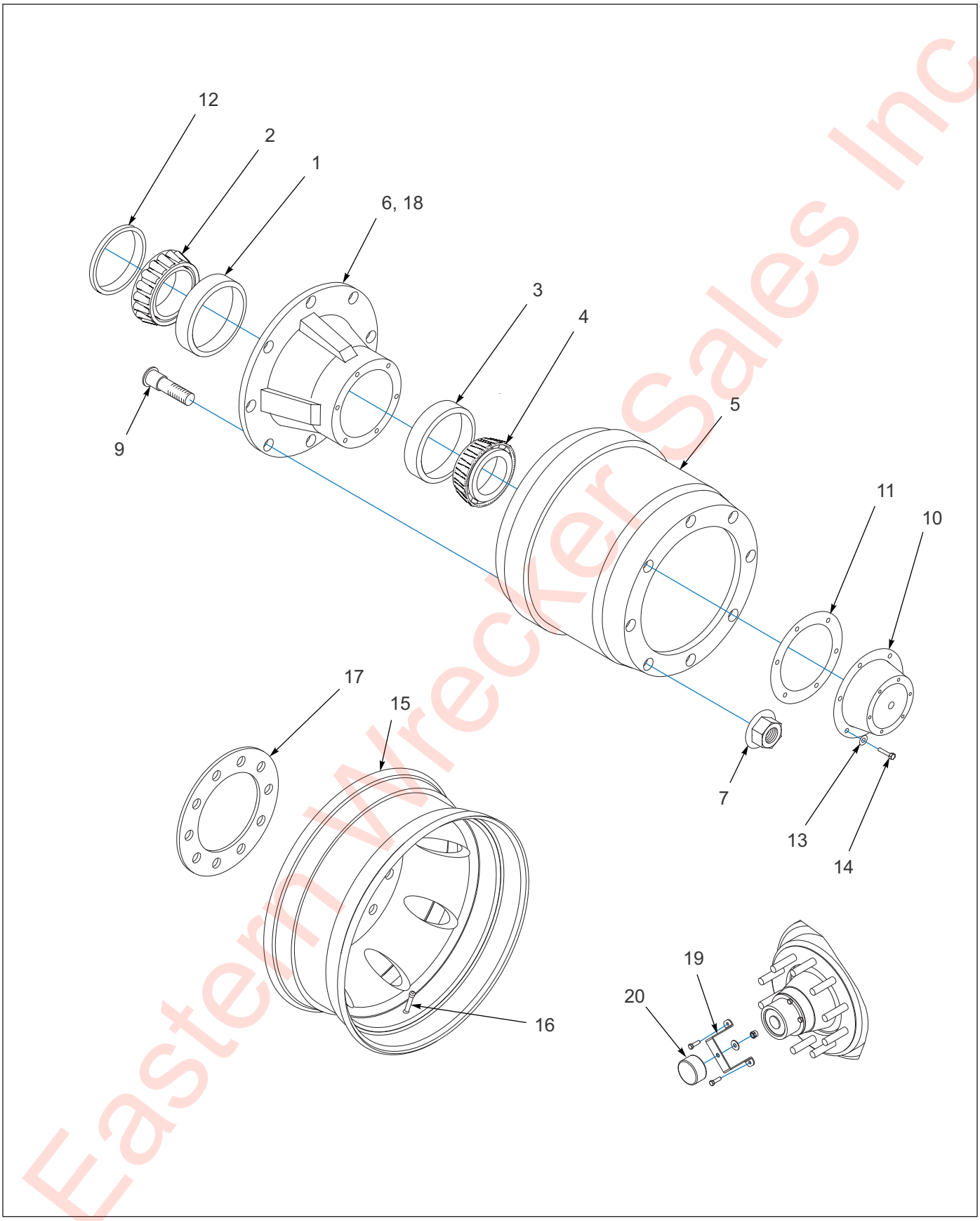

Eastern Wrecker Sales Inc

Figure 1-62: Outboard Pilot Mount Hub and Drum

Outboard Pilot Mount Hub and Drum Assembly

ITEM	PART NO.	DESCRIPTION	QTY.
1	HM218210	INNER BEARING CUP	1
2	HM218248	INNER BEARING CONE	1
3	HM212011	OUTER BEARING CUP	1
4	HM212049	OUTER BEARING CONE	1
5	110976	OUTBOARD MOUNTED BRAKE DRUM	1
6	110975	HUB W/ STUDS	1
7	179933	NUT FLANGE MM22X1.5	10
9	113536	STUD R.H. 22MM 3.5 STANDOUT	10
10	4009	CAP, HUB	1
11	3067	GASKET, OIL CAP	1
12	3-659-010012	SEAL	1
13	1-861-010034-10	WASHER, SPLIT LOCK 5/16	6
14	1-654-010049-03	SCREW, HEX HEAD CAP 5/16-18 GR5	6
15	3-870-010106	WHEEL, POLISHED ALUM PILOT MNT 22.5 X 7.50 **(10 BOLT)**	1
15	111652	WHEEL, PILOT MNT 22.5 X 8.25, PP **(10 BOLT) (ALUM COLOR.)**	1
15	3-870-010116	WHEEL, MACHINED ALUM PILOT MNT 22.5 X 7.50 **(10 BOLT)**	1
15	3-870-010110	WHEEL, DISC PILOT MNT 22.5 X 8.25 **(10 BOLT)(STD. STEEL)**	1
15	111416	WHEEL, ALUM PILOT 22.5 X 8.25 POL **(10 BOLT)**	1
15	111417	WHEEL, ALUM PILOT 22.5 X 8.25 MACH **(10 BOLT)**	1
15	134757	WHEEL, ALUM PILOT 22.5 X 8.25 POL **(10 BOLT)**	1
15	139600	WHEEL, ALUM DURABRITE 255/70R GY **(10 BOLT)**	1
16	TR573	VALVE STEM	1
16	TR545D	VALVE STEM **(ALUMINUM)**	1
17	-----	ABS TONE RING **(NOT SOLD SEPARATELY)**	1
18	3-870-010107	WHEEL GUARD 10 HOLE 285.75MM BC	
19	137108	HUBODOMETER 255/70R22.5 TIRE **(ITEMS 20 & 21)**	1
20	112529	BRACKET, HUBODOMETER	1
21	113109	HUBODOMETER, 572 RPM	1

Eastern Wrecker Sales Inc

Flip Assemblies

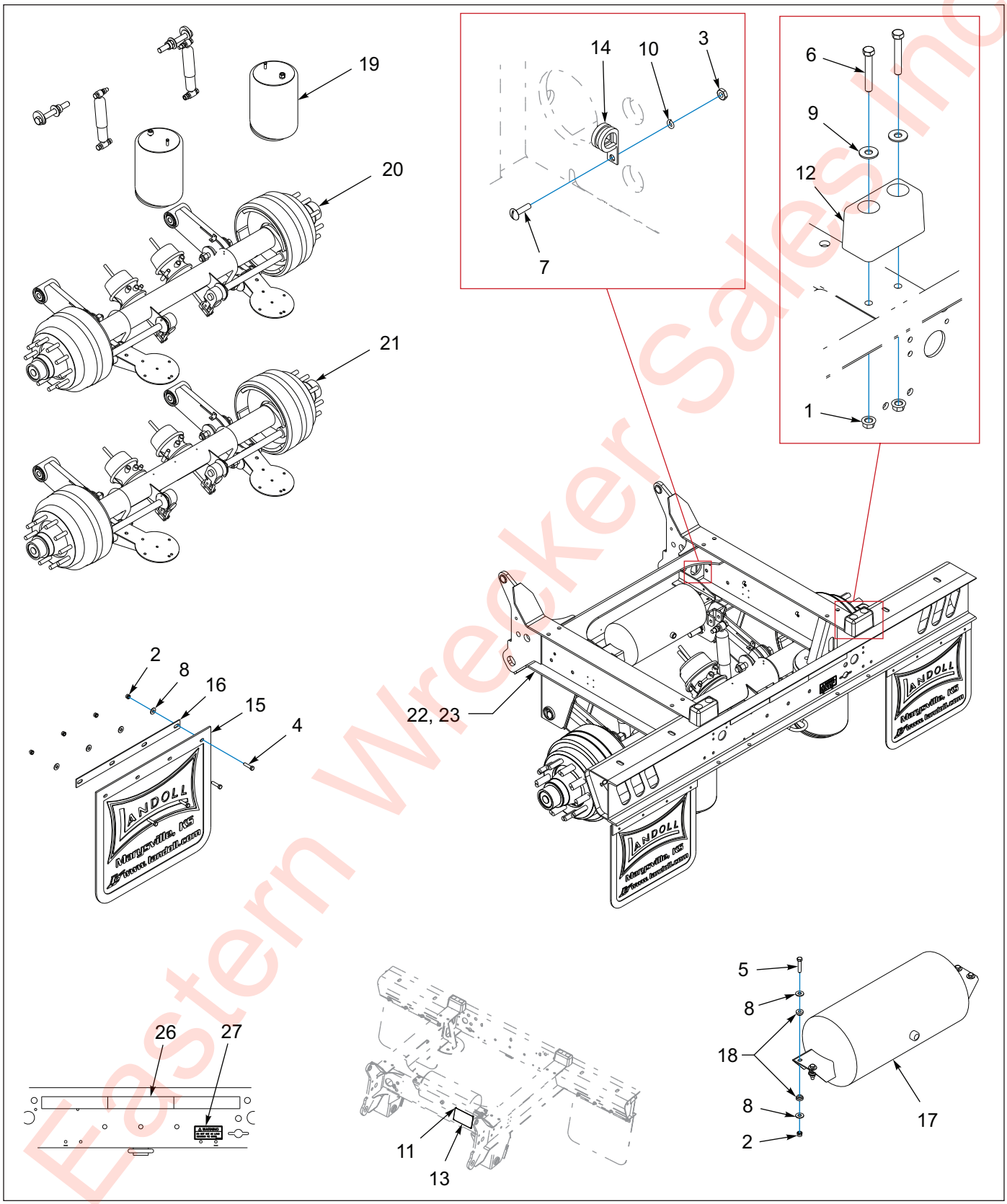

Figure 1-63: General Assembly

Eastern Wrecker Sales Inc

General Assembly

ITEM	PART NO.	DESCRIPTION	QTY.			
	198709	FLIP ASSY 835EAG-60 GROTE	*			
	198710	FLIP ASSY 835EAG-60 GROTE TIS		*		
	198711	FLIP ASSY 800EAG-60 GROTE GALV			*	
	198712	FLIP ASSY 800EAG-60 GRT TISGAL				*
1	1-510-010003-09	NUT,1/2-13 FLANGE HD,SERRATED	4	4	4	4
2	1-512-010005-05	NUT, HEX, SLFLKG GRB 3/8-16	12	12	12	12
3	1-512-010007-03	NUT, HEX 10-24	1	1	1	1
4	1-654-010051-07	SCREW,HEX CAP,3/8-16UNCX1-1/2	8	8	8	8
5	1-654-010051-08	SCREW,HEX CAP,3/8-16X1-3/4 G	4	4	4	4
6	1-654-010055-10	SCREW HEX CAP 1/2-13X3-1/4GR5	4	4	4	4
7	1-656-010003051	SCREW,RH HD MACH 10-24X3/4	1	1	1	1
8	1-861-010032-11	WASHER, FLAT 3/8 W ZP/CD	16	16	16	16
9	1-861-010032-15	WASHER, FLAT 1/2 W ZP/CD	4	4	4	4
10	1-861-010034-07	WASHER,LKG,HLCL SPR, NO 10	1	1	1	1
11	12420301-017	RIVET,BLIND .156 X 1/4 GRIP	4	4	4	4
12	128874	BUMPER RUBBER 6X3X3-1/2	2	2	2	2
13	155780	TRAILER VIN PLATE B	1	1	1	1
14	239-9076-006	CLAMP 3/4,HOSE LOOM, TUBE SPT	1	1	1	1
15	3-485-010001	FLAP, MUD 21 IN	2	2	2	2
16	3-762-010017	CLAMP MUD FLAP	2	2	2	2
17	3-780-010002	TANK AIR 9.5X22.5 .5NPT PORTS	1	1	1	1
18	805-2	BUSHINGS, STEP	8	8	8	8
19	110618	SUSPENSION,FASTNR,RLU 250-9-4 **(SEE PAGE 1-112)**	1	1	1	1
20	115756	AXLE WLDMT 2516 SPG 79 327CTR	1	--	1	--
21	138962	AXLE WLDMT 2516SPG 79 TIS	--	1	--	1
22	198706	FLIP WLDMT 835E W/BUSHING	1	1	--	--
23	198707	GALV OF 198706 60" FLIP WLDMT	--	--	1	1
24	3-201-010002	CONDUIT 3/8 PLASTIC FLEX **(NOT SHOWN)**	1	1	1	1
25	3-395-010001	CF FIRE HOSE **(NOT SHOWN)**	1	1	1	1
26	3-573-010377	DECAL, 2"REFLEXITE TAPE,RD/WHT	48	48	48	48
27	3-573-010496	DECAL WARNING TIE DOWN	1	1	1	1

Eastern Wacker Sales Inc

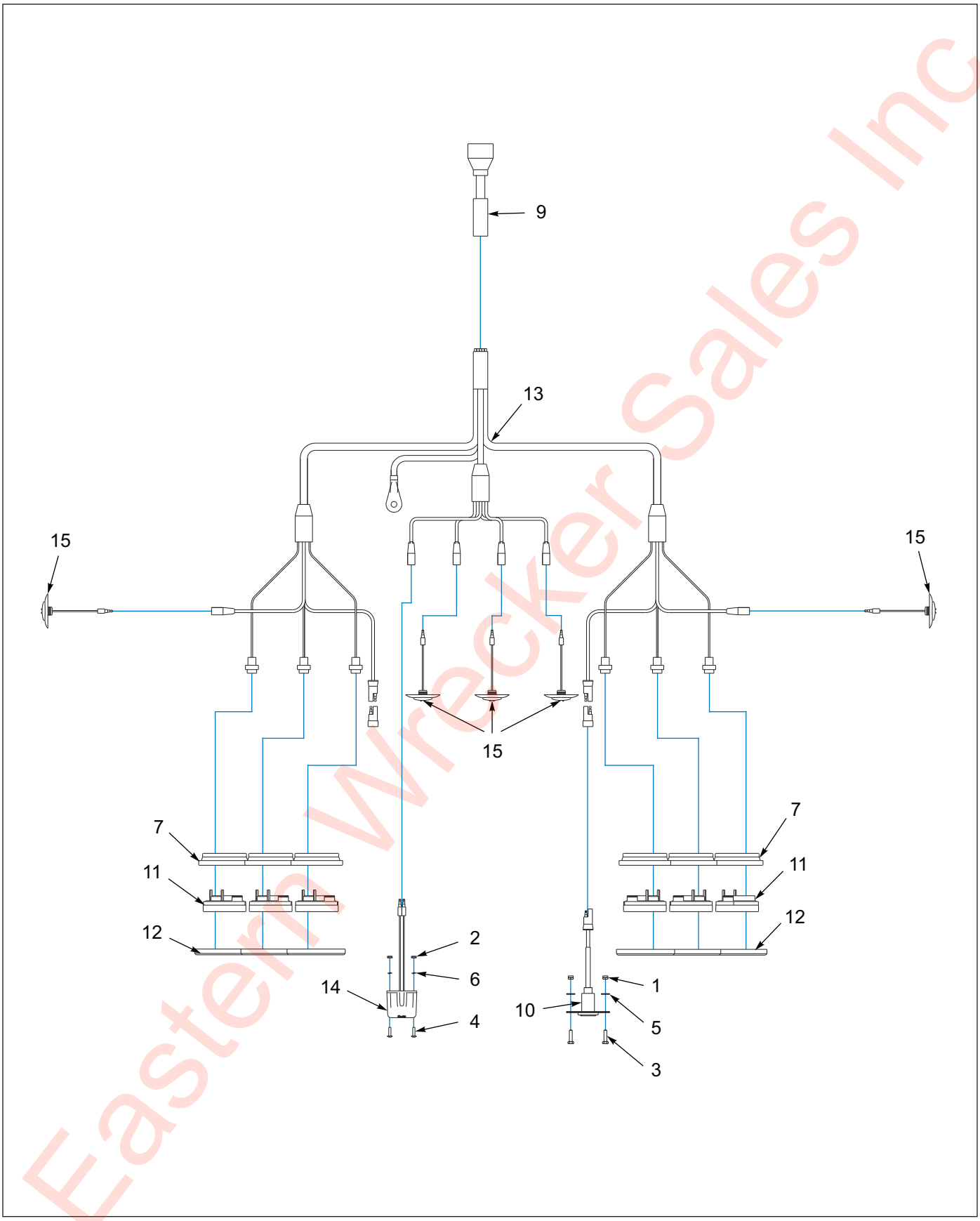

Figure 1-64: Electrical System

Eastern Wrecker Sales Inc

Electrical System

ITEM	PART NO.	DESCRIPTION	QTY.
	198709	FLIP ASSY 835EAG-60 GROTE	
	198710	FLIP ASSY 835EAG-60 GROTE TIS	
	198711	FLIP ASSY 800EAG-60 GROTE GALV	
	198712	FLIP ASSY 800EAG-60 GRT TISGAL	
1	1-512-010005-01	NUT,HEX,SLFLKG GRB 1/4-20	2
2	1-512-010007-03	NUT, HEX 10-24	2
3	1-654-010047-06	SCREW,HX CP 1/4-20UNCX1 GR5	2
4	1-656-010003051	SCREW,RH HD MACH 10-24X3/4	2
5	1-861-010032-07	WASHER,FLAT 1/4 ZP	2
6	1-861-010034-07	WASHER,LKG,HLCL SPR, NO 10	2
7	143114	GROMMET OVAL GROTE **(BEFORE 01/02/20)**	6
8	143123	GREASE DIELECTRIC 4 OZ TUBE **(NOT SHOWN)**	.50
9	146898	HARNESS 7WAY PLUG G/N GROTE	1
10	150116	HARNESS ASSY RCPT 800	1
11	179902	LIGHT S/T/T RED CLEAR LENS GRT **(BEFORE 01/02/20)**	6
11	213295	LIGHT S/T/T RED CLEAR LENS GRT **(AFTER 01/02/20)**	6
12	180570	COVER CHROME OBLONG GROMMET **(BEFORE 01/02/20)**	6
12	213296	COVER CHROME OBLONG GROMMET **(AFTER 01/02/20)**	6
13	187859	HARNESS BUMPER MICRONOVA GROTE	1
14	187860	LIGHT ASSY LICENSE LED GROTE	1
15	187864	LIGHT RED LED.75CL/MK CLEAR CB	5

Eastern Wrecker Sales Inc

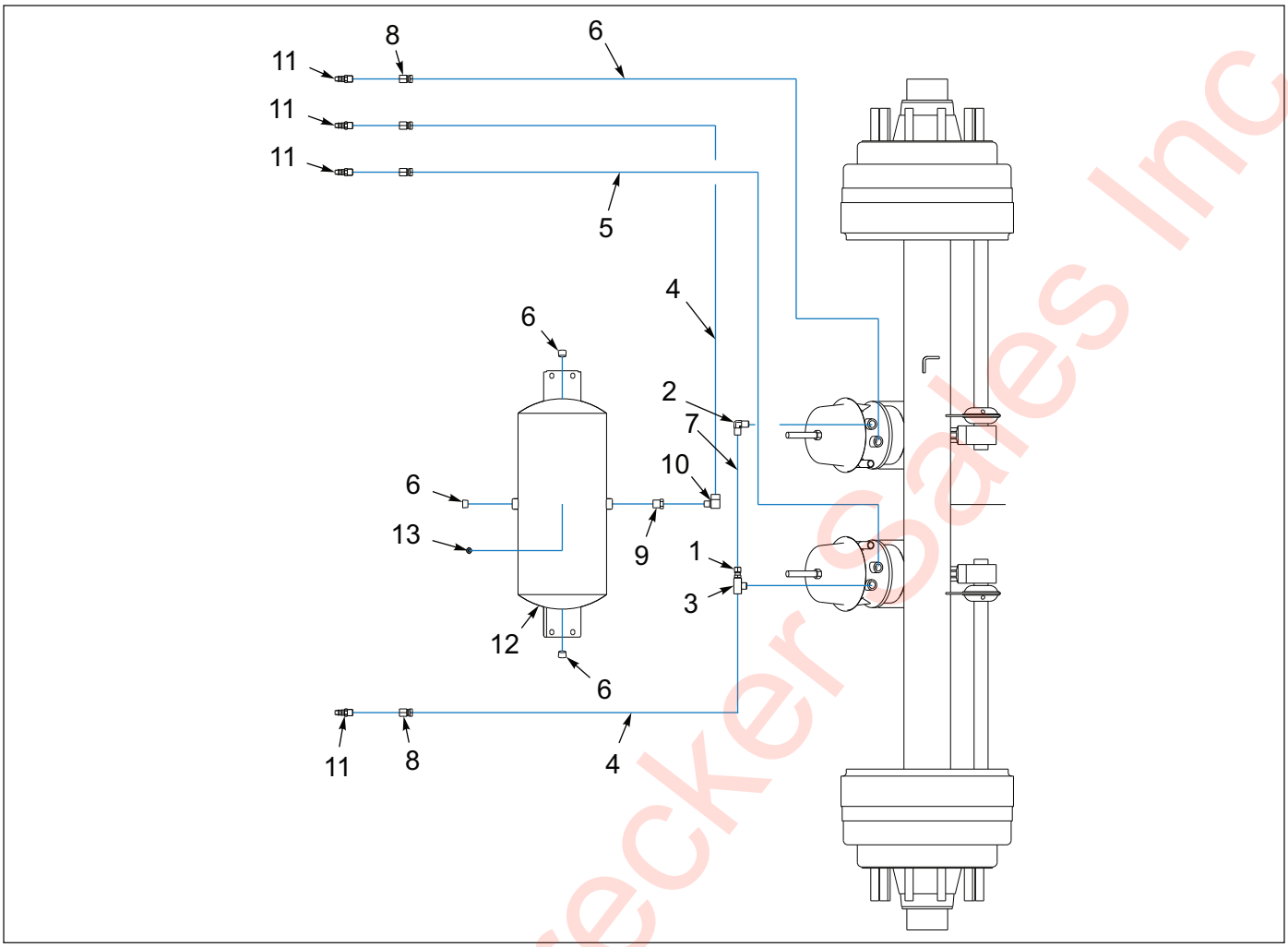

Figure 1-65: Air Brake System

Air Brake System

ITEM	PART NO.	DESCRIPTION	QTY.
	198709	FLIP ASSY 835EAG-60 GROTE	
	198710	FLIP ASSY 835EAG-60 GROTE TIS	
	198711	FLIP ASSY 800EAG-60 GROTE GALV	
	198712	FLIP ASSY 800EAG-60 GRT TISGAL	
1	1-297-010007-12	FITTING AIR 3/8TUBE X 3/8NPT	1
2	1-297-010008-20	FITTING,AIR 90 3/8TUBEX3/8NPT	1
3	1-297-010017-03	FITTING,BRS PIPE M/BR TEE 3/8	1
4	1-384-010038056	HOSE ASM AIR 3/8X56,W/3/8 END	3
5	1-384-010038072	HOSE ASM AIR 3/8X72,W/3/8 END	1
6	1-560-010002-04	PLUG, PIPE, 1/2NPT	3
7	1-833-010002	TUBING NYLON 3/8 OD	AR
8	194414	ADAPTER, 90 FEMALE, 3/8NPT	4
9	2081-8-6S	REDUCER 1/2NPT X 3/8NPT	1
10	2089-6-6S	ADAPTER 90 3/8MPTX3/8FPT	1
11	3-220-010005	COUPLER AIR MALE 3/8-MPT	4
12	3-780-010002	TANK AIR 9.5X22.5 .5NPT PORTS	REF
13	56D4	COCK,DRAIN AIR TANK VEL036019	1

Eastern Wrecker Sales Inc

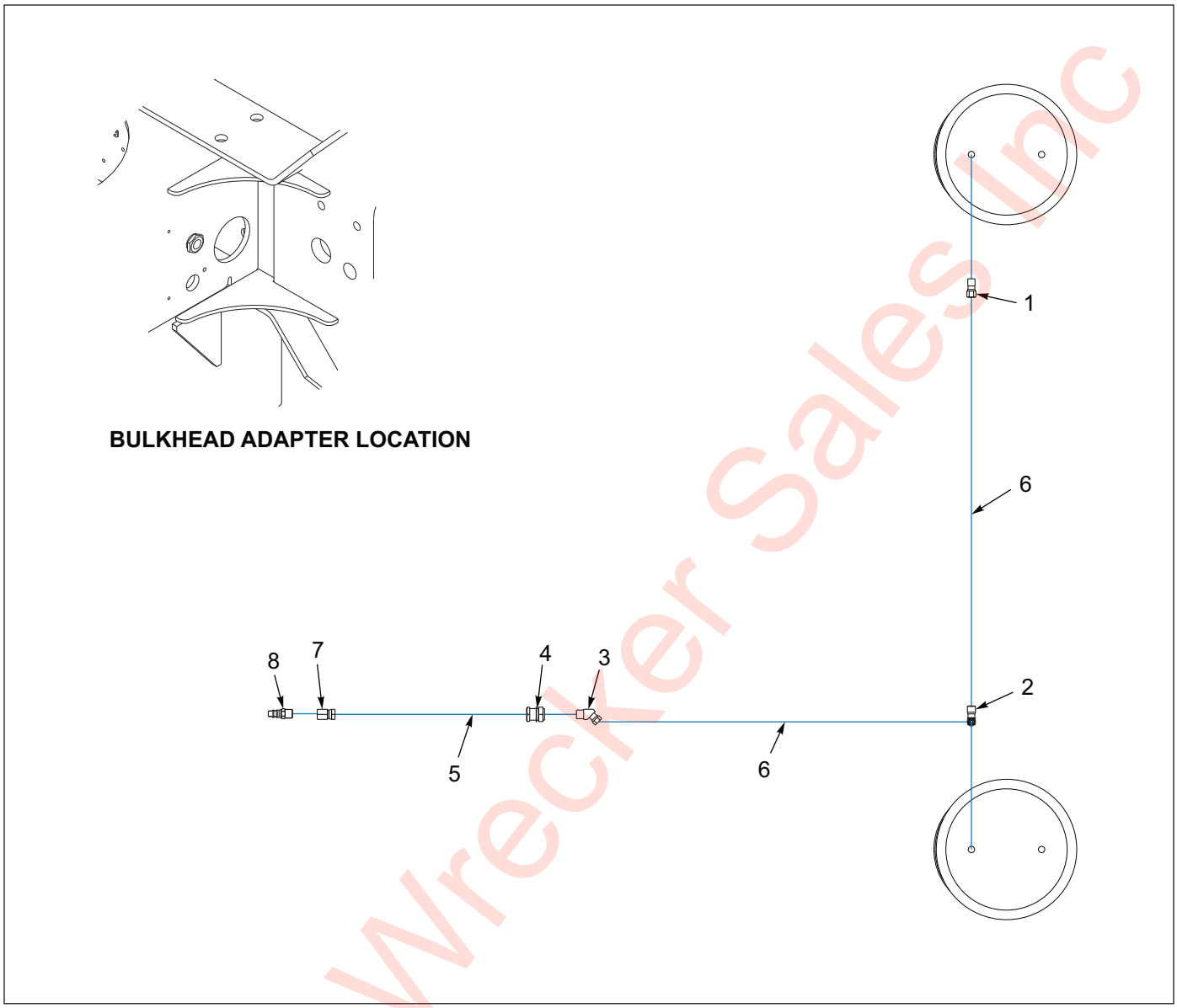

Figure 1-66: Air Ride Suspension

Air Ride Suspension

ITEM	PART NO.	DESCRIPTION	QTY.
	198709	FLIP ASSY 835EAG-60 GROTE	
	198710	FLIP ASSY 835EAG-60 GROTE TIS	
	198711	FLIP ASSY 800EAG-60 GROTE GALV	
	198712	FLIP ASSY 800EAG-60 GRT TISGAL	
1	1-297-010008-18	FITTING,AIR 90 3/8TUBEX1/4NPT	1
2	1-297-010011-04	FITTING,AIR,M/RUN TEE 3/8-1/4	1
3	1-297-010013-12	FITTING AIR 45 M/ELB3/8TX3/8P	1
4	1-297-010022-03	FITTING,AIR ANCHR CPLG, 3/8NPT	1
5	1-384-010038030	HOSE ASM AIR 3/8X30,W/3/8 END	1
6	1-833-010002	TUBING NYLON 3/8 OD	9
7	194414	ADAPTER, 90 FEMALE, 3/8NPT	1
8	3-220-010005	COUPLER AIR MALE 3/8-MPT	1

Eastern Wrecker Sales Inc

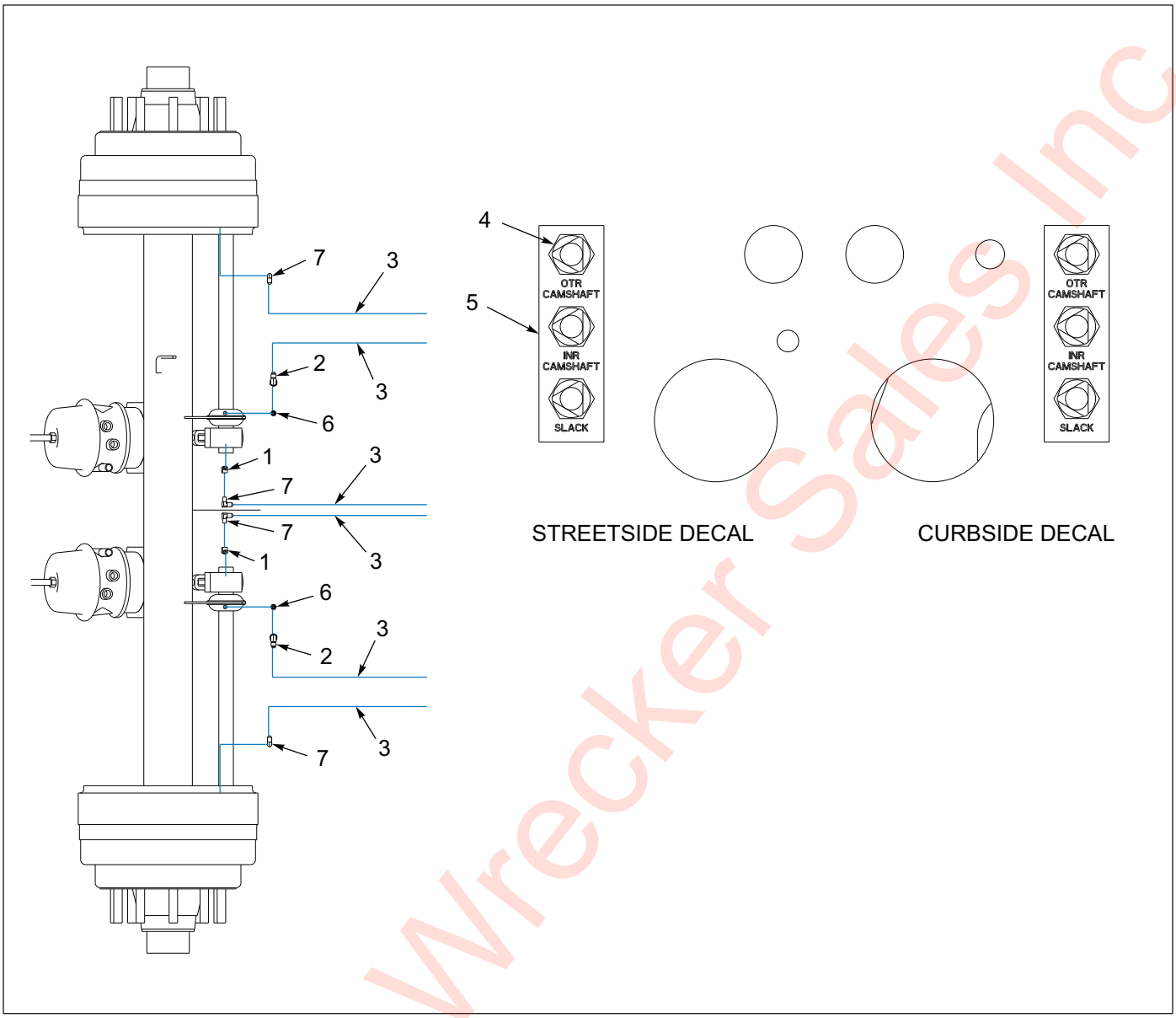

Figure 1-67: Grease Assembly

Grease Assembly

ITEM	PART NO.	DESCRIPTION	QTY.
	198709	FLIP ASSY 835EAG-60 GROTE	
	198710	FLIP ASSY 835EAG-60 GROTE TIS	
	198711	FLIP ASSY 800EAG-60 GROTE GALV	
	198712	FLIP ASSY 800EAG-60 GRT TISGAL	
1	101528	ELBOW,BRASS PIPE STREET	2
2	138155	ADAPTER 90 #4 JIC	2
3	142441	HOSE ASSY,GREASE 1/4X45	6
4	142545	NUT 7/16 FOR BULKHEAD	6
5	142553	DECAL, GREASE TRL U/C	2
6	161797	ADAPTER STR 5-16-18 #4JIC	2
7	2024-2-4S	ADAPTER, ELBOW	4

Eastern Wrecker Sales Inc

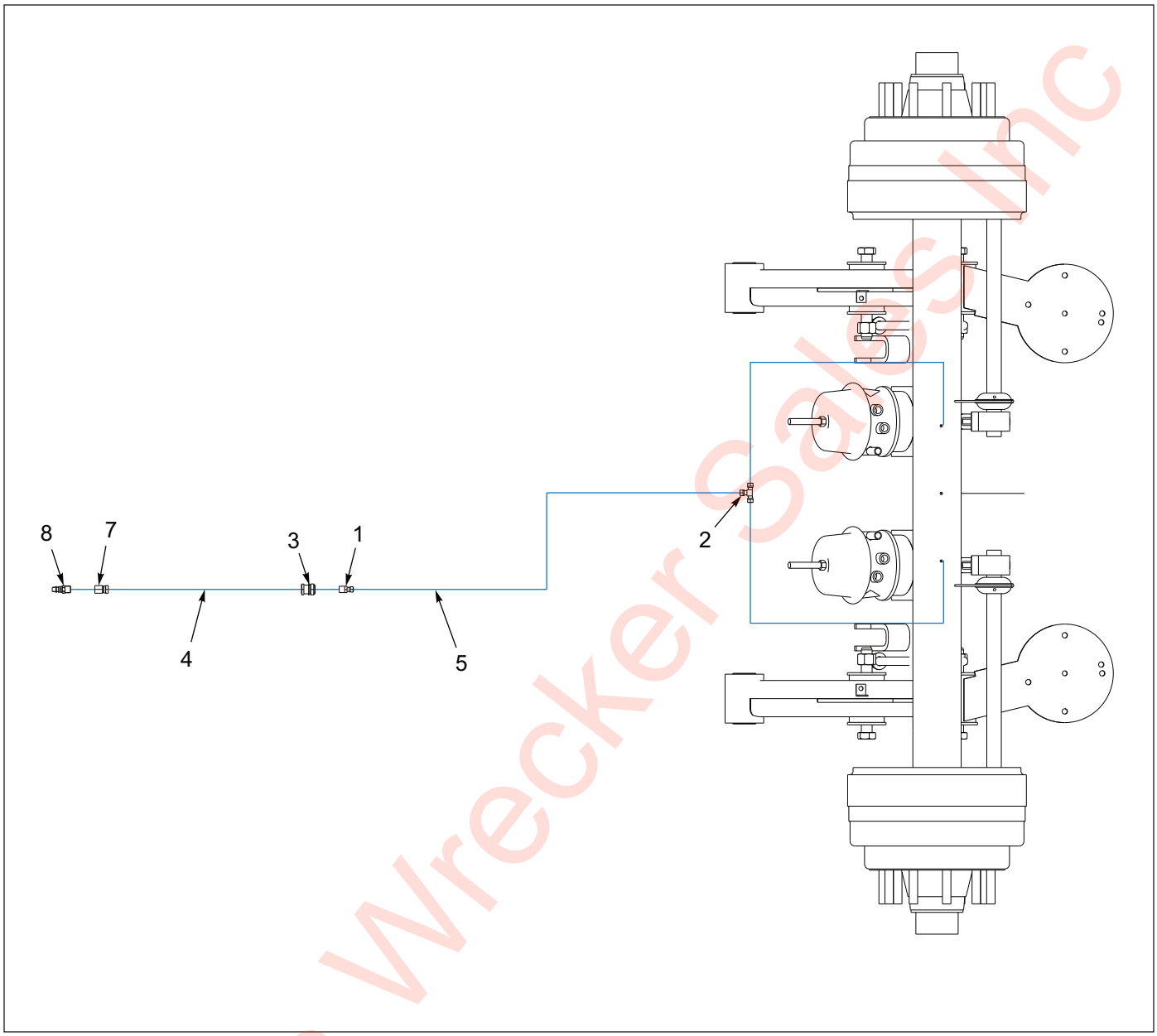

Figure 1-68: Tire Inflation System

Tire Inflation System

ITEM	PART NO.	DESCRIPTION	QTY.
	198710	FLIP ASSY 835EAG-60 GROTE TIS	
	198712	FLIP ASSY 800EAG-60 GRT TISGAL	
1	1-297-010007-06	FITTING,AIR,1/4TUBE TO 3/8NPT	1
2	1-297-010010-01	FITTING,AIR,UNION TEE 1/4	REF
3	1-297-010022-03	FITTING,AIR ANCHR CPLG, 3/8NPT	1
4	1-384-010038030	HOSE ASM AIR 3/8X30,W/3/8 END	1
5	1-833-010001	TUBING NYLON 1/4 OD	REF
6	157700	TIRE INFLATION SYS FLIP AXLE **(SEE PAGE 1-224)**	1
7	2046-6-6S	CONNECTOR HYDR 3/8TO3/8NPTF	1
8	3-220-010005	COUPLER AIR MALE 3/8-MPT	1

Eastern Wrecker Sales Inc

Hydraulic Flip Assemblies

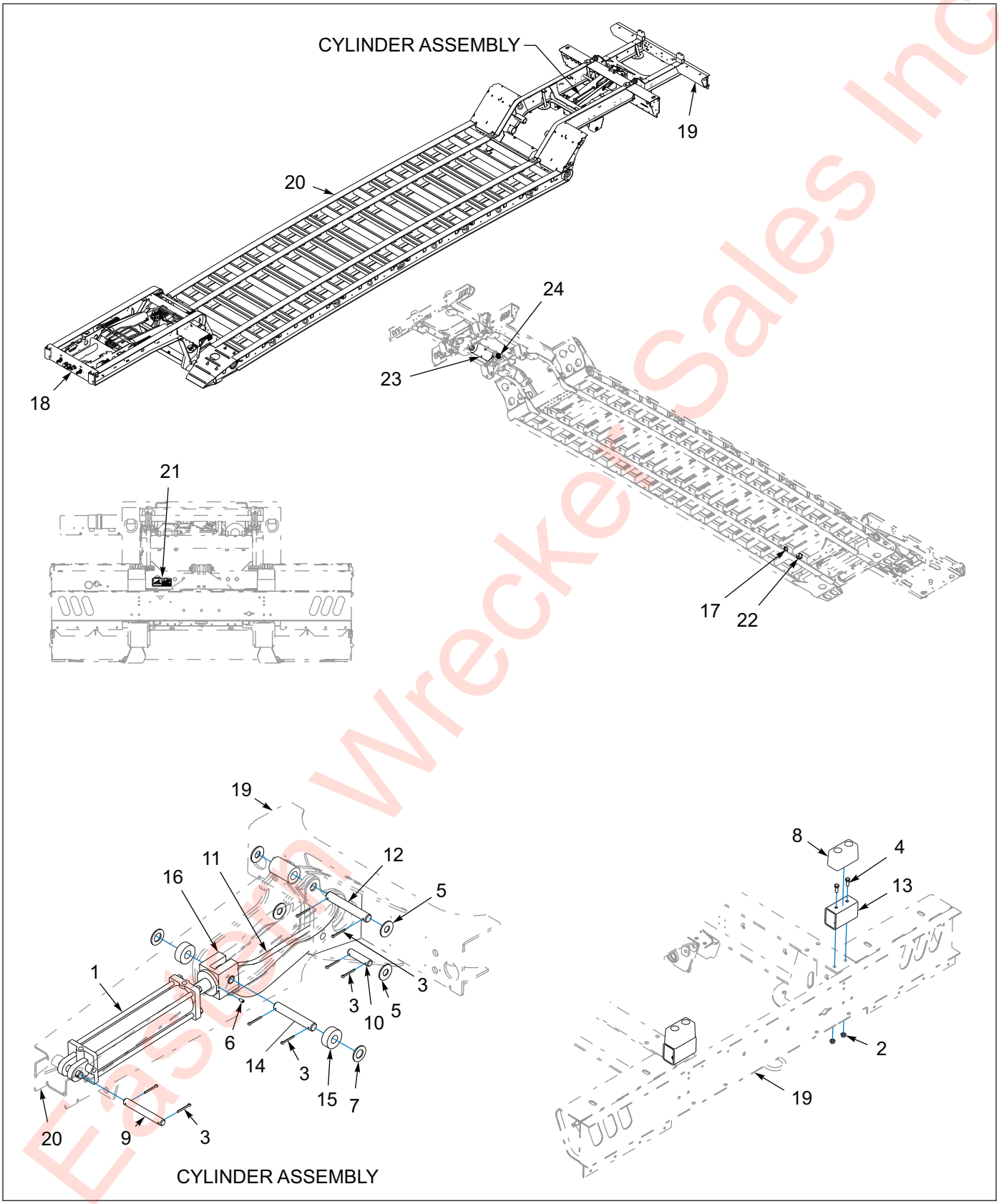

Figure 1-69: Frame & Cylinder Assembly

Eastern Wrecker Sales Inc

Frame & Cylinder Assembly

ITEM	PART NO.	DESCRIPTION	QTY.
	199995	PLUMBING FOR HYD FLIP "E"	
1	1-242-010180-3	CYLINDER,HYD 4X20STRK 3000PSI **(SEE PAGE 1-131)**	1
2	1-510-010003-09	NUT,1/2-13 FLANGE HD,SERRATED	4
3	1-557-010362-63	PIN,COTTER 1/4X2 ZP	8
4	1-654-010055-02	SCREW 1/2-13UNCX1-1/4 CP GR5	4
5	1-861-010032-25	WASHER FL 1IN WIDE ZP	4
6	114987	SCREW,SET,HX SKT,3/8-16X3/4	1
7	116100	WASHER 1-1/4 NAR FL ZP/CD	2
8	128874	BUMPER RUBBER 6X3X3-1/2	REF
9	129146	PIN HINGE BUMPER PIVOT	1
10	133458	PIN CYL ROD END	1
11	148028	LINK HYD FLIP AXLE	1
12	147883	TUBE,RECT4X2X3/16X77 NCH 4 S	REF
13	148811	MOUNT RUBBER BUMPER	1
14	150057	PIN HINGE HYD FLIP	1
15	150058	ROLLER HYD FLIP AXLE	2
16	150059	CLEVIS CYL FLIP AXLE	1
17	164435	VALVE COUNTERBALANCE 855	1
18	-----	G/N ASSY 835E 12’	REF
19	198733	FLIP WLDMT HYDR 800E-45	REF
20	199996	FRAME MOD WLDMT HYD FLIP BRKT	REF
21	2-573-010037	DECAL, DANGER, WING	1
22	200015	VALVE 3 GPM DUAL FLOW CONTROL	1
23	3-780-010002	TANK AIR 9.5X22.5 .5NPT PORTS	REF
24	758-181	VALVE TASK 4 PORT	REF

Eastern Wrecker Sales Inc

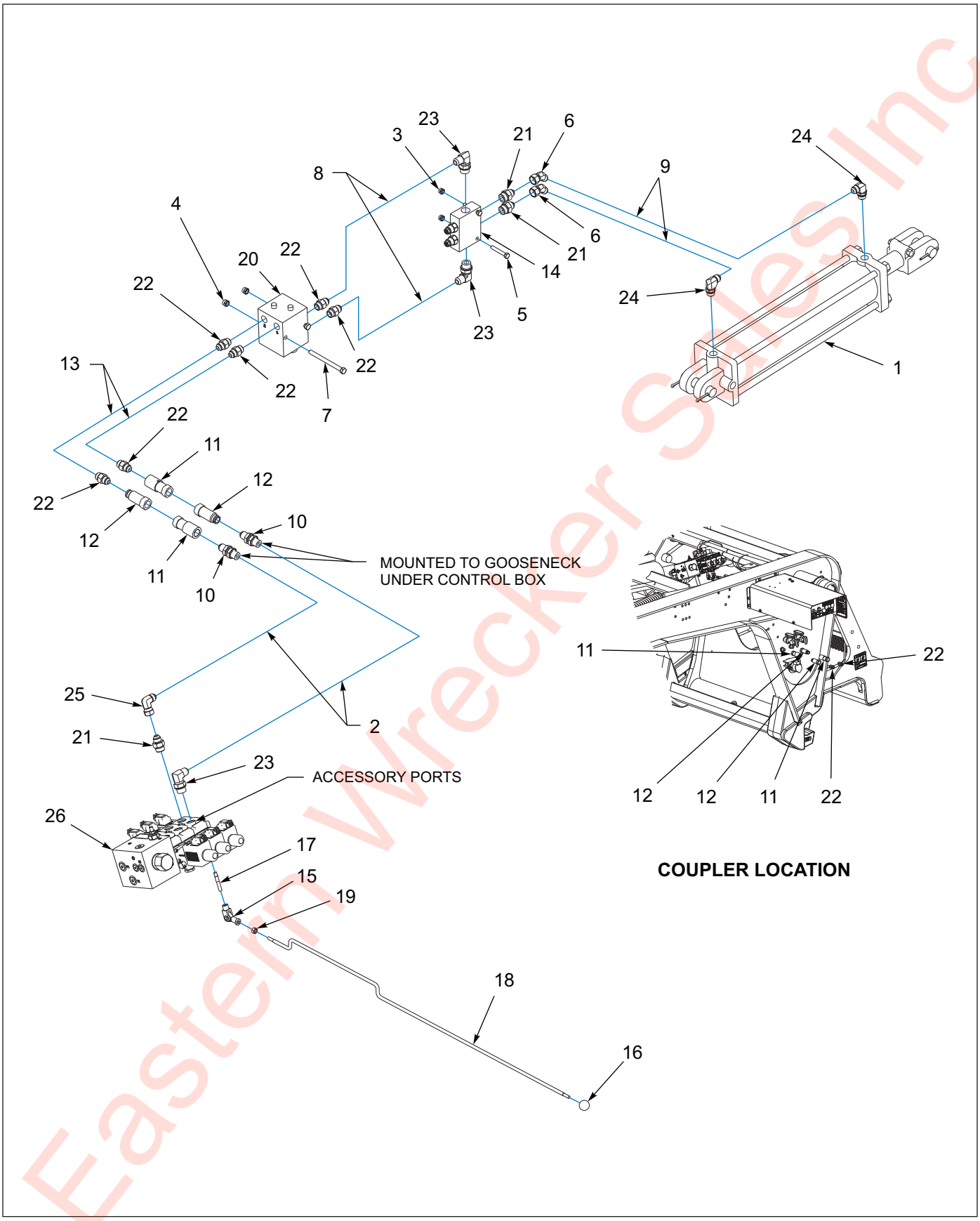

Figure 1-70: Hydraulic System

Eastern Wrecker Sales Inc

Hydraulic System

ITEM	PART NO.	DESCRIPTION	QTY.
	199995	PLUMBING FOR HYD FLIP "E"	
1	1-242-010180-3	CYLINDER,HYD 4X20STRK 3000PSI **(SEE PAGE 1-131)**	REF
2	1-397-010302064	HOSE ASSY,1/2X64,SAE 37STR-90	2
3	1-512-010005-03	NUT HEX SLFLKG GRB 5/16-18	2
4	1-512-010005-05	NUT, HEX, SLFLKG GRB 3/8-16	2
5	1-654-010049-09	SCREW,HEX CAP,5/16-18UNCX2GR5	2
6	121031	FITTING,45EL #8M X #8F 37SWVL	2
7	129698	SCREW,HXCP,3/8-16UNCX4-1/2GR5	2
8	147582	HOSE ASSY 3/8X24 #8 JIC SWIV	2
9	148036	HOSE ASSY 3/8X484 **(NOT SHOWN)**	2
10	148043	ADAPTER BLKHD #8 JIC #8 ORB	2
11	148044	COUPLER FLAT FACE FEMALE BODY	2
12	148045	COUPLER FLAT FACE MALE BODY	2
13	150083	HOSE ASSY 3/8X98 #8STR-#8-90	2
14	164435	VALVE COUNTERBALANCE 855	REF
15	186875	CLEVIS JOINT,ROD ENDS M8.1.25	1
16	186877	KNOB BLACK 1" ROUND M8X1.25THD	REF
17	193910	STUD M8-1.25X50MM DBLE THD	1
18	197610	ROD HANDLE M8X1.25 ENDS LONG	1
19	1DM8ER	NUT HEX HD M8X1.25 CL8.8	1
20	200015	VALVE 3 GPM DUAL FLOW CONTROL	REF
21	202702-10-8S	ADAPTER, #10 O-RING #8 TUBE	3
22	202702-8-8S	ADAPTER #8 O-RING TO #8 TUBE	6
23	2062-10-8S	ADAPTER,90, #10 O-RING-TUBE	3
24	2062-8-8S	ADAPTER, 90, #8 O-RING-TUBE	2
25	2071-8-8S	ADAPTER90 #8 FLR SWIVEL #8JIC	1
26	186885	VALVE, 3 SP, 35 GPM, SOLENOID **(SEE PAGE 1-35)**	1

Eastern Wrecker Sales Inc

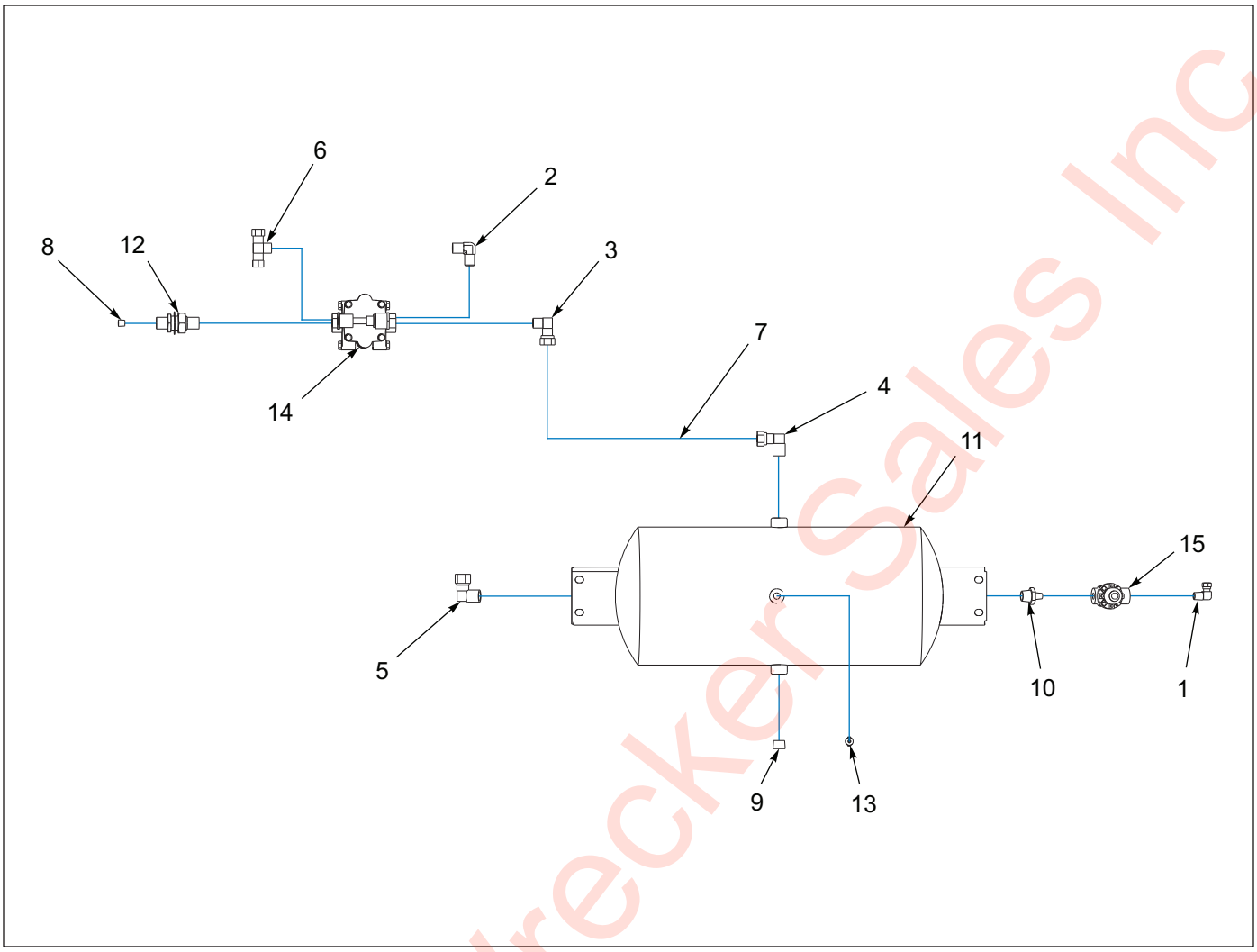

Figure 1-71: Air System

Air System

ITEM	PART NO.	DESCRIPTION	QTY.
	199993	FRAME MOD HYD FLIP PROVISION	
1	1-297-010008-07	FITTING AIR 90 1/4TUBEX1/4NPT	REF
2	1-297-010008-20	FITTING,AIR 90 3/8TUBEX3/8NPT	REF
3	1-297-010008-23	FITTING,AIR 90 1/2TUBEX3/8NPT	1
4	1-297-010008-24	FITTING,AIR 90 1/2TUBEX1/2NPT	1
5	1-297-010008-26	FITTING AIR 5/8TUBE X1/2NPT90	REF
6	1-297-010015-07	FITTING,AIR,BR TEE 3/8T-3/8P	REF
7	1-397-010302064	HOSE ASSY,1/2X64,SAE 37STR-90	REF
8	1-560-010002-02	PLUG, PIPE, 1/4NPT	1
9	1-560-010002-04	PLUG, PIPE, 1/2NPT	REF
10	2083-8-4S	NIPPLE HEX 1/2PIPE - 1/4PIPE	REF
11	3-780-010002	TANK AIR 9.5X22.5 .5NPT PORTS	REF
12	55B61	FRAME UNION	1
13	56D4	COCK,DRAIN AIR TANK VEL036019	REF
14	758-181	VALVE TASK 4 PORT	REF
15	905-54-107	BRAKE PROTECTION VALVE	REF

Eastern Wrecker Sales Inc

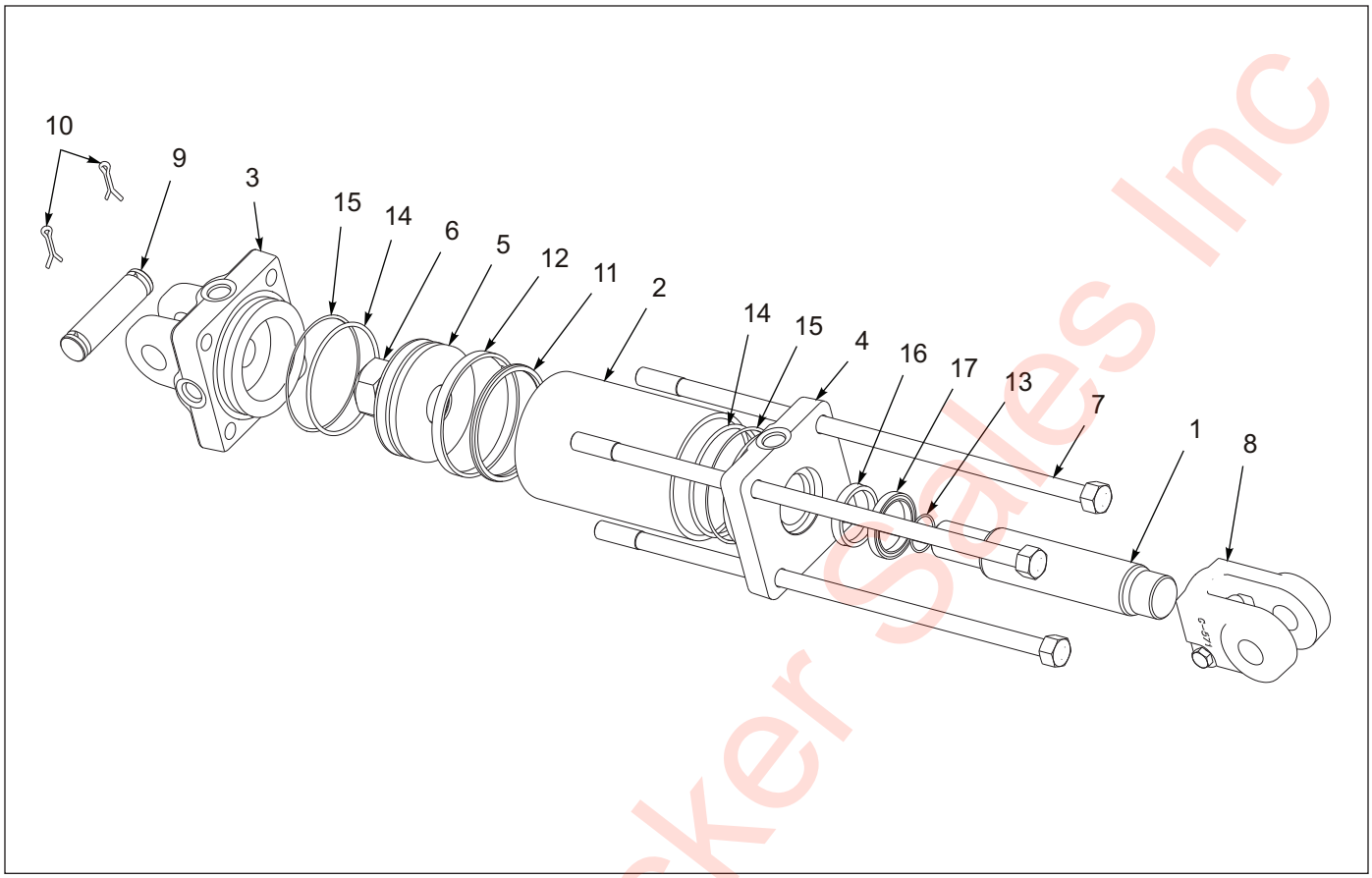

Figure 1-72: Hydraulic Cylinder - 4 X 20

Hydraulic Cylinder - 4 X 20

ITEM	PART NO.	DESCRIPTION	QTY.
	1-242-010180-3	CYLINDER, 4 X 20 HYDRAULIC	
1	147372	PISTON ROD	1
2	-----	TUBE	1
3	-----	BUTT	1
4	163045	GLAND	1
5	-----	PISTON	1
6	-----	LOCKNUT	1
7	-----	TIEROD ASSEMBLY	4
8	-----	CLEVIS ASSEMBLY	1
9	-----	CLEVIS PIN	2
10	-----	COTTER PIN	4
11	-----	CROWN SEAL	1
12	-----	BEARING RING	1
13	-----	O-RING	2
14	-----	O-RING	1
15	-----	BU-WASHER	2
16	-----	U-CUP	1
17	-----	WIPER	1
18	147377	PACKING KIT (ITEMS 11-17, NOT SHOWN)	REF

Eastern Wrecker Sales Inc

Bed Installations

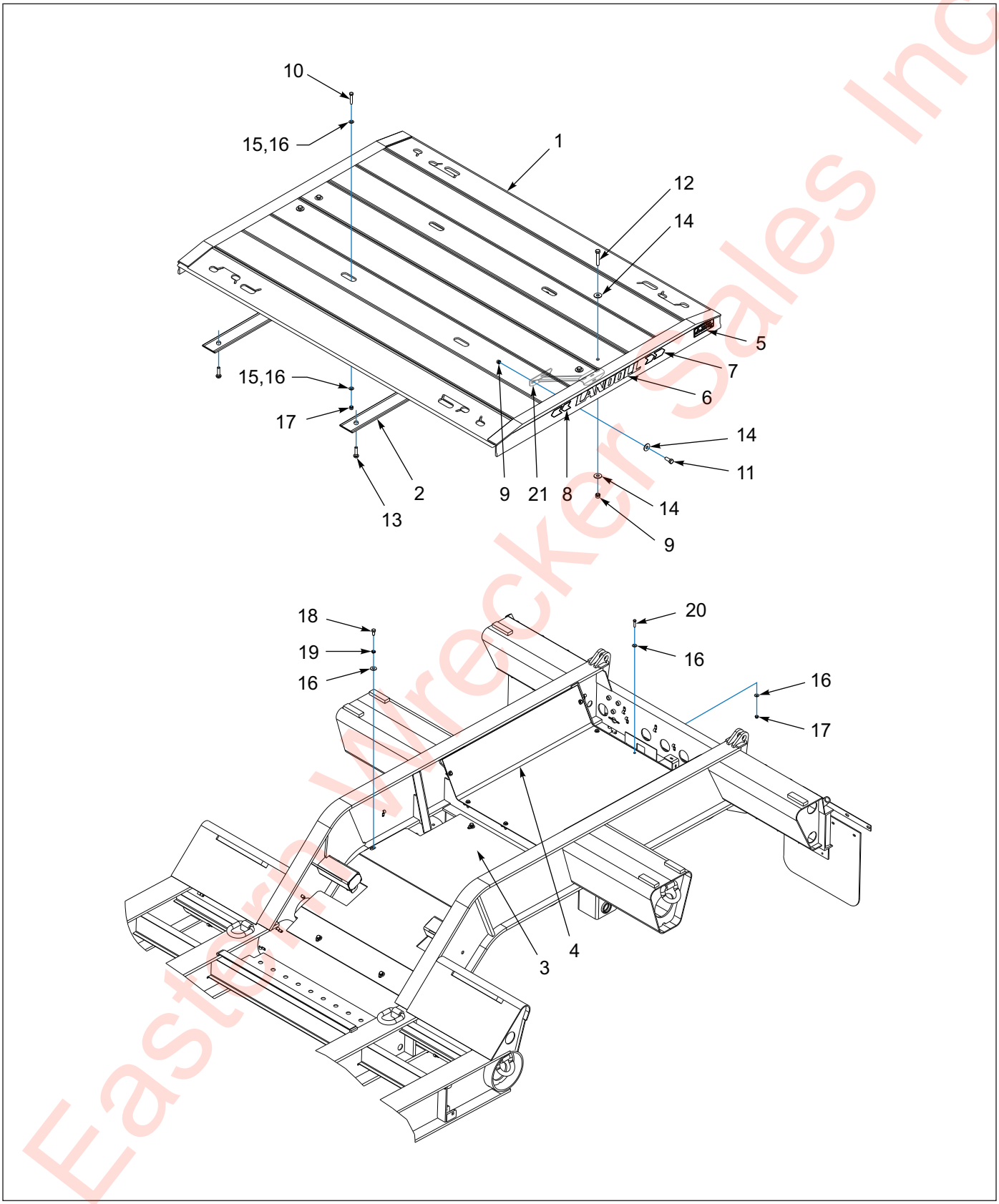

Figure 1-73: Bed Installation W/ Trunnion

Eastern Wrecker Sales Inc

Bed Installation W/ Trunnion

ITEM	PART NO.	DESCRIPTION	QTY.			
	199133	BED INSTL. ALUM. 2AX **(825E) (105193)**	*			
	196233	BED INSTL. ALUM. KH TRUN **(825E/835E) (174033)**	*			
	196232	BED INSTL. ALUM. TRUN **(825E) (131151)**	*			
	196236	BED INSTL. ALUM. 60” SPRD **(835E) (155064)**	*			
	196234	BED INSTL. ALUM. AG 3AX **(835E) (129312)**		*		
	196235	BED INSTL. ALUM. AG-SPRD **(835E) (129877)**		*		
	196237	BED INSTL. ALUM. 120-60” SPRD **(835E) (167361)**			*	
	196238	BED INSTL. ALUM. 120-3AX **(835E) (179019)**			*	
	196239	BED INSTL. ALUM. 120-3AX 54” **(835E) (180469)**			*	
	120675	TRUNNION COVER **(835E)**				*
1	105193	BED WLDMT. ALUM. 73-1/8” **(825E)**	AR	AR	AR	AR
1	174033	BED WLDMT. ALUM. KH TRUN 73-1/8” **(825E/835E)**	AR	AR	AR	AR
1	131151	BED WLDMT. ALUM. 73-1/8” **(825E)**	AR	AR	AR	AR
1	155064	BED WLDMT. ALUM. TRUN 83-3/8” **(835E)**	AR	AR	AR	AR
1	129312	BED WLDMT. ALUM. AG 3AX TRUN 73-1/8” **(835E)**	AR	AR	AR	AR
1	129877	BED WLDMT. ALUM. SPRD 145-1/8” **(835E)**	AR	AR	AR	AR
1	167631	BED WLDMT. ALUM. SPRD 120-60” **(835E, REF ONLY)**	AR	AR	AR	AR
1	179019	BED WLDMT. ALUM. 120-3AX 145-1/8” **(835E)**	AR	AR	AR	AR
1	180469	BED WLDMT. ALUM. 120-3AX-54” 135-3/32” **(835E)**	AR	AR	AR	AR
2	182070	BELT 4 X 72” **(199133, 196233, 196232)**	AR	AR	AR	AR
2	182073	BELT 4 X 120” **(196234, 196239)**	AR	AR	AR	AR
2	182074	BELT 4 X 138” **(196235, 196238)**	AR	AR	AR	AR
2	182091	BELT 4 X 81” **(196236, 196237)**	AR	AR	AR	AR
3	114723	COVER, TROUGH 835 FRONT	1	1	1	1
4	114724	COVER, TRUNNION FORMED	1	1	1	1
5	186009	DECAL 14,000 LB ALUM. BED	2	2	2	--
6	196167	DECAL, LANDOLL SMALL	2	2	2	--
7	196168	DECAL, ARROW SMALL 2 LH	2	2	2	--
8	196169	DECAL, ARROW SMALL 2 RH	2	2	2	--
9	1-512-010005-13	NUT, HEX, SLFLKG, 5-8-11 GRB	8	16	8,16	--
10	1-654-010055-07	SCREW, HEX, 1/2-13 X 2-1/2 GR5	4	4	4	--
11	1-654-010059-03	SCREW, HEX, 5/8-11 X 1-1/2 GR5	4	8	4,8	--
12	1-654-010059-11	SCREW, HEX, 5/8-11 X 3-1/2 GR5	4	8	4,8	--
13	107-0039	SCREW, SELF-TAP #10 X 3/4	4	4	4	--
14	1-861-010032-19	WASHER, FLAT, ZP/CD, 5/8W	12	24	12,24	--
15	1-861-010032-14	WASHER, FLAT 1/2	8	8	--	--
16	1-861-010032-15	WASHER, FLAT, ZP/C/D, 1/2W	--	--	8	24
17	1-512-010005-09	NUT, HEX, SLFLKG, 1/2-13 GRB	4	4	4	10
18	1-654-010055-01	SCREW, HEX HEAD CAP 1/2-13 X 1 GR5	--	--	--	6
19	1-861-010034-13	WASHER, FLAT 3/8 W	--	--	--	6
20	1-654-010055-04	SCREW, HEX, 1/2-13 X 1-3/4 GR5	--	--	--	10
21	180532	BRACE SUPPORT, BOLT ON ALUM DECK **(P/N 220314 GALVANIZED BRACE)**	2	4	2,4	--

Eastern Marker Sales Inc

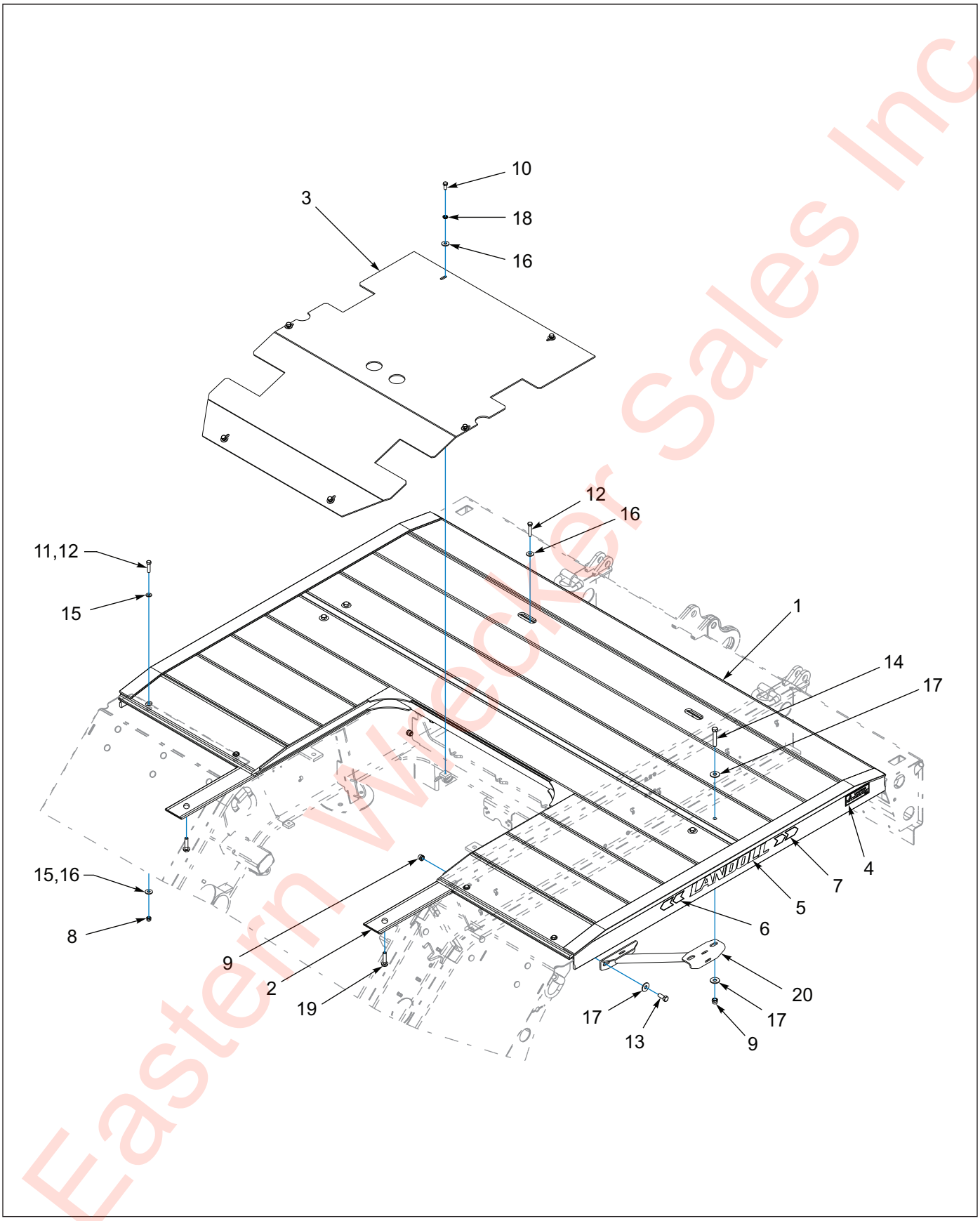

Figure 1-74: Bed Installation Weight Package W/ Trunnion

Eastern Wrecker Sales Inc

Bed Installation Weight Package W Trunnion

ITEM	PART NO.	DESCRIPTION	QTY.		
	199295	BED INSTL. ALUM. AG 3AX TRUN **(835E) (199291)**	*		
	196240	BED INSTL. ALUM. 120-2AX WP **(835E) (194363)**		*	
	196241	BED INSTL. ALUM. 120-3AX WP **(835E) (194369)**			*
1	199291	BED WLDMT. ALUM. 127-1/8” **(835E)**	1	--	--
1	194363	BED WLDMT. ALUM. 120 2AX WP 83-5/16” **(835E)**	--	1	--
1	194369	BED WLDMT. ALUM. 120-3AX WP 145-1/8” **(835E)**	--	--	1
2	182073	BELT 4 X 120”	2	--	--
2	182091	BELT 4 X 81”	--	2	--
2	182074	BELT 4 X 138”	--	--	2
3	114723	COVER, TROUGH 835 FT	1	--	--
3	167929	COVER, TROUGH 835 FT LIFT AXLE	1	--	--
3	198215	COVER, TROUGH 835 10’ WIDE	--	1	1
3	198216	COVER,TROUGH 835 FRT LIFT 10’ WIDE	--	--	1
4	186009	DECAL 14,000 LB ALUM. BED	2	2	2
5	196167	DECAL, LANDOLL SMALL	2	2	2
6	196168	DECAL, ARROW SMALL 2 LH	2	2	2
7	196169	DECAL, ARROW SMALL 2 RH	2	2	2
8	1-512-010005-09	NUT, HEX, SLFLKG, 1/2-13 GRB	6	6	6
9	1-512-010005-13	NUT, HEX, SLFLKG, 5-8-11 GRB	16	8	16
10	1-654-010055-01	SCREW, HEX HEAD CAP 1/2-13 X 1 GR5	6	6	6
11	1-654-010055-05	SCREW, HEX, 1/2-13 UNC X 2 GR5	--	4	4
12	1-654-010055-07	SCREW, HEX, 1/2-13 X 2-1/2 GR5	6	2	2
13	1-654-010059-03	SCREW, HEX, 5/8-11 X 1-1/2 GR5	8	4	8
14	1-654-010059-11	SCREW, HEX, 5/8-11 X 3-1/2 GR5	8	4	8
15	1-861-010032-14	WASHER, FLAT 1/2	12	4	4
16	1-861-010032-15	WASHER, FLAT, ZP/C/D, 1/2W	6	14	14
17	1-861-010032-19	WASHER, FLAT, ZP/CD, 5/8W	24	12	24
18	1-861-010034-13	WASHER, FLAT 3/8 W	6	6	6
19	107-0039	SCREW, SELF-TAP #10 X 3/4	4	4	4
20	180532	BRACE SUPPORT, BOLT ON ALUM DECK **(P/N 220314 GALVANIZED BRACE)**	4	2	4

Eastern Wholesale Sales Inc

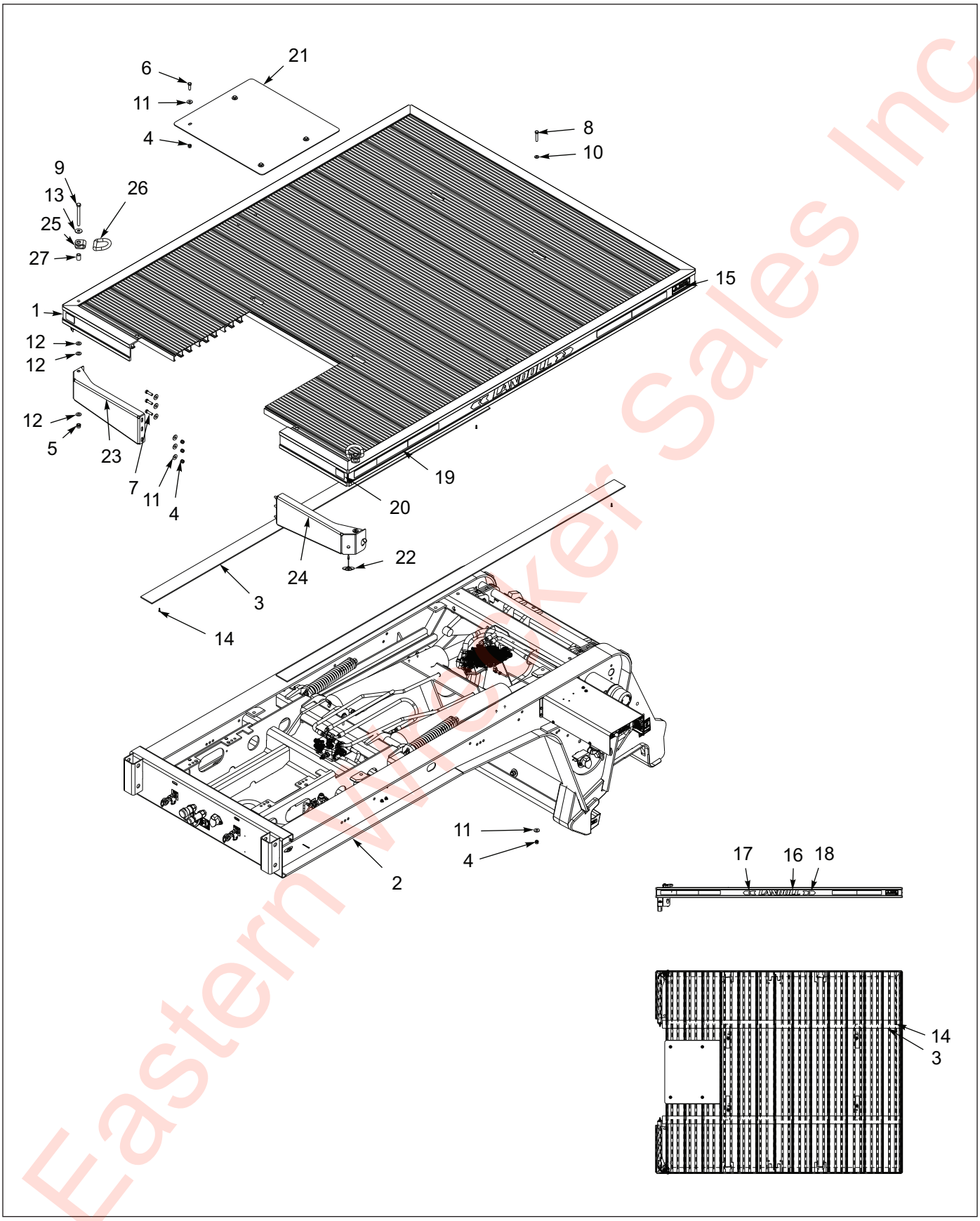

Figure 1-75: Bed Installation W/ Trunnion and Gooseneck

Eastern Wholesale Sales Inc

Bed Installation W/ Trunnion and Gooseneck

ITEM	PART NO.	DESCRIPTION	QTY.			
	199125	BED INSTL. ALUM. 12’ G/N **(835E)**	*			
	196242	BED INSTL. ALUM. 10’-9” G/N **(835E)**		*		
	199134	BED INSTL. ALUM. HD 12’ G/N **(835E/845E)**			*	
	196243	BED INSTL. ALUM. KH 12’ G/N **(835E)**				*
1	171910	BED WLDMT. ALUM. 835 AG G/N	1	--	--	--
1	174540	BED WLDMT. ALUM. 835 AG 10’-9”	--	1	--	--
1	179891	BED WLDMT. ALUM. 835 HD G/N	--	--	1	--
1	174031	BED WLDMT. ALUM. 825/835 KH G/N	--	--	--	1
2	-----	G/N ASSY 835E 12’	1	--	--	--
2	-----	G/N ASSY 835 10’-9”	--	1	--	--
2	-----	G/N ASSY 835/845 HD 12’	--	--	1	--
2	-----	G/N ASSY 835 12’	--	--	--	1
3	182073	BELT 4 X 120”	2	--	--	2
3	182090	BELT 4 X 108”	--	2	--	--
3	182072	BELT 4 X 110”	--	--	2	--
4	1-512-010005-09	NUT, HEX LOCK 1/2-13 GRB	14	14	14	14
5	1-512-010005-13	NUT, HEX LOCK 5/8-11 GRB	2	2	2	2
6	1-654-010055-03	SCREW, HEX 1/2-13 UNC X 1-1/2 GR5	4	4	4	4
7	1-654-010055-04	SCREW, HEX HEAD CAP 1/2-13 X 1-3/4 GR5	6	6	6	6
8	1-654-010055-07	SCREW, HEX HEAD CAP 1/2-13 X 2-1/2 GR5	4	4	4	4
9	1-654-010059-17	SCREW, HEX HEAD CAP 5/8-11 X 6 GR5	2	2	2	2
10	1-861-010032-14	WASHER, FLAT 1/2	4	4	4	4
11	1-861-010032-15	WASHER, FLAT 1/2W	20	20	20	20
12	1-861-010032-18	WASHER, FLAT 5/8N	6	6	6	6
13	1-861-010032-19	WASHER, FLAT 5/8W	2	2	2	2
14	107-0039	SCREW, SELF-TAP #10 X 3/4 TYPE B	4	4	4	4
15	186009	DECAL 14,000 LB ALUM. BED	2	2	2	2
16	196167	DECAL, LANDOLL SMALL	2	2	2	2
17	196168	DECAL, ARROW SMALL 2 LH	2	2	2	2
18	196169	DECAL, ARROW SMALL 2 RH	2	2	2	2
19	3-573-010377	DECAL, 2” REFLEXITE TAPE RD/WHT	108	120	108	120
20	202578	REFLEXTITE WHITE, 3”	2	2	2	2
21	171915	PLATE COVER, WINCH OPENING	1	1	1	1
22	187863	LIGHT, YELLOW LED, .75CL/MK CLEAR 2D	REF	REF	REF	REF
23	199123	SUPPORT WLDT. G/N BED RH	2	2	2	2
24	199124	SUPPORT WLDT. G/N BED LH	2	2	2	2
25	3-793-010018	3/4 D-RING SWIVEL	2	2	2	2
26	3-793-010044	D-RING	2	2	2	2
27	3-831-010050	TUBING 1”	2	2	2	2

Eastern Wrecker Sales Inc

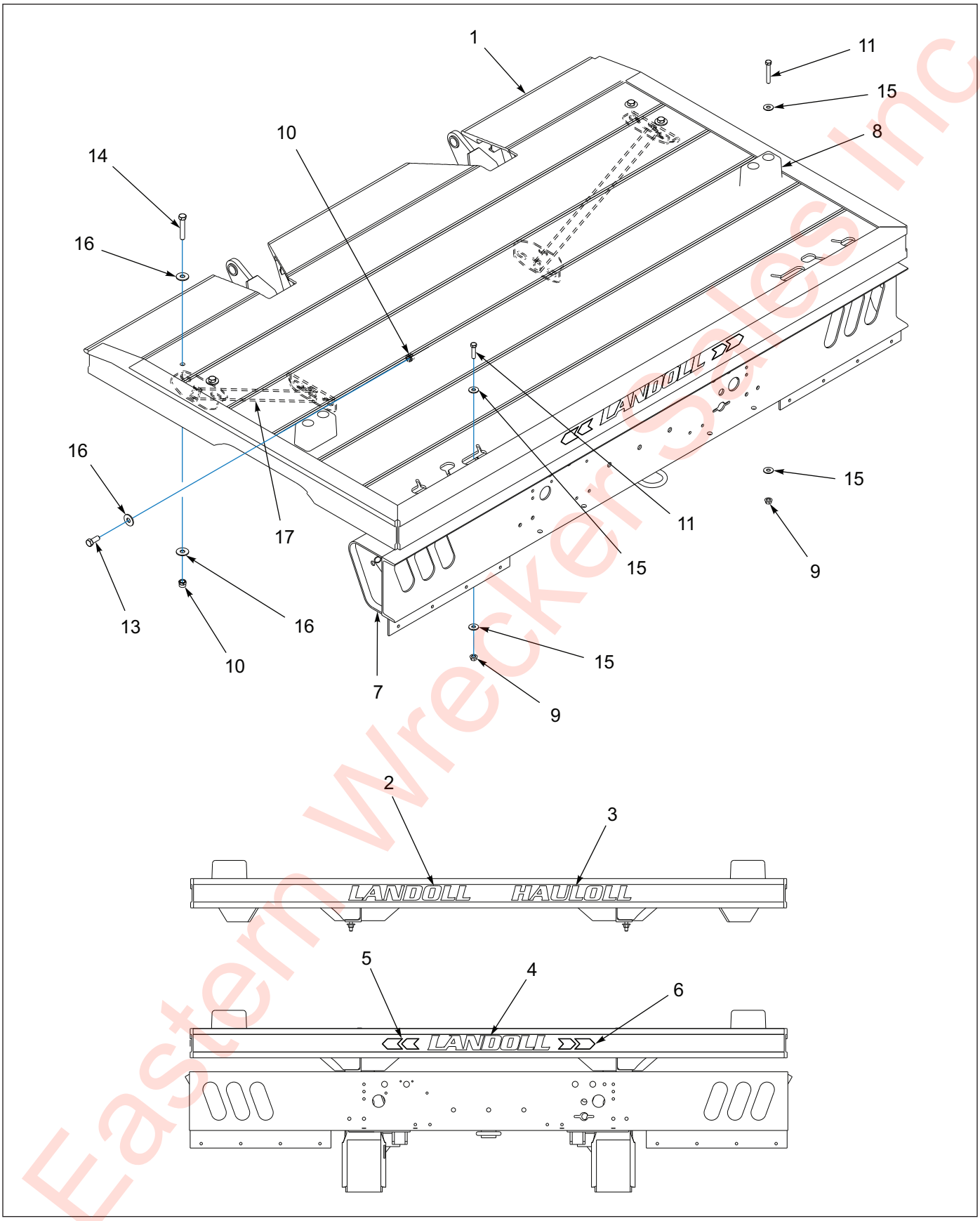

Figure 1-76: Bed Installation - Flip Axle

Eastern Wrecker Sales Inc

Bed Installation - Flip Axle

ITEM	PART NO.	DESCRIPTION	QTY.	
	199128	BED ASSY, 835E AG FLIP AXLE	*	
	199130	BED ASSY, 835E AG HYD FLIP AXLE	*	
	164399	BED ASSY, 835 AG FLIP AXLE		*
	183720	BED ASSY, 835 FLIP AXLE D-RING		*
	162408	BED ASSY, 835 AG HYD FLIP AXLE		*
	167367	BED ASSY, 835-120 HYD FLIP AXLE		*
	178403	BED ASSY, 835-120 HYD FLIP AXLE		*
	174034	BED ASSY, 835 KH HYD FLIP AXLE		*
1	130284	BED WLDMT. 835 FLIP AXLE **(USED W/ 199128)**	REF	REF
1	148890	BED WLDMT. 835 HYD FLIP AXLE **(USED W/ 199130)**	REF	REF
1	164398	BED WLDMT. 835 FLIP AXLE **(USED W/ 164399)**	REF	REF
1	183721	BED WLDMT. 835 FLIP AXLE, D-RING **(USED W/ 183720)**	REF	REF
1	162409	BED WLDMT. 835 HYD FLIP AXLE **(USED W/ 162408)**	REF	REF
1	167368	BED WLDMT. 835-120 HYD FLIP AXLE **(USED W/ 167367)**	REF	REF
1	178404	BED WLDMT. 835-120 HYD FLIP AXLE **(USED W/ 178403)**	REF	REF
1	174035	BED WLDMT. 835 HYD FLIP AXLE **(USED W/ 174034)**	REF	REF
2	155273	DECAL, LANDOLL (BLACK)	--	1
3	155274	DECAL, HAULOLL (BLACK)	--	1
4	196167	DECAL, LANDOLL SMALL	1	--
5	196168	DECAL, ARROW SMALL 2 LH	1	--
6	196169	DECAL, ARROW SMALL 2 RH	1	--
7	198706	FLIP WLDMT. 835E W/ BUSHING **(USED W/ 199128, 199130, 178403)**	REF	REF
7	164393	FLIP WLDMT. 835 W/ BUSHING **(USED W/ 164399)**	REF	REF
7	155036	FLIP WLDMT. 835 W/ BUSHING **(USED W/ 183720)**	REF	REF
7	148072	FLIP MOD WLDMT. HYD FLIP BRKT **(USED W/ 199130, 162408, 174034)**	REF	REF
7	164821	FLIP MOD WLDMT. HYD FLIP120 BRKT **(USED W/ 167367)**	REF	REF
8	128874	BUMPER, RUBBER 6 X 3 X 3-1/2	REF	REF
9	1-510-010003-09	NUT, FLANGE HEAD SERRATED, 1/2-13	4	4
10	1-512-010005-13	NUT, HEX LOCK 5/8-11 GRB	8	8
11	1-654-010055-05	SCREW, HEX HEAD CAP 1/2-13 X 2 GR5	4	4
12	1-654-010055-10	SCREW, HEX HEAD CAP 1/2-13 X 3-1/4 GR5	REF	REF
13	1-654-010059-03	SCREW, HEX 5/8-11 UNC X 1-1/2 GR5	4	4
14	1-654-010059-11	SCREW, HEX 5/8-11 UNC X 3-1/2 GR5	4	4
15	1-861-010032-15	WASHER, FLAT 1/2W	8	8
16	1-861-010032-19	WASHER, FLAT 5/8W	12	12
17	180532	BRACE SUPPORT, BOLT ON ALUM DECK **(P/N 220314 GALVANIZED BRACE)**	2	2

Eastern Wrecker Sales Inc

Pullout Extensions

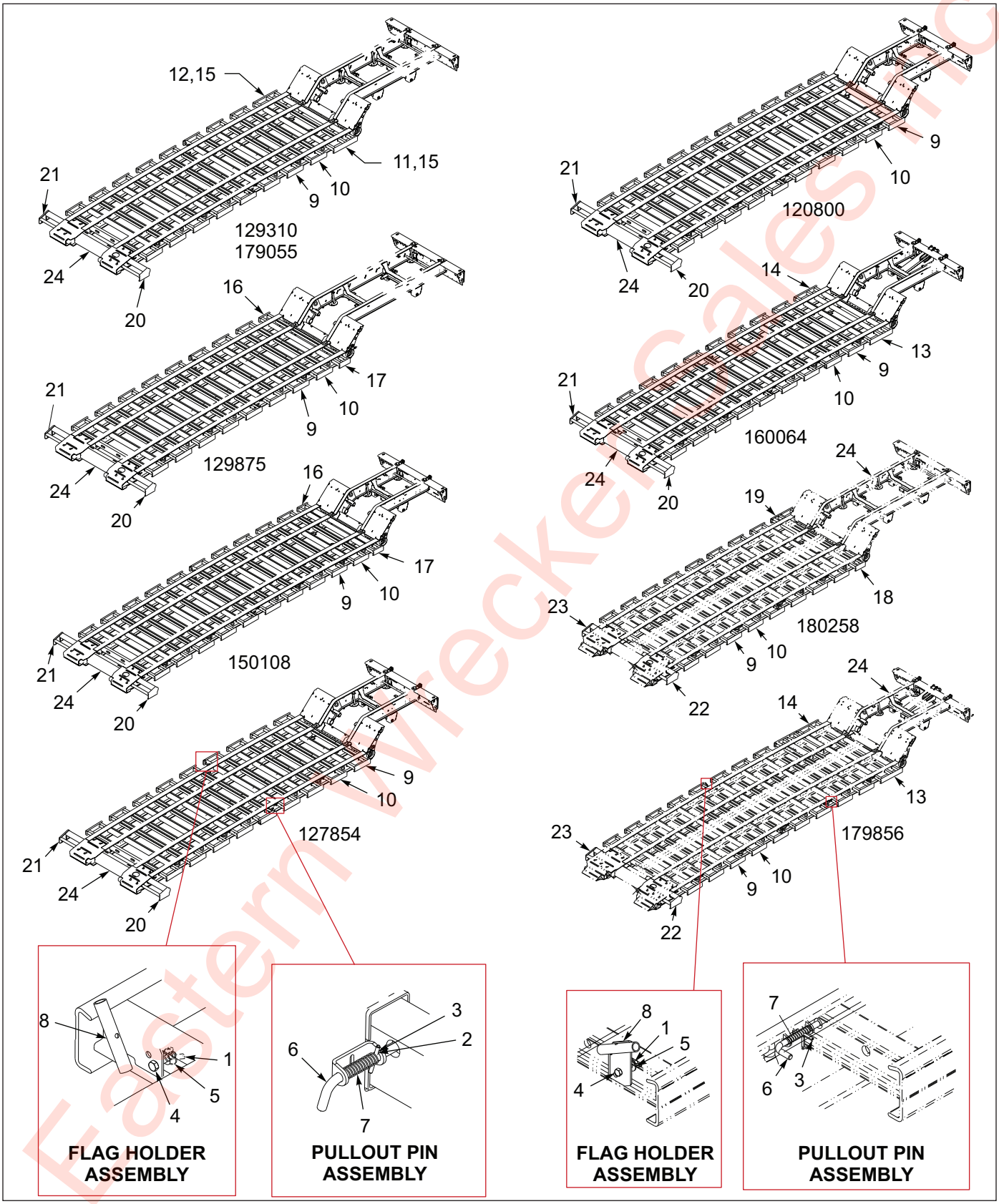

Figure 1-77: Pullout Extension Installation

Eastern Wrecker Sales Inc

Pullout Extension Installation

ITEM	PART NO.	DESCRIPTION	QTY.							
	120800	PULLOUT EXT INSTL 835-30	*							
	127854	PULLOUT EXT INSTL 835		*						
	129310	PULLOUT EXT INSTL 835AG-R 27			*					
	129875	PULLOUT EXT INST835-S-26/R-26				*				
	150108	PULLOUT EXT INSTL 835-32					*			
	179856	PULLOUT EXT INSTL 835-31 HD						*		
	180258	PULLOUT EXT INSTL 835-26HD							*	
	179055	PULLOUT EXT INSTL 835-27CANADA								*
1	1-533-010001	1/2-13 WING NUT 20 TYPE A	2	2	2	2	2	2	2	2
2	1-647-010004117	SPRING PIN,SLOTTED 1/8X1	--	20	20	20	--	--	--	20
3	1-647-010004181	SPRING PIN SLOTTED TYPE3/16X2	22	--	--	--	24	22	20	--
4	1-654-010055-07	SCREW HX CP 1/2-13UNCX2-1/2	2	2	2	2	2	2	2	2
5	1-861-010032-15	WASHER, FLAT 1/2 W ZP/CD	2	2	2	2	2	2	2	2
6	104252	PIN P/O EXT LOCK	22	20	20	20	24	22	20	20
7	104253	SPRING,COMPRESSION P/OEXTLOCK	22	20	20	20	24	22	20	20
8	108859	WLDMT, BRACKET, FLAG HOLDER	2	2	2	2	2	2	2	2
9	112598	PULL-OUT ASSY,RH	10	9	8	8	10	9	8	8
10	112599	PULL-OUT ASSY, LH	10	9	8	8	10	9	8	8
11	112621	EXTENSION WLD P/O RR RH 825-28	--	--	1	--	--	--	--	--
12	113026	EXTENSION WLD P/O RR LH 825-28	--	--	1	--	--	--	--	--
13	160065	EXT P/O REAR LH 835-30	--	--	--	--	--	1	--	--
14	160666	SQ TUBE, DEPTH STOP 132	--	--	--	--	--	1	--	--
15	179056	EXTENSION WLDMT P/OREAR835-27C	--	--	--	--	--	--	--	2
16	128711	PULL-OUT WLDMT, LH, 10	--	--	--	1	1	--	--	--
17	128712	PULL-OUT WLDMT, RH, 10	--	--	--	1	1	--	--	--
18	180259	PULL-OUT WLDMT, LH, 9	--	--	--	--	--	--	1	--
19	180260	PULL-OUT WLDMT, RH, 9	--	--	--	--	--	--	1	--
20	128797	PULLOUT WLDMT STL FRT 835AG LH	1	1	1	1	1	--	--	1
21	128798	PULLOUT WLDMT STL FRT 835AG RH	1	1	1	1	1	--	--	1
22	179857	PULLOUT STL FT 835AG HD LH WLD	--	--	--	--	--	1	1	--
23	179858	PULLOUT STL FT 835AG HD RH WLD	--	--	--	--	--	1	1	--
24	120819	FRAME WLDMT 835-30 P/O	1	--	--	--	--	--	--	--
24	127844	FRAME WLDMT 835-27 P/O	--	1	--	--	--	--	--	--
24	129293	FRAME WLDMT 835AG-R-27 P/O	--	--	1	--	--	--	--	1
24	129874	FRAME WLDMT 835AG-S-26	--	--	--	1	--	--	--	--
24	150095	FRAME WLDMT 835-32 P/O	--	--	--	--	1	--	--	--
24	160048	FRAME WLDMT 835-31 P/O HFP	--	--	--	--	--	--	--	--
24	178453	FRAME WLDMT HD 835-31-120 P/O	--	--	--	--	--	1	--	--
24	180243	FRAME WLDMT HD835E-R27-102	--	--	--	--	--	--	1	--

Eastern Wrecker Sales Inc

Swingout Installation

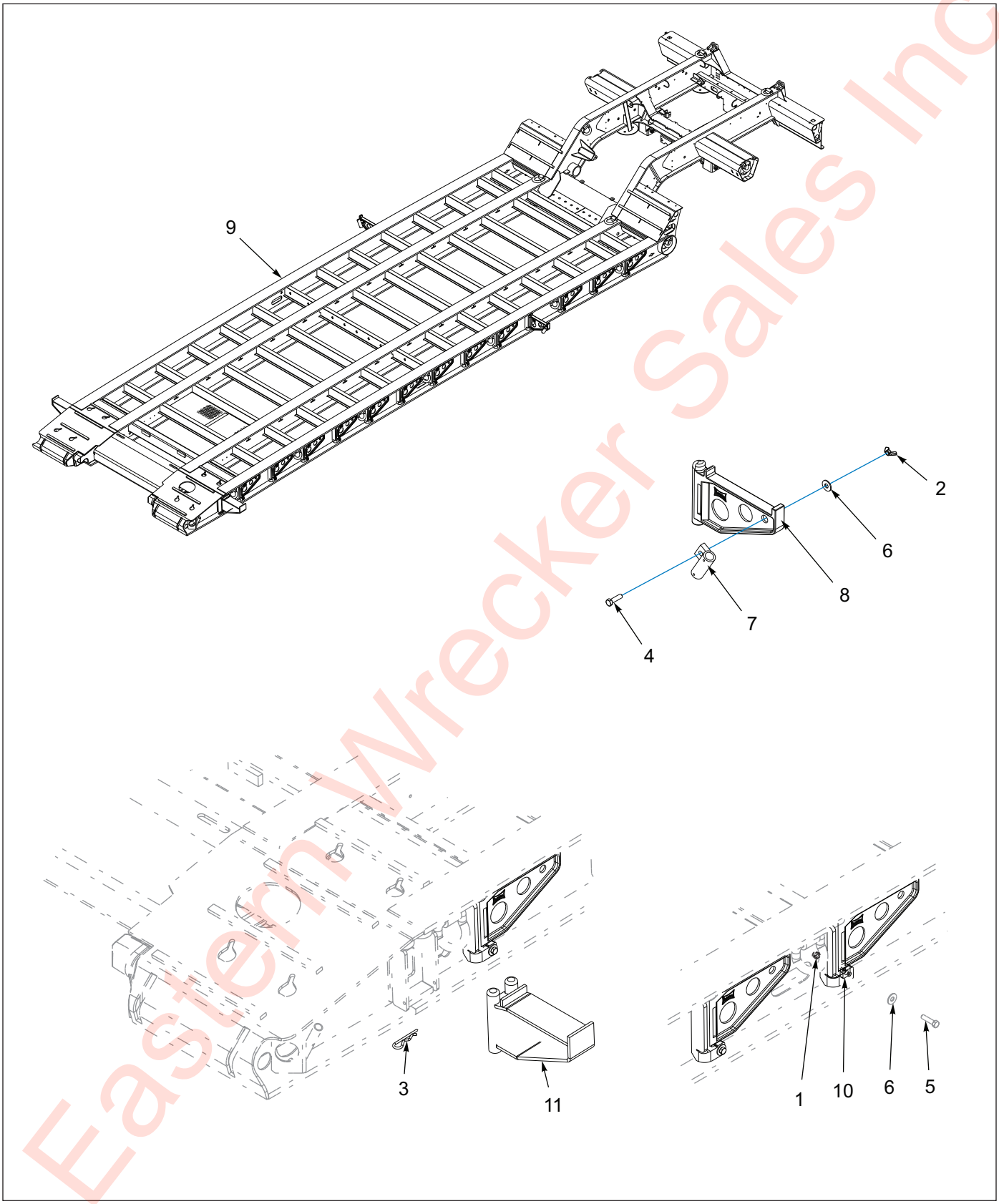

Figure 1-78: Swingout Installation

Eastern Wrecker Sales Inc

Swingout Installation

ITEM	PART NO.	DESCRIPTION	QTY.			
	184237	SWINGOUT O/R 835-23 CON	*			
	172600	SWINGOUT O/R 835-27-CON		*		
	172614	SWINGOUT O/R 835-32-CON			*	
	168043	SWINGOUT O/R 835-30-CON				*
1	1-512-010005-09	NUT,HEX,SLFLKG, 1/2-13 GRB	26	30	36	34
2	1-533-010001	1/2-13 WING NUT 20 TYPE A	2	2	2	2
3	1-557-010014	PIN, HAIR 1/4 DIA	2	2	2	2
4	1-654-010055-04	SCREW,HEX CAP,1/2-13UNCX1-3/4	2	2	2	2
5	1-654-010055-05	SCREW,HEX CAP,1/2-13UNCX2 GR5	26	30	36	34
6	1-861-010032-15	WASHER, FLAT 1/2 W ZP/CD	28	32	38	36
7	114741	HOLDER FLAG WLDMT	2	2	2	2
8	167-0022	OUTRIGGER FOR 10 CHANNEL	26	30	36	34
9	182094	FRAME WLDMT 835-23 CON	REF	--	--	--
9	172588	FRAME WLDMT 835-27 CON	--	REF	--	--
9	167420	FRAME WLDMT 835-32-CON	--	--	REF	--
9	167878	FRAME WLDMT 835-30 CON	--	--	--	REF
10	184390	STOP BLOCK O/R 835	26	30	36	34
11	3-311-015001	OUTRIGGER WLDMT FRONT	2	2	2	2

Eastern Wrecker Sales Inc

Winches

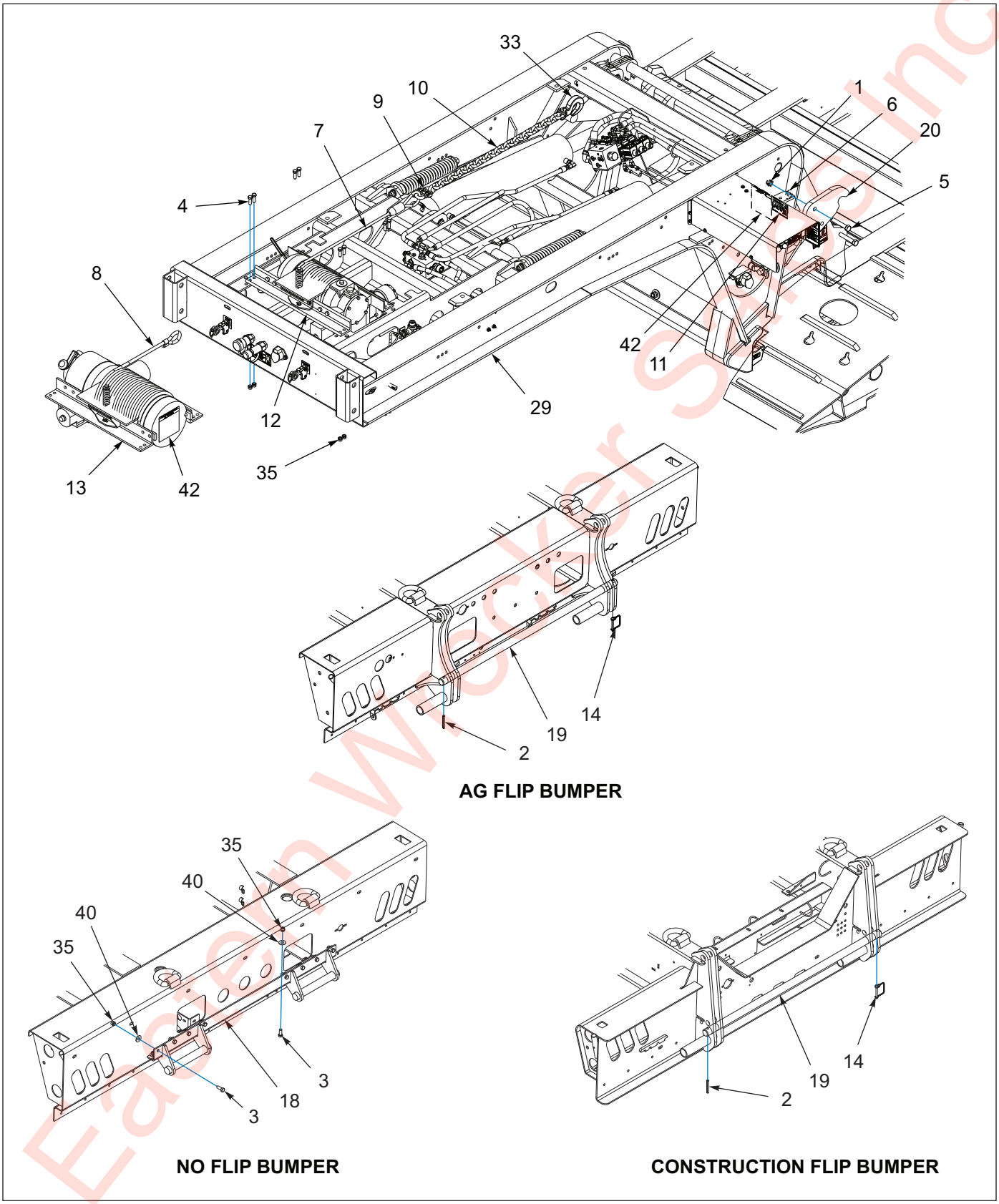

Figure 1-79: Winch Installation - 12K & 20K (BRADEN) (1 of 2)

Eaglen Wrecker Sales Inc

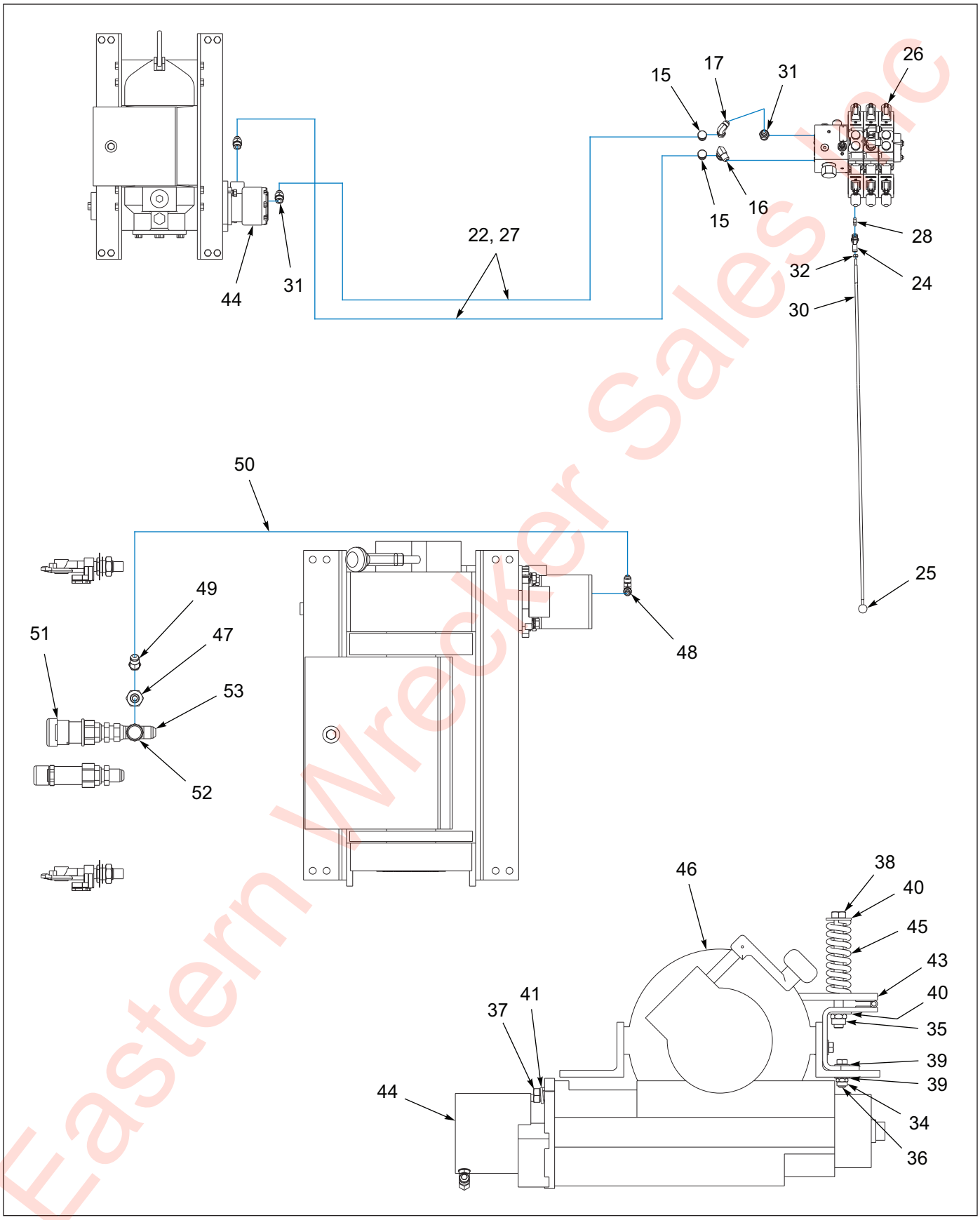

Figure 1-80: Winch Installation - 12K & 20K (BRADEN) (2 of 2)

Eastern Wrecker Sales Inc

Winch Installation - 12K & 20K (BRADEN)

ITEM	PART NO.	DESCRIPTION	QTY.				
	199211	WINCH INSTL12K BRAD E-G/N N/FL	*				
	199212	WINCH INSTL20K BRAD E-G/N N/FL		*			
	199213	WINCH INSTL12K BRAD E-G/N FLIP			*		
	199214	WINCH INSTL20K BRAD E-G/N FLIP				*	
	199215	WINCH ARC 20K BRAD E-G/N N/FL					*
1	1-512-010005-15	NUT,HEX,SLFLKG GRB 3/4-10	4	4	4	4	4
2	1-647-010004259	SPRING PIN, SLOTTED 3/8X3	--	--	1	1	--
3	1-654-010055-02	SCREW 1/2-13UNCX1-1/4 CP GR5	12	12	--	--	12
4	1-654-010055-03	SCREW,HEX CAP,1/2-13UNCX1-1/2	8	8	8	8	8
5	1-654-010061-13	SCREW,HX CP 3/4-10UNCX4 GR5	4	4	4	4	4
6	1-861-010032-21	WASHER, FLAT 3/4 W ZP/CD	4	4	4	4	4
7	3-155-010017-4	CABLE 1/2 W/LOOP 85FT	REF	--	REF	--	--
8	3-155-010018-6	CABLE 5/8 W/LOOP 85FT	--	REF	--	REF	REF
9	3-174-010038	CHAIN LINK CONNECTING 1/2	1	1	1	1	1
10	3-174-010039036	CHAIN 1/2X36" GRD 7 21LINKS	1	1	1	1	1
11	3-573-010299	DECAL, WARNING WINCH CABLE	1	1	1	1	1
12	3-873-010126-2	WINCH ASSY,12,000 LB **(ITEMS 34-46)**	1	--	1	--	--
13	3-873-010129-2	WINCH ASSY, 20000 LB **(ITEMS 34-46)**	--	1	--	1	1
14	516-22PTL	RETAINING PIN MUD FLAP	--	--	1	1	--
15	620-0887	FTG,PLUG #10 MALE O-RING BOSS	2	2	2	2	2
16	2062-10-8S	ADAPTER,90, #10 O-RING-TUBE	1	1	1	1	1
17	2071-8-8S	ADAPTER90 #8 FLR SWIVEL #8JIC	1	1	1	1	1
18	105195	ANCHOR WLDMT	1	1	--	--	1
19	130536	PIN HOOK ANCHOR 835AG WINCH	--	--	1	1	--
20	168528	PLATE WINCH HOOK 800	2	2	2	2	2
21	171915	PLATE COVER WINCH OPENING **(NOT SHOWN)**	1	1	1	1	1
22	173519	HOSE ASSY 1/2X124 SAE37 STR90	2	2	2	2	--
23	178444	BUSHING NYLON INSERT 9/16ID **(NOT SHOWN)**	1	1	1	1	1
24	186875	CLEVIS JOINT,ROD ENDS M8.1.25	1	1	1	1	1
25	186877	KNOB BLACK 1" ROUND M8X1.25THD	1	1	1	1	1
26	186885	VALVE, 3 SP, 35 GPM, SOLENOID **(SEE PAGE 1-35)**	REF	REF	REF	REF	REF
27	192172	HOSE ARCTIC 1/2X124 JIC STR	--	--	--	--	2
28	193910	STUD M8-1.25X50MM DBLE THD	1	1	1	1	1
29	197596	GOOSENECK WLDMT 835E-12'	REF	REF	REF	REF	REF
30	197610	ROD HANDLE M8X1.25 ENDS LONG	1	1	1	1	1
31	202702-10-8S	ADAPTER, #10 O-RING #8 TUBE	3	3	3	3	3
32	1DM8ER	NUT HEX HD M8X1.25 CL8.8	1	1	1	1	1
33	7HCGHT500	HOOK CLEVIS GRAB 1/2 GR70	1	1	1	1	1
34	1-512-010005-05	NUT, HEX, SLFLKG GRB 3/8-16	3	3	3	3	3
35	1-512-010005-09	NUT,HEX,SLFLKG, 1/2-13 GRB	21	21	21	21	21
36	1-654-010051-06	SCREW,HEX CAP 3/8-16UNCX1-1/4	3	3	3	3	3
37	1-654-010055-04	SCREW,HEX CAP,1/2-13UNCX1-3/4	2	2	2	2	2
38	1-654-010055-16	SCREW HEX CAP 1/2-13X5-1/2GR5 **(12K)**	1	1	1	1	1
38	1-654-010055-17	SCREW,HEX CAP,1/2-13UNCX6 GR5 **(20K)**	1	1	1	1	1
39	1-861-010032-10	WASHER, FLAT 3/8" N ZP/CD	6	6	6	6	6
40	1-861-010032-15	WASHER, FLAT 1/2 W ZP/CD	14	14	2	2	14
41	1-861-010034-13	WASHER, LKG HLCL SPR, 1/2	2	2	2	2	2
42	100600	DECAL WARNING BRADEN WINCH	1	1	1	1	1
43	3-873-010124	WINCH TENSIONER WLDMT 12K	1	1	1	1	1

Fraser Wrecker Sales Inc

Winch Installation - 12K & 20K (BRADEN)

ITEM	PART NO.	DESCRIPTION	QTY.				
43	102186	WINCH TENS 20K BRADEN SPRG WLD	1	1	1	1	1
44	3-481-010006	MOTOR,HYD 12,000LBS **(SEE PAGE 1-155)**	1	1	1	1	1
44	3-481-010007	MOTOR,HYD 20,000LBS **(SEE PAGE 1-155)**	1	1	1	1	1
45	3-720-010010	SPRING COMP LEVEL WIND	1	1	1	1	1
46	3-873-010122	WINCH, WORM GEAR 12,000 LB **(SEE PAGE 1-148)**	1	1	1	1	1
46	3-873-010123	WINCH, WORM GEAR, 20,000 LB **(SEE PAGE 1-152)**	1	1	1	1	1
47	102-1112	REDUCER 12X8 JIC	1	1	1	1	1
48	102-1238	ADAPTER,90-#4 O-RING/#6 JIC	1	1	1	1	1
49	121031	FITTING,45EL #8M X #8F 37SWVL	1	1	1	1	1
50	125659	HOSE ASSY,3/8X48,#6JICX#8JIC	1	1	1	1	1
51	143163	CONNECTORS FRONT SUB ASSY	REF	REF	REF	REF	REF
52	210292-12S	JIC CAP NUT #12	1	1	1	1	1
53	203102-12-12S	ADAPTER,TEE, #12, SAE37 SWIVL	1	1	1	1	1

Eastern Wrecker Sales Inc

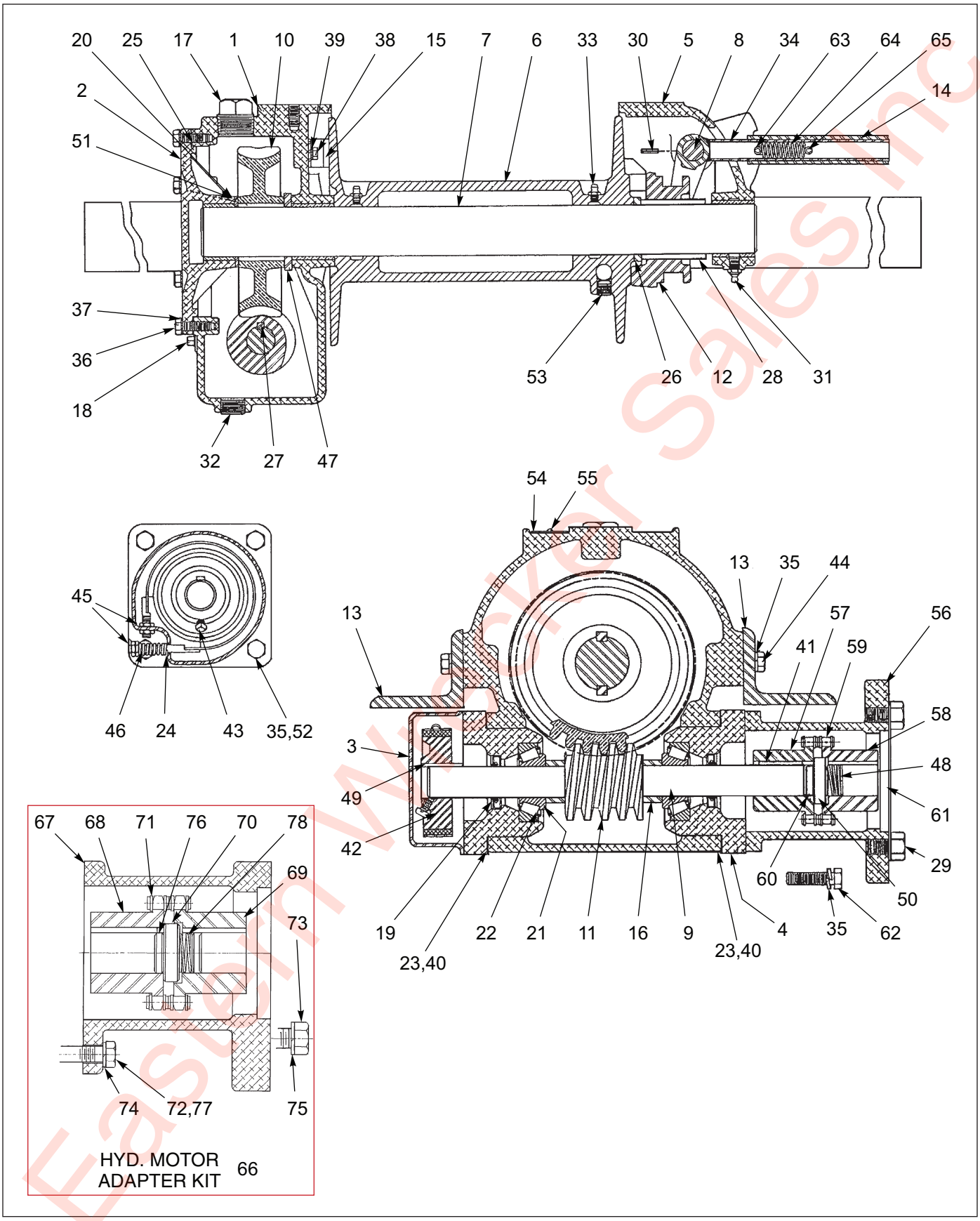

Figure 1-81: Winch Items - 12,000 Lb. (BRADEN)

Eastern Wrecker Sales Inc

Winch Items - 12,000 Lb. (BRADEN)

ITEM	PART NO.	DESCRIPTION	QTY.
	3-873-010122	WINCH ASSEMBLY 12K - BRADEN	
1	81006	WORM HOUSING ASSEMBLY	1
1	18078	BUSHING	1
2	81009	COVER ASSEMBLY WORM HOUSING	1
2	11368	BUSHING	1
3	18032	HOUSING SAFETY BRAKE	1
4	23303	CONTAINER BEARING	2
5	81530	LEG ASSEMBLY BEARING	1
6	11128	DRUM CABLE	1
7	11129	DRUM SHAFT CABLE	1
8	11130	SHIFTER SHAFT	1
9	23470	SHAFT WORM	1
10	11144	GEAR WORM LEFT HAND	1
11	11142	WORM LEFT HAND	1
12	18039	SLIDING CLUTCH	1
13	22752	ANGLE BASE	2
14	12817	SHIFTER HANDLE	1
15	81025	BRAKE DRAG	1
16	11308	SPACER WORM	2
17	----	PLUG PIPE	1
18	18009	PLUG PIPE	1
19	18026	SEAL GREASE	2
20	11117	KEY WORM GEAR	2
21	18015	CONE BEARING	2
22	18016	CUP BEARING	2
23	18027	GASKET	3
24	21925	BAND BRAKE	1
25	11133	WORM HOUSING COVER GASKET	3
26	18019	RETAINER RING	1
27	18030	KEY WORM	1
28	18020	KEY CLUTCH	2
29	----	CAPSCREW	2
30	11837	ROLLPIN	2
31	18047	FITTING GREASE	1
32	19045	PLUG PIPE	1
33	----	FITTING GREASE	2
34	13839	SHIFTER FORK	1
35	----	WASHER LOCK	16
36	----	CAPSCREW	6
37	----	WASHER LOCK	6
38	13005	CAPSCREW	2
39	----	WASHER LOCK	2
40	18024	BEARING CONTAINER GASKET	3
41	18044	KEY	1
42	18028	DRUM BRAKE	1
43	12075	SETSCREW	1
44	----	CAPSCREW	12
45	13468	JAM NUT	4
46	18029	BRAKE BAND SPRING	1

Eastern Wrecker Sales Inc

Winch Items - 12,000 Lb. (BRADEN)

ITEM	PART NO.	DESCRIPTION	QTY.
47	11240	RETAINER RING	1
48	----	SPRING	1
49	10078	KEY	1
50	23078	SPACER	1
51	13680	THRUST RING	1
52	----	CAPSCREW	4
53	218058	SETSCREW	1
54	----	WARNING PLATE	1
55	----	DRIVE SCREW	2
56	23079	MOTOR ADAPTER	1
57	23081	COUPLING HALF - WORM SHAFT	1
58	23083	COUPLING HALF - MOTOR SHAFT	1
59	13424	ROLLER CHAIN	1
60	23085	SPACER	1
61	----	SHIPPING COVER	1
62	----	CAPSCREW	4
63	13028	ROLLPIN	1
64	18002	SPRING	1
65	18056	ROLLPIN	1
66	61333	HYD. MOTOR ADAPTER KIT, 12,000# WINCH **(ITEMS 67-78)**	1
67	23079	ADAPTER, MOTOR	1
68	23081	COUPLING HALF, WINCH	1
69	23083	COUPLING HALF, MOTOR	1
70	23078	SPACER, CONSTANT	1
71	13424	CHAIN ROLLER	1
72	----	CAPSCREW	4
73	----	CAPSCREW	4
74	----	LOCKWASHER	4
75	----	LOCKWASHER	4
76	----	SPACER	1
77	----	CAPSCREW	4
78	110452	SPRING SPACER	1

Eastern Wrecker Sales Inc

Table provided for general use.

NOTES:

Eastern Wrecker Sales Inc

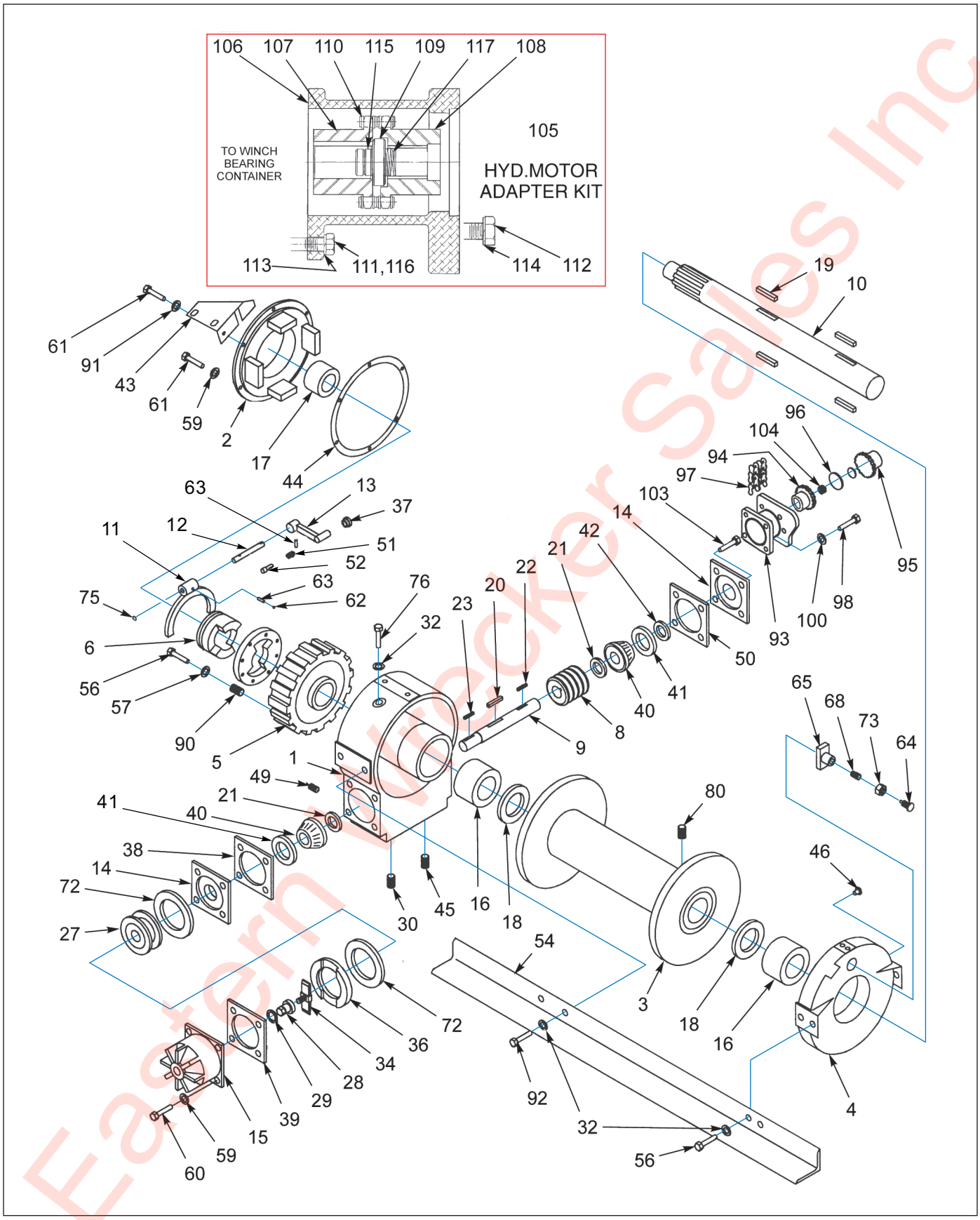

Figure 1-82: Winch Items - 20,000 Lb. (BRADEN)

Eastern Wrecker Sales Inc

Winch Items - 20,000 Lb. (BRADEN)

ITEM	PART NO.	DESCRIPTION	QTY.
	3-873-010123	WINCH 20,000# W/BOLT-ON ANGLES	
1	81078	WORM HOUSING ASSEMBLY	1
2	106956	COVER ASSEMBLY WORM HOUSING	1
3	----	DRUM CABLE	1
4	81077	LEG ASSEMBLY BEARING	1
5	11434	WORM, GEAR RIGHT	1
6	11421	CLUTCH, SLIDING	1
7	11419	DRIVE, CLUTCH	1
8	154166	WORM RIGHT	1
9	----	SHAFT, WORM	1
10	139479	SHAFT, CABLE DRUM	1
11	11440	FORK SHIFTER	1
12	11441	SHAFT SHIFTER	1
13	26976	HANDLE SHIFTER	1
14	124549	CONTAINER BEARING	2
15	----	COVER WORM BRAKE	1
16	18035	BUSHING	2
17	11425	BUSHING	1
18	11420	RING, RETAINING	2
19	163472	DRUM, KEY CABLE	4
20	11402	KEY, WORM	1
21	11407	SPACER, WORM	2
22	23367	KEY, SPROCKET	1
23	10078	KEY, ROTOR	1
27	81080	ROTOR ASSEMBLY, BRAKE	1
28	11599	ADJUSTING NUT, WORM BRAKE	1
29	12465	O-RING	1
30	----	PLUG, FILLER	1
32	----	WASHER, LOCK	10
34	81081	SPRING ASSEMBLY, SAFETY BRAKE	1
36	11431	PLATE, PRESSURE	1
37	18022	KNOB, SHIFTER	1
38	11429	GASKET	4
39	11446	GASKET	2
40	18033	BEARING CONE	2
41	18034	BEARING CUP	2
42	12073	SEAL GREASE	1
43	12783	BRACKET SHIFTER	1
44	11411	COVER GASKET HOUSING	1
45	19045	PLUG DRAIN	1
46	18047	FITTING GREASE	1
48	----	PLUG VENT	1
49	----	PLUG LEVEL	1
50	11430	GASKET	4
51	11310	SPRING SHIFTER KNOB	1
52	11309	STEM SHIFTER KNOB	1
54	----	ANGLE FRONT BASE	1
55	----	ANGLE REAR BASE **(NOT SHOWN)**	1
56	----	CAPSCREW	16

Eastern Wrecker Sales Inc

Winch Items - 20,000 Lb. (BRADEN)

ITEM	PART NO.	DESCRIPTION	QTY.
57	----	WASHER, LOCK	8
58	----	CAPSCREW	4
59	----	WASHER, LOCK	3
60	----	CAPSCREW	4
61	----	CAPSCREW	6
62	12146	PLUG, EXPANSION	A/R
63	13028	ROLLPIN	A/R
64	11398	SCREW, ADJUSTING	1
65	88005	SHOE ASSEMBLY DRAG BRAKE	1
68	18002	SHOE ASSEMBLY DRAG BRAKE	1
72	11426	DISC, FRICTION	2
73	11791	NUT, JAM	1
75	12767	PLUG, EXPANSION	A/R
76	----	CAPSCREW	2
77	----	SAE PLATE-AMU7-16F **(NOT SHOWN)**	1
78	----	PLATE, WARNING **(NOT SHOWN)**	1
79	----	SCREW, DRIVE **(NOT SHOWN)**	4
80	139478	SCREW, SET	1
90	----	INSERT THREAD	8
91	----	LOCKWASHER	1
92	----	CAPSCREW **(NOT SHOWN)**	5
93	23144	ADAPTER - MOTOR	1
94	23081	COUPLING HALF-WINCH	1
95	110448	COUPLING HALF-MOTOR	1
96	23078	SPACER - CONSTANT	1
97	13424	ROLLER, CHAIN	1
98	----	CAPSCREW	4
99	----	CAPSCREW **(NOT SHOWN)**	4
100	----	LOCKWASHER	4
101	----	LOCKWASHER **(NOT SHOWN)**	4
102	----	SPACER - VARIABLE	2
103	----	CAPSCREW	4
104	----	SPRING - SPACER	1
105	61344	HYD. MOTOR ADAPTER KIT, 20,000# WINCH **(ITEMS 106-117)**	1
106	23144	ADAPTER, MOTOR	1
107	23081	COUPLING HALF, WINCH	1
108	110448	COUPLING HALF, MOTOR	1
109	23078	SPACER, CONSTANT	1
110	13424	CHAIN ROLLER	1
111	----	CAPSCREW	4
112	----	CAPSCREW	4
113	----	LOCKWASHER	4
114	----	LOCKWASHER	4
115	110451	SPACER	1
116	----	CAPSCREW	4
117	110452	SPRING SPACER	1

Eastern Wrecker Sales Inc

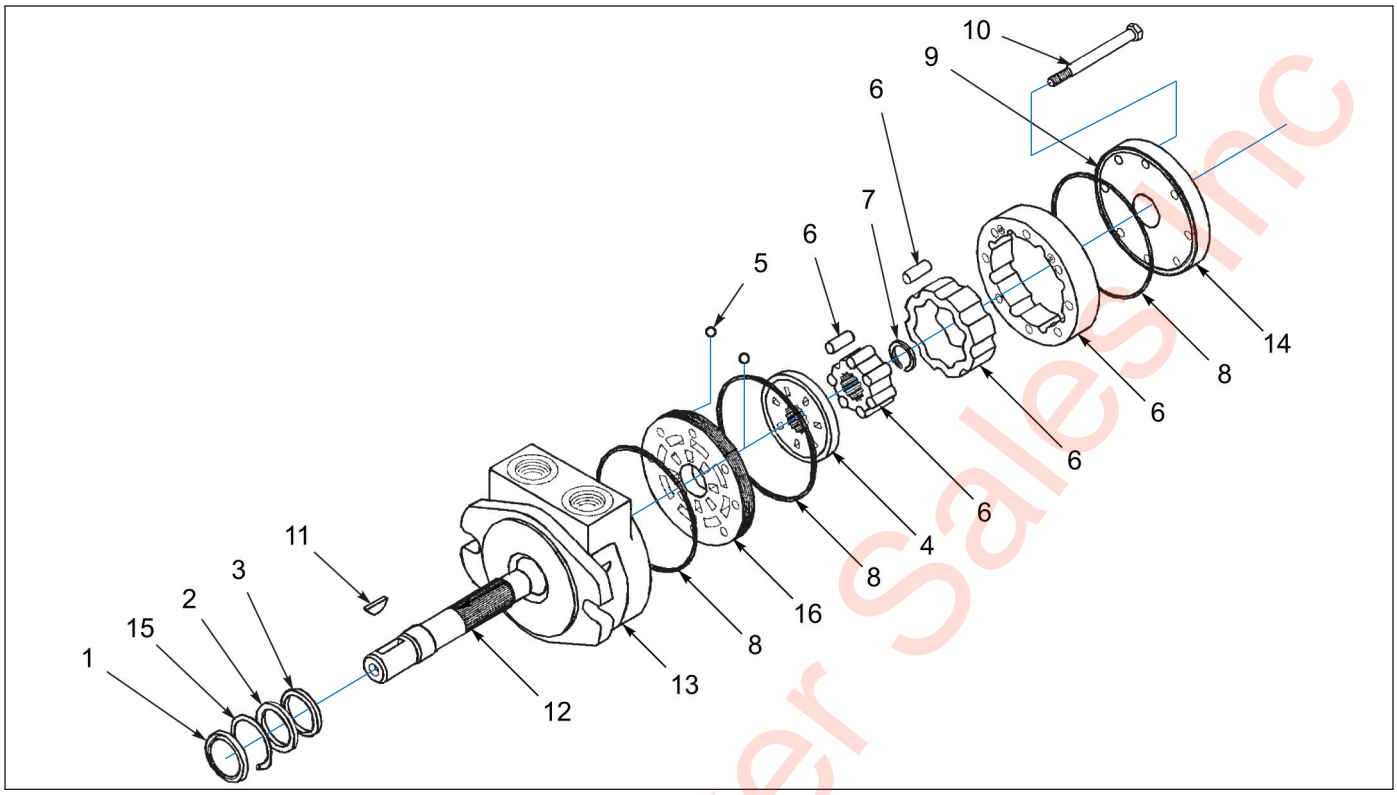

Figure 1-83: Winch Motor Assembly

Winch Motor Assembly

ITEM	PART NO.	DESCRIPTION	QTY.
	3-481-010006	MOTOR, HYDRAULIC - 12K WINCH	
	3-481-010007	MOTOR, HYDRAULIC - 20K WINCH	
1	-----	SEAL DUST	1
2	-----	BACK-UP RING	1
3	-----	SEAL LIP	1
4	-----	ROTARY VALVE	1
5	-----	CHECK VALVE BALL	2
6	-----	IGR ASSEMBLY - 20K WINCH	1
6	-----	IGR ASSEMBLY - 12K WINCH	1
7	-----	SNAP RING	1
8	1046	SQUARE RING SEAL	3
9	-----	PLUG VENT W/O-RING	1
10	-----	BOLTS HEX - 20K WINCH	8
10	-----	BOLTS HEX - 12K WINCH	8
11	-----	KEY WOODRUFF	1
12	-----	SHAFTFOR - 20K WINCH	1
12	-----	SHAFTFOR - 12K WINCH	1
13	-----	BODY/BEARING ASSEMBLY - 20K WINCH	1
13	-----	BODY/BEARING ASSEMBLY - 12K WINCH	1
14	-----	COVER/BEARING ASSEMBLY	1
15	-----	SNAP RING SHAFT	1
16	-----	COMMUTATOR PLATE	1
17	2263	SEAL KIT BODY **(NOT SHOWN)**	1
17	-----	SEAL KIT BODY VITON **(NOT SHOWN)**	1

Eastern Wrecker Sales Inc

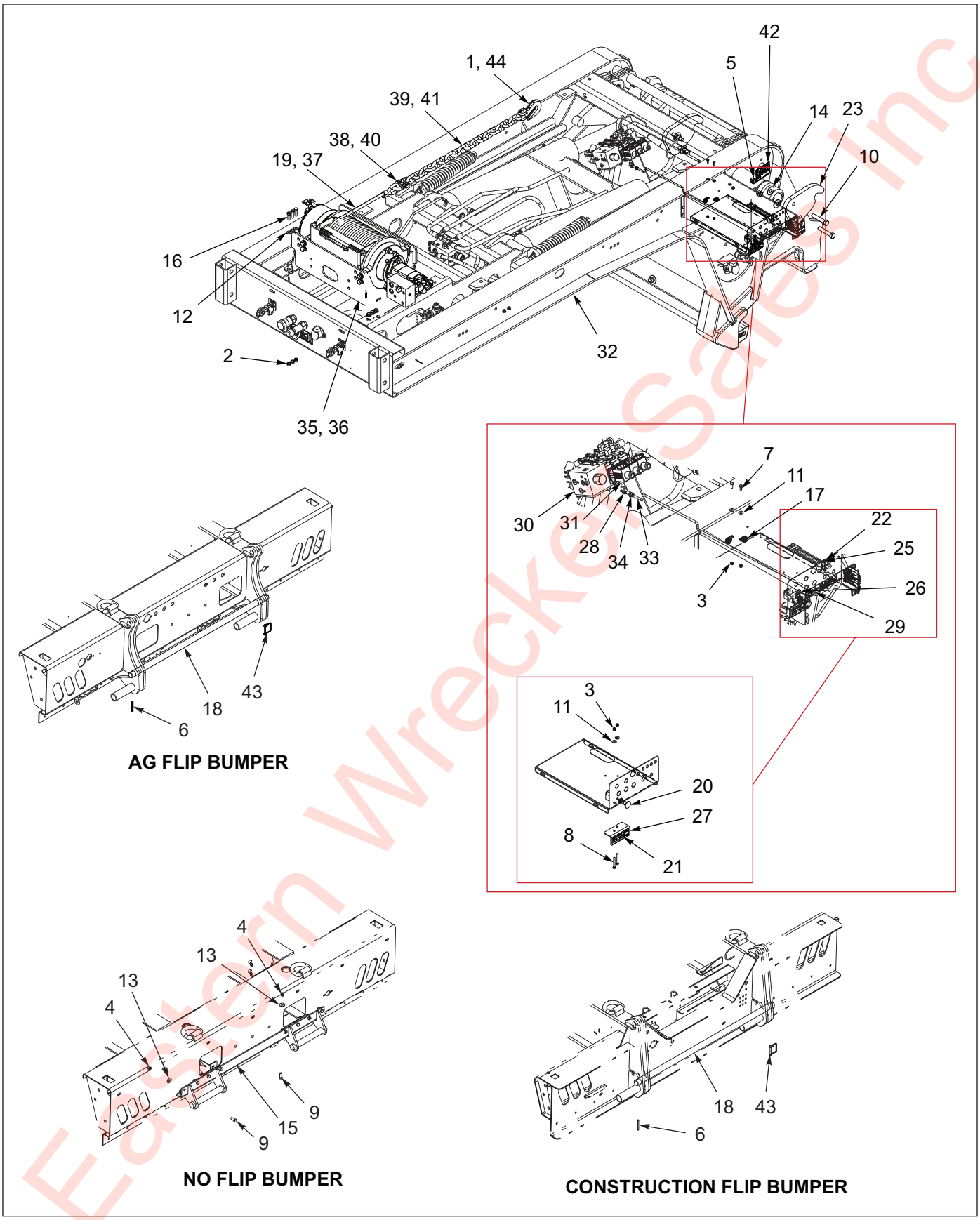

Figure 1-84: Winch Installation - 2 Speed (WARN) (1 of 2)

Eastern Wrecker Sales Inc

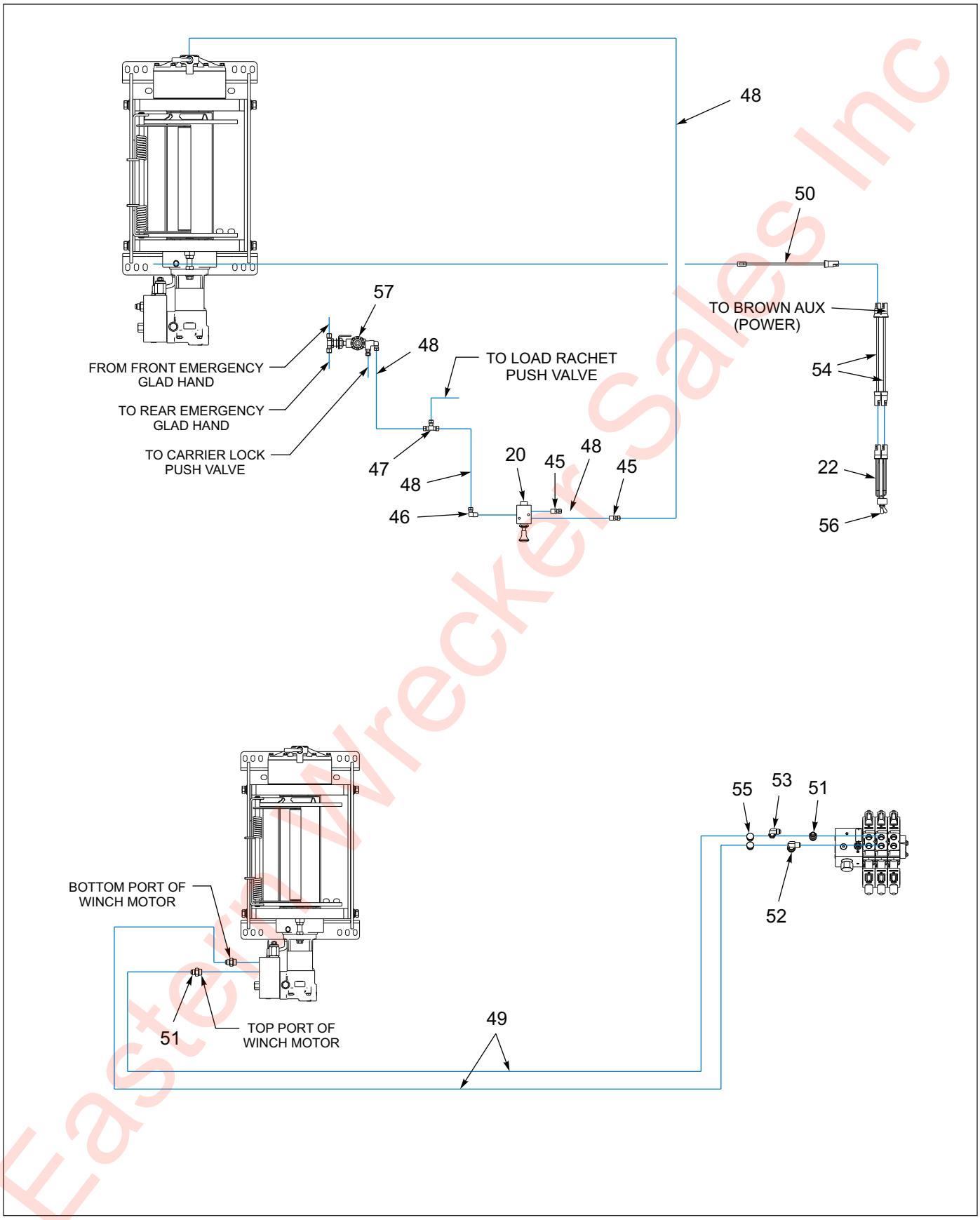

Figure 1-85: Winch Installation - 2 Speed (WARN) (2 of 2)

Eastern Wrecker Sales Inc

Winch Installation - 2 Speed (WARN)

ITEM	PART NO.	DESCRIPTION	QTY.			
	199217	WINCH INSTL20K WARN E-G/N N/FL	*			
	199218	WINCH INSTL30K WARN E-G/N N/FL		*		
	199704	WINCH INSTL20K WARN E-G/N FLIP			*	
	199705	WINCH INSTL30K WARN E-G/N FLIP				*
1	1-382-010035-06	HOOK,CLEVIS GRAB 5/8 GRD80	--	1	--	1
2	1-512-010002-09	NUT,HEX SLFLKG,1/2-13,GR C,ZP	12	12	12	12
3	1-512-010005-01	NUT,HEX,SLFLKG GRB 1/4-20	4	4	4	4
4	1-512-010005-09	NUT,HEX,SLFLKG, 1/2-13 GRB	12	12	--	--
5	1-512-010005-15	NUT,HEX,SLFLKG GRB 3/4-10	4	4	4	4
6	1-647-010004259	SPRING PIN, SLOTTED 3/8X3	--	--	1	1
7	1-654-010047-04	SCREW,HEX CAP,1/4-20X3/4 GR5	2	2	2	2
8	1-654-010047-10	SCREW,HX CP,1/4-20UNC X2 GR5	2	2	2	2
9	1-654-010055-02	SCREW 1/2-13UNCX1-1/4 CP GR5	12	12	--	--
10	1-654-010061-13	SCREW,HX CP 3/4-10UNCX4 GR5	4	4	4	4
11	1-861-010032-07	WASHER,FLAT 1/4 ZP	4	4	4	4
12	1-861-010032-14	WASHER, FLAT 1/2" N ZP/CD	12	12	12	12
13	1-861-010032-15	WASHER, FLAT 1/2 W ZP/CD	12	12	--	--
14	1-861-010032-21	WASHER, FLAT 3/4 W ZP/CD	4	4	4	4
15	105195	ANCHOR WLDMT	1	1	--	--
16	108439	SCREW HX CP 1/2-13UNCX1-1/2G8	12	12	12	12
17	125894	CLAMP, CABLE 5/8 SST	2	2	2	2
18	130536	PIN HOOK ANCHOR 835AG WINCH	--	--	1	1
19	132833	CABLE ASSY 5/8X85FLEX-X9	--	REF	--	REF
20	134657	VALVE AIR 3WAY/2POS 1/4NPT	REF	REF	REF	REF
21	135184	DECAL, WINCH FREE SPOOL	1	1	1	1
22	150117	SWITCH ASSY LIGHT GROTE	REF	REF	REF	REF
23	168528	PLATE WINCH HOOK 800	2	2	2	2
24	171915	PLATE COVER WINCH OPENING **(NOT SHOWN)**	1	1	1	1
25	174043	DECAL, WINCH, HI/LO	1	1	1	1
26	178444	BUSHING NYLON INSERT 9/16ID	REF	REF	REF	REF
27	180529	BRACKET VALVE WINCH FREE SPOOL	1	1	1	1
28	186875	CLEVIS JOINT,ROD ENDS M8.1.25	1	1	1	1
29	186877	KNOB BLACK 1" ROUND M8X1.25THD	1	1	1	1
30	186885	VALVE, 3 SP, 35 GPM, SOLENOID **(SEE PAGE 1-35)**	REF	REF	REF	REF
31	193910	STUD M8-1.25X50MM DBLE THD	1	1	1	1
32	-----	835 GOOSENECK ASSEMBLY	REF	REF	REF	REF
33	197610	ROD HANDLE M8X1.25 ENDS LONG	1	1	1	1
34	1DM8ER	NUT HEX HD M8X1.25 CL8.8	1	1	1	1
35	204958	WINCH ASSY WARN 30K 800 **(SEE PAGE 1-161)**	--	1	--	1
36	204959	WINCH ASSY WARN 20K 800 **(SEE PAGE 1-160)**	1	--	1	--
37	3-155-010018-6	CABLE 5/8 W/LOOP 85FT	REF	--	REF	--
38	3-174-010038	CHAIN LINK CONNECTING 1/2	1	--	1	--
39	3-174-010039036	CHAIN 1/2X36" GRD 7 21LINKS	1	--	1	--
40	3-174-010059	CHAIN LINK CONNECTING 5/8	--	1	--	1
41	3-174-010060036	CHAIN 5/8X36IN GRADE 80	--	1	--	1
42	3-573-010299	DECAL, WARNING WINCH CABLE	1	1	1	1
43	516-22PTL	RETAINING PIN MUD FLAP	--	--	1	1
44	7HCGHT500	HOOK CLEVIS GRAB 1/2 GR70	1	--	1	--
45	1-297-010007-05	FITTING, AIR, 1/4TUBEX1/4NPT	2	2	2	2

Eastern Wholesale Sales Inc

Winch Installation - 2 Speed (WARN)

ITEM	PART NO.	DESCRIPTION	QTY.			
46	1-297-010008-07	FITTING AIR 90 1/4TUBEX1/4NPT	1	1	1	1
47	1-297-010010-01	FITTING,AIR,UNION TEE 1/4	1	1	1	1
48	1-833-010001	TUBING NYLON 1/4 OD	17	17	17	17
49	104370	HOSE ASSY 1/2X126,SAE37,STR90	2	2	2	2
50	164052	HARNESS,60"BRANCH,WORK LIGHT	1	1	1	1
51	202702-10-8S	ADAPTER, #10 O-RING #8 TUBE	3	3	3	3
52	2062-10-8S	ADAPTER,90, #10 O-RING-TUBE	1	1	1	1
53	2071-8-8S	ADAPTER90 #8 FLR SWIVEL #8JIC	1	1	1	1
54	3-368-010252	HARNESS ASSY BKHD LIGHT EXT	2	2	2	2
55	620-0887	FTG,PLUG #10 MALE O-RING BOSS	2	2	2	2
56	81264	RUBBER BOOT FOR ELECT SWITCH	1	1	1	1
57	905-54-107	BRAKE PROTECTION VALVE	REF	REF	REF	REF

Eastern Wrecker Sales Inc

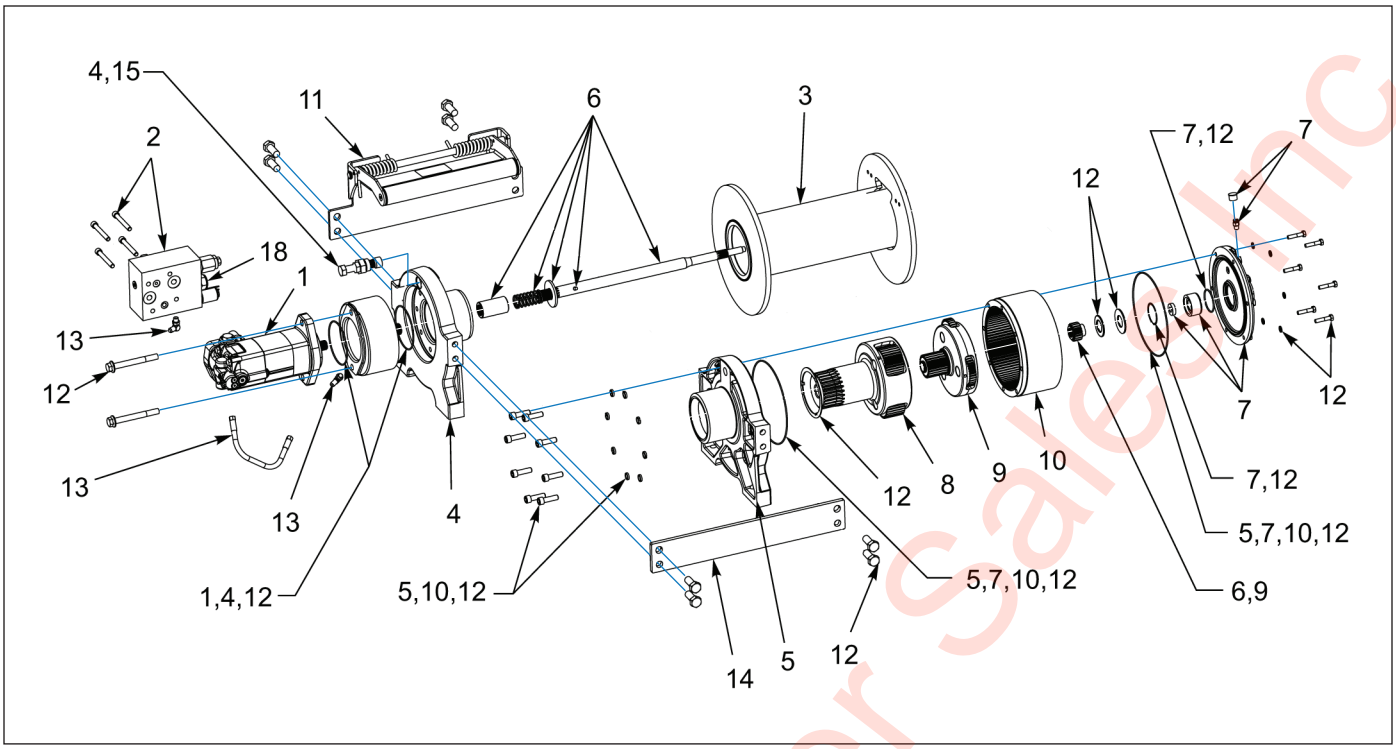

Figure 1-86: Winch Items - 20K 2 Speed (WARN)

Winch Items - 20K 2 Speed (WARN)

ITEM	PART NO.	DESCRIPTION	QTY.
	167521	WINCH, 20K WARN 2 SPEED	
1	178718	SERVICE KIT, MOTOR HYD 11.9 CI-SPD	1
2	178715	SERVICE KIT, MANIFOLD HYDRAULIC	1
3	162208	SERVICE KIT, DRUM ASSEMBLY 20K LONG	1
4	178999	SERVICE KIT, DRUM RETARDER DRUM SUPPORT	1
5	162210	SERVICE KIT, DRUM SUPPORT GEAR END	1
6	162211	SERVICE KIT, DRIVESHAFT LONG	1
7	162941	SERVICE KIT, END HOUSING ASSEMBLY AIR	1
8	162213	SERVICE KIT, CARRIER STAGE 2-6.0-4.75	1
9	162214	SERVICE KIT, STAGE 1-6.0-4.75	1
10	162215	SERVICE KIT, RING GEAR	1
11	162216	SERVICE KIT, TENSIONER LONG	1
12	179000	SERVICE KIT, HARDWARE SEAL	1
13	162218	SERVICE KIT, HOSE HYDRAULIC	1
14	162219	SERVICE KIT, TIE PLATE LONG	1
15	179001	SERVICE KIT, DRUM RETARDER	1
16	162220	SERVICE KIT, WIRE ROPE ASSEMBLY 9/16 X 245’	1
17	162207	SERVICE KIT, BRAKE ASSEMBLY	1
18	199104	SOLENOID FOR 2SP WARN, 20K-30K	1
19	201642	SOLENOID COIL	1
20	201643	OVERCENTER VALVE	1
21	201644	O-RING	2
22	201645	O-RING	2
23	201650	SET SCREW	2

Eastern Wrecker Sales Inc

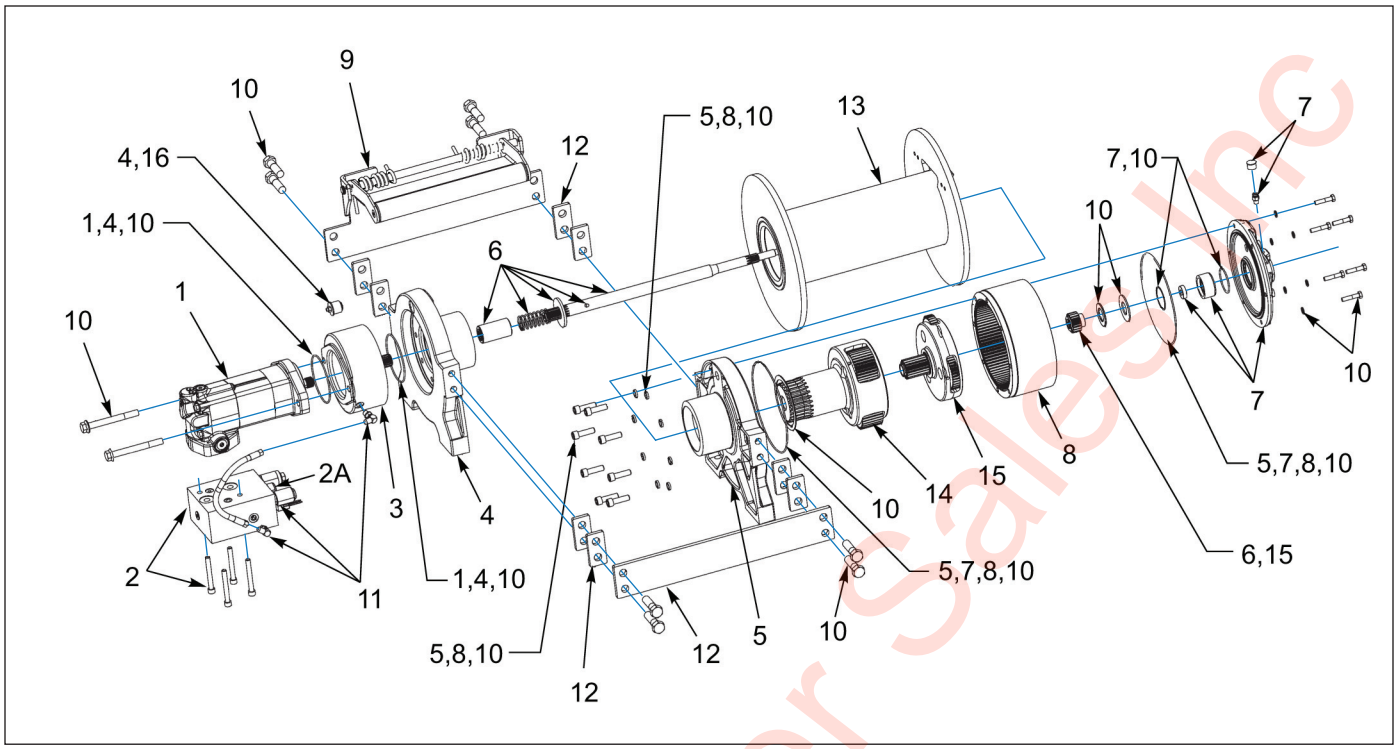

Figure 1-87: Winch Items - 30K 2 Speed (WARN)

Winch Items - 30K 2 Speed (WARN)

ITEM	PART NO.	DESCRIPTION	QTY.
	172877	WINCH, 30K WARN AIR KICKOUT	
1	178714	SERVICE KIT - MOTOR HYDRAULIC 14.9CI	1
2	178715	SERVICE KIT - MANIFOLD HYDRAULIC	1
3	162207	SERVICE KIT - BRAKE ASSEMBLY	1
4	178716	SERVICE KIT - DRUM SUPPORT, MOTOR END RETARDER	1
5	162210	SERVICE KIT - DRUM SUPPORT, GEAR END	1
6	162211	SERVICE KIT - DRIVE SHAFT, LONG	1
7	162941	SERVICE KIT - END HSG ASSY AIR	1
8	162215	SERVICE KIT - RING GEAR	1
9	162216	SERVICE KIT - TENSIONER LONG	1
10	162217	SERVICE KIT - HARDWARE SEAL	1
11	162218	SERVICE KIT - HOSE HYDRAULIC	1
12	162219	SERVICE KIT - TIE PLATE LONG	1
13	162942	SERVICE KIT - DRUM ASSEMBLY 30K LONG	1
14	162943	SERVICE KIT - CARRIER, STAGE 2 6.0-6.0	1
15	162944	SERVICE KIT - CARRIER, STAGE 1 6.0-6.0	1
16	178717	SERVICE KIT - EXPANSION PLUG 1” RUBBER	1
17	162945	WIRE ROPE ASSEMBLY 5/8 EIPS X 245 FT **(NOT SHOWN)**	1
18	199104	SOLENOID FOR 2SP WARN, 20K-30K	1
19	201642	SOLENOID COIL	1
20	201643	OVERCENTER VALVE	1
21	201644	O-RING	2
22	201645	O-RING	2
23	201650	SET SCREW	2

Eastern Wrecker Sales Inc

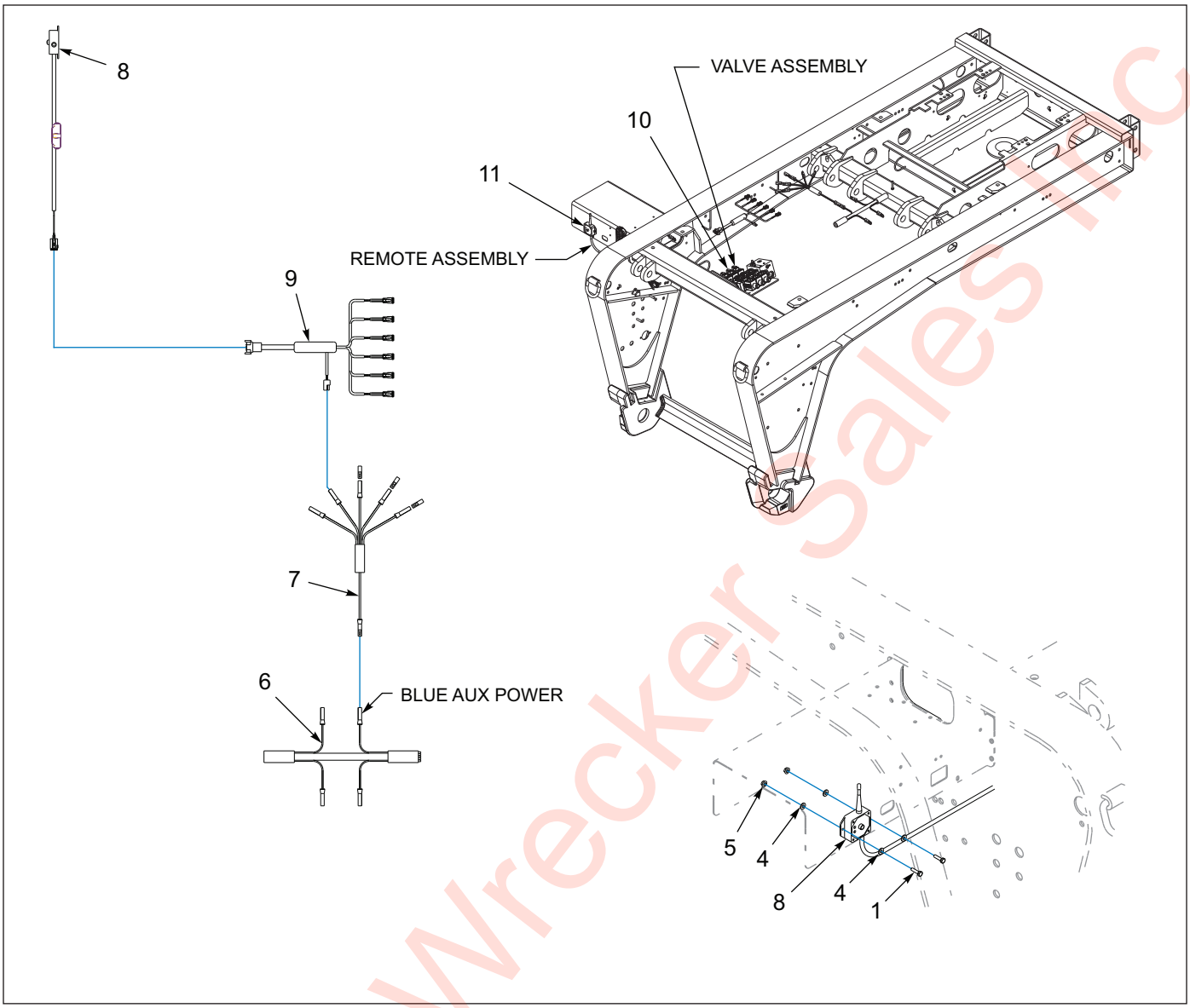

Figure 1-88: Winch Remote Installation

Winch Remote Installation

ITEM	PART NO.	DESCRIPTION	QTY.
	199718	WINCH REMOTE 800-E KAR-TECH	
1	1-654-010047-06	SCREW,HX CP 1/4-20UNCX1 GR5	2
2	1-660-010006	SILICONE, CLEAR RTV **(NOT SHOWN)**	.5
3	1-796-010002-01	TIE, STRAP,PLASTIC .140X5.50 **(NOT SHOWN)**	2
4	1-861-010032-06	WASHER, FLAT 1/4 N ZP/CD	4
5	108417	NUT SPIRAL 1/4-20HX FG	2
6	143101	HARNESS FRONT MAIN GROTE	REF
7	150093	HARNESS 5 AUX BRANCHES GROTE	1
8	168648	RECEIVER/TRANS MACRO KAR SL AX **(SEE PAGE 1-163)**	1
9	186882	HARNESS,CONTROL VALVE,DUETSCH	1
10	186885	VALVE, 3 SP, 35 GPM, SOLENOID **(SEE PAGE 1-35)**	REF
11	194407	PLUG ASSY DUMMY DEUTSCH 2 PIN	2

Eastern Wrecker Sales Inc

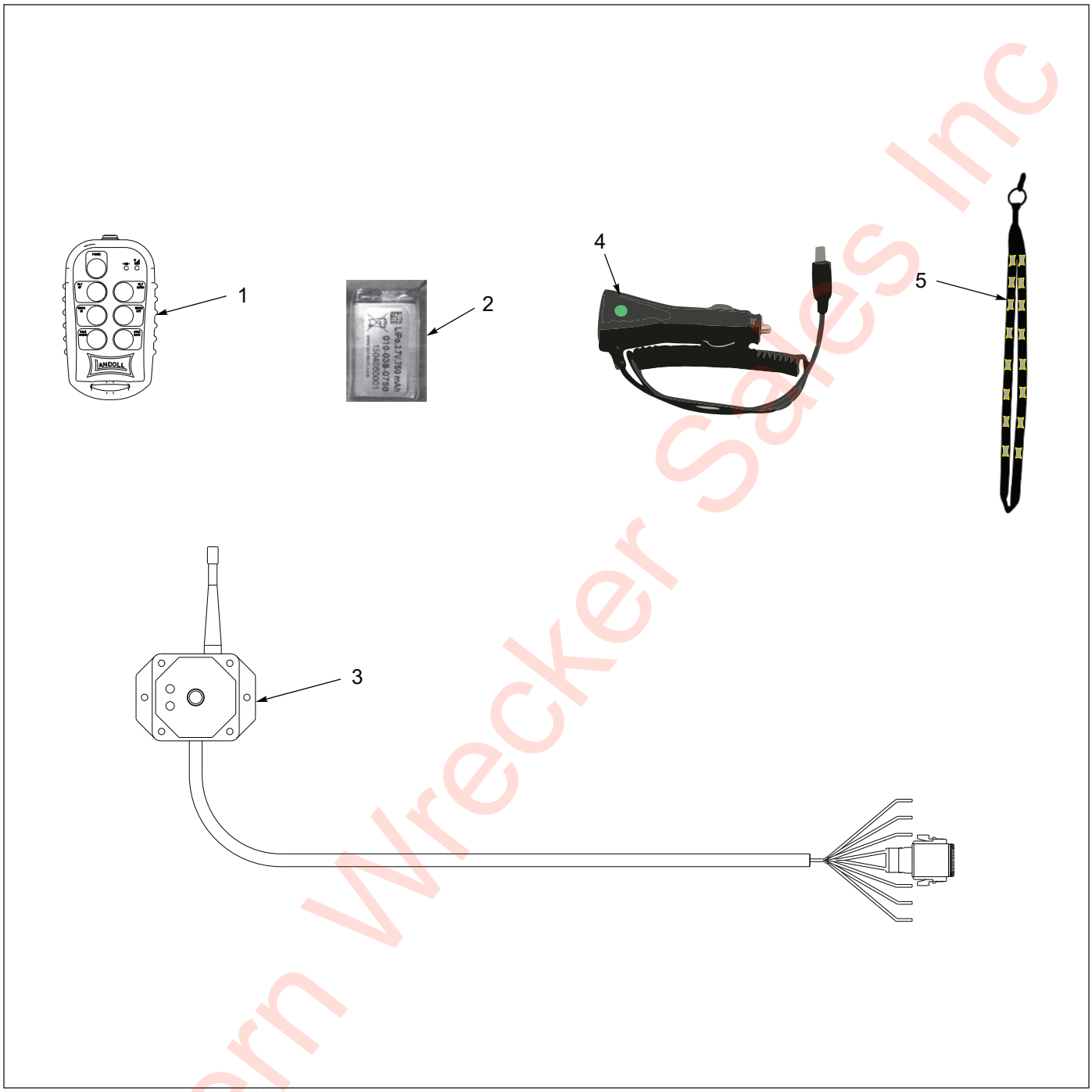

Figure 1-89: Receiver Transmitter - Macro Kar SL AX

Receiver Transmitter - Macro Kar SL AX

ITEM	PART NO.	DESCRIPTION	QTY.
	168648	RECEIVER TRANSMITTER, MACRO KAR, SL AX	REF
1	168975	MACRO TRANSMITTER W/ DECAL	1
2	197460	REPLACEMENT BATTERY, KAR-TECH MACRO	1
3	175583	RECEIVER ASSY, KAR TECH	1
4	168976	CAR CHARGER 12V TO MICRO USB	1
5	168979	LANYARD, LANDOLL	1

Eastern Wrecker Sales Inc

Engine Assemblies - Option

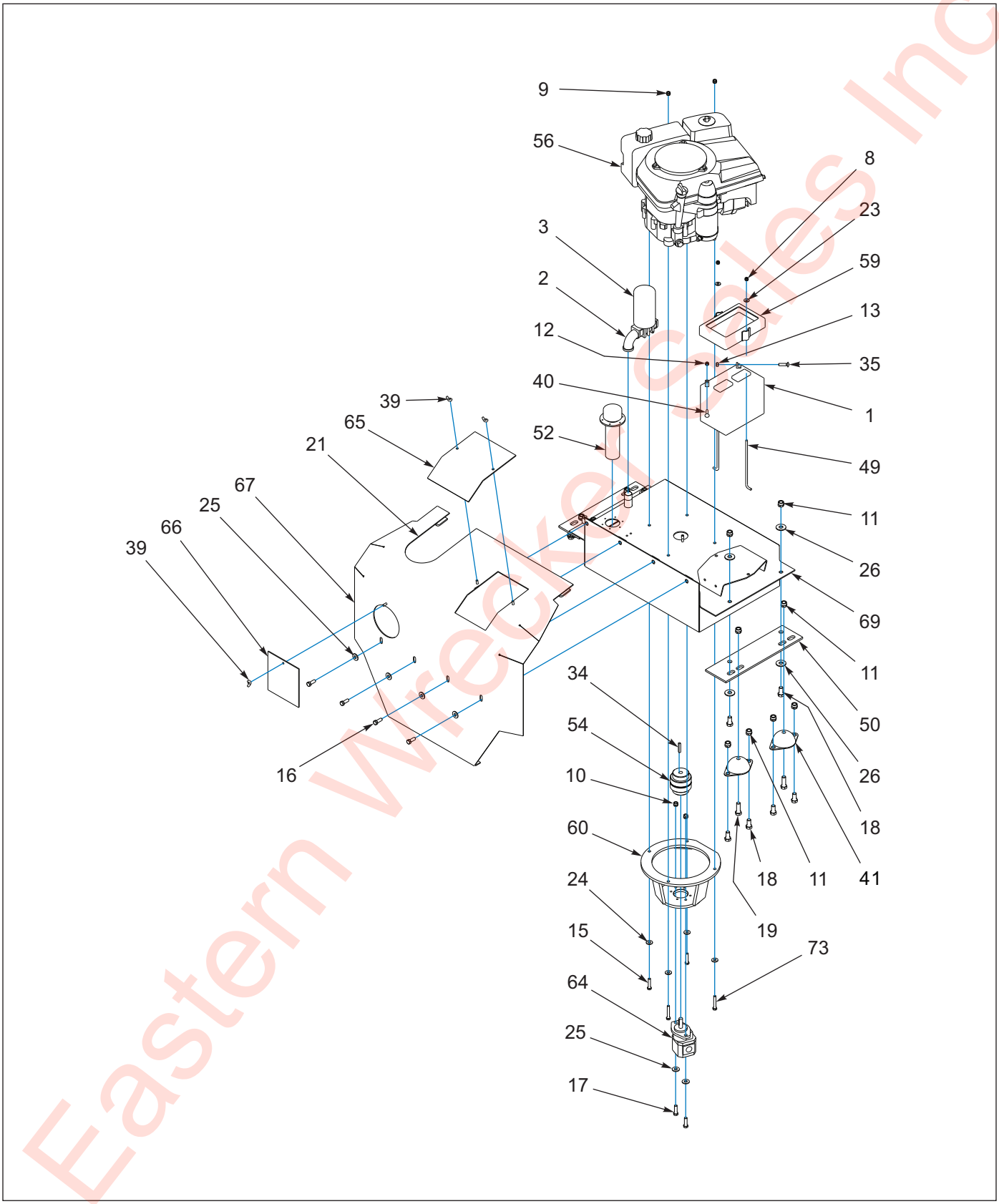

Figure 1-90: 42-11 HP Honda Engine Drive Installation (1 of 2)

Eastern Wrecker Sales Inc

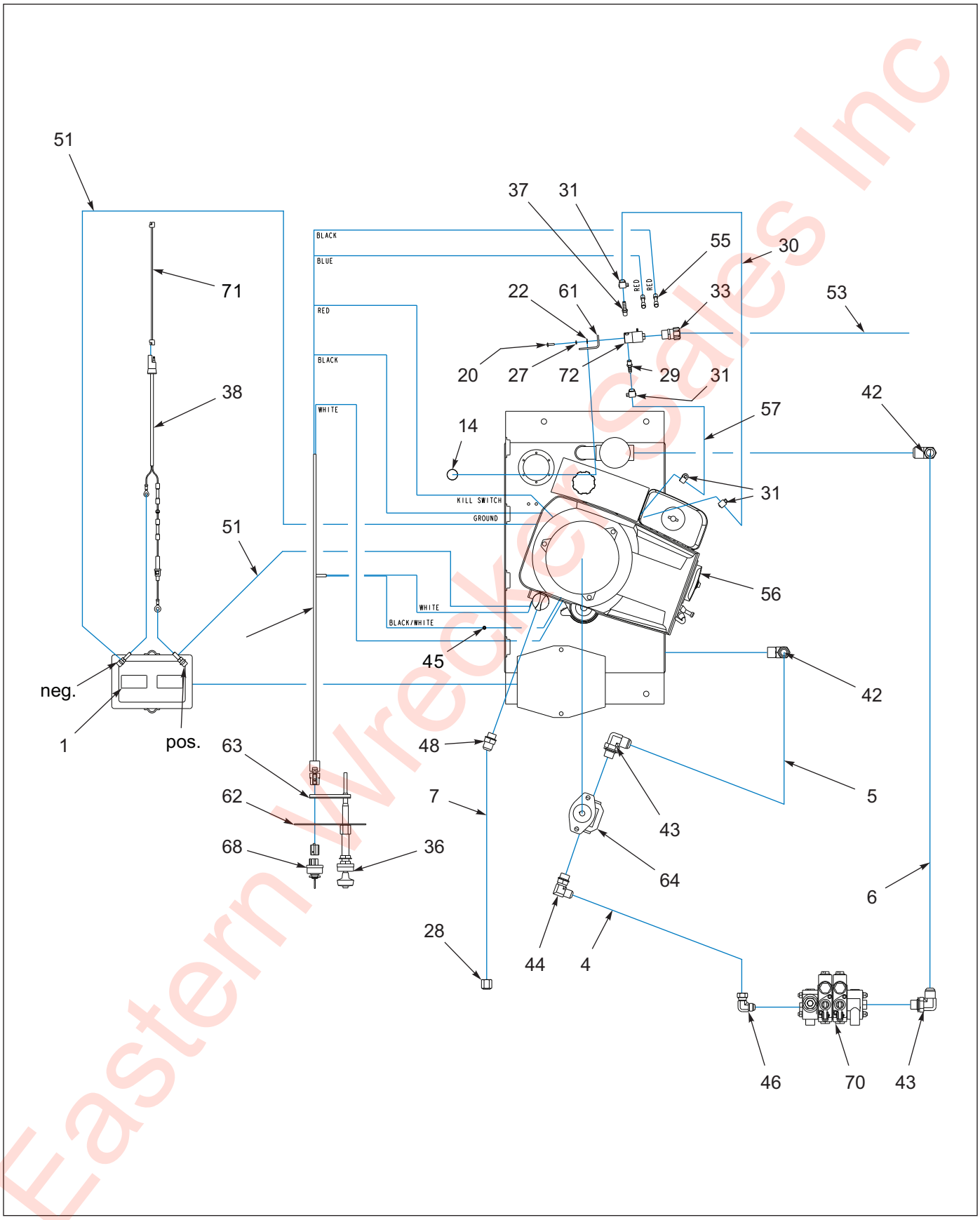

Figure 1-91: 42-11 HP Honda Engine Drive Installation (2 of 2)

Eastern Wrecker Sales Inc

42-11 Hp Honda Engine Drive Installation

ITEM	PART NO.	DESCRIPTION	QTY.
	3-410-010912	42-11 HP HONDA ENGINE DRIVE INSTALLATION **(REF ONLY)**	
1	1-060-010004	BATTERY, 12 VOLT ALL-PURPOSE UTILITY	1
2	1-271-010005-05	ELBOW, STR 3/4	1
3	1-295-010001	RETURN LINE FILTER	1
4	1-397-010302060	HOSE ASSEMBLY 60”	1
5	1-397-010304016	HOSE ASSEMBLY 16”	1
6	1-397-010305060	HOSE ASSEMBLY 60”	1
7	1-397-010318018	HOSE ASSEMBLY 1/2	1
8	1-512-010005-01	NUT, HEX LOCK 1/4-20 GRB	2
9	1-512-010005-03	NUT, HEX LOCK 5/16-18	2
10	1-512-010005-05	NUT, HEX LOCK 3/8-16 GRB	8
11	1-512-010005-09	NUT, HEX LOCK 1/2-13 GRB	16
12	1-512-010007-05	NUT, HEX 1/4-20	1
13	1-512-010007-06	NUT, HEX 5/16-18	1
14	1-560-010002-05	PLUG, PIPE 3/4-14	1
15	1-654-010050-07	SCREW, HEX HEAD CAP 5/16 -24 X 1-1/2 GR5	2
16	1-654-010051-05	SCREW, HEX HEAD CAP 3/8-16 X 1 GR5	4
17	1-654-010051-06	SCREW, HEX HEAD CAP 3/8-16 X 1-1/4 GR5	4
18	1-654-010055-01	SCREW, HEX HEAD CAP 1/2-13 X 1 GR5	12
19	1-654-010055-03	SCREW, HEX HEAD CAP 1/2-13 X 1-1/2 GR5	4
20	1-654-010100015	SCREW, MACH SLOT TRUSS HEAD #8-32 X 5/8	2
21	1-822-010002	TRIM-LOK 3/16 X 23	1
22	1-861-010032-03	WASHER, FLAT #10	2
23	1-861-010032-07	WASHER, FLAT 1/4	2
24	1-861-010032-09	WASHER, FLAT 5/16	4
25	1-861-010032-11	WASHER, FLAT 3/8W	8
26	1-861-010032-15	WASHER, FLAT 1/2W	8
27	1-861-010034-07	WASHER SPLIT LOCK #10	2
28	102-0323	CAP NUT	1
29	102-0511	HOSE BARB	2
30	104-0505	HOSE FUEL LINE	2
31	105-0105	CLAMP, HOSE	4
33	106-0078	STRAIN RELIEF CONN 1/2	1
34	110-4337	KEY, STEEL	1
35	111-1267	SCREW, RD HEAD SQ NECK 5/16-18 X 1-1/4 GR5	1
36	139140	THROTTLE CABLE	1
37	144736	HOSE BARB	1
38	153032	HARNESS, TRICKLE CHARGE BATTERY	1
39	1/4-20WN	WING NUT, 1/4-20	3
40	1/4-20X1-1/4 CB	SCREW, RD HEAD SQ NECK 1/4-20 X 1-1/4	1
41	CA-1595	MACHINE MOUNT 40 DUROMETER	4
42	2024-12-12S	ADAPTER, 90	2
43	2062-10-12S	ADAPTER 90	1
44	2062-10-8S	ADAPTER 90	1
45	STP-164	CONNECTOR, FEMALE 1/4 SPADE INSULATED	1
46	2071-8-8S	ADAPTER 90	1
48	3-007-010042	ADAPTER	1
49	3-014-010023	ANCHOR BOLT BATTERY	2
50	3-054-010066	BAR, 4 HOLE MOUNT	2

Eastern Wrecker Sales Inc

42-11 Hp Honda Engine Drive Installation

ITEM	PART NO.	DESCRIPTION	QTY.
51	3-156-010042	CABLE ASSEMBLY	2
52	3-162-010001	FILLER BREATHER STRAINER ASSEMBLY	1
53	3-201-010002	CONDUIT, FLEX PLASTIC 3/8	1
54	3-220-010010	COUPLING ASSEMBLY	1
55	3-272-010021	ELECT. BUTT SPLICE	2
56	3-273-010014	ENGINE, 11HP HONDA	1
57	3-316-010008	FUEL HOSE 3/16	1
58	3-368-010068	HARNESS, WIRING	1
59	3-380-010006	HOLD DOWN BATTERY	1
60	3-482-010051	PUMP MOUNT WELDMENT	1
61	3-482-010137	MOUNT FUEL SOLENOID	1
62	3-565-010172	PLATE MOUNTING ENGINE CONTROLS	1
63	3-565-010173	PLATE, CLAMP	1
64	3-591-010010	PUMP, HYDRAULIC	1
65	3-681-010056	COVER, ENG ACCESS	1
66	3-681-010057	COVER, HYD ACCESS	1
67	3-681-010069	SHIELD WELDMENT	1
68	3-765-010015	SWITCH ASSEMBLY, STARTER	1
69	3-786-010037	TANK WELDMENT	1
70	3-846-010041	VALVE, 2 SPOOL	REF
71	3-368-010252	HARNESS ASSEMBLY, BULKHEAD LIGHT	1
72	3-850-010002	FUEL SOLENOID 12V DC	1
73	5/16-18X2 HHCS	SCREW, HEX HEAD CAP 5/16-18 X 2 GR5	2

Eastern Wrecker Sales Inc

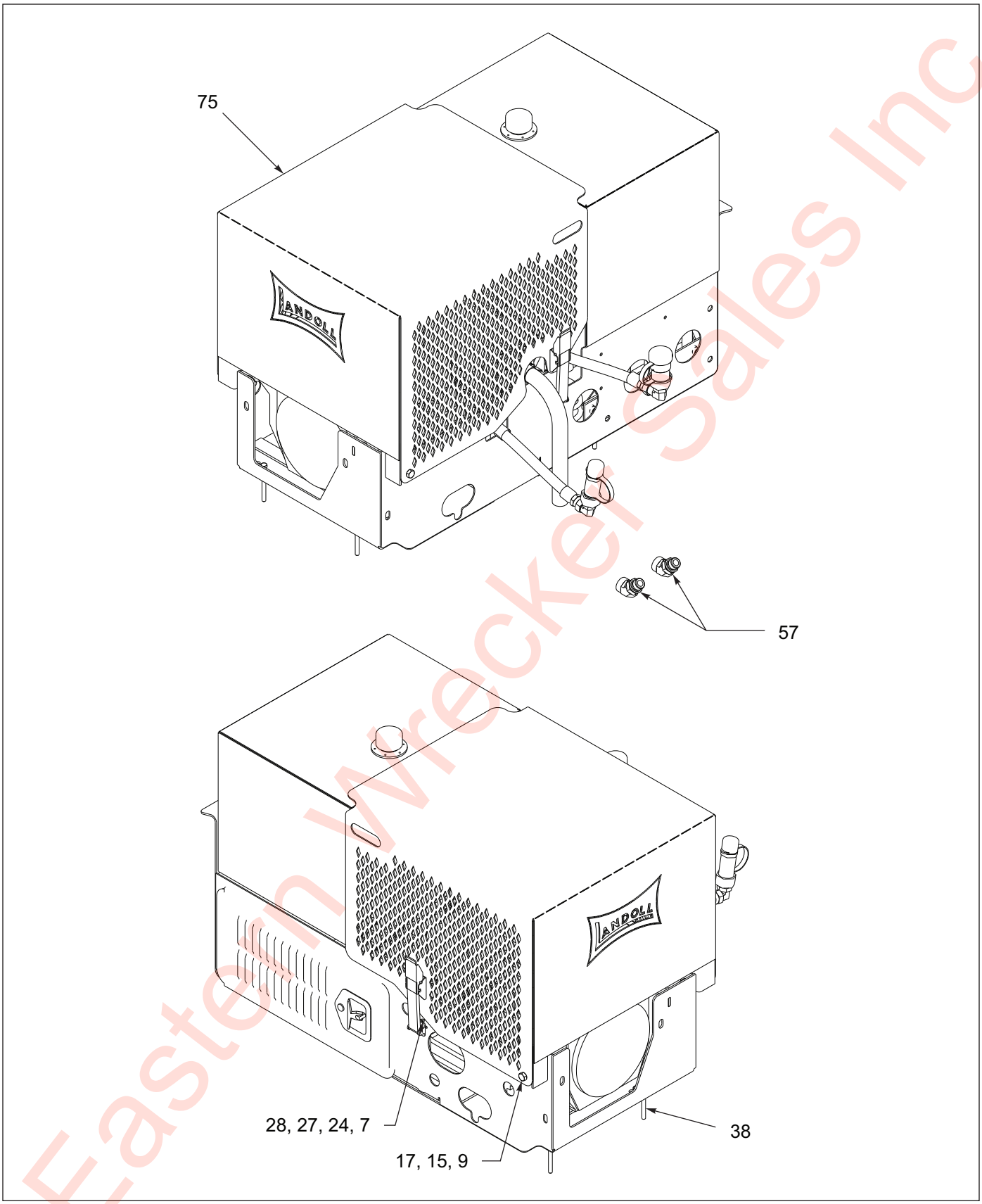

Figure 1-92: Engine - 25 HP Upper Deck Package (1 of 4)

Eastern Wrecker Sales Inc

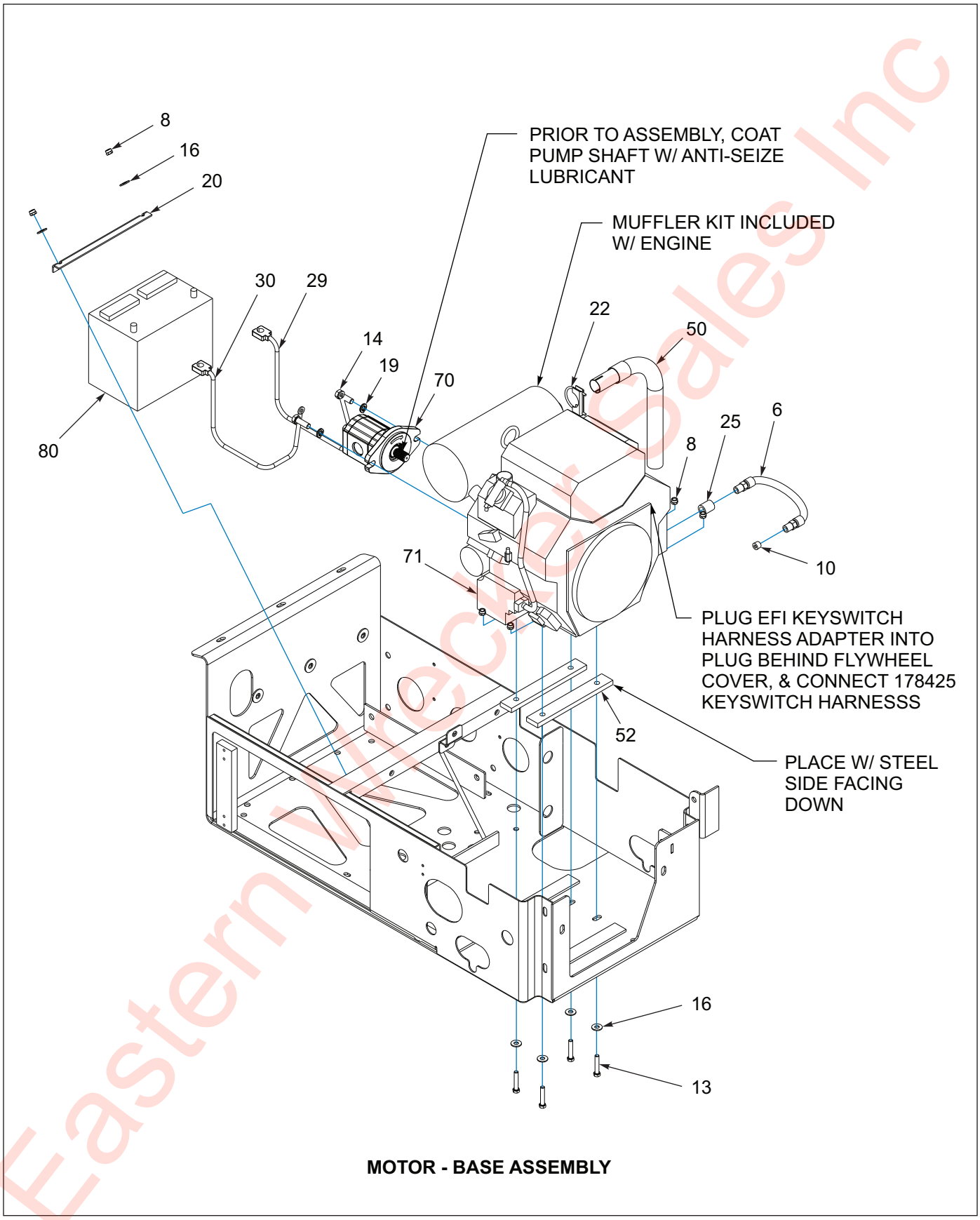

Figure 1-93: Engine - 25 HP Upper Deck Package (2 of 4)

Eastern Wrecker Sales Inc

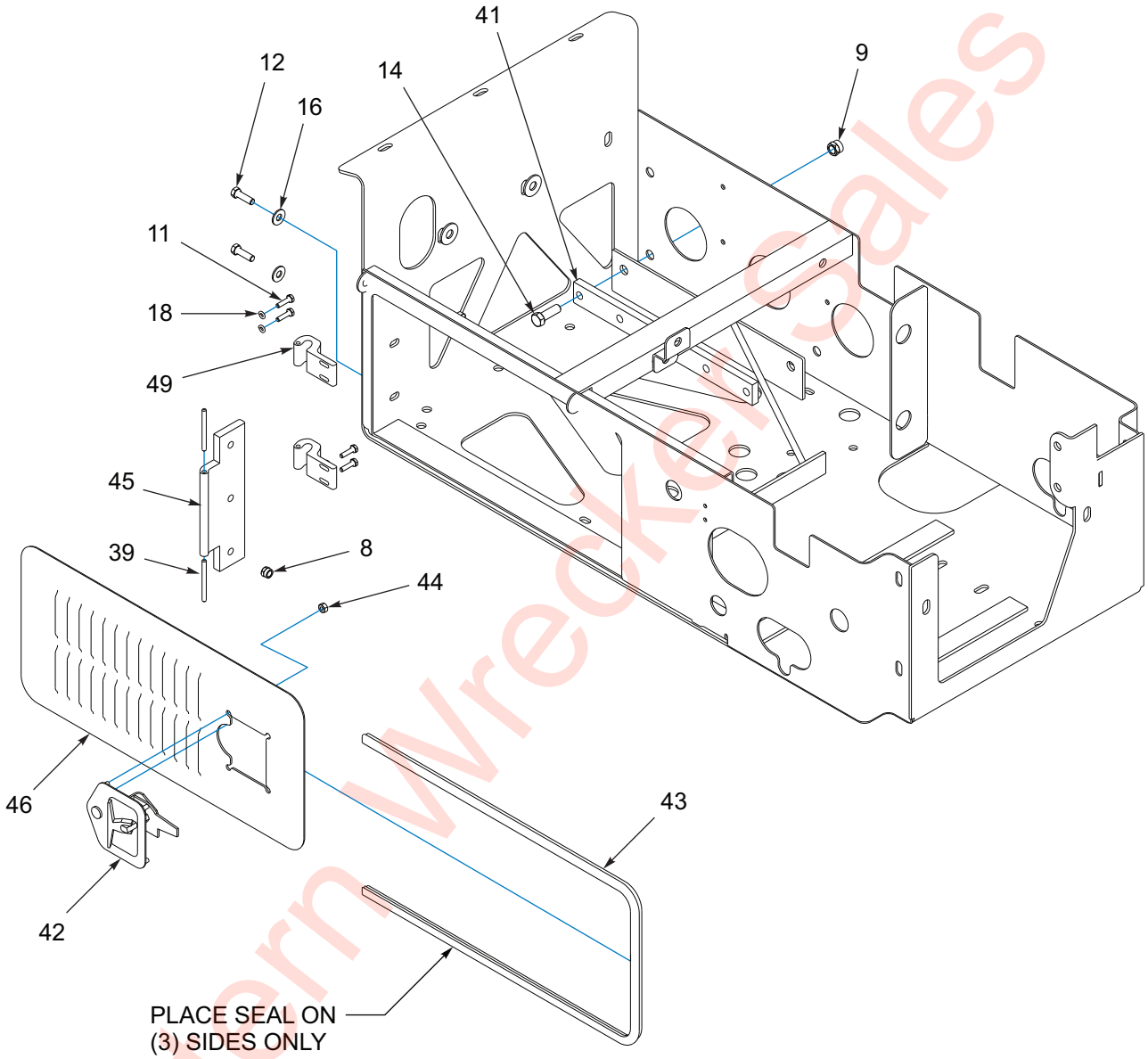

BASE - DOOR ASSEMBLY

Figure 1-94: Engine - 25 HP Upper Deck Package (3 of 4)

Eastern Wrecker Sales Inc

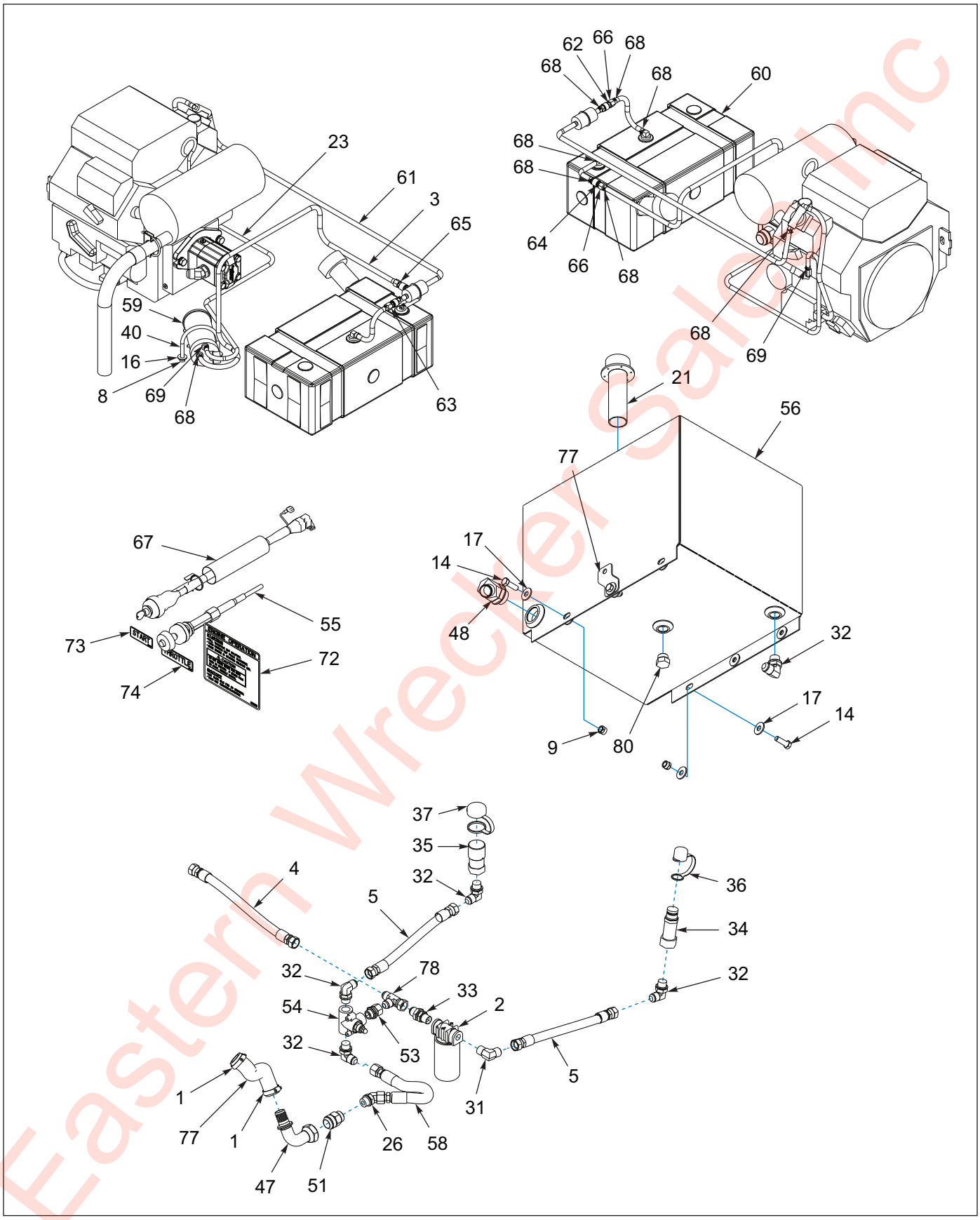

Figure 1-95: Engine - 25 HP Upper Deck Package (4 of 4)

Eastern Wrecker Sales Inc

Engine - 25 HP Upper Deck Package

ITEM	PART NO.	DESCRIPTION	QTY.
	189360	ENGINE PACKAGE, 25HP EFI, U/D	
	189360FI	FIELD INSTL ENG PKG, 25 HP EFI, U/D	
1	1-181-010046-7	CLAMP,HOSE 1-1/16 TO 2DIA #24	2
2	1-295-010001	FILTER, RETURN LINE	1
3	1-316-010013	HOSE,1/4 LOW PRESSURE FUEL	1
4	1-397-010304018	HOSE ASSY, 3/4 X 18, SAE37, STR-STB	1
5	1-397-010304060	HOSE ASSY,3/4X60,SAE37,TR-ST	2
6	1-397-010312032	HOSE ASSY,3/8X32,3/8 MPT ENDS	1
7	1-512-010004-03	NUT,HEX,SLFLK 10-24UNC, GRA	8
8	1-512-010005-05	NUT, HEX, SLFLKG GRB 3/8-16	15
9	1-512-010005-09	NUT,HEX,SLFLKG, 1/2-13 GRB	10
10	1-560-010002-03	PLUG, PIPE, 3/8NPTF	1
11	1-654-010047-06	SCREW,HX CP 1/4-20UNCX1 GR5	4
12	1-654-010051-06	SCREW,HEX CAP 3/8-16UNCX1-1/4	3
13	1-654-010051-09	SCREW,HEX CAP,3/8-16UNCX2 GR5	6
14	1-654-010055-03	SCREW,HEX CAP,1/2-13UNCX1-1/2	10
15	1-654-010055-13	SCREW, HEX, 1/2-13 UNC X 4 GR5	2
16	1-861-010032-11	WASHER, FLAT 3/8 W ZP/CD	19
17	1-861-010032-15	WASHER, FLAT 1/2 W ZP/CD	14
18	1-861-010034-09	WASHER, LKG HLCL SPR, 1/4	4
19	1-861-010034-13	WASHER, LKG HLCL SPR, 1/2	2
20	3-120-010124	BATTERY CLAMP BRKT	1
21	3-162-010001	FILLER BREATHER STRAINER ASSY	1
22	3-182-010028	CLAMP MUFFLER	1
23	3-316-010008	3/16 ID FUEL HOSE	1
24	3-443-010018	LATCH,FLEX DRAW,LEVER ASSIST	2
25	3/8P COUPL	3/8 BLK PIPE COUPLING **(NOT SHOWN)**	1
26	40-0667-02	ADAPTER, 45 #8 O-RING-TUBE	1
27	110-0116	SCREW RD HD CAP 10-24X3/4	8
28	110-0253	WASHER,FLAT 3/16 STD	8
29	514-9045-26	CABLE ASSY BATTERY POSITIVE	1
30	514-9073-18	CABLE ASSY BATTERY NEG 18 LNG	1
31	2024-12-12S	ADAPTER 90 3/4MPT X3/4M JIC	1
32	2062-12-12S	ADAPTER,90,#12 O-RINGX#12TUBE	5
33	2240-12-12S	ADAPTER,BLKHD,3/4NPT-3/4TBE	1
34	105479	COUPLER FLAT FACE MALE NOSE	1
35	105480	COUPLER FLAT FACE FEMALE BODY	1
36	105481	COUPLER DUST CAP MALE	1
37	105482	COUPLER DUST CAP FEMALE	1
38	108295	SCREW,HX CP 3/8-16UNCX4 GR5	2
39	108601	PIN, DOOR HINGE	2
40	110578	U-BOLT, 3/8-16 x 3-1/8 x 4-1/8	1
41	113856	MOUNT,ENG ISOLATOR,KOHLERCH25	1
42	114814	LATCH FOLDING T LOCKABLE	1
43	114815	SEAL, SPONGE RUBBER TRIM	1
44	115877	NUT HVY HEX 1/4-20 GR5	4
45	116326	HINGE,BASE MNT, COM ENG PKG	1
46	116328	MOUNT,DOOR WLDMT,COM ENG PKG	1
47	116330	FITTING 1.25F 37-1.25 BARB 90	1

Eastern Wacker Sales Inc

Engine - 25 HP Upper Deck Package

ITEM	PART NO.	DESCRIPTION	QTY.
48	117873	FITTING,1.63-12 SAE-1 25H/B45	1
49	119206	HINGE, DOOR ENG DRV, 25HP	2
50	119445	EXHAUST EXT WLDMT 25HP E/P	1
51	119553	CONNECTOR,O-RING/37FL,20-16	1
52	120659	ISOLATOR, KOHLER 25HP MOUNT	2
53	120660	ADAPTER #12-O/RFEM-12#FL M	1
54	120661	VALVE,HYD PRES,#12SAE,2500P	1
55	128774	CABLE, THROTTLE 40'	2
56	129264	HYD TANK WLDMT, 30G E/P	1
57	138209	ADAPTER, HYD 45 #12, MAOLE-FEM ORB	2
58	143850	HOSE, 3/4 X 35, SAE 37, #12STR-#12STR	1
59	166766	CARBON CANISTER,FUEL TANK,GAS	1
60	169531	TANK,FUEL PLSTC,6 GAL,LOW PERM	1
61	169532	HOSE, FUEL,1/4 LOW PERM, CARB	1
62	170109	FITTING,1/4MPT TO MALE QD,FORC	1
63	170110	FITTING, 5/16 BARB TO FEMALE QD, FORCE	1
64	170111	FITTING,1/4MPT TO MALE QD,SUZU	1
65	170112	FITTING, 5/16 BARB TO FEMALE QD, SUZUKI	
66	173860	FITTING,1/4 HOSE BARBX1/4 FNPT	2
67	178428	SWITCH & HARNESS KIT KOLHER UD	1
68	178638	SPRING CLAMP, 1/2"OD FUEL HOSE	8
69	179090	SPRING CLAMP,7/16"OD FUEL HOSE	2
70	186811	PUMP HYDRAULIC GEAR 0.77CID	1
71	189308	ENGINE, KOHLER, 25HP, EFI, PUMP MNT	1
72	189309	DECAL, EFI ENG PKG INSTR	1
73	189310	DECAL, START, ENG PKG	1
74	189311	DECAL, THROTTLE, ENG PKG	1
75	189364	WELDMENT, HOOD ENG PKG, 25HP EFI	1
76	189369	PLATE, FUEL HOSE CLAMP	1
77	193904	HOSE, 1-1/4 X 7-1/2 SUCTION	1
78	203102-12-12S	ADAPTER,TEE, #12, SAE37 SWIVL	1
79	900598-12S	PLUG, O-RING BOSS #12	1
80	2481X	BATTERY 12 VOLT	1
81	199105	FUEL FILTER KOHLER, 25-050-42-S **(NOT SHOWN)**	1
82	210377	FUEL PUMP KOHLER **(NOT SHOWN)**	1

Eastern Wrecker Sales Inc

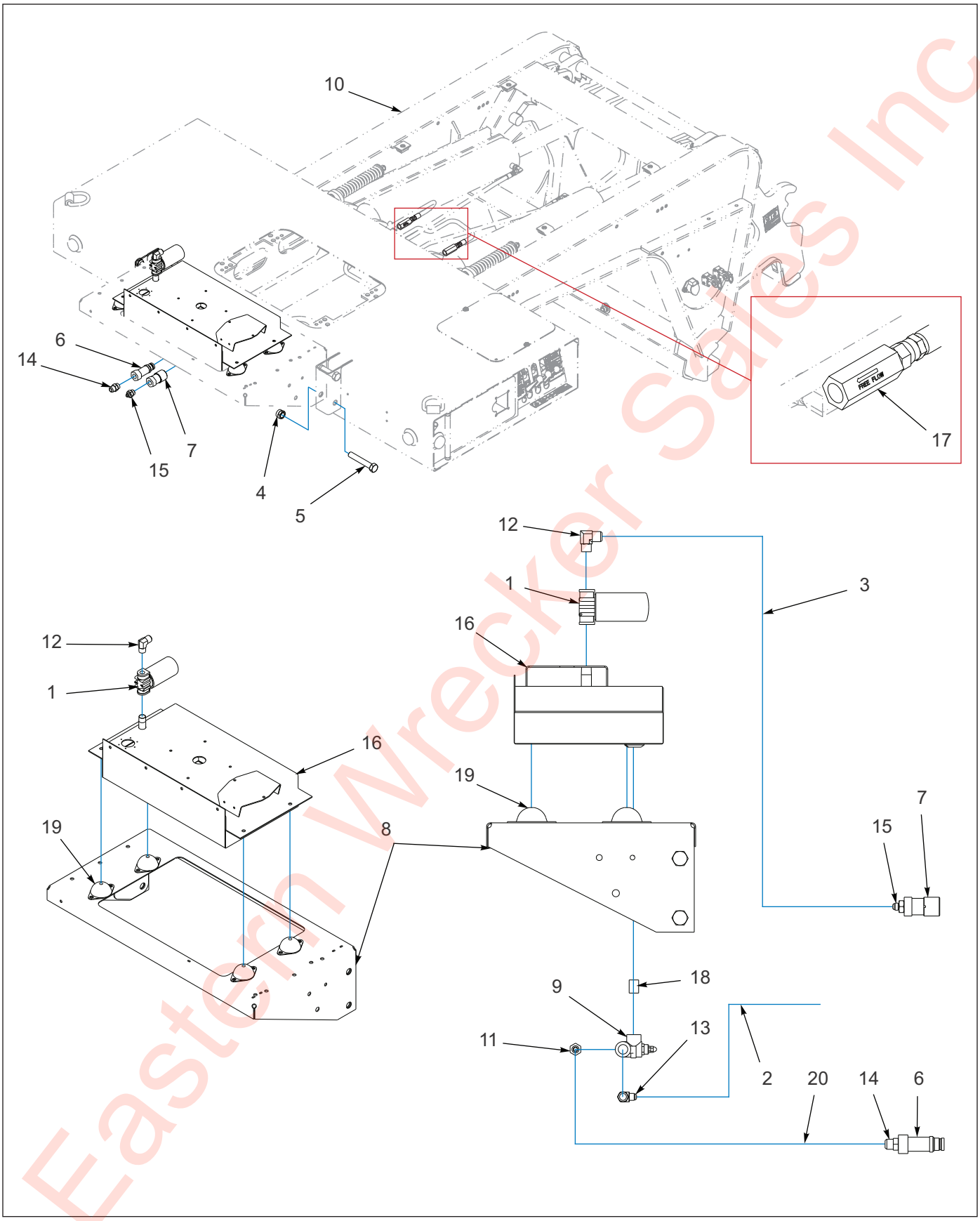

Figure 1-96: Front Engine Mount Installation

Eastern Wrecker Sales Inc

Front Engine Mount Installation

ITEM	PART NO.	DESCRIPTION	QTY.
	112172	ENGINE INSTALLATION FRONT MOUNT	
1	1-295-010001	RETURN LINE FILTER	REF
2	1-397-010301024	HOSE ASSEMBLY 1/2 X24	2
3	1-397-010305060	HOSE ASSEMBLY 3/4 X 60	1
4	1-512-010005-19	NUT, HEX LOCK 1-8 GRB	4
5	1-654-010065-17	SCREW, HEX HEAD CAP 1-8 X 6 GR5	4
6	105479	COUPLER FLAT FACE MALE NOSE	1
7	105480	COUPLER FLAT FACE FEMALE BODY	1
8	112184	MOUNT WELDMENT 11 HP FRONT ENGINE	1
9	125130	VALVE, HYDR PRESSURE RELIEF LW	1
10	-----	GOOSENECK ASSEMBLY	REF
11	2021-12-8S	ADAPTER STRAIGHT	1
12	2024-12-12S	ELBOW 90	REF
13	2024-12-8S	ELBOW 90	1
14	202702-12-12S	ADAPTER	1
15	202702-12-8S	ADAPTER	1
16	3-786-010033	TANK WELDMENT 5.5 GAL W/ ENG MOUNT	REF
17	3-846-010155	VALVE, RESTRICTOR **(NOT SHOWN)**	2
18	3/4NIPPLE	NIPPLE, ALL THREAD 3/4	1
19	CA-1595	MACHINE MOUNT 40 DUROMETER	REF
20	1-397-010302060	HOSE ASSEMBLY 1/2 X 60	1

Eastern Wrecker Sales Inc

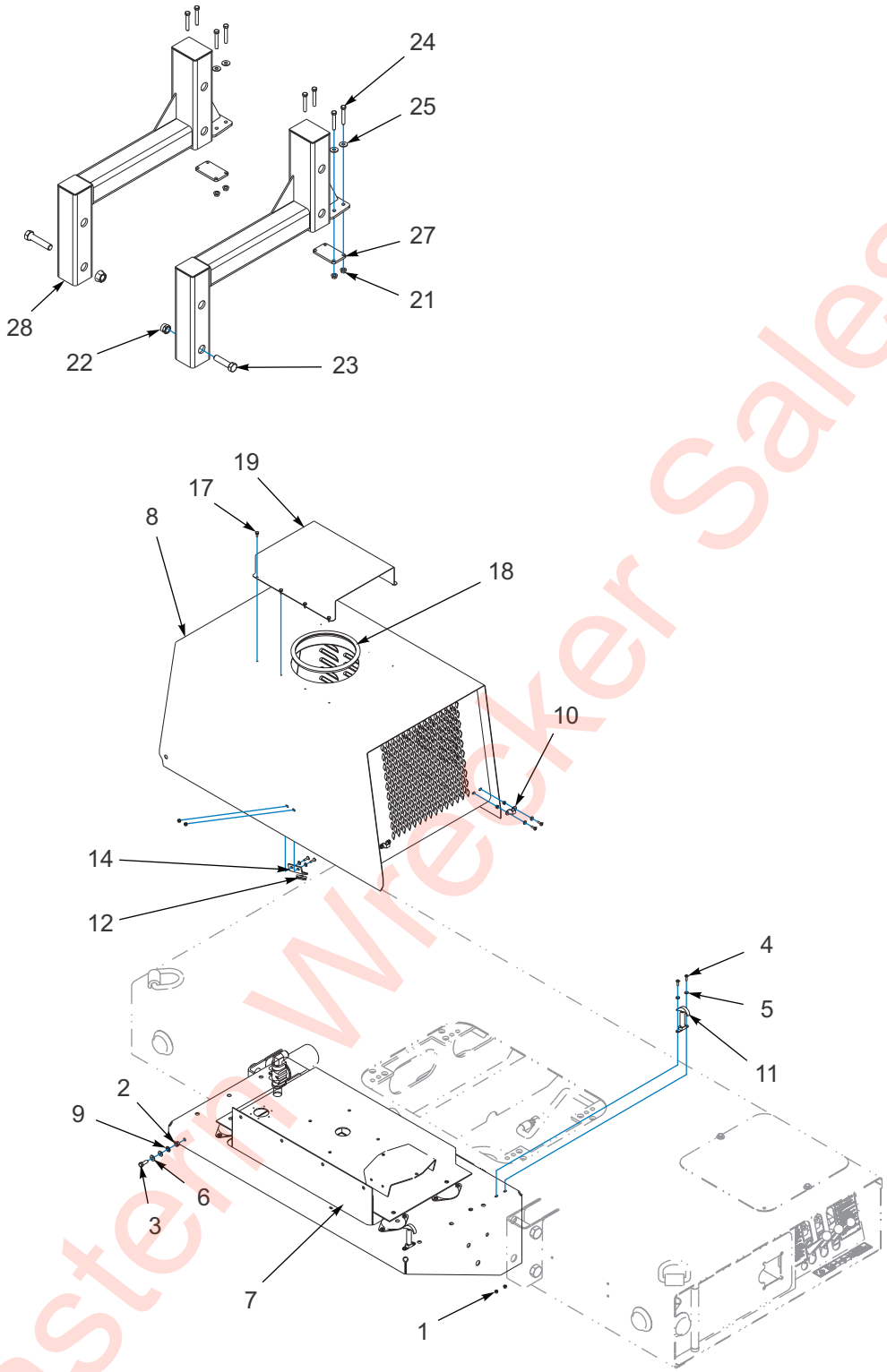

Figure 1-97: Front Engine Mount Cover Installation

Eastern Wrecker Sales Inc

Front Engine Mount Cover Installation

ITEM	PART NO.	DESCRIPTION	QTY.
	112174	COVER, INSTALLATION 11 HP FRONT MOUNT	
1	1-512-010004-03	NUT, HEX LOCK 10-24 GRA	10
2	1-512-010005-05	NUT, HEX LOCK 3/8-16 GRB	2
3	1-654-010051-05	SCREW, HEX HEAD CAP 3/8-16 X 1 GR5	2
4	1-656-010003051	SCREW, RD HEAD MACH #10-24 X 3/4	10
5	1-861-010032-03	WASHER, FLAT #10	10
6	1-861-010032-10	WASHER, FLAT 3/8N	2
7	112172	ENGINE INSTALLATION FRONT MOUNT **(SEE PAGE 1-174)**	REF
8	112175	COVER WELDMENT 11HP	1
9	112248	NYLON SHOULDER WASHER	4
10	231-4310	BRACKET, LATCHING	2
11	239-4899	LATCH, BATTERY COVER	2
12	1-343-010001	RUBBER GROMMET	1
13	10030	SEAL, BAR STOCK NEOPRENE SPNG **(NOT SHOWN)**	1
14	3-120-010463	BRACKET, HOOD STRAP	1
15	3-153-010024040	CABLE, VINYL COATED 1/8 X 40 **(NOT SHOWN)**	1
16	3-182-010034	CLAMP, 1/8 WIRE ROPE **(NOT SHOWN)**	4
17	118-7429	SCREW, SELF TAP HEX HEAD #10 X 1/2	8
18	114815	SEAL, SPONGE RUBBER TRIM	1
19	171441	SHIELD, ENGINE COVER TOP	1
20	1-397-010302042	HOSE ASSEMBLY, 1/2 X 42 **(NOT SHOWN)**	1
21	1-512-010005-03	NUT, HEX LOCK 5/16-18 GRB	8
22	1-512-010005-19	NUT, HEX LOCK 1-8 GRB	2
23	1-654-010065-17	SCREW, HEX HEAD CAP 1-8 X 6 GR5	2
24	1-654-010121-06	SCREW, HEX SOCKET CTSK 5/16-18 X 1-1/4	8
25	1-861-010032-09	WASHER, FLAT 5/16W	8
26	105276	HOSE ASSEMBLY, 3/4 X 52 **(NOT SHOWN)**	1
27	110996	PAD, SWING REST BOTTOM	2
28	118006	MOUNT WELDMENT ENG PKG 825 DECK	2

Eastern Wacker Sales Inc

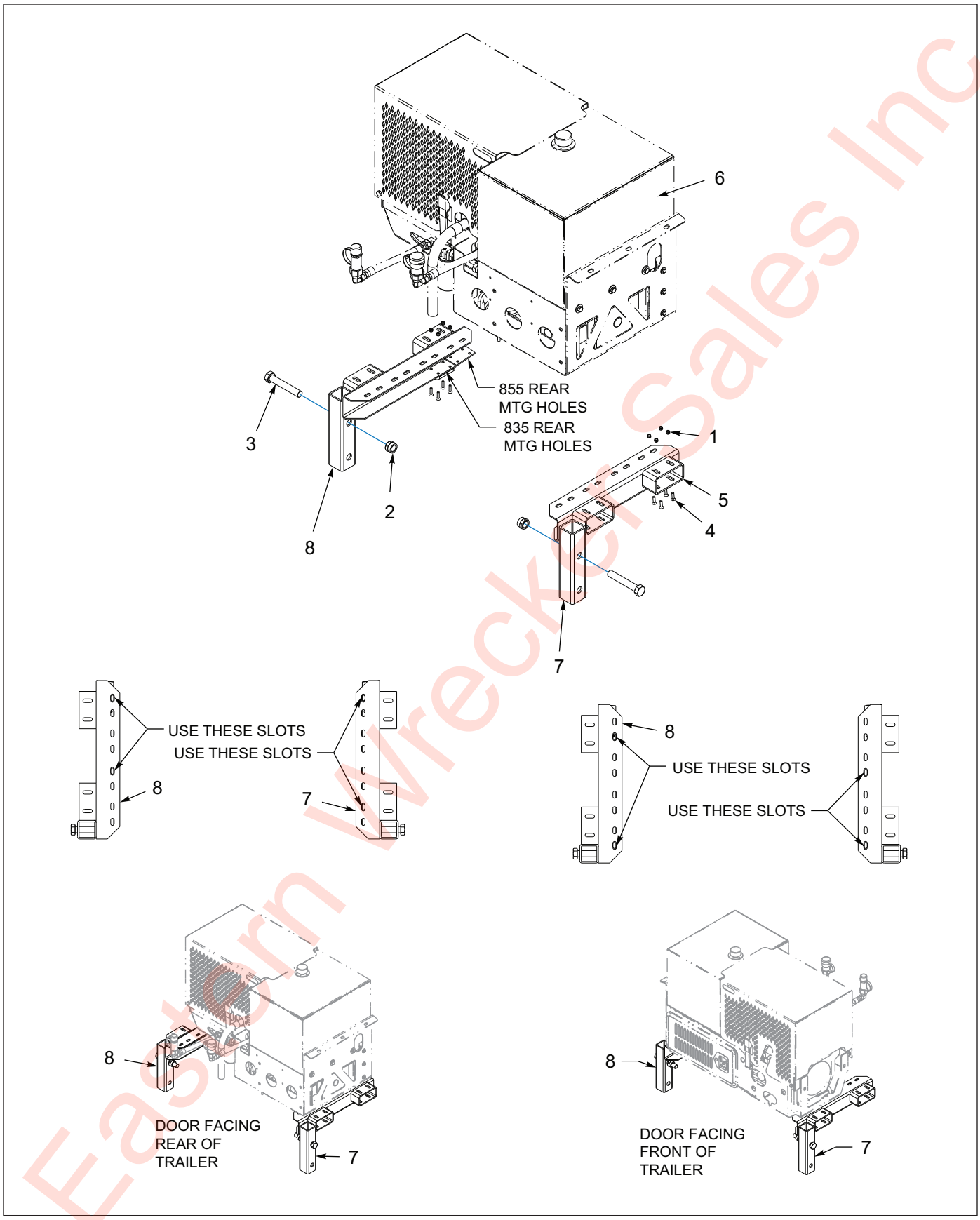

Figure 1-98: 800 Engine Mount Installation

Eastern Wrecker Sales Inc

800 Engine Mount Installation

ITEM	PART NO.	DESCRIPTION	QTY.
	178434	MOUNT INSTL ENG PKG 800	
1	1-512-010005-03	NUT HEX SLFLKG GRB 5/16-18	8
2	1-512-010005-19	NUT 1-8 HEX SLF-LOCKING GRB	2
3	1-654-010065-17	SCREW, HEX CAP, 1-8UNCX6, GR5	2
4	1-654-010121-06	SCREW HEX SKT CTSK,5/16X1-1/4	8
5	110996	PAD SWING REST BOTTOM	2
6	-----	27 HP ENGINE	REF
7	178435	MOUNT WLDMT LH ENG PKG	1
8	178436	MOUNT WLDMT RH ENG PKG	1

Eastern Wrecker Sales Inc

Fender Assemblies - Option

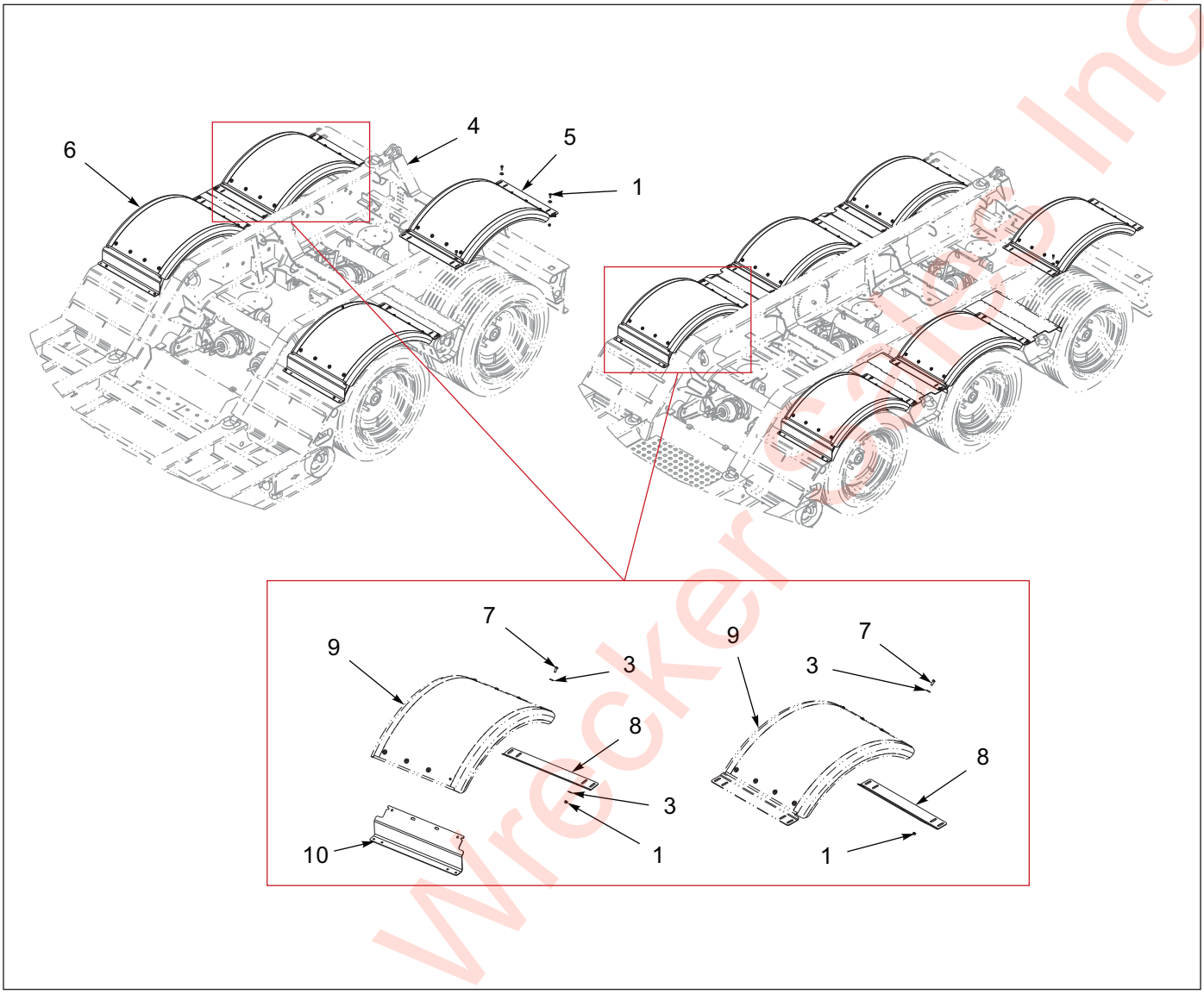

Figure 1-99: Black Poly Fender Installation - 2 & 3 Axle

Black Poly Fender Installation - 2 & 3 Axle

ITEM	PART NO.	DESCRIPTION	QTY.
	171975	BLACK POLY FENDER INSTALLATION, 2 AXLE	
1	1-512-010005-05	NUT, HEX LOCK 3/8-16 GRB	20
2	1-654-010051-05	SCREW, HEX HEAD CAP 3/8-16 X 1 GR5	12
3	1-861-010032-11	WASHER, FLAT 3/8W	28
4	-----	FRAME ASSEMBLY	REF
5	174020	FENDER SUB-ASSEMBLY, BLACK POLY **(ITEMS 1,3, & 7-9)**	2
6	174021	FENDER SUB-ASSEMBLY, FRONT BLACK POLY **(ITEMS 1, 3, & 7-10)**	2
7	108336	SCREW, BUTTON HEAD CAP 3/8-16 X 1	8
8	171984	BRACKET MOUNTING, FENDER	1
9	174019	FENDER, MODIFIED BLACK POLY DUAL	1
10	174022	BRACKET MOUNTING, FRONT FENDER	1

Eastern Wrecker Sales Inc

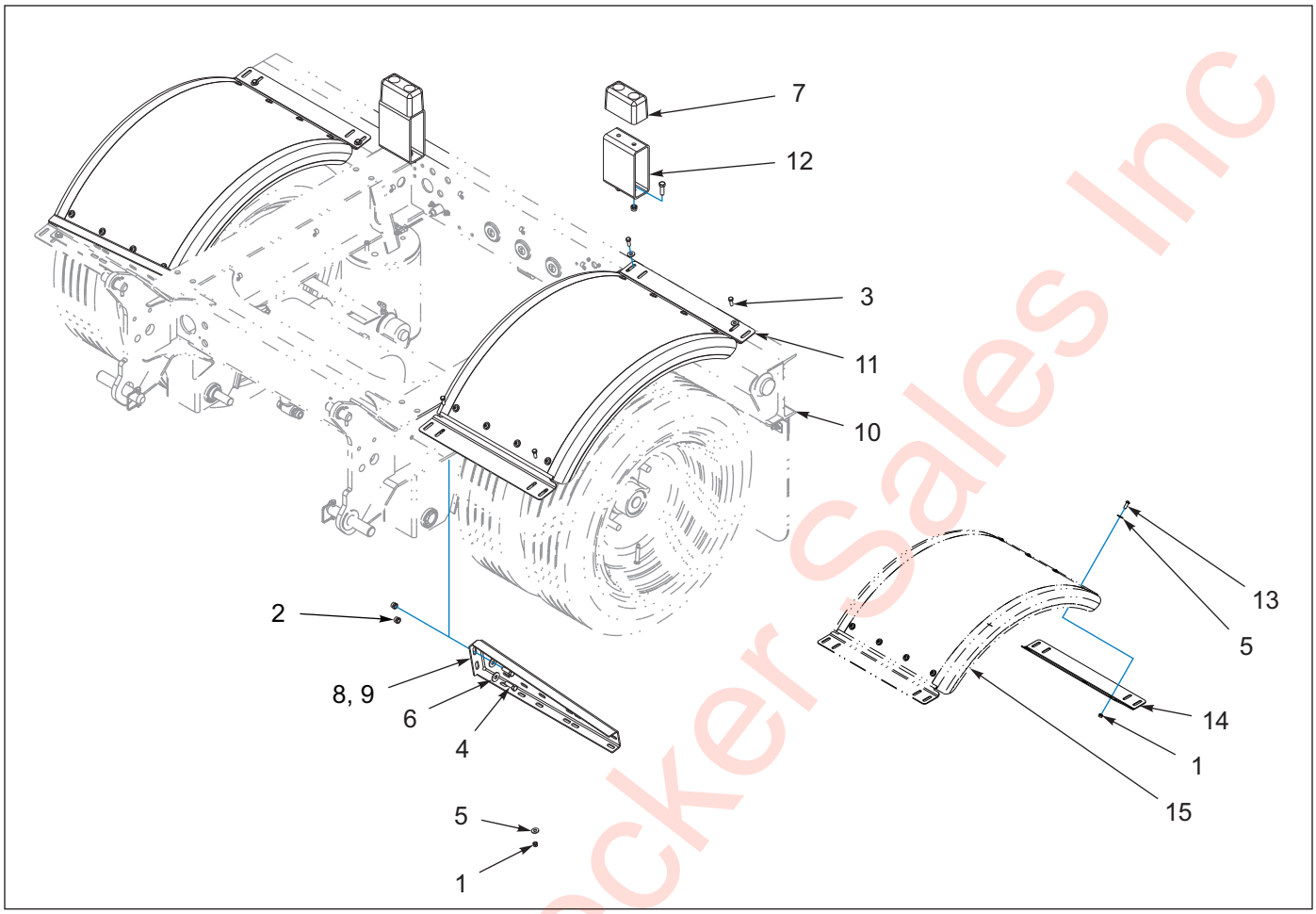

Figure 1-100: Black Poly Fender Installation - Flip Axle

Black Poly Fender Installation - Flip Axle

ITEM	PART NO.	DESCRIPTION	QTY.
	171977	BLACK POLY FENDER INSTALLATION, FLIP AXLE	
1	1-512-010005-05	NUT, HEX LOCK 3/8-16 GRB	AR
2	1-512-010005-09	NUT, HEX LOCK 1/2-13 GRB	8
3	1-654-010051-05	SCREW, HEX HEAD CAP 3/8-16 X 1 GR5	8
4	1-654-010055-03	SCREW, HEX HEAD CAP 1/2-13 X 1-1/2 GR5	8
5	1-861-010032-11	WASHER, FLAT 3/8W	AR
6	1-861-010032-15	WASHER, FLAT 1/2W	4
7	128874	BUMPER, RUBBER 6 X 3 X 3-1/2	REF
8	143670	MOUNT, FENDER/ MUD FLAP RH	1
9	143671	MOUNT, FENDER/ MUD FLAP LH	1
10	-----	FLIP ASSEMBLY	REF
11	174020	FENDER SUB-ASSEMBLY, BLACK POLY **(ITEMS 1, 3, & 13-16)**	2
12	174027	SUPPORT WELDMENT, FLIP AXLE	2
13	108336	SCREW, BUTTON HEAD CAP 3/8-16 X 1	AR
14	171984	BRACKET MOUNTING, FENDER	4
15	174019	FENDER, MODIFIED BLACK POLY DUAL	2
16	174022	BRACKET MOUNTING, FRONT FENDER	2

Eastern Wrecker Sales Inc

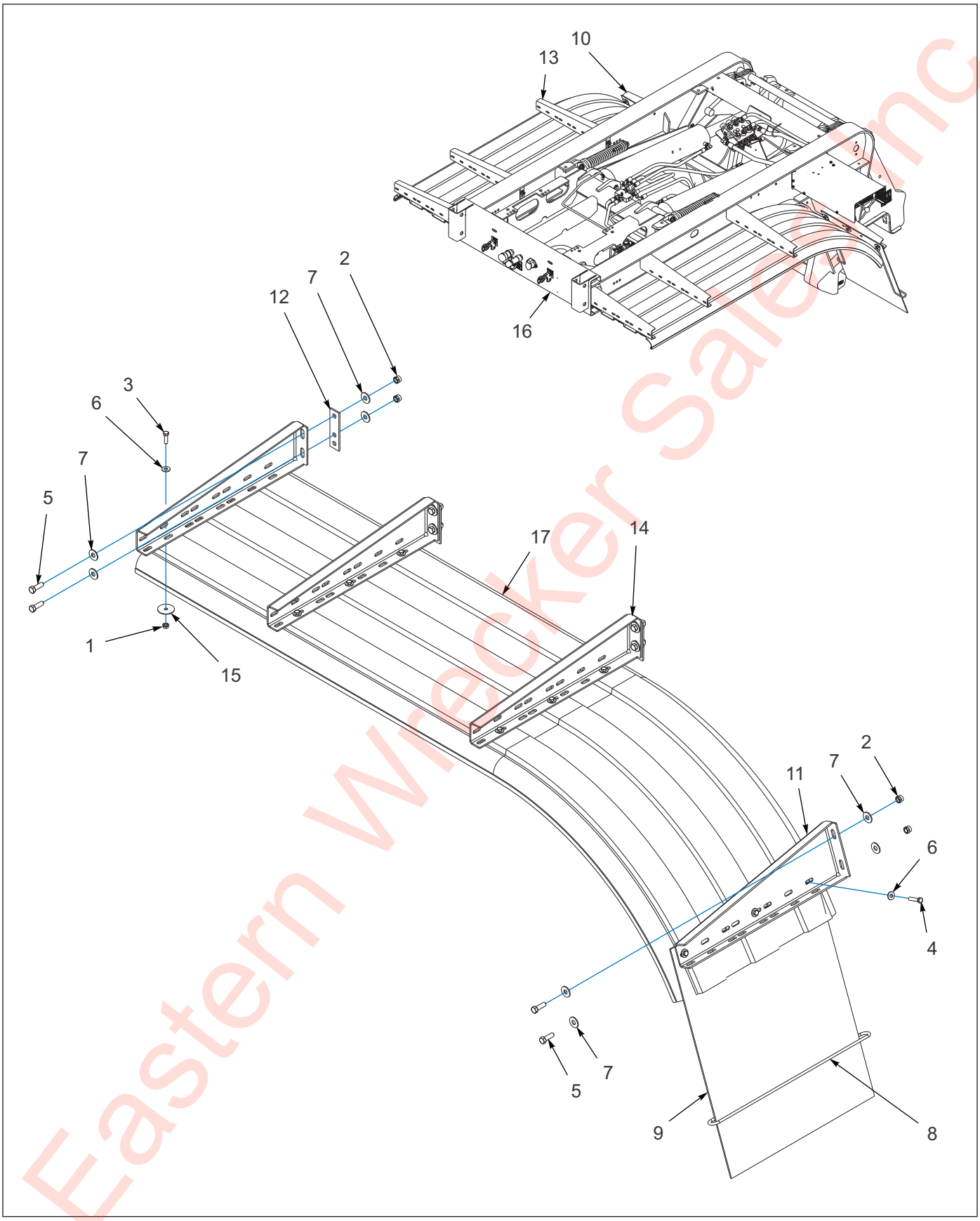

Figure 1-101: Gooseneck Fender Assembly

Eastern Wrecker Sales Inc

Gooseneck Fender Assembly

ITEM	PART NO.	DESCRIPTION	QTY.
	172298	FENDER ASSEMBLY, G/N PLASTIC 12’ G/N	
	174545	FENDER ASSEMBLY, G/N 10’-9” G/N	
1	1-510-010001	NUT, FLANGE LOCK 3/8-16	24
2	1-512-010005-09	NUT, HEX LOCK 1/2-13 GRB	16
3	1-654-010051-06	SCREW, HEX HEAD CAP 3/8-16 X 1-1/4 GR5	18
4	1-654-010051-08	SCREW, HEX HEAD CAP 3/8-16 X 1-3/4 GR5	6
5	1-654-010055-03	SCREW, HEX HEAD CAP 1/2-13 X 1-1/2 GR5	16
6	1-861-010032-11	WASHER, FLAT 3/8W	24
7	1-861-010032-15	WASHER, FLAT 1/2W	32
8	128886	BRACKET, ANTI-SAIL MUD FLAP	2
9	131195	MUD FLAP, BLACK POLYMER 24 X 30	2
10	136870	MOUNT, FENDER/ MUD FLAP RH	1
11	136871	MOUNT, FENDER/ MUD FLAP LH	1
12	136908	DOUBLER FENDER MOUNTING	6
13	143670	MOUNT, FENDER/MUD FLAP RH	3
14	143671	MOUNT, FENDER/MUD FLAP LH	3
15	159522	WASHER, FLAT	24
16	-----	GOOSENECK ASSEMBLY	REF
17	147304	FENDER, PLASTIC 26-3/8 X 105 12’ G/N	1
17	174546	FENDER, MOD 10’-9” G/N	1

Eastern Wrecker Sales Inc

Lift Assemblies - Option

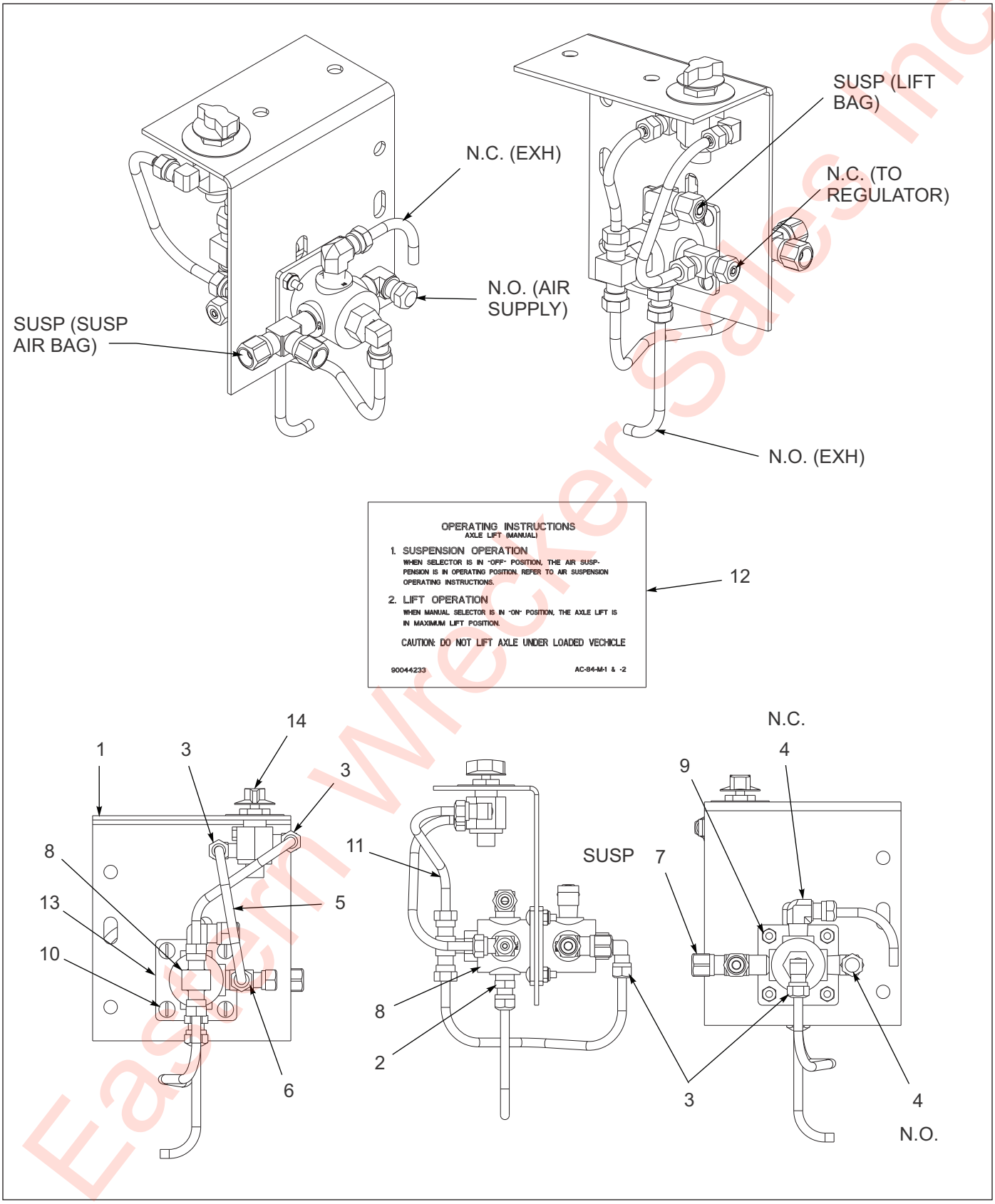

Figure 1-102: Lift Axle Flip Control Assembly (835)

Eastern Wrecker Sales Inc

Lift Axle Flip Control Assembly (835)

ITEM	PART NO.	DESCRIPTION	QTY.
	140369	CONTROL ASSEMBLY, LIFT AXLE - FLIP	
1	112324	PLATE, MOUNTING AIR LIFT KIT	1
2	1-297-010007-05	FITTING, AIR	1
3	1-297-010008-05	FITTING, AIR 90	3
4	1-297-010008-07	FITTING, AIR 90	2
5	1-297-010008-18	FITTING, AIR 90	1
6	1-297-010011-02	FITTING, AIR M/RUN TEE	1
7	1-297-010011-04	FITTING, AIR M/RUN TEE	1
8	1-297-010015-02	FITTING, AIR BR TEE	1
9	1-512-010003-06	NUT, HEX LOCK #10-24	4
10	1-656-010003051	SCREW, RD HEAD MACH #10-24 X 3/4	4
11	1-833-010001	TUBING, NYLON 1/4OD	AR
12	-----	DECAL, AXLE LIFT OPERATING INSTRUCTIONS	REF
13	900-54-079	PILOT VALVE	2
14	900-54-088	VALVE, AIR RIDE CONTROL	REF

Eastern Wrecker Sales Inc

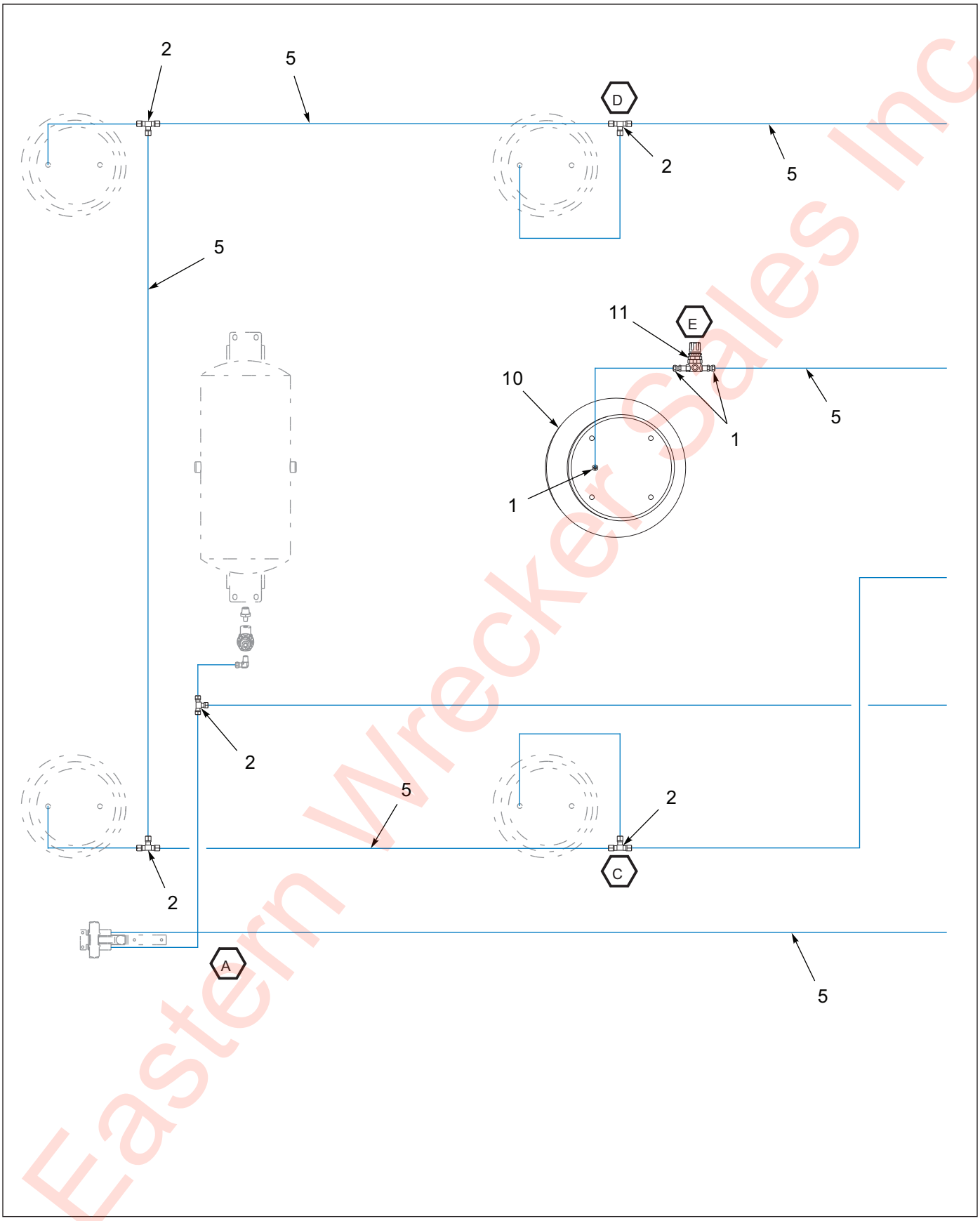

Figure 1-103: Lift Control Installation - 3rd Raise/Lower (1 of 2)

Eastern Wrecker Sales Inc

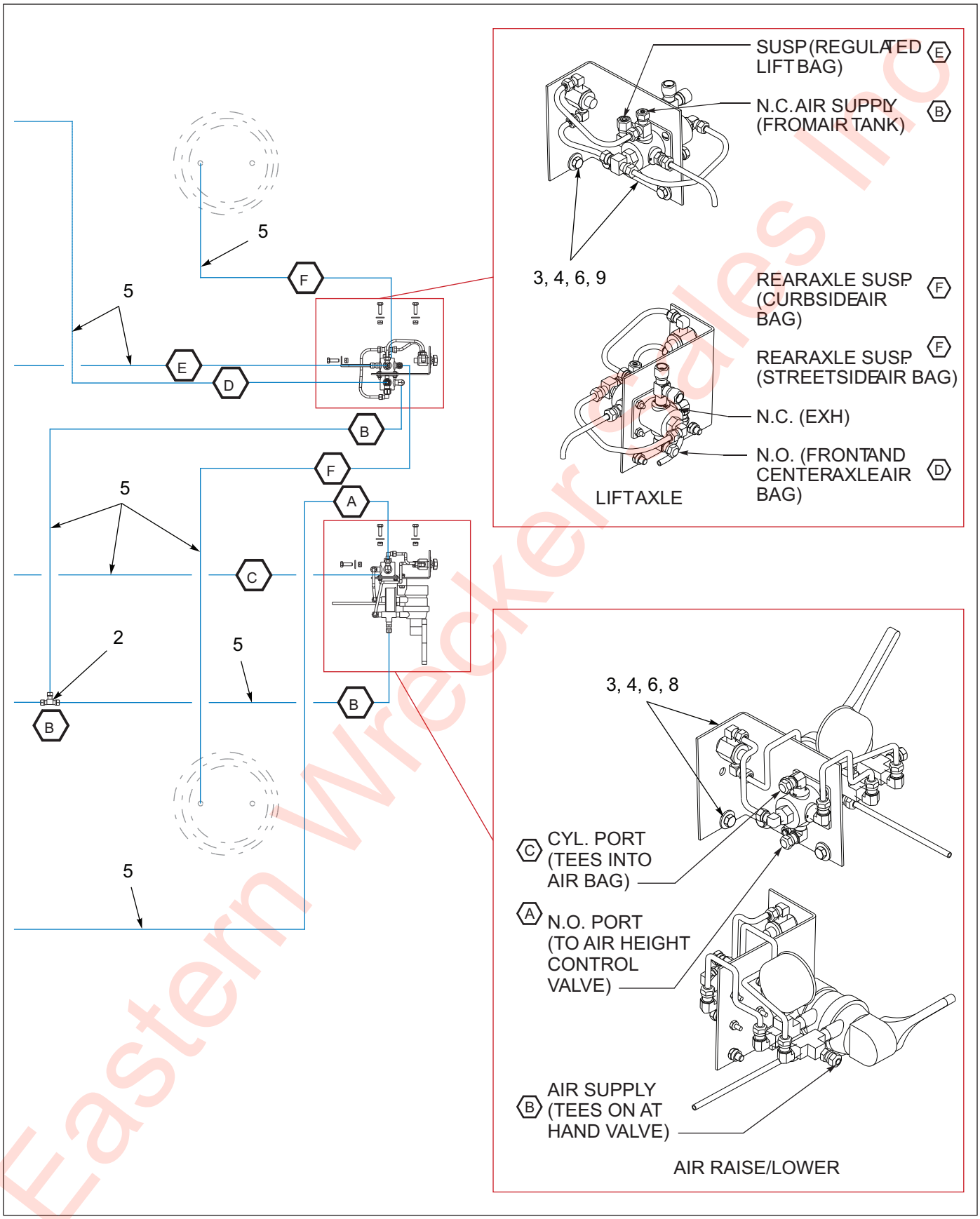

Figure 1-104: Lift Control Installation - 3rd Raise/Lower (2 of 2)

Eastern Wrecker Sales Inc

Lift Control Installation - 3rd Raise/Lower (835)

ITEM	PART NO.	DESCRIPTION	QTY.
	144937	LIFT CONTROL INSTALLATION, 3RD R/L	
1	1-297-010007-05	FITTING, AIR	3
2	1-297-010010-01	FITTING, AIR UNION TEE	2
3	1-512-010005-03	NUT, HEX LOCK 5/16-18 GRB	6
4	1-654-010049-05	SCREW, HEX HEAD CAP 5/16-18 X 1 GR5	6
5	1-833-010001	TUBING, NYLON 1/4 OD	AR
6	1-861-010032-09	WASHER, FLAT 5/16W	6
7	112193	AIR RIDE PLUMBING INSTALLATION	REF
8	112326	CONTROL ASSEMBLY, AIR R/L **(SEE PAGE 1-109)**	1
9	140369	CONTROL ASSEMBLY, LIFT AXLE - FLIP **(SEE PAGE 1-187)**	1
10	-----	FRAME ASSEMBLY, MOD LIFT 3RD AXLE	REF
11	164087	AIR SPRING ASSEMBLY	REF
12	164092	VALVE REGULATOR ASSEMBLY	REF

Eastern Wrecker Sales Inc

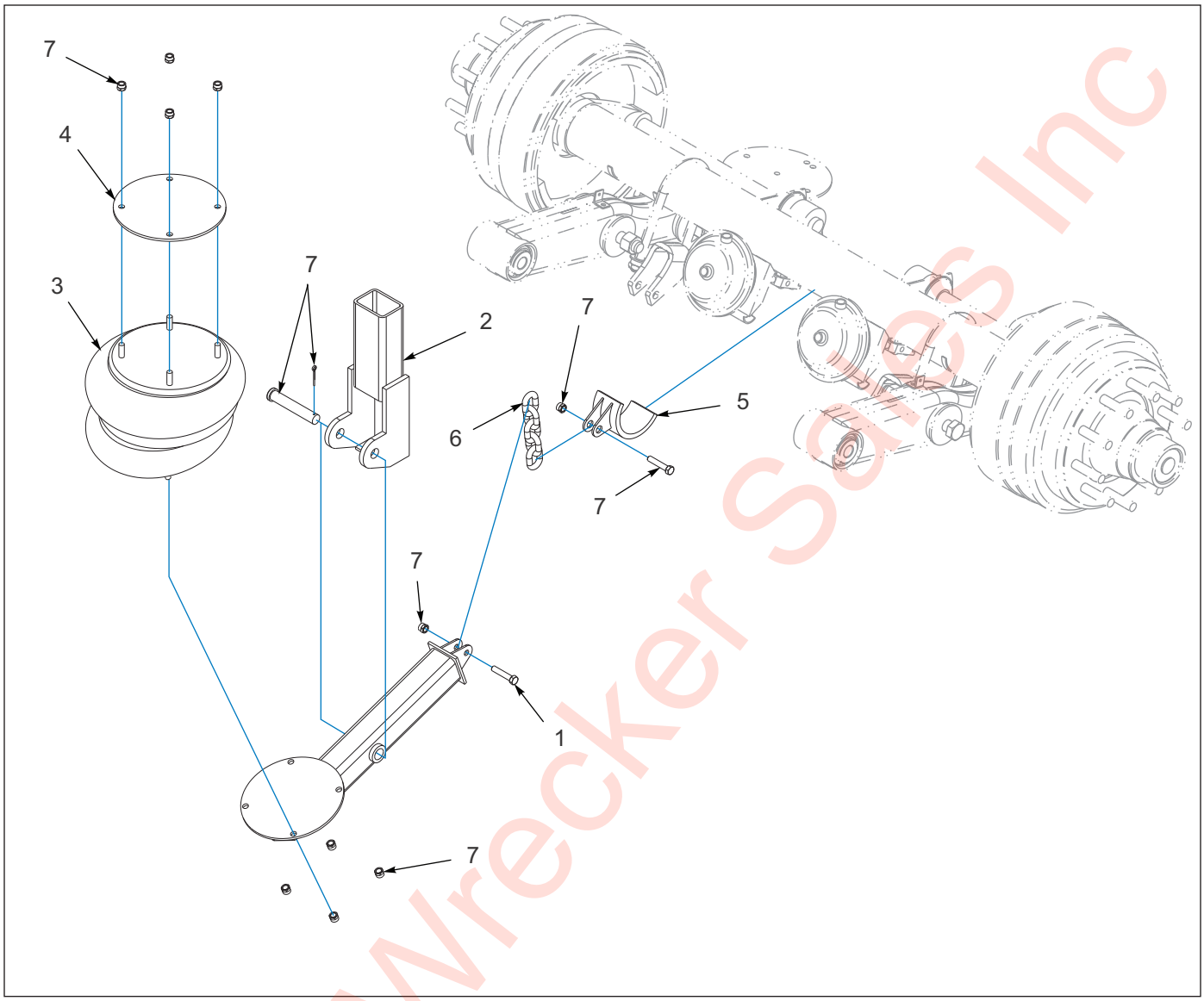

Figure 1-105: Rear Suspension Air Lift Assembly

Rear Suspension Air Lift Assembly

ITEM	PART NO.	DESCRIPTION	QTY.
	140450	REAR SUSPENSION AIR LIFT ASSEMBLY	
1	161825	BEAM LIFT BRACKET	1
2	161830	ANCHOR WELDMENT AXLE LIFT PIVOT	1
3	164087	AIR SPRING	1
4	164088	PLATE, AIR SPRING MOUNTING	1
5	161833	AXLE WELDMENT, AXLE LIFT	1
6	164090	CHAIN	1
7	164091	FASTENER KIT	1
8	164092	VALVE REGULATOR ASSEMBLY **(NOT SHOWN)**	1
9	164093	CENTER BAG LIFT - LITERATURE KIT **(NOT SHOWN)**	1

Eastern Wrecker Sales Inc

Light Installations - Options

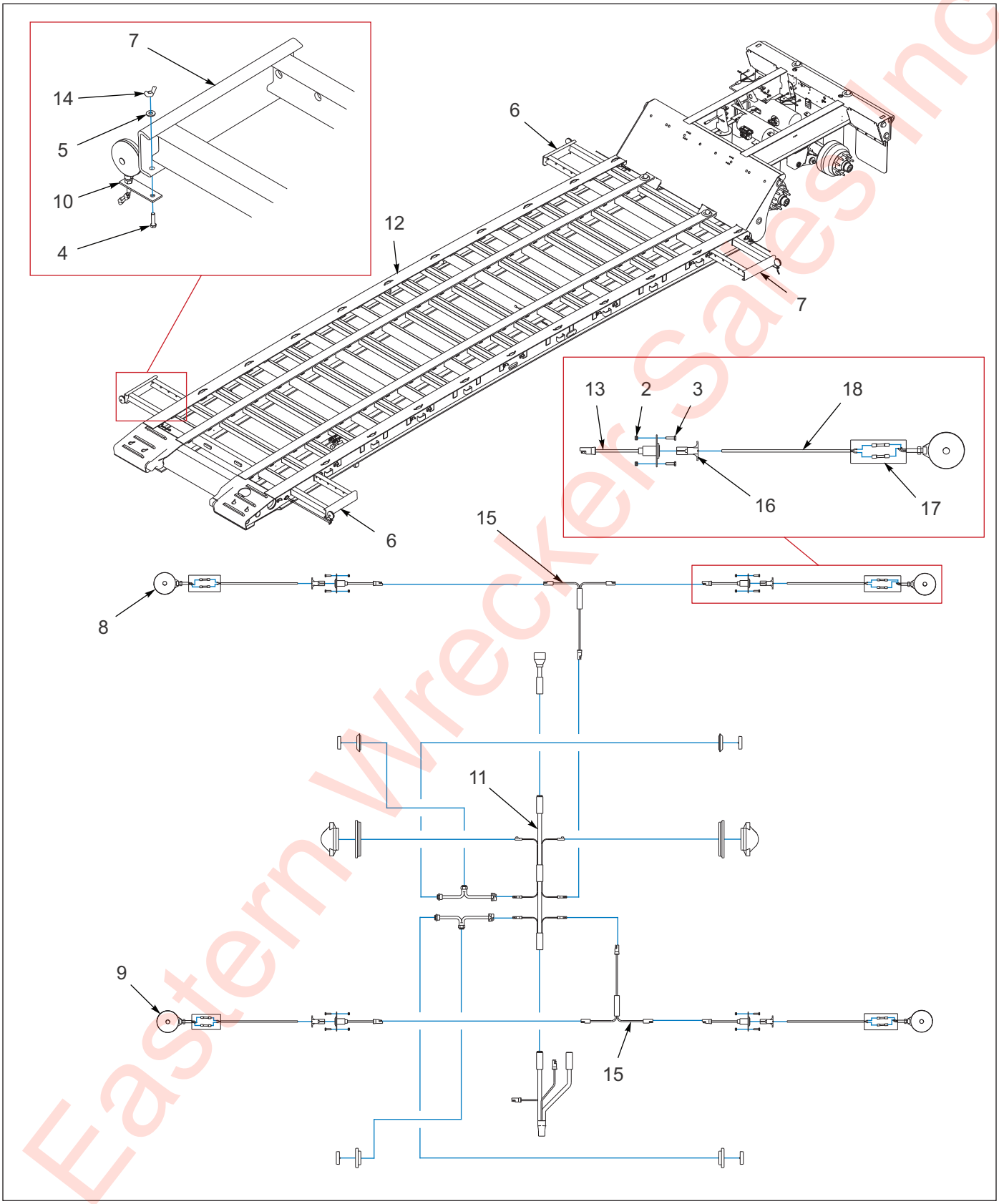

Figure 1-106: Pullout Extension Mounted Light Package

Eastern Wrecker Sales Inc

Pullout Extension Mounted Light Package

ITEM	PART NO.	DESCRIPTION	QTY.
	146931	PULLOUT EXTENSION MNTD LIGHT PACKAGE	
1	0013007	TUBING, HEAT SHRINK	AR
2	1-512-010005-01	NUT, HEX LOCK 1/4-20 GRB	8
3	1-654-010047-06	SCREW, HEX HEAD CAP 1/4-20 X 1 GR5	8
4	1-654-010051-07	SCREW, HEX HEAD CAP 3/8-16 X 1-1/2 GR5	4
5	1-861-010032-11	WASHER, FLAT 3/8W	8
6	112598	PULL-OU0T ASSEMBLY, RH	REF
7	112599	PULL-OUT ASSEMBLY, LH	REF
8	129893	LAMP, YELLOW TURN SIGNAL STUD MOUNT	2
9	129894	LAMP, RED TURN SIGNAL STUD MOUNT	2
10	129895	BRACKET, LAMP MOUNTING PULLOUT EXT	4
11	143102	HARNESS, MAIN	2
12	-----	FRAME WELDMENT	REF
13	150116	PIGTAIL MAKER	4
14	155628	NUT, WING 3/8-16	4
15	167965	HARNESS, JUMPER T-POWER	2
16	3-272-010010	CONNECTOR ELECT 4 POLE MALE	4
17	3-272-010021	ELECT BUTT SPLICE 16/14 W/ SEAL	8
18	W214S-1	CABLE, 2 WIRE 14AWG PVC JACKET	AR

Eastern Wrecker Sales Inc

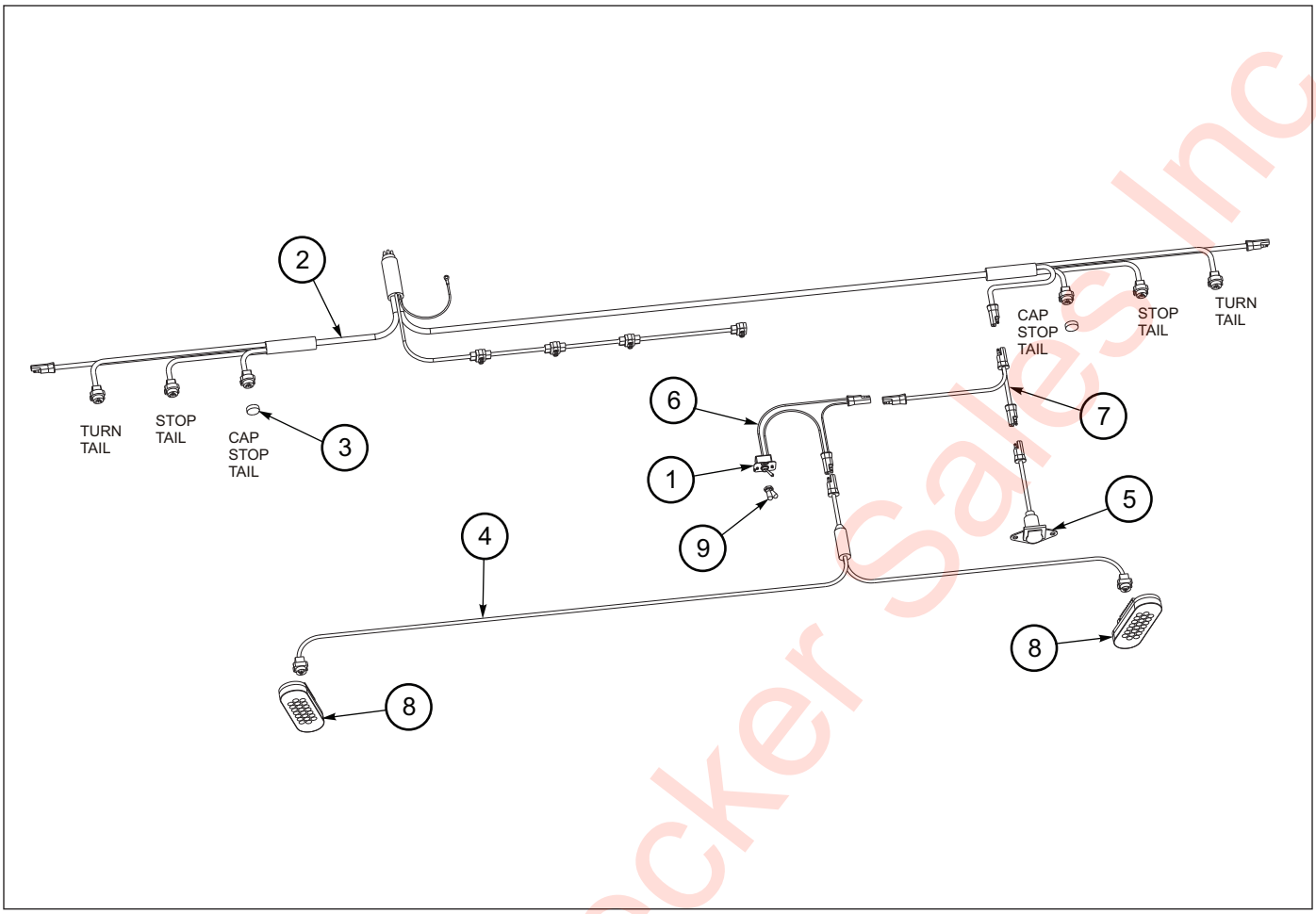

Figure 1-107: Strobe Light - 800E Bumper

Strobe Light - 800E Bumper

ITEM	PART NO.	DESCRIPTION	QTY.
	199131	STROBE 800E BUMPER GROTE	
1	130116	DECAL, ON/OFF LIGHT	1
2	143104	HARNESS BUMPER GROTE	REF
3	144608	DUMMY PLUG FOR FEMALE PLUG	2
4	150114	HARNESS BUMPER STROBE GROTE	1
5	150116	HARNESS ASSY RCPT 800	REF
6	150117	SWITCH ASSY LIGHT GROTE	1
7	150118	HARNESS JUMPER BRANCH	1
8	187869	LIGHT STROBE YEL CLEAR LENS GR	2
9	81264	RUBBER BOOT FOR ELECT SWITCH	1

Eastern Wrecker Sales Inc

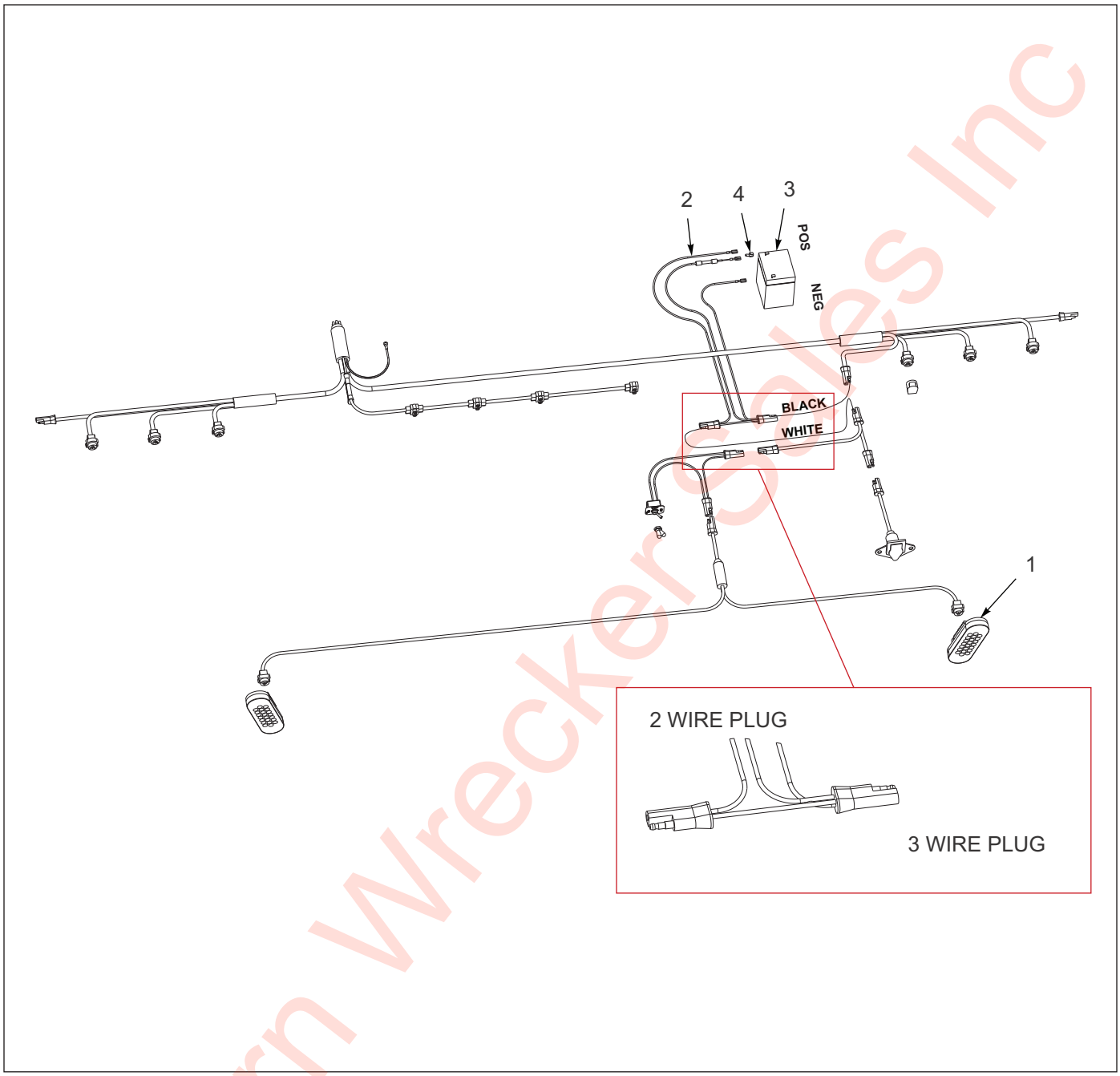

Figure 1-108: Strobe Light - Battery Backup Bumper

Strobe Light - Battery Backup Bumper

ITEM	PART NO.	DESCRIPTION	QTY.
	169830	BATTERY BACKUP BUMPER STROBE LT **(FRAME INSTALL ONLY)**	
1	155107	BUMPER STROBE LIGHT	REF
2	156069	HARNESS ASSEMBLY, JUMPER TRIC CHG	1
3	3-128-010032	BATTERY BRAKE-AWAY	1
4	3-272-010157	ELECT ADAPTER CHAIR 1/4 PUSH ON	1

Eastern Wrecker Sales Inc

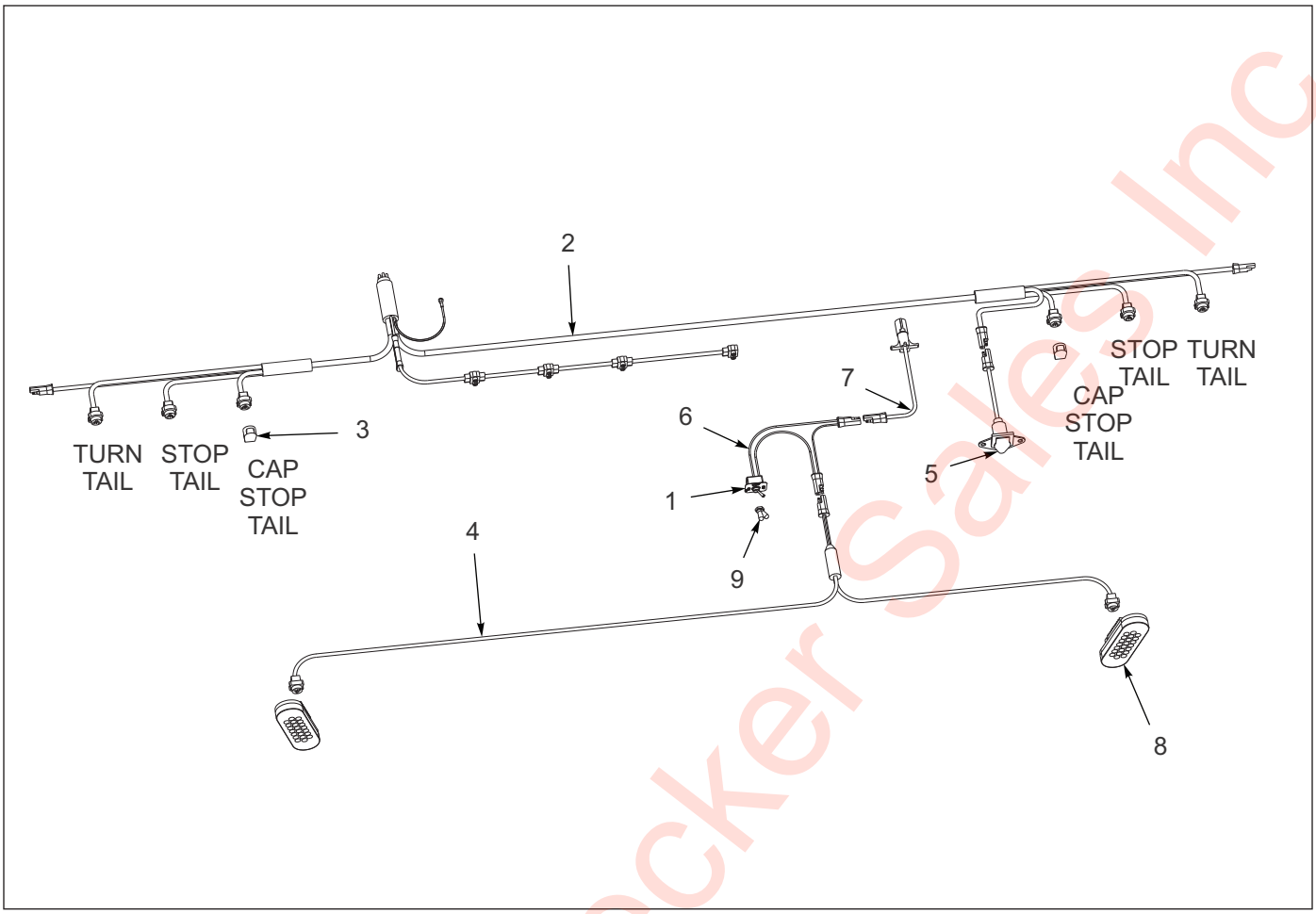

Figure 1-109: Strobe Light - Flip Axle Installation

Strobe Light - Flip Axle Installation

ITEM	PART NO.	DESCRIPTION	QTY.
	199129	STROBE, BUMPER, FLIP AXLE	
1	130116	DECAL, ON/OFF LIGHT	1
2	143104	HARNESS BUMPER GROTE	REF
3	144608	DUMMY PLUG FOR FEMALE PLUG	2
4	150114	HARNESS BUMPER STROBE GROTE	1
5	150116	HARNESS ASSY RCPT 800	REF
6	150117	SWITCH ASSY LIGHT GROTE	1
7	174071	HARNESS POWERFLIP STROBE	1
8	187869	LIGHT STROBE YEL CLEAR LENS GR	2
9	81264	RUBBER BOOT FOR ELECT SWITCH	1

Eastern Wrecker Sales Inc

Table provided for general use.

NOTES:

Eastern Wrecker Sales Inc

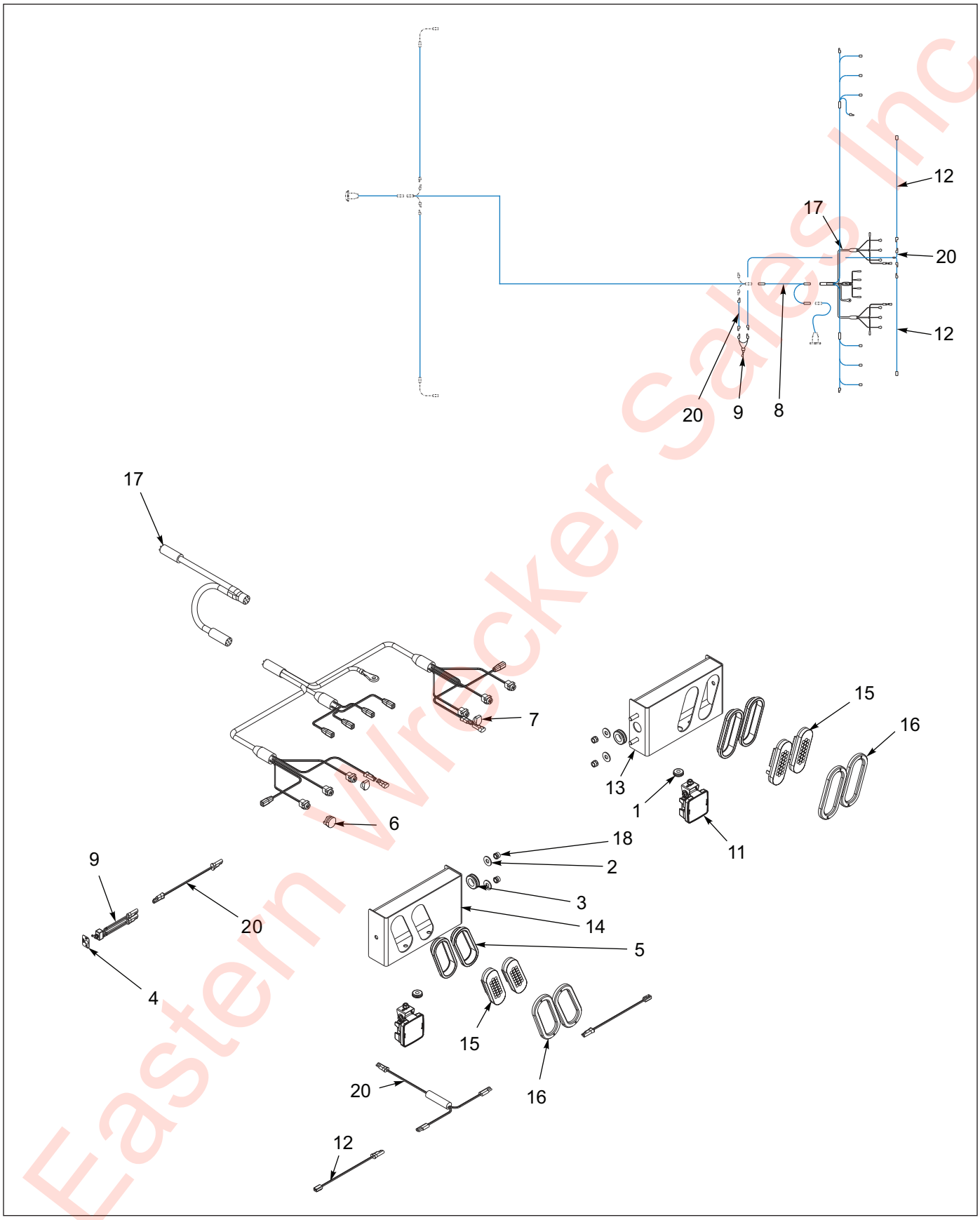

Figure 1-110: S/T/T Light Installation (800E)

Eastern Wrecker Sales Inc

S/T/T Light Installation (800E)

ITEM	PART NO.	DESCRIPTION	QTY.
	199717	LIGHT ASSY S/T/T 800E	
1	1-343-010001	GROMMET RUB 1-3/8ODX3/4IDX1/8	2
2	1-512-010005-09	NUT,HEX,SLFLKG, 1/2-13 GRB	4
3	1-861-010032-15	WASHER, FLAT 1/2 W ZP/CD	4
4	130116	DECAL, ON/OFF LIGHT	1
5	143114	GROMMET OVAL GROTE **(BEFORE 01/02/20)**	4
6	143121	DUMMY PLUG MALE/FEM BULLET	1
7	144608	DUMMY PLUG FOR FEMALE PLUG	2
8	146929	HARNESS Y SPLITTER GROTE	1
9	150117	SWITCH ASSY LIGHT GROTE	1
10	-----	GOOSENECK ASSY 855-12'-5" **(NOT SHOWN)**	REF
11	163996	LIGHT,12V SQUARE LED FLOOD	2
12	164052	HARNESS,60"BRANCH,WORK LIGHT	2
13	168712	MOUNT WLDMT RH S/T/T	1
14	168713	MOUNT WLDMT LH S/T/T	1
15	179902	LIGHT S/T/T RED CLEAR LENS GRT **(BEFORE 01/02/20)**	4
15	213295	LIGHT S/T/T RED CLEAR LENS GRT **(AFTER 01/02/20)**	4
16	180570	COVER CHROME OBLONG GROMMET **(BEFORE 01/02/20)**	4
16	213296	COVER CHROME OBLONG GROMMET **(AFTER 01/02/20)**	4
17	187859	HARNESS BUMPER MICRONOVA GROTE	1
18	237-2308-012	GROMMET, 1.125 ID	2
19	43029	HOSE WRAP AEROQUIP 1/4 **(NOT SHOWN)**	3
20	169853	HARNESS T PWR BRANCH	1

Eastern Wrecker Sales Inc

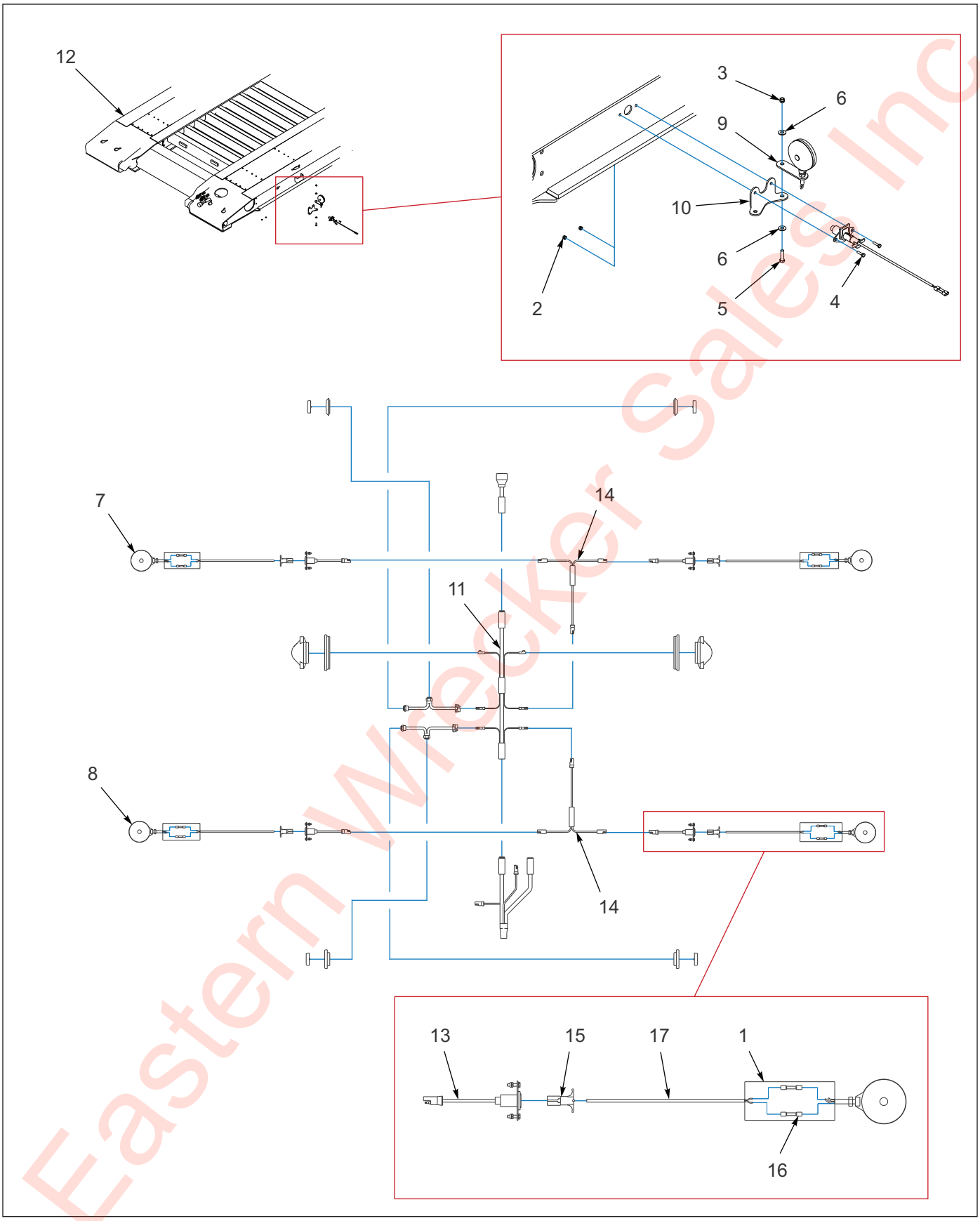

Figure 1-111: Web Mounted Four Corner Light Package

Eastern Wrecker Sales Inc

Web Mounted Four Corner Light Package

ITEM	PART NO.	DESCRIPTION	QTY.
	146932	WEB MOUNTED FOUR CORNER LIGHT PACKAGE	
1	0013007	TUBING, HEAT SHRINK	1
2	1-512-010005-01	NUT, HEX LOCK 1/4-20 GRB	8
3	1-512-010005-05	NUT, HEX LOCK 3/8-16 GRB	4
4	1-654-010047-06	SCREW, HEX HEAD CAP 1/4-20 X 1 GR5	8
5	1-654-010051-07	SCREW, HEX HEAD CAP 3/8-16 X 1-1/2 GR5	4
6	1-861-010032-11	WASHER, FLAT 3/8W	8
7	129893	LAMP, YELLOW TURN SIGNAL STUD MOUNT	2
8	129894	LAMP, RED TURN SIGNAL STUD MOUNT	2
9	139132	BRACKET, LAMP MOUNTING SWING	4
10	139133	BRACKET, LAMP MOUNTING STATIONARY	4
11	143102	HARNESS, MAIN	REF
12	-----	FRAME WELDMENT	REF
13	150116	PIGTAIL MARKER	4
14	167965	HARNESS, JUMPER T-POWER	2
15	3-272-010010	CONNECTOR, ELECT 4 POLE MALE	4
16	3-272-010021	ELECT BUTT SPLICE 16/14 W/ SEAL	8
17	W214S-1	CABLE, 2 WIRE 14AWG PVC JACKET	AR

Eastern Wrecker Sales Inc

Ramps - Options

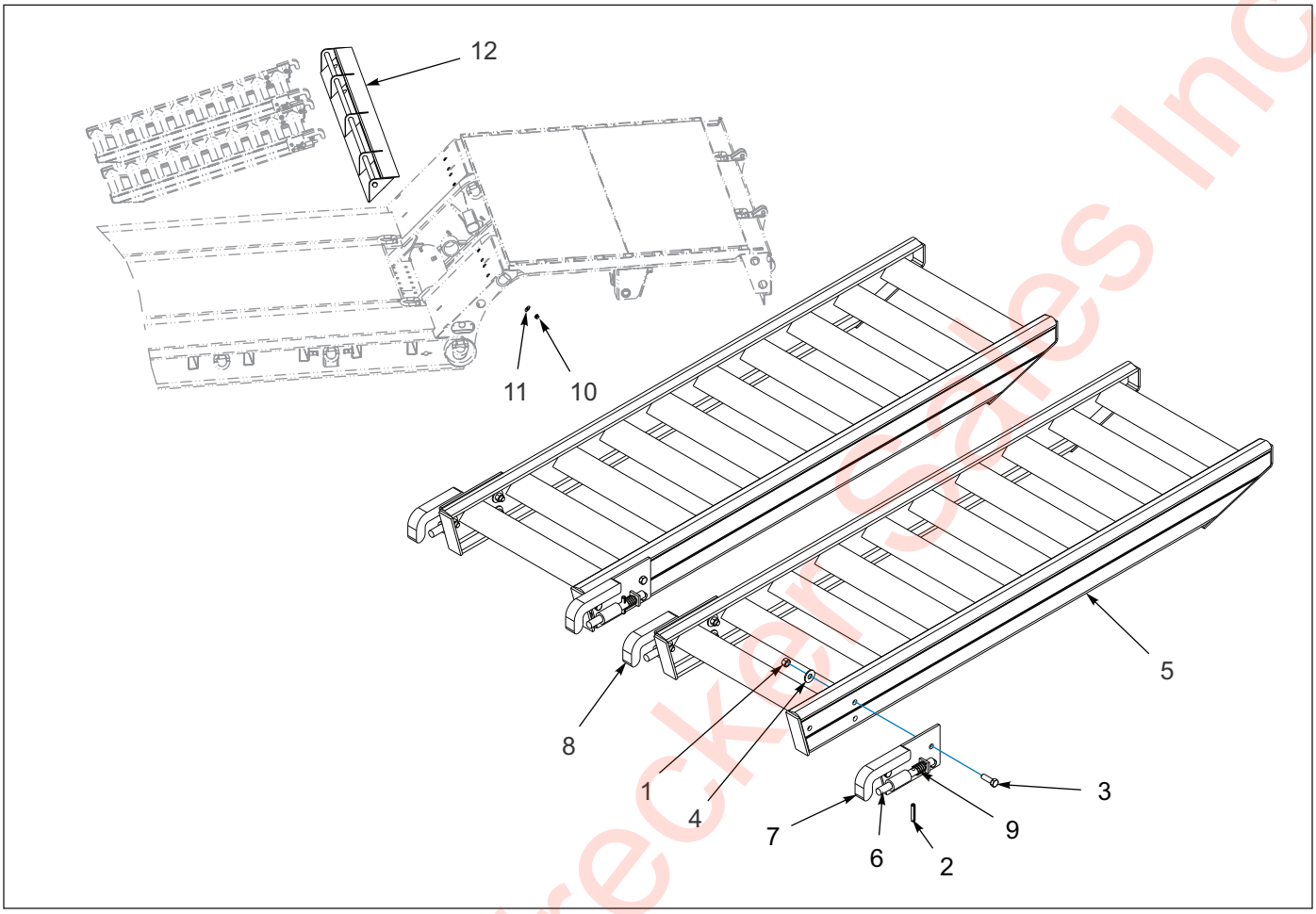

Figure 1-112: Ramp Assembly - Aluminum Beavertail

Ramp Assembly - Aluminum Beavertail

ITEM	PART NO.	DESCRIPTION	QTY.
	110527	RAMP ASSEMBLY 5.5 FT ALUM	
	148786	BRACKET, TRUNNION SLOPE BEAVERTAIL RAMP	
	164814	BRACKET, TRUNNION SLOPE 835-10 RP	
1	1-512-010007-09	NUT, HEX 1/2-13	12
2	1-647-010004255	PIN, SPRING, SLOTTED 2 X 3/8	4
3	1-654-010055-03	SCREW, HEX HEAD CAP 1/2-13 X 1-1/2 GR5	12
4	1-861-010032-15	WASHER, FLAT 1/2W	12
5	110526	RAMP WELDMENT, 5.5 ALUMINUM	2
6	3-557-010116	LOCK PIN RAMPS	4
7	3-619-010065	LT HOOK WELDMENT	2
8	3-619-010066	RT HOOK WELDMENT	2
9	CO-975-74-2000	SPRING COMPRESSION	4
10	1-512-010005-15	NUT, HEX LOCK 3/4-10 GRB	4
11	1-861-010032-21	WASHER, FLAT 3/4W	4
12	148787	BRACKET WELDMENT, HOOK RAMP 102” WIDE **(USED W/ 148786)**	1
12	164807	BRACKET WELDMENT, HOOK RAMP 120” WIDE **(USED W/ 164814)**	1

Eastern Wrecker Sales Inc

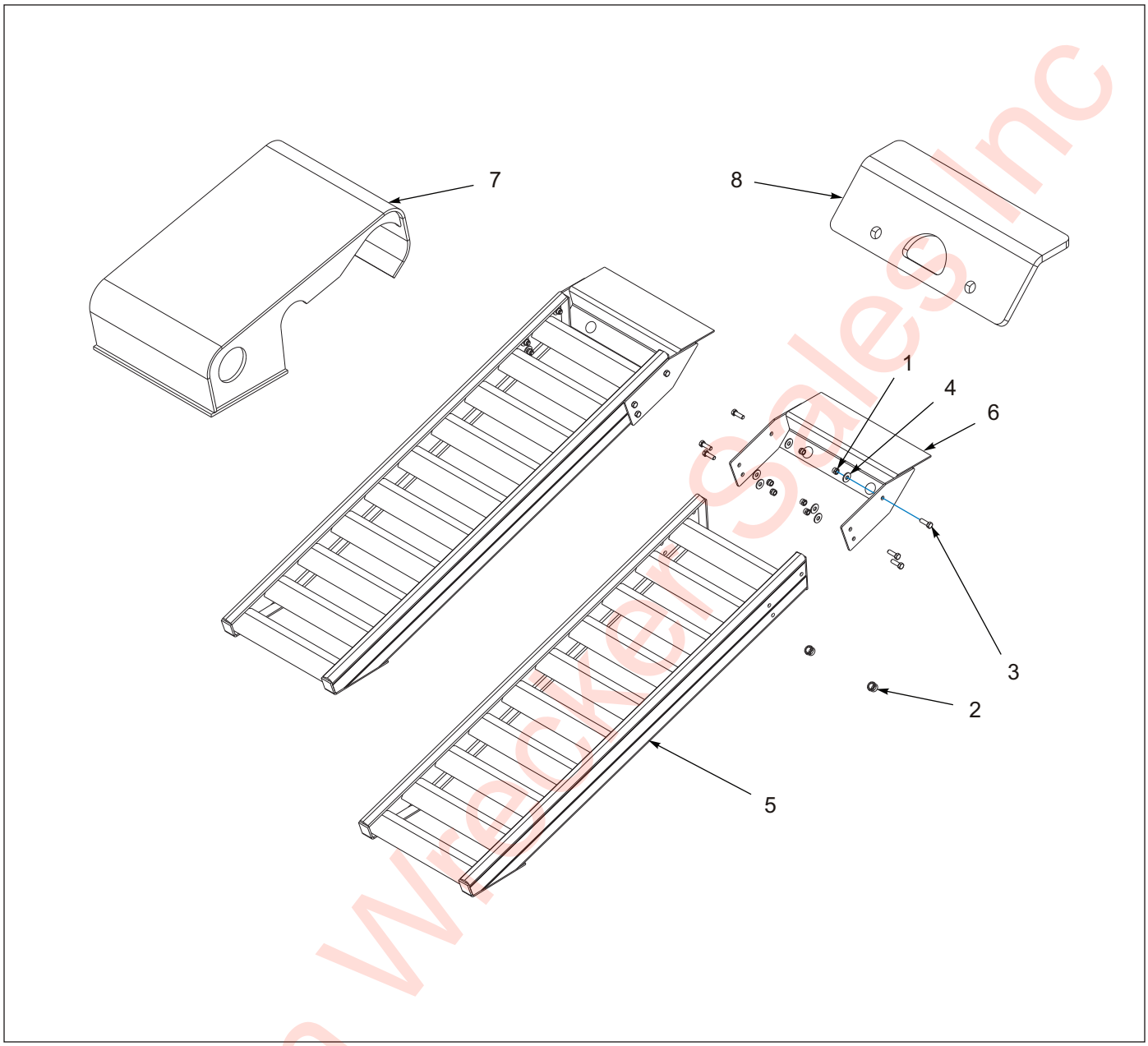

Figure 1-113: Ramp Assembly - Aluminum Trunnion

Ramp Assembly - Aluminum Trunnion

ITEM	PART NO.	DESCRIPTION	QTY.
	125836	RAMP ASSEMBLY 70", TRUNNION	
1	1-512-010005-09	NUT, HEX LOCK 1/2-13 GRB	12
2	1-512-010005-15	NUT, HEX LOCK 3/4-10 GRB	4
3	1-654-010055-03	SCREW, HEX HEAD CAP 1/2-13 X 1-1/2 GR5	12
4	1-861-010032-15	WASHER, FLAT 1/2W	12
5	110526	RAMP WELDMENT, 5.5 ALUM	2
6	125833	ANCHOR WELDMENT, RAMP SLOPE	2
7	129879	RAMP WELDMENT, TRACK ASSIST	2
8	135777	RAMP MOUNT, ADAPTER WELDMENT	2

Eastern Wrecker Sales Inc

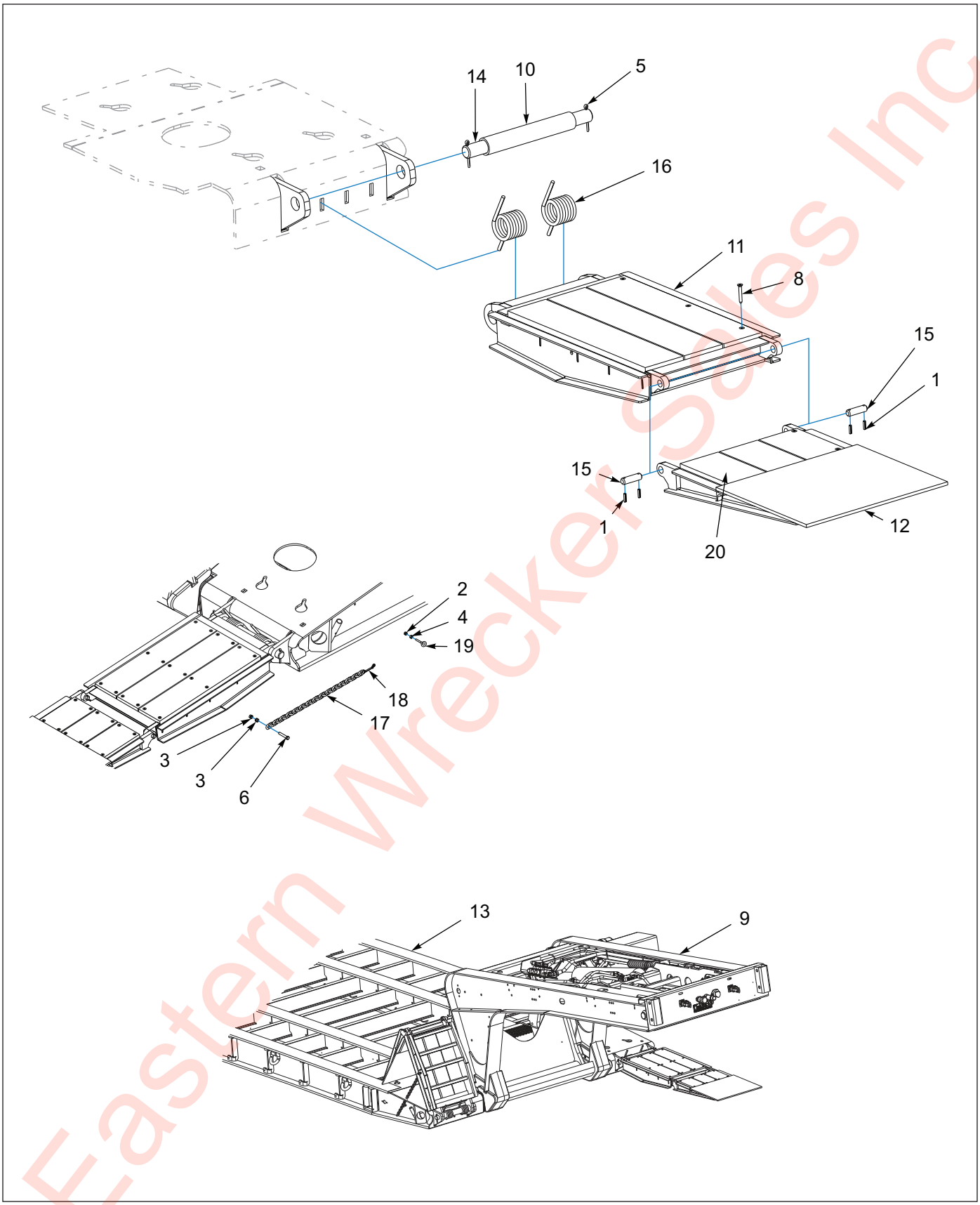

Figure 1-114: Ramp Assembly - Front Bi-Fold (835 Paver)

Eastern Wrecker Sales Inc

Ramp Assembly - Front Bi-Fold (835 Paver)

ITEM	PART NO.	DESCRIPTION	QTY.
	180837	RAMP INSTL FRT BI-FOLD 835 PAV	
1	0600-250-01000	1/4X1 ROLL PIN ZP	8
2	1-512-010005-03	NUT HEX SLFLKG GRB 5/16-18	2
3	1-512-010005-05	NUT, HEX, SLFLKG GRB 3/8-16	4
4	1-512-010007-06	NUT, HEX 5/16-18	2
5	1-557-010362-65	PIN COTTER, 1/4X2-1/2 ZP	4
6	1-654-010051-09	SCREW,HEX CAP,3/8-16UNCX2 GR5	2
7	145499	PRESERVATIVE WOODGUARD **(NOT SHOWN)**	0.5
8	158732	SCREW,5/16X2-1/4ZP TORX FLOOR	60
9	-----	GOOSNECK ASSY 835	REF
10	174607	TUBE RD 2X1-9/16X12-1/4 BLACK	2
11	180845	RAMP MIDDLE WLDMT WD FILLED	2
12	180846	RAMP WLDMT END WD FILLED	2
13	181220	FRAME WLMDT 835PAV-53	REF
14	182121	PIN RAMP MOUNT 835PAV	2
15	182123	PIN, 3/4" DIA W/HOLES 2" CTRS	4
16	182170	TORSION SPRING MOC, PAVER RAMP	4
17	187440	CHAIN, 3/16" LINK, 24" LONG	2
18	3-707-010001	SNAP, DOUBLE END	2
19	5/16-18X1-1/2EB	EYE BOLT 5/16-18X1-1/2	2
20	RWD39021	APITONG, 1 X 7.08 NET	28FT

Eastern Wrecker Sales Inc

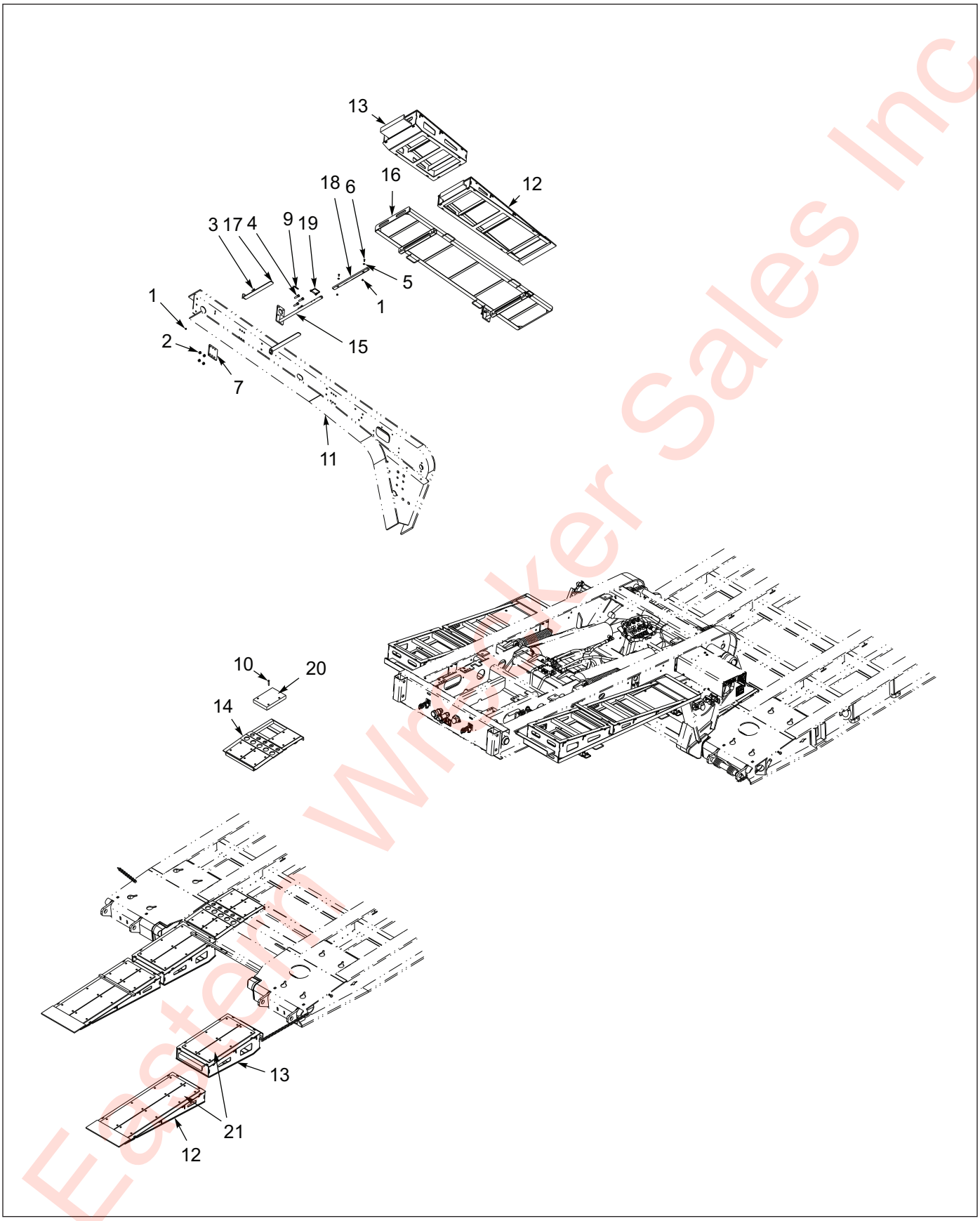

Figure 1-115: Ramp Assembly - Front Center (835 Paver)

Eastern Wrecker Sales Inc

Ramp Assembly - Front Center (835 Paver)

ITEM	PART NO.	DESCRIPTION	QTY.		
	182125	RAMP 2 SETS FRT CNTR 835PAV	*		
	183605	RAMP 1 SET FRT CTR 835PAV		*	
	194843	RAMP 2 SETS FRT CTR 835PAV NO STORAGE			*
1	1-512-010005-01	NUT,HEX,SLFLKG GRB 1/4-20	16	8	--
2	1-512-010005-09	NUT,HEX,SLFLKG, 1/2-13 GRB	16	8	--
3	1-654-010047-06	SCREW,HX CP 1/4-20UNCX1 GR5	8	4	--
4	1-654-010055-04	SCREW, HX CAP, 1/2-13UNCX1.75 GR5	16	8	--
5	1-861-010032-06	WASHER, FLAT 1/4 N ZP/CD	8	4	--
6	106955	SCREW,BHSC 1/4-20UNCX3/4	8	4	--
7	111382	MOUNT, TIE DOWN BLACK	4	2	--
8	145499	PRESERVATIVE WOODGUARD **(NOT SHOWN)**	.5	.25	.5
9	147072	PIN, SPRING SLOTTED 5/16 X 2	4	2	--
10	158732	SCREW,5/16X2-1/4ZP TORX FLOOR	88	44	88
11	180837	RAMP INSTL FRT BI-FOLD 835PAV	REF	REF	REF
12	182128	RAMP WLDMT,AL W/ WD,FRT 835PAV	2	1	2
13	182137	RAMP,WLDMT,AL,REAR, 835 PAV	2	1	2
14	182146	WLDMT,RAMP FILLER, 835 PAV	2	1	2
15	182153	RAMP STORAGE WLDMT,835PAV	4	2	--
16	182156	SLIDE TRAY WLDMT, RAMP STORAGE	2	1	--
17	182159	PLATE, LOCK, RAMP STORAGE	4	2	--
18	182167	SLIDE PAD 5/8X1-1/4X18-1/4 NYL	4	2	--
19	516-22PTL	RETAINING PIN MUD FLAP	4	2	--
20	RWD39000	APITONG, 1-3/8 X 7.08 NET	3	1.5	3
21	RWD39021	APITONG, 1 X 7.08 NET	20	10	20

Eastern Wrecker Sales Inc

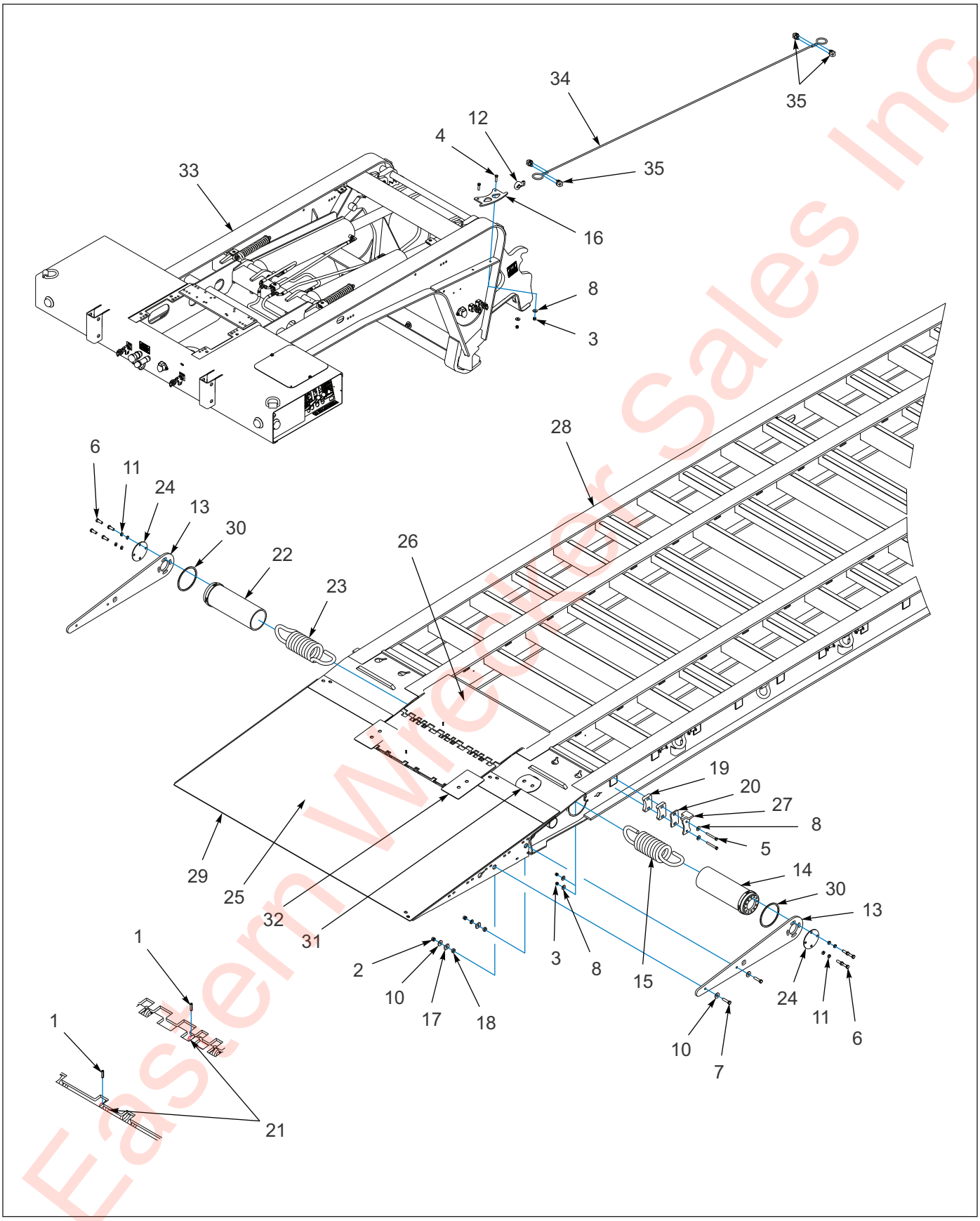

Figure 1-116: Ramp Installation - Full Width Front (835)

Eastern Wrecker Sales Inc

Ramp Installation - Full Width Front (835)

ITEM	PART NO.	DESCRIPTION	QTY.
	140381	FRONT FOLD RAMP INSTALLATION	
1	0600-250-01000	ROLL PIN, SLOTTED 1/4 X 1	12
2	1-512-010002-14	NUT, HEX LOCK 5/8-18 GRC	4
3	1-512-010005-09	NUT, HEX LOCK 1/2-13 GRB	6
4	1-654-010055-04	SCREW, HEX HEAD CAP 1/2-13 X 1-3/4 GR5	2
5	1-654-010055-13	SCREW, HEX HEAD CAP 1/2-13 X 4 GR5	4
6	1-654-010059-04	SCREW, HEX HEAD CAP 5/8-11 X 1-3/4 GR5	8
7	1-654-010059-07	SCREW, HEX HEAD CAP 5/8-11 X 2-1/2 GR5	4
8	1-861-010032-15	WASHER, FLAT 1/2W	10
9	1-861-010032-18	WASHER, FLAT 5/8N	2
10	1-861-010032-19	WASHER, FLAT 5/8W	6
11	1-861-010034-15	WASHER, SPLIT LOCK 5/8	8
12	113479	HOOK, 3/8 CLEVIS SLIP	1
13	139413	PIVOT ARM, RAMP	2
14	139414	PIVOT ARM WELDMENT, RAMP	1
15	139619	SPRING, TORSION, RAMP LH	1
16	139628	ANCHOR CABLE, G/N	1
17	139630	BUSHING, RAMP ARM	4
18	139631	WASHER, RAMP ARM	4
19	139822	SPACER STOP, PIVOT RAMP	4
20	139823	STOP, PIVOT RAMP	2
21	139826	PIN, RAMP FLIPPER	6
22	139829	PIVOT ARM WELDMENT, RAMP	1
23	139830	SPRING, TORSION RAMP RH	1
24	139833	COVER, PIVOT ARM RAMP	2
25	140275	RAMP, CENTER FLIP WELDMENT	1
26	140278	RAMP, REAR FLIP WELDMENT	1
27	140281	STOP WELDMENT, ARM RAMP	2
28	140380	FRAME MOD W/ FULL RAMP	REF
29	140382	RAMP WELDMENT, FRONT FULL WIDTH	1
30	140391	SHIM, 3/16 X 8 OD X 7-1/4 ID	2
31	140927	FILLER WELDMENT APPROACH	1
32	140929	FILLER WELDMENT RAMP FLIPPER	2
33	146909	GOOSENECK WELDMENT	REF
34	3/8CABLE	CABLE, 3/8 WIRE ROPE	12 FT
35	3/8 WR CLAMP	CLIP, 3/8 WIRE ROPE CLAMP	4

Eastern Wholesaler Sales Inc

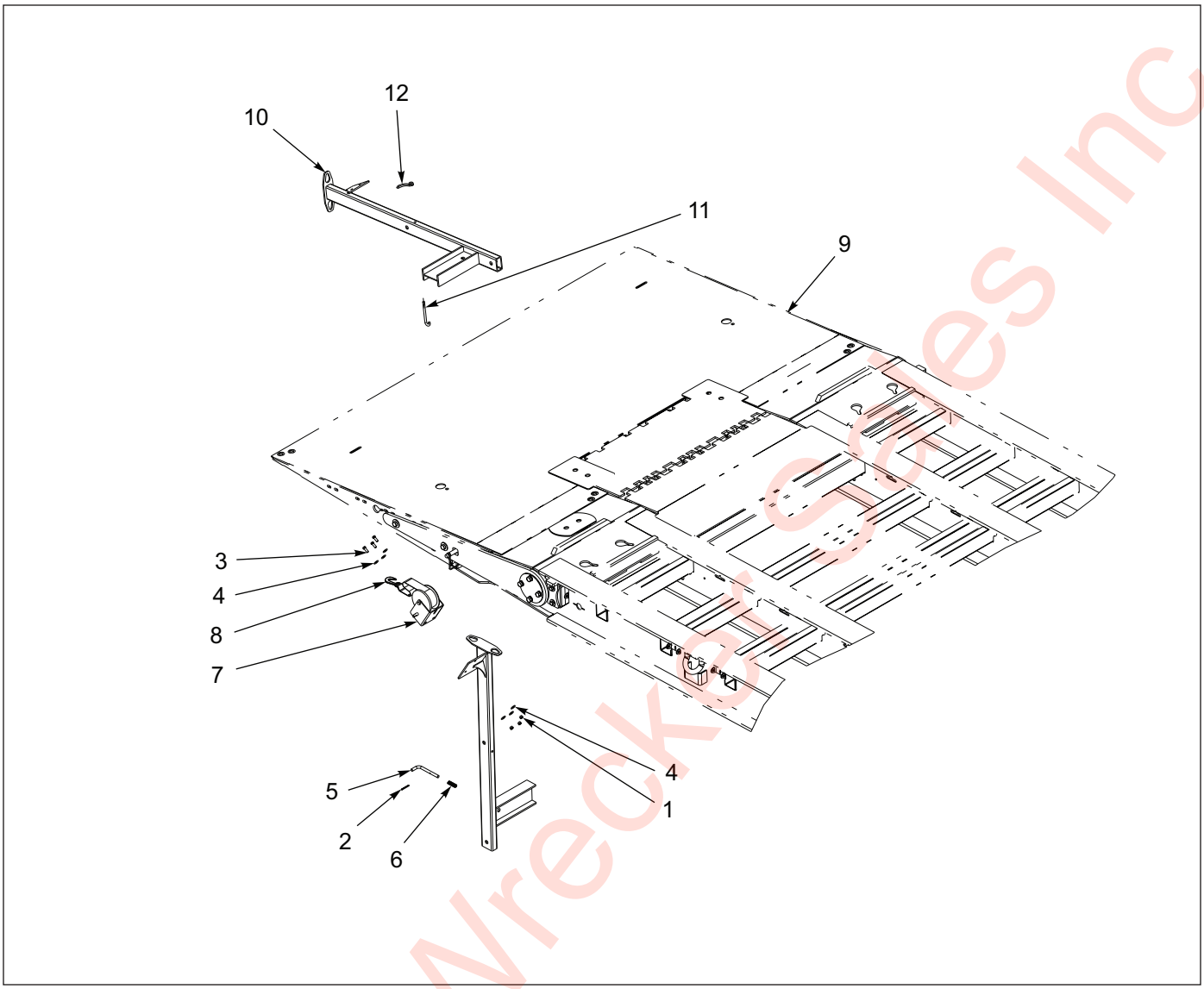

Figure 1-117: Ramp Installation - Lift Assist (835E)

Ramp Installation - Lift Assist (835E)

ITEM	PART NO.	DESCRIPTION	QTY.
	140393	RAMP LIFT ASST ASSY 835	
1	1-512-010005-05	NUT, HEX, SLFLKG GRB 3/8-16	3
2	1-647-010004181	SPRING PIN SLOTTED TYPE3/16X2	1
3	1-654-010051-05	SCREW,HEX CAP 3/8-16UNCX1 GR5	3
4	1-861-010032-11	WASHER, FLAT 3/8 W ZP/CD	6
5	104252	PIN P/O EXT LOCK	1
6	104253	SPRING,COMPRESSION P/OEXTLOCK	1
7	130054	WINCH,HAND	1
8	130055	STRAP,2"X25FT W/HOOK	1
9	140381	RAMP INSTL 835 FRONT FOLD	REF
10	199000	STAND WLDMT RAMP LIFT WINCH	1
11	201974	J-BOLT 3/8-16X5	1
12	201975	HANDLE NUT 3/8-16X4-1/4	1

Eastern Wrecker Sales Inc

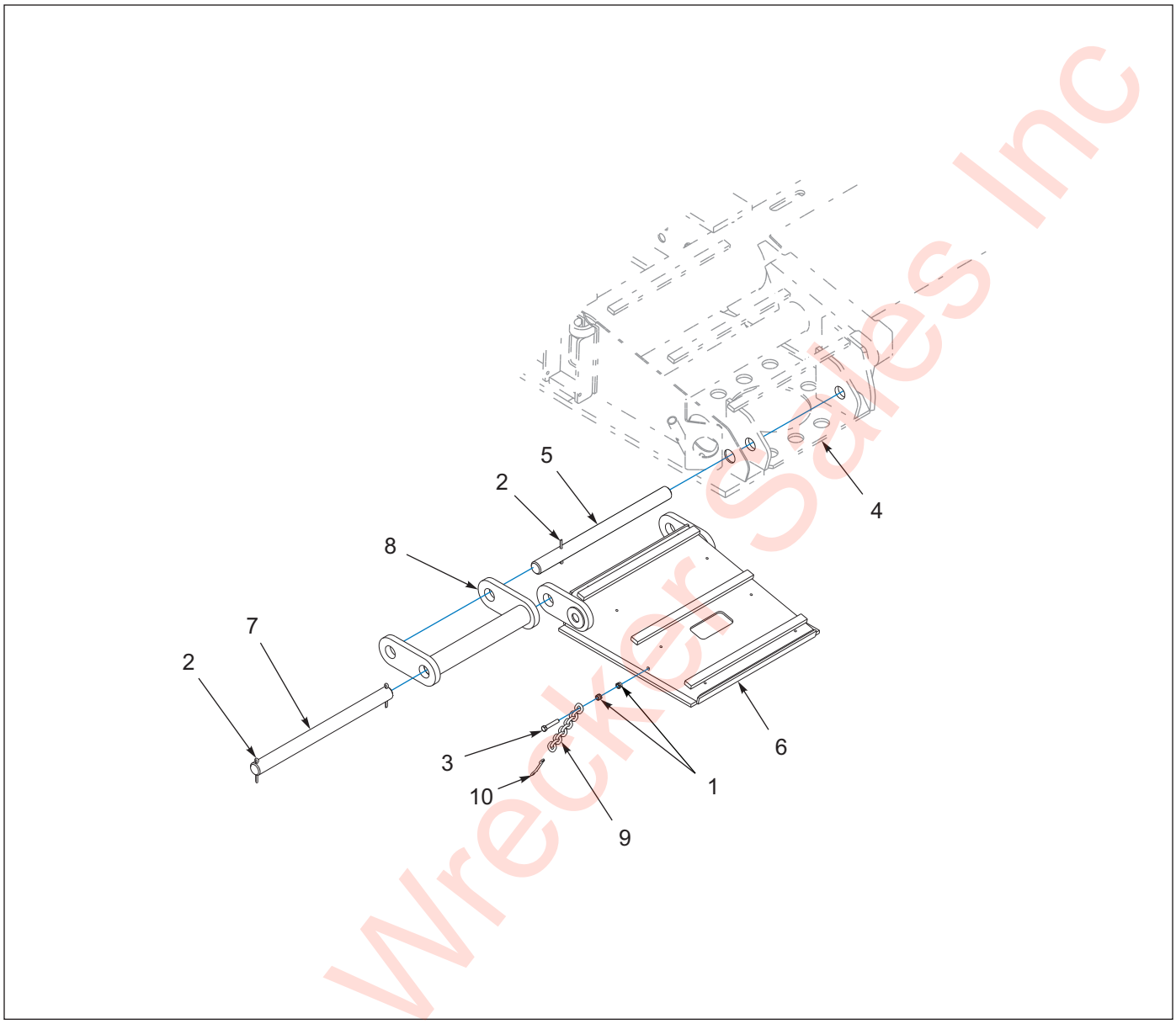

Figure 1-118: Ramp Installation 24’ - (835 Construction)

Ramp Installation 24’ - (835 Construction)

ITEM	PART NO.	DESCRIPTION	QTY.
	168039	RAMP INSTALLATION 24’ 835-CONSTRUCTION	
1	1-512-010005-05	NUT, HEX LOCK 3/8-16 GRB	4
2	1-557-010362-65	PIN, COTTER 1/4 X 2-1/2	6
3	1-654-010051-09	SCREW, HEX HEAD CAP 3/8-16 X 2 GR5	4
4	-----	FRAME WELDMENT	REF
5	168024	MOUNT ROD, RAMP	2
6	168025	RAMP WELDMENT, APPROACH	2
7	168041	PIN, MOUNT RAMP	2
8	172063	LINK, RAMP ASSEMBLY	2
9	2-174-010029	CHAIN, LIMIT	2
10	3-707-010001	SNAP, DOUBLE END	2

Eastern Wrecker Sales Inc

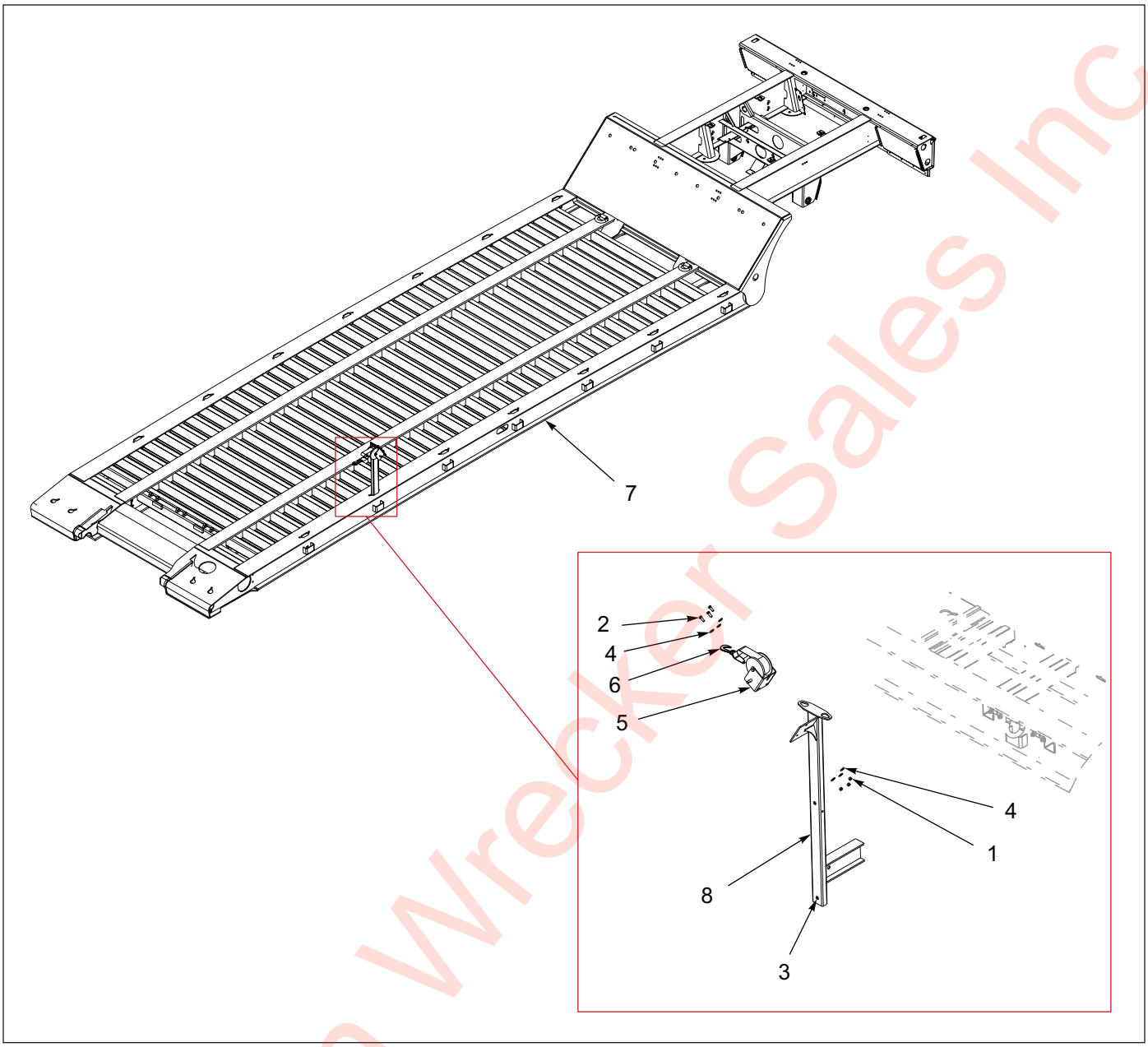

Figure 1-119: Ramp Lift Assembly (825E)

Ramp Lift Assembly (825E)

ITEM	PART NO.	DESCRIPTION	QTY.
	140243	RAMP LIFT ASSEMBLY 825	
1	1-512-010005-05	NUT, HEX LOCK 3/8-16 GRB	3
2	1-654-010051-05	SCREW, HEX HEAD CAP 3/8-16 X 1 GR5	3
3	1-654-010055-02	SCREW, HEX HEAD CAP 1/2-13 X 1-1/4 GR5	1
4	1-861-010032-11	WASHER, FLAT 3/8W	6
5	130054	WINCH, HAND	1
6	130055	STRAP, 2" X 25' W/ HOOK	1
7	-----	FRAME WELDMENT	REF
8	140242	LIFT RAMP WELDMENT	1

Eastern Wrecker Sales Inc

Misc Options

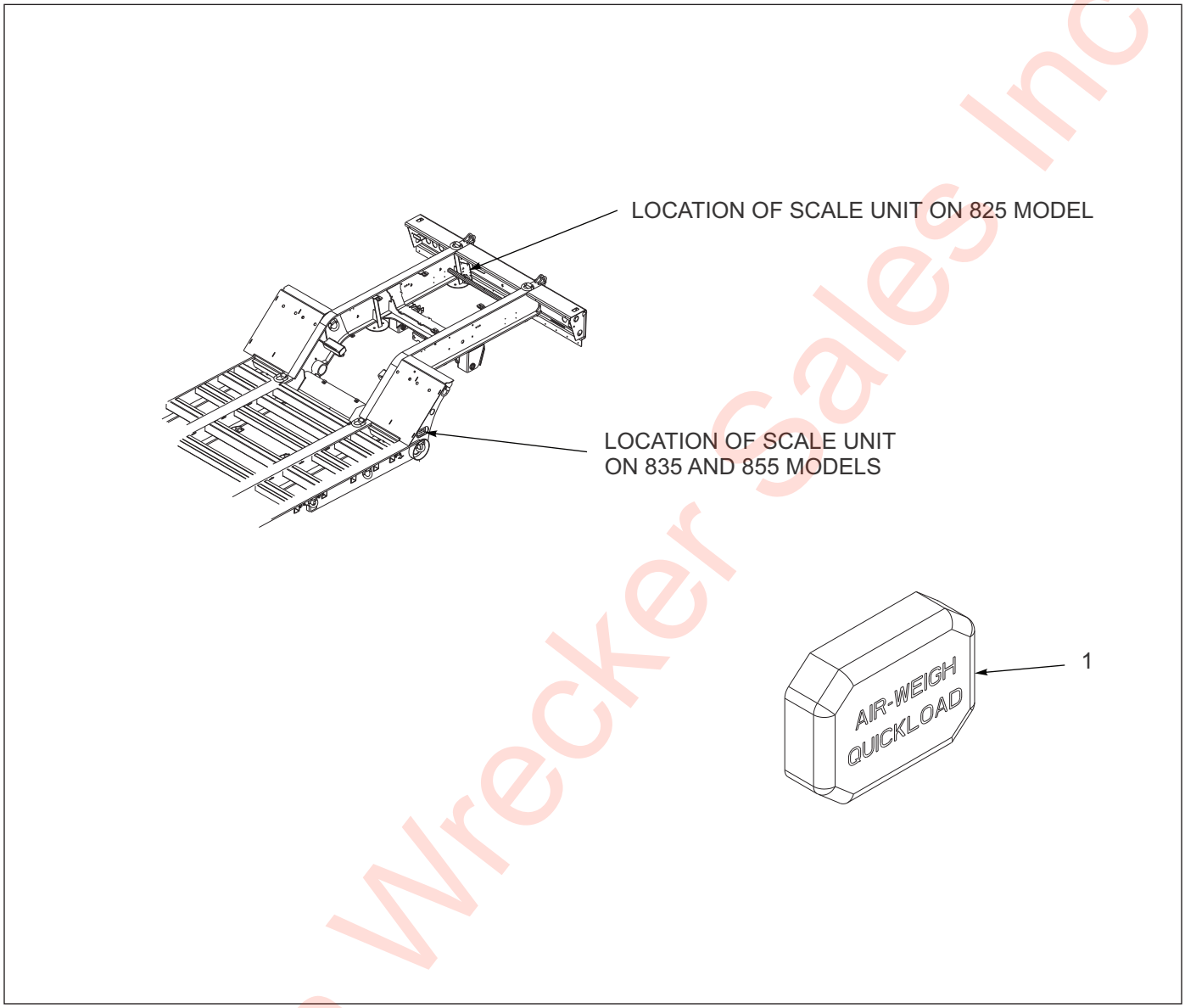

Figure 1-120: Air Weigh Scale Installation

Air Weigh Scale Installation

ITEM	PART NO.	DESCRIPTION	QTY.
	175366	SCALE INSTALLATION, QUICKLOAD RIGID	
1	175357	SCALE KIT, AIR QUICKLOAD	1
2	175361	CABLE, TRAILER POWER ABS T-BREAKOUT 15’	1
3	175362	TRAILER SCALE, QUICKLOAD	1
4	166924	DECAL, AW5800 TRAILER SIDE - M	1
5	175363	SPRING HOSE CLAMP 1/4OD	2
6	175365	AIR LIN 1/4OD	10’
7	3-395-010001	HOSE, CF FIRE **(NOT SHOWN)**	AR
8	204675	COMLINK CABLE - COMMUNICATES WITH TRUCK **(OPTIONAL)**	AR

Eastern Wrecker Sales Inc

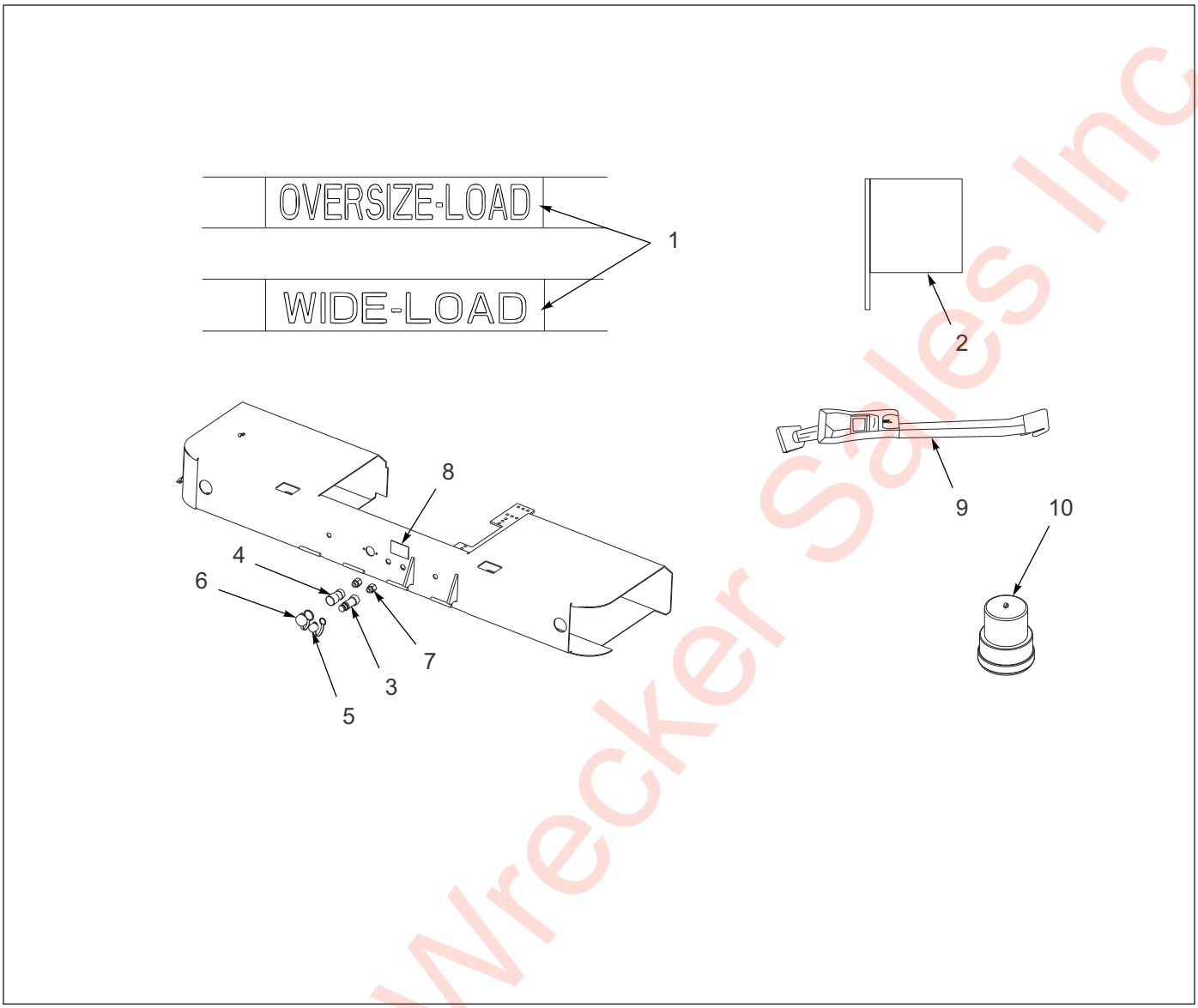

Figure 1-121: Banner Flag Kit Assembly

Banner Flag Kit Assembly

ITEM	PART NO.	DESCRIPTION	QTY.
	105297	BANNER/FLAG KIT WIDE/OVS LS **(ITEMS 1 & 2)**	
1	106655	BANNER WIDE/OVERSIZE LOAD	1
2	106654	FLAG, OVERWIDTH	6
3	105479	COUPLER, FLAT FACE MALE NOSE	1
4	105480	COUPLER, FLAT FACE FEMALE NOSE	1
5	105481	COUPLER, DUST CAP MALE	1
6	105482	COUPLER, DUST CAP FEMALE	1
7	2216-12-12S	INTERNAL PIPE, O-RING BOSS	2
8	105822	DECAL, HYD COUPLER	1
9	100696	STRAP, RATCHET ASSEMBLY **(NO PARTS BREAKDOWN)**	2
10	160070	WARNING LIGHT, AMBER MAG BASE	2

Eastern Wrecker Sales Inc

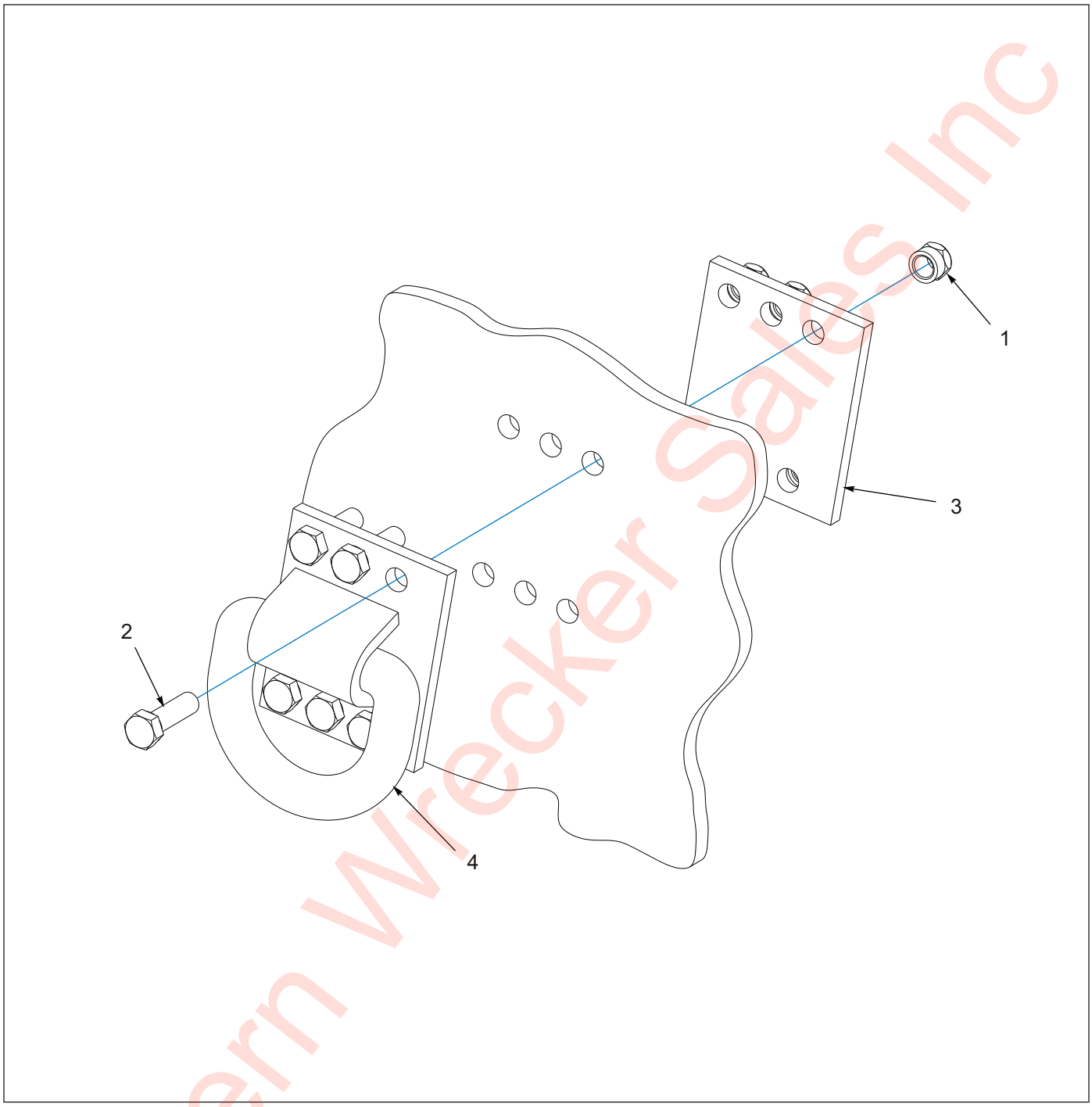

Figure 1-122: Bolt-On D-Ring Assembly

Bolt-on D-ring Assembly

ITEM	PART NO.	DESCRIPTION	QTY.
	111390	D-RING ASSEMBLY, BOLT-ON	
1	1-512-010005-09	NUT, HEX LOCK 1/2-13 GRB	6
2	1-654-010055-04	SCREW, HEX HEAD CAP 1/2-13 X1-3/4 GR5	6
3	111382	MOUNT, TIE DOWN	1
4	3-793-010040	TIE DOWN, WINCH	1

Eastern Wrecker Sales Inc

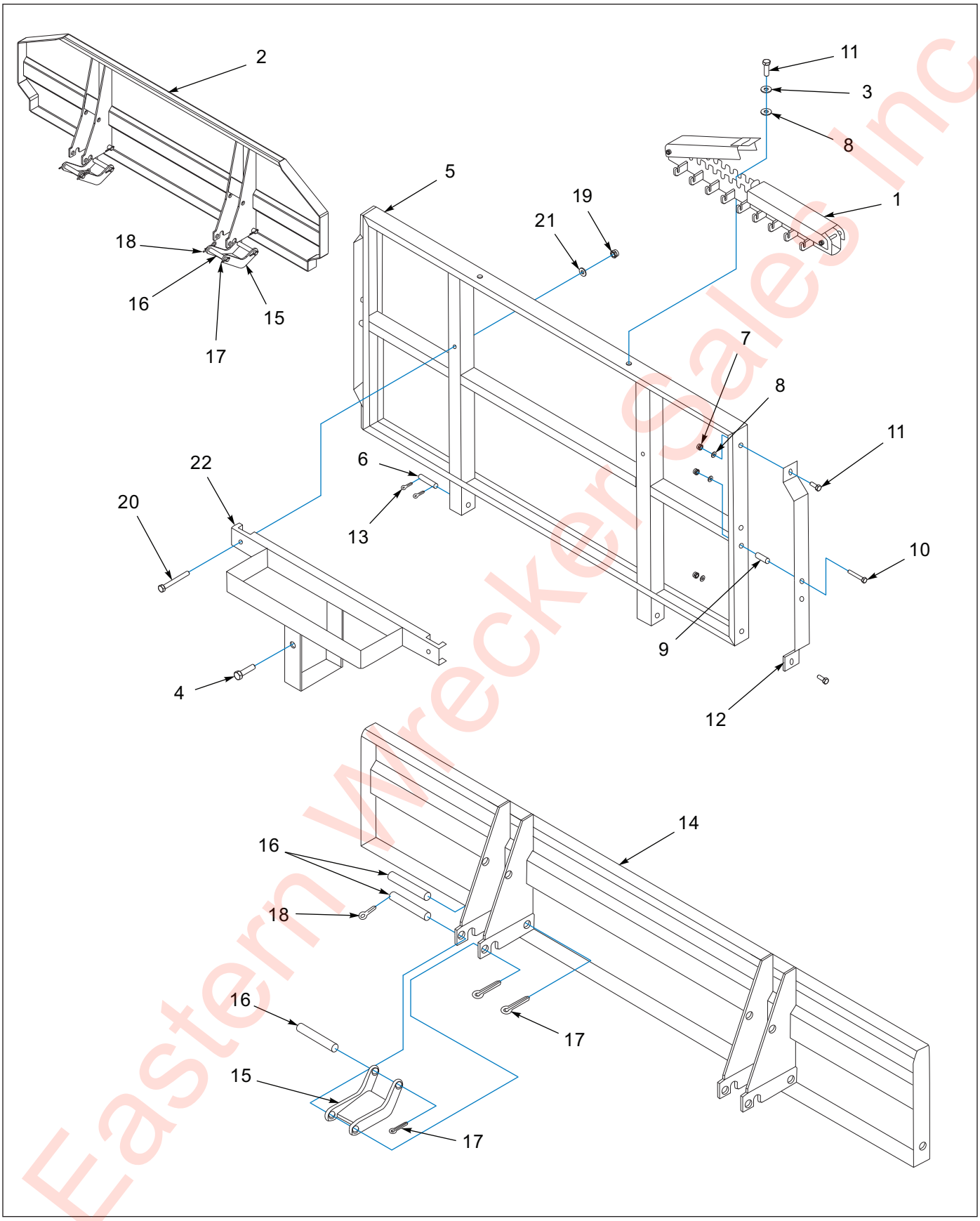

Figure 1-123: Bulkhead and Chain Rack Installation

Eastern Wrecker Sales Inc

Bulkhead and Chain Rack Installation

ITEM	PART NO.	DESCRIPTION	QTY.
	B7-141-003	BULKHEAD CHAIN RACK INSTALLATION **(ITEMS 1, 3, 8, & 11)**	
	3-141-010121	BULKHEAD INSTALLATION **(ITEMS 5-13, REF ONLY)**	
	3-141-010123	BULKHEAD INSTALLATION 2 POSITION **(ITEMS 14-19, REF ONLY)**	
	112986	RACK INSTALLATION BHD FRT MOUNT **(ITEMS 20-24)**	
	135267	EXTENSION INSTALLATION, MOD. **(ITEMS 2, & 16-19)**	
1	3-141-010008	CHAIN HANGER LOCKING CHANNEL WLDMT	1
2	135268	EXTENSION WELDMENT, MOD 16/24	1
3	1-861-010034-13	WASHER, SPLIT LOCK 1/2	1
4	1-654-010055-01	SCREW, HEX HEAD CAP 1/2-13 X 1 GR5	1
5	3-141-010155	BULKHEAD WELDMENT 48 X 96	1
	3-141-010152	BULKHEAD WELDMENT 16 X 102	1
6	6-557-010163	PIN, HITCH LEVEL LINK	2
7	1-512-010005-09	NUT, HEX LOCK 1/2-13 GRB	6
8	1-861-010032-15	WASHER, FLAT 1/2W	6
9	3-711-010025	SPACER, BULKHEAD 48"	2
10	1-654-010055-13	SCREW, HEX HEAD CAP 1/2-13 X 4 GR5	2
11	1-654-010055-03	SCREW, HEX HEAD CAP 1/2-13 X 1-1/2 GR5	4
12	3-054-010101	BAR SIDE, BULKHEAD 48"	2
13	1-557-010362-63	COTTER PIN 1/4 X 2	4
14	3-141-010147	BULKHEAD WELDMENT 16/24 X 102 2 POS	1
16	3-755-010080	SUPPORT WELDMENT, BULKHEAD	2
17	3-557-010380	PIN SUPPORT, BULKHEAD	6
18	1-557-010362-63	COTTER PIN 1/2 X 2	10
19	1-557-010014	HAIRPIN 1/4	2
20	1-512-010005-09	NUT, HEX LOCK 1/2-13 GRB	3
21	1-654-010055-15	SCREW, HEX HEAD CAP 1/2-13 X 5 GR5	2
22	1-861-010032-15	WASHER, FLAT 1/2W	2
23	112987	RACK WELDMENT, BULKHEAD MOUNT	1

Eastern Wrecker Sales Inc

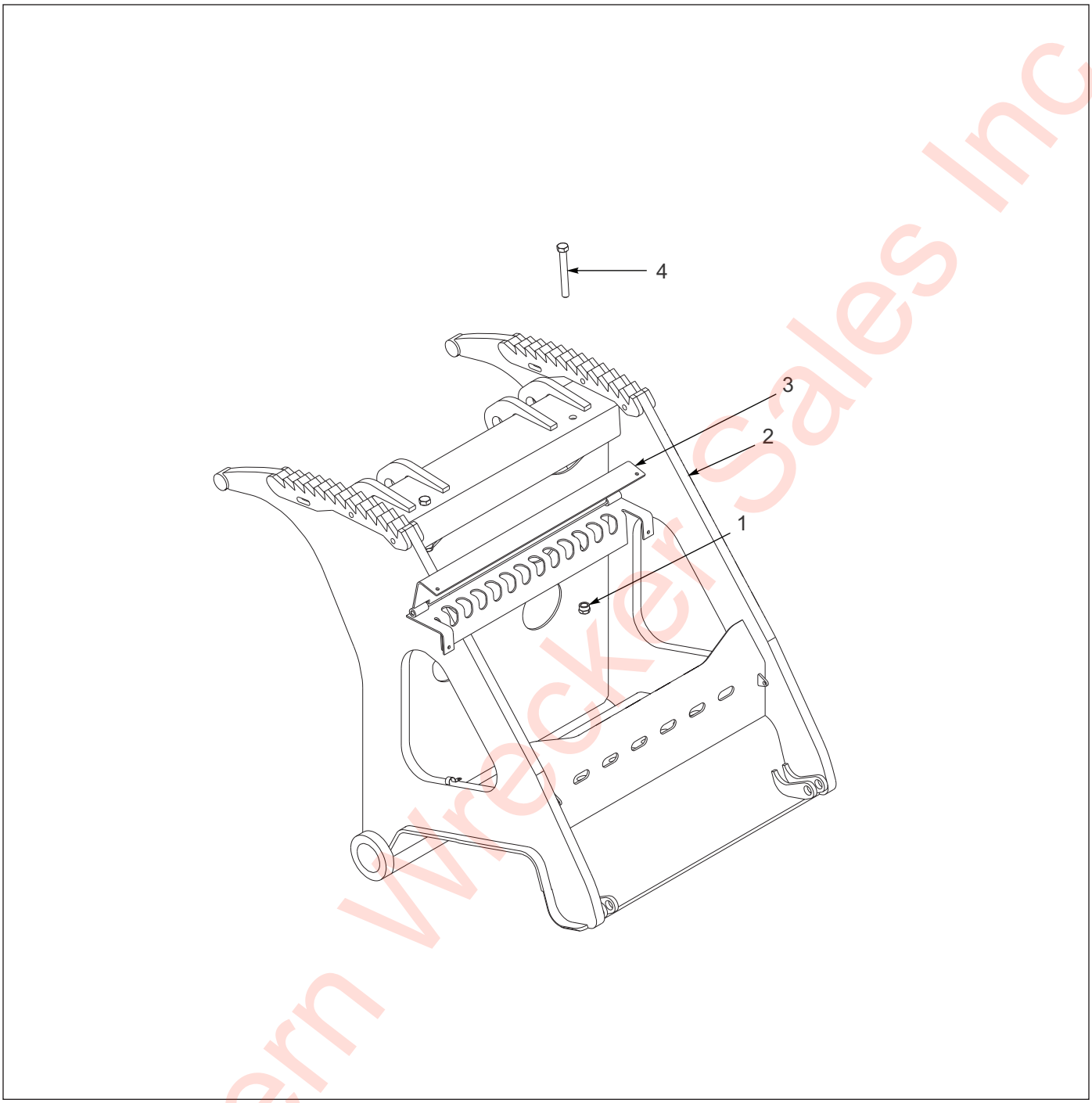

Figure 1-124: Chain Rack Assembly

Chain Rack Assembly

ITEM	PART NO.	DESCRIPTION	QTY.
	162051	CHAIN/BINDER RACK AND TRAY INSTALLATION	
1	1-512-010005-15	NUT, HEX LOCK 3/4-10 GRB	2
2	160396	CARRIER WLDMT	REF
3	162049	RACK WELDMENT, CHAIN/BINDER	1
4	W908409-4	SCREW, HEX HEAD CAP 3/4-10 X 6 GR5	2

Eastern Wrecker Sales Inc

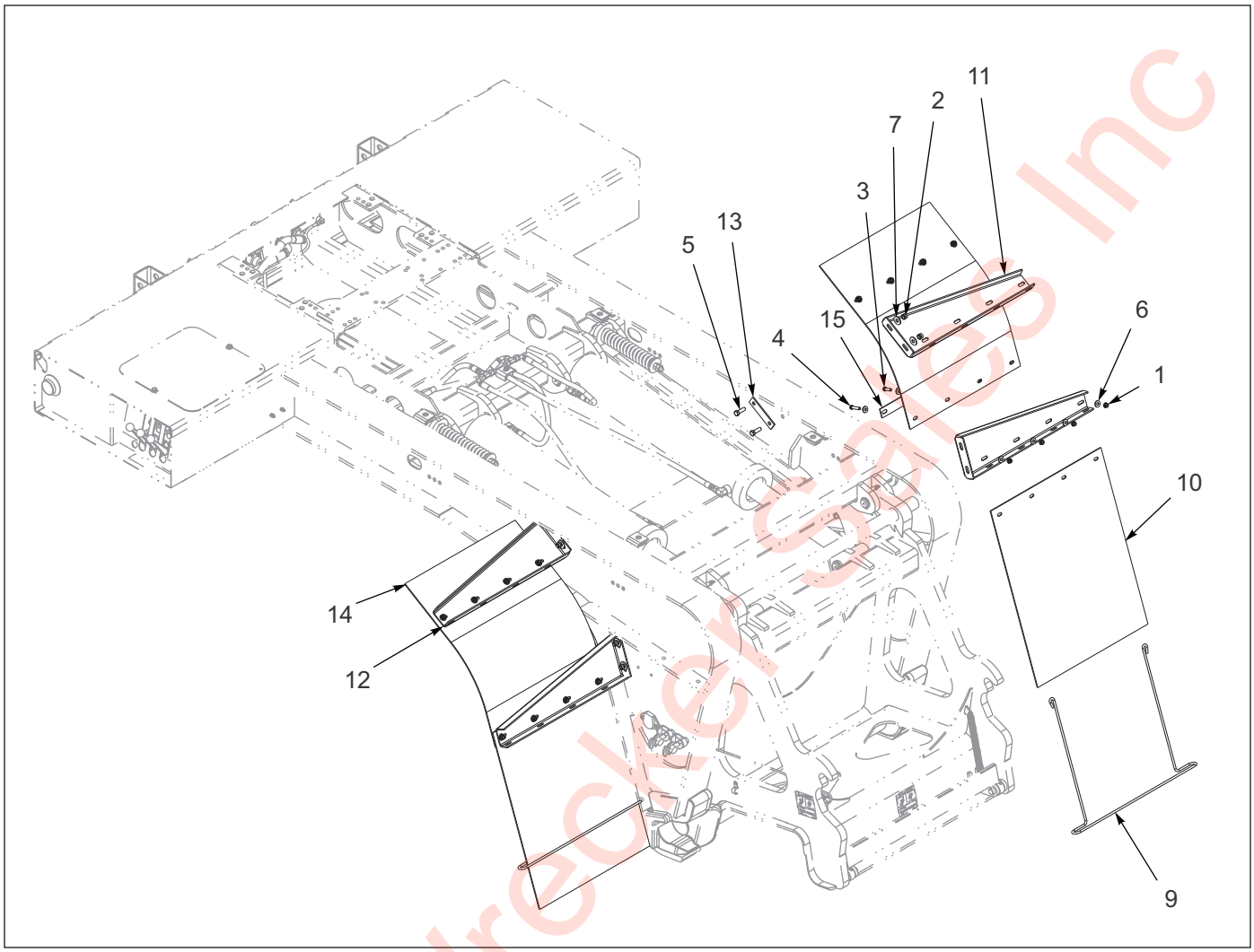

Figure 1-125: Gooseneck Mud Flap Installation

Gooseneck Mud Flap Installation

ITEM	PART NO.	DESCRIPTION	QTY.
	142065	MUD FLAP INSTALLATION, GOOSENECK	
1	1-510-010001	NUT, FLANGE LOCK 3/8-16	16
2	1-512-010005-09	NUT, HEX LOCK 1/2-13 GRB	8
3	1-654-010051-06	SCREW, HEX HEAD CAP 3/8-16 X 1-1/4 GR5	12
4	1-654-010051-08	SCREW, HEX HEAD CAP 3/8-16 X 1-3/4 GR5	4
5	1-654-010055-03	SCREW, HEX HEAD CAP 1/2-13 X 1-1/2 GR5	8
6	1-861-010032-11	WASHER, FLAT 3/8W	32
7	1-861-010032-15	WASHER, FLAT 1/2W	8
8	-----	GOOSENECK ASSEMBLY	REF
9	128886	BRACKET, ANTI-SAIL MUD FLAP	2
10	131195	MUD FLAP, BLACK POLYMER 24 X 30	2
11	136870	MOUNT, FENDER/ MUD FLAP RH	2
12	136871	MOUNT, FENDER/ MUD FLAP LH	2
13	136908	DOUBLER FENDER MOUNTING	4
14	142064	MUD FLAP, POLYMER MOD 24 X 30	2
15	3-762-010017	CLAMP, MUD FLAP	4

Eastern Wrecker Sales Inc

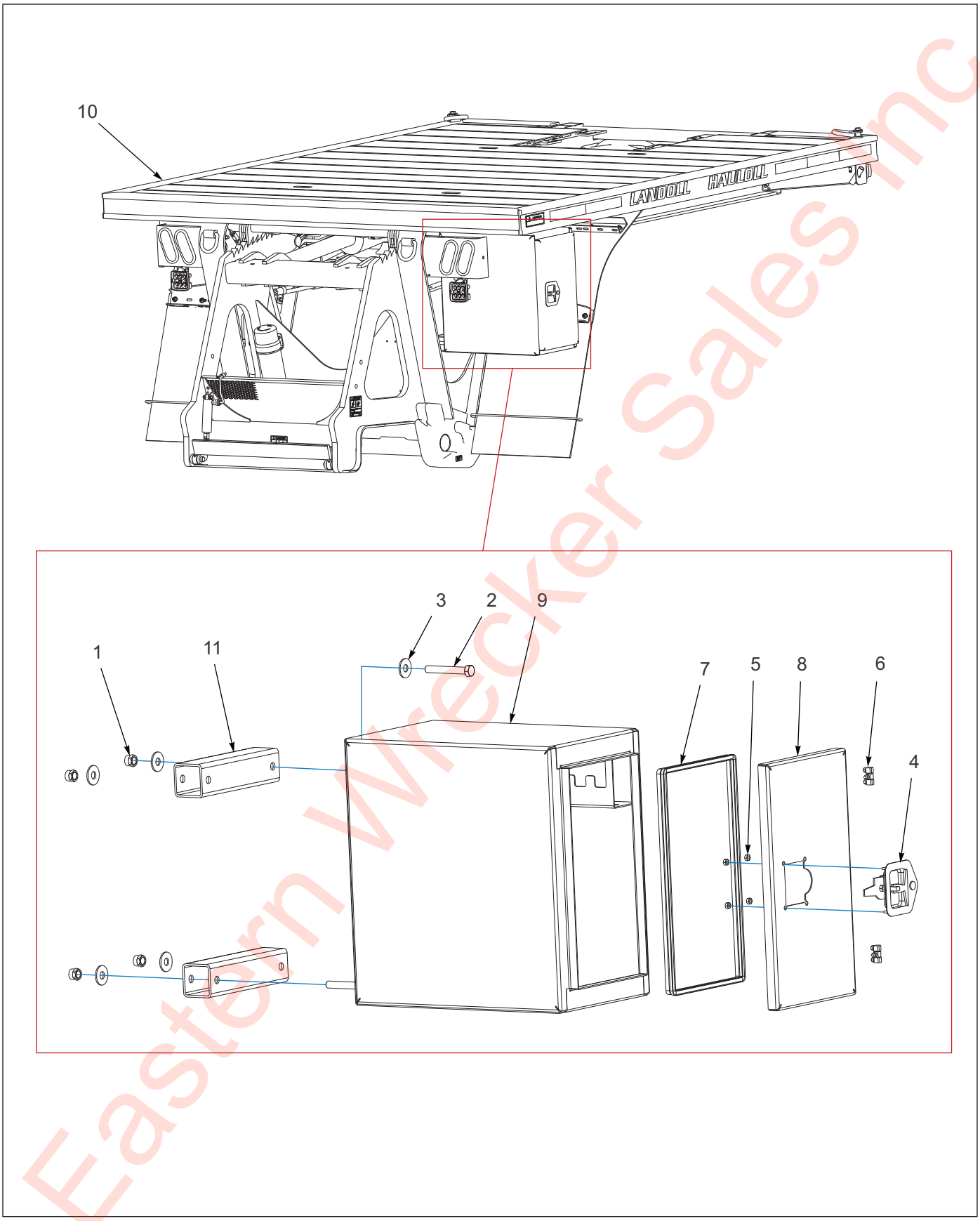

Figure 1-126: Gooseneck Toolbox Installation

Eastern Wrecker Sales Inc

Gooseneck Toolbox Installation

ITEM	PART NO.	DESCRIPTION	QTY.
	171965	TOOLBOX INSTALLATION, G/N	
1	1-512-010005-13	NUT, HEX LOCK 5/8-11 GRB	2
2	1-654-010059-14	SCREW, HEX HEAD CAP 5/8-11 X 4-1/2 GR5	2
3	1-861-010032-19	WASHER, FLAT 5/8W	2
4	114814	LATCH, FOLDING T LOCKABLE	1
5	115877	NUT, HEAVY HEX 1/4-20 GRB	4
6	12412408	HINGE, TOOL BOX DOOR	2
7	12412409	SEAL, FLEXIBLE SELF-GRIPPING	1
8	169404	LID, TOOLBOX **(TO 12-1-2019)**	1
8	225277	LID, TOOLBOX, 24X14, BLACK **(FROM 12-1-2019)**	1
9	171704	TOOLBOX WELDMENT 24 X 22-1/2 X 14 **(TO 12-1-2019)**	1
9	225275	TOOLBOX, 24X22X14, BLACK **(FROM 12-1-2019)**	1
10	171909	BED INSTALLATION, ALUMINUM	REF
11	171967	SPACER, TOOLBOX G/N **(TO 12-1-2019)**	2
11	225281	SPACER, G/N TOOLBOX, BLACK **(FROM 12-1-2019)**	2

Eastern Wrecker Sales Inc

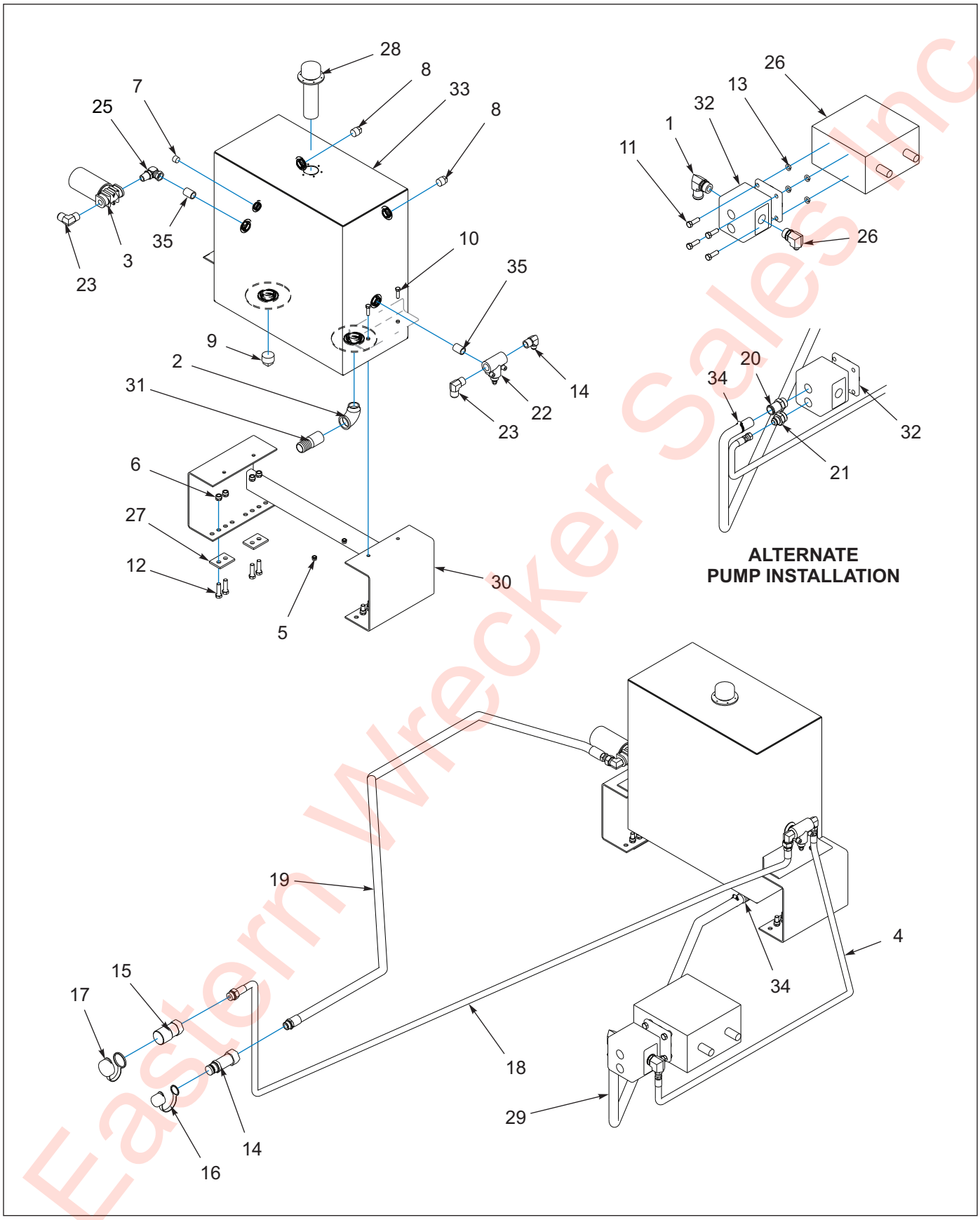

Figure 1-127: Hydraulic Wet Kit

Eastern Wrecker Sales Inc

Hydraulic Wet Kit

ITEM	PART NO.	DESCRIPTION	QTY.
	107498	HYDRAULIC WET KIT W/ PTO INSTALLED	
	107499	HYDRAULIC WET KIT W/ PTO NOT INSTALLED	
	107500	HYDRAULIC WET KIT W/O PTO NOT INSTALLED	
1	1-007-010006	ELBOW 90, 1-5/16 O-RING 1-1/4 HOSE	1
2	1-1/4ST ELL	BLACK PIPE ELBOW 90 ST	1
3	1-295-010001	FILTER, RETURN	1
3	1-295-010002	FILTER ELEMENT	1
4	1-397-010301100	HOSE ASSEMBLY 1/2 X 100	1
5	1-512-010005-05	NUT, HEX LOCK 3/8-16 GRB	4
6	1-512-010005-09	NUT, HEX LOCK 1/2-13 GRB	8
7	1-560-010002-04	PIPE PLUG 1/2	1
8	1-560-010002-05	PIPE PLUG 3/4	2
9	1-560-010002-07	PLUG, BLACK PIPE 1-1/4 SQ HEAD	1
10	1-654-010051-06	SCREW, HEX HEAD CAP 3/8-16 X 1-1/4 GR5	4
11	1-654-010055-03	SCREW, HEX HEAD CAP 1/2-13 X 1-1/2 GR5	4
12	1-654-010055-04	SCREW, HEX HEAD CAP 1/2-13 X 1-3/4 GR5	8
13	1-861-010034-13	WASHER, SPLIT LOCK 1/2	4
14	105479	COUPLER, FLAT FACE MALE NOSE	1
15	105480	COUPLER, FLAT FACE FEMALE BODY	1
16	105481	COUPLER, DUST CAP MALE	1
17	105482	COUPLER, DUST CAP FEMALE	1
18	106759	HOSE ASSEMBLY 1/2 X 164	1
19	106760	HOSE ASSEMBLY 3/4 X 164	1
20	107513	ADAPTER	1
21	12-16 070120	ADAPTER	1
22	125130	RD12D HYD BY PASS SRDD	1
23	2024-12-12S	ADAPTER 90	2
24	2024-12-8S	ADAPTER, 90	1
25	2047-12-12S	ELBOW, 90 SWIVEL	1
26	2062-16-8S	ADAPTER, 90	1
27	3-120-010461	BRACKET, HYD TANK MOUNT SUPPORT	4
28	3-162-010001	FILLER-BREATHER-STRAINER ASSEMBLY	1
29	3-399-010001	HOSE, 1-1/4 SUCTION	8’
30	3-482-010503	TANK MOUNT	1
31	3-561-010001	HOSE BARB 1-1/4	1
32	3-591-010001	HYDRAULIC GEAR PUMP	1
33	3-786-010043	TANK, HYDRAULIC	1
34	6828	IDEAL HOSE CLAMP	2
35	C3069X12	NIPPLE, HEX	2
36	PTO	POWER TAKE OFF	REF

Eastern Wrecker Sales Inc

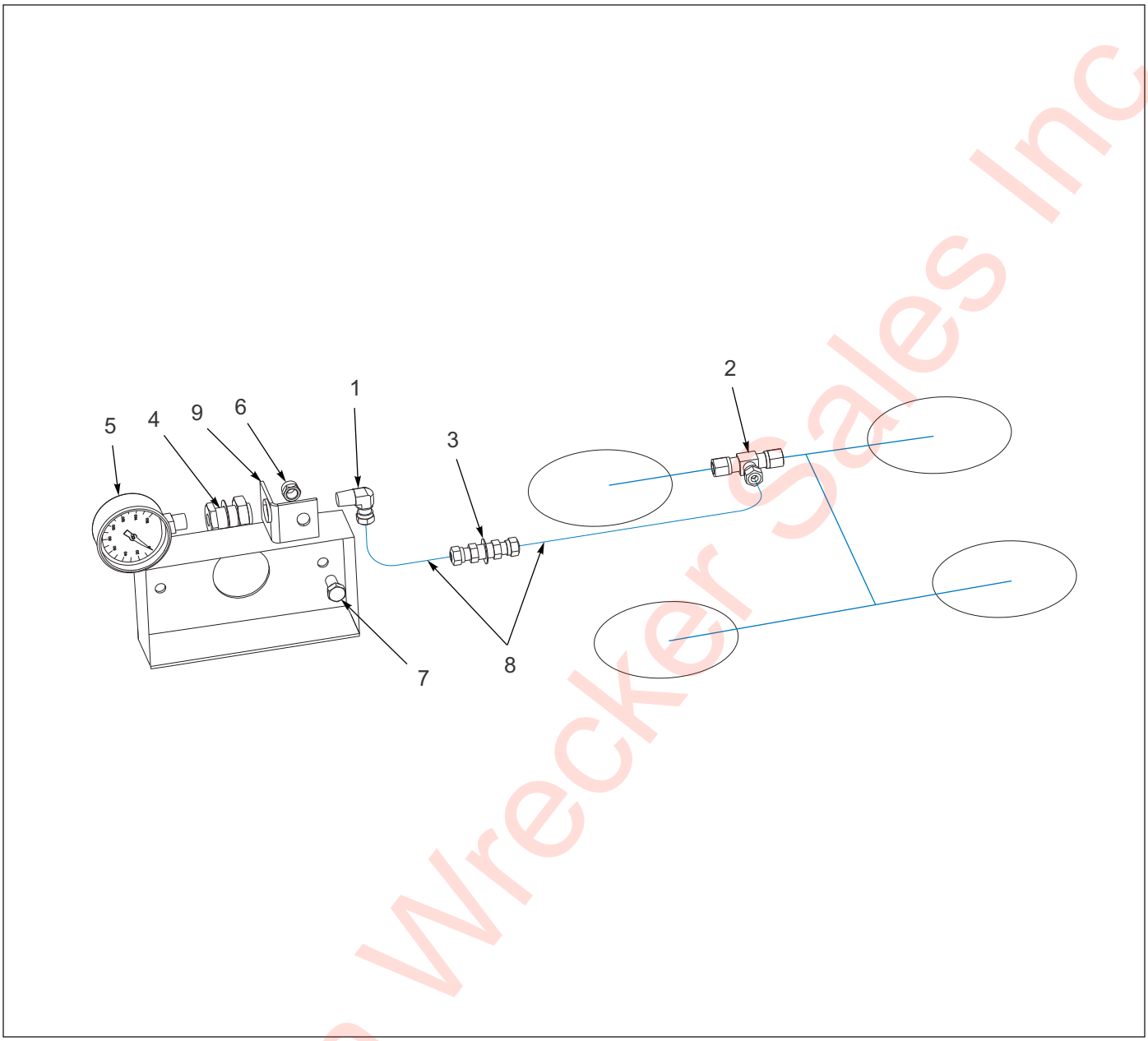

Figure 1-128: Pressure Gauge Installation

Pressure Gauge Installation

ITEM	PART NO.	DESCRIPTION	QTY.
	128601	PRESSURE GAUGE INSTALLATION	
1	1-297-010008-07	FITTING, AIR 90	1
2	1-297-010010-04	FITTING, AIR UNION TEE	1
3	1-297-010014-02	FITTING, AIR	1
4	1-297-010022-02	FITTING, AIR ANCHOR	1
5	1-323-010008	GAUGE, PRESSURE 0 - 160 PSI	1
6	1-512-010005-05	NUT, HEX LOCK 3/8-16 GRB	1
7	1-654-010051-03	SCREW, HEX HEAD CAP 3/8-16 X 3/4 GR5	1
8	1-833-010002	TUBING NYLON 3/8	AR
9	3-120-010445	BRACKET, PRESSURE REGULATOR	1

Eastern Wrecker Sales Inc

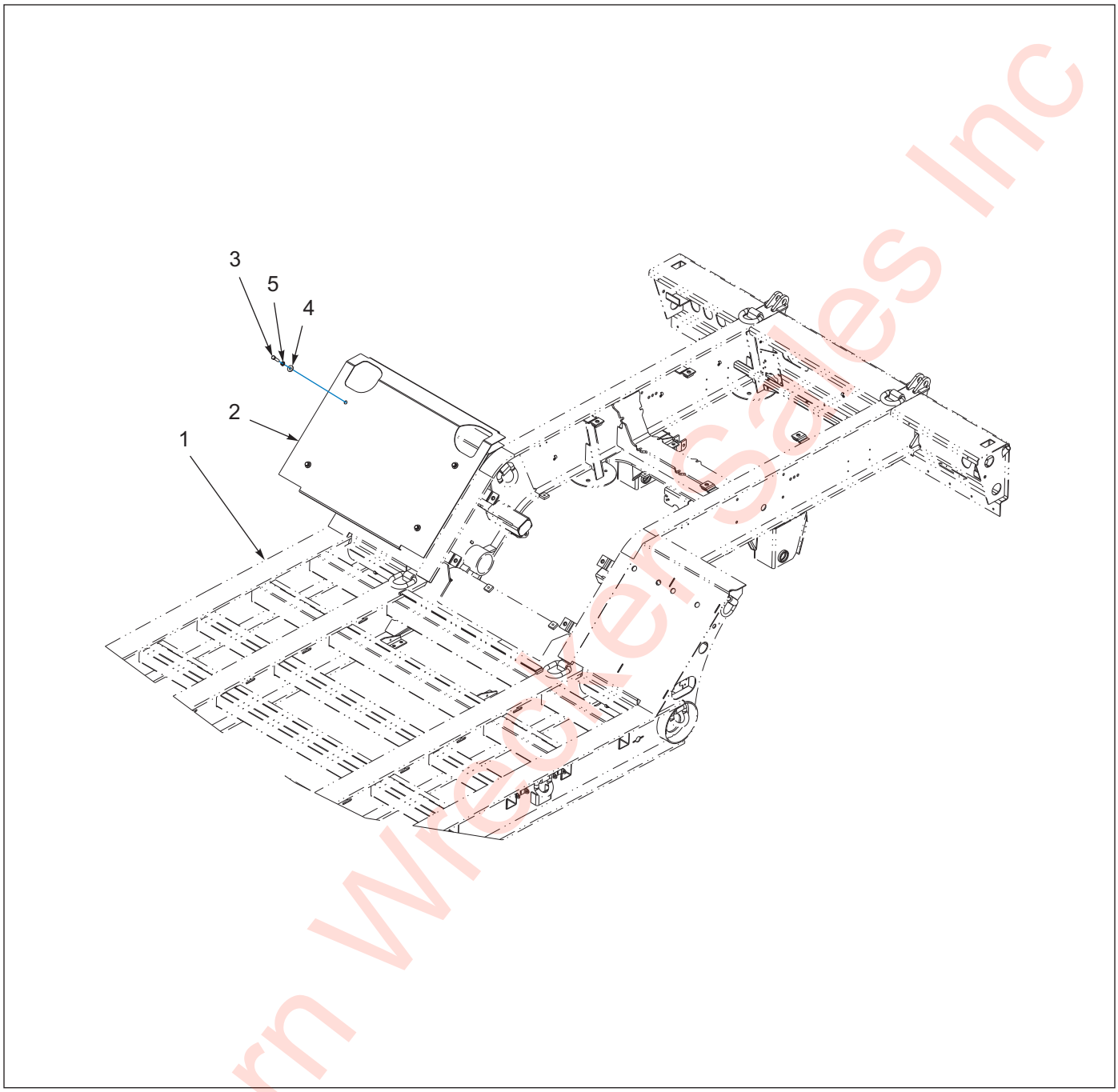

Figure 1-129: Slope Cover Assembly

Slope Cover Assembly

ITEM	PART NO.	DESCRIPTION	QTY.
	135811	SLOPE COVER ASSEMBLY	
1	-----	FRAME WELDMENT	1
2	135812	PLATE, SLOPE COVER	1
3	1-654-010055-05	SCREW, HEX HEAD CAP 1/2-13 X 2 GR5	4
4	1-861-010032-15	WASHER, FLAT 1/2W	4
5	1-861-010034-13	WASHER, SPLIT LOCK 1/2	4

Eastern Wrecker Sales Inc

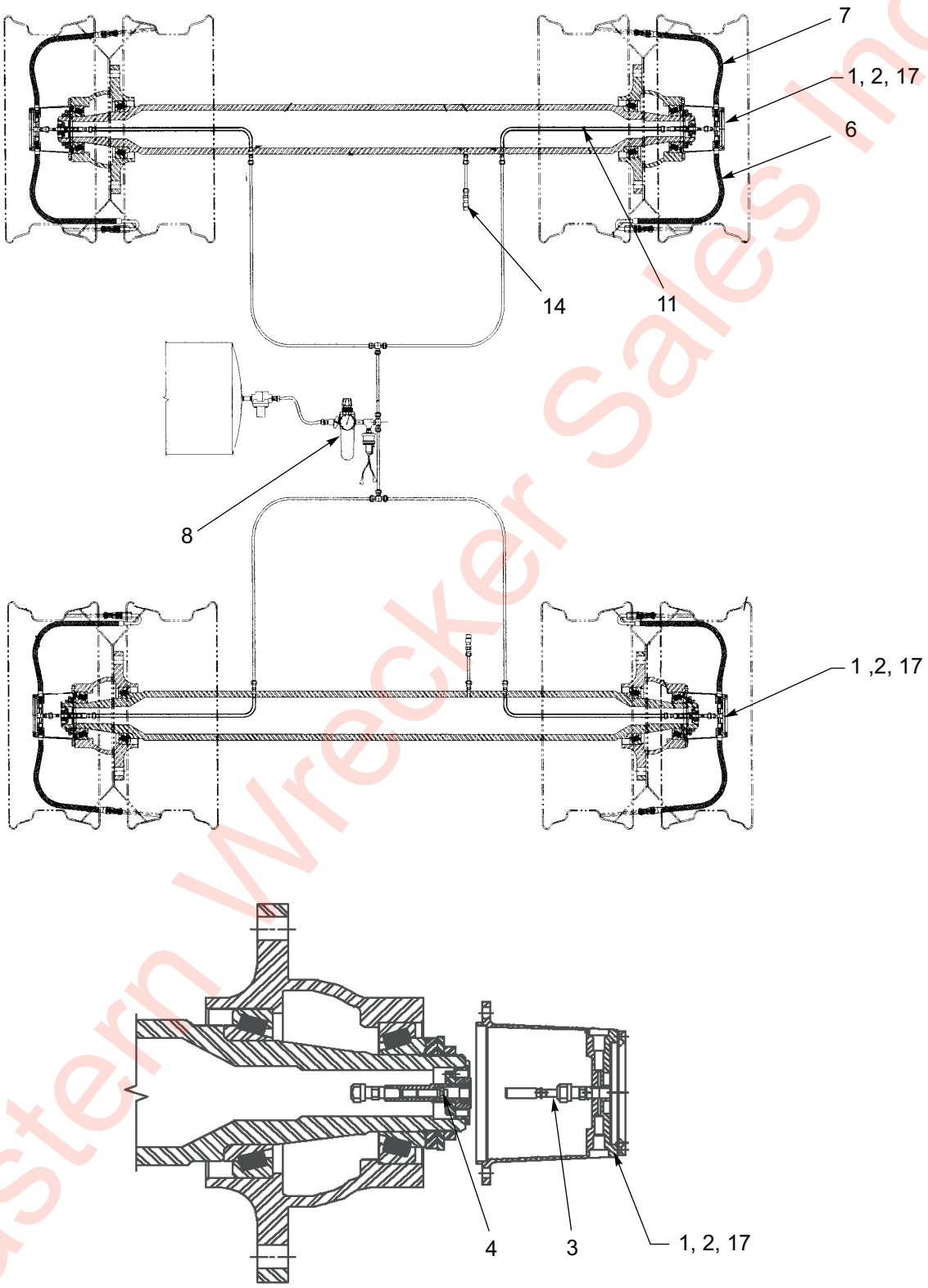

Figure 1-130: Tire Inflation System

Eastern Wrecker Sales Inc

Tire Inflation System

ITEM	PART NO.	DESCRIPTION	QTY.		
	157700	TIRE INFLATION SYSTEM FLIP AXLE	*		
	155702	TIRE INFLATION SYSTEM 2AX		*	
	157703	TIRE INFLATION SYSTEM 3AX			*
1	139529	HUB CAP ASSEMBLY, LOW PROFILE 5.5” OIL	2	4	6
2	157704	GASKET, HUB CAP	2	4	6
3	157705	ROTATING SHAFT, UNIVERSAL	2	4	6
4	157706	SPINDLE PLUG, 1.75”	2	4	6
5	157707	AIR CYLINDER ASSEMBLY **(NOT SHOWN)**	2	4	6
6	159338	HOSE ASSEMBLY, OUTER TIRE	2	4	6
7	159337	HOSE ASSEMBLY, INNER TIRE	2	4	6
8	148416	REGULATOR ASSEMBLY W/ BALL VALVE	1	1	1
9	-----	WARNING LIGHT WIRE **(NOT SHOWN)**	1	1	1
10	-----	NYLON AIR TUBE **(NOT SHOWN)**	1	1	1
11	-----	CHAFE GUARD	1	1	1
12	-----	LARGE WIRE TIES **(NOT SHOWN)**	1	2	3
13	148417	TRIPLE AXLE HARDWARE KIT **(NOT SHOWN)**	--	1	1
13	148413	DUAL AXLE HARDWARE KIT **(NOT SHOWN)**	--	1	1
14	-----	AXLE VENT	1	1	1
15	145677	LIGHT PRESSURE GUARD **(NOT SHOWN)**	1	1	1
16	154653	PRESSURE SWITCH **(NOT SHOWN)**	1	1	1
17	085-002-02	RUBBER PLUG	2	4	6
18	194159	SPINDLE PLUG W/ ROTATING SHAFT KIT **(NOT SHOWN)** (INCLUDES ITEMS 3 & 4)	2	4	6

Eastern Wrecker Sales Inc

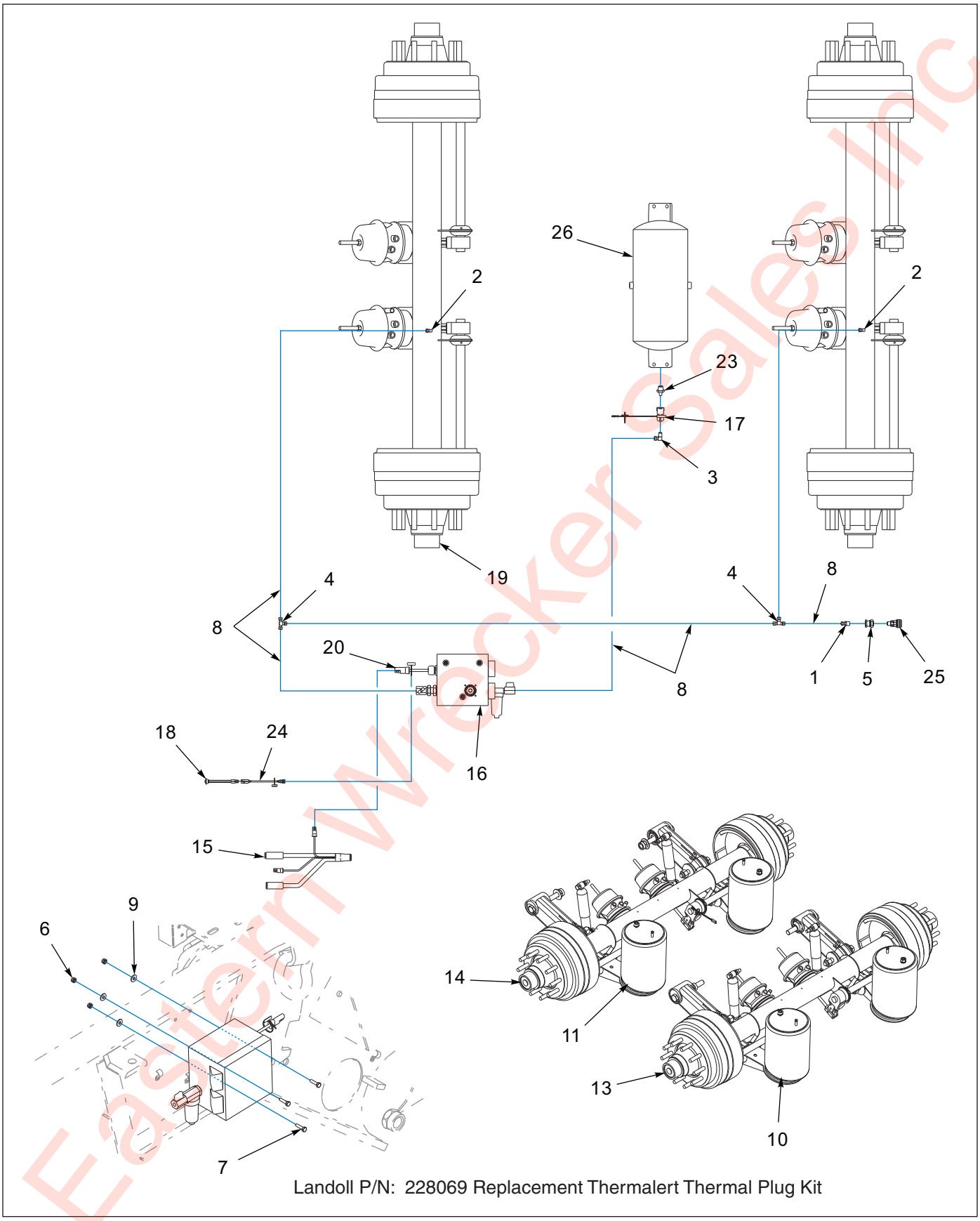

Figure 1-131: Thermalert Tire Inflation System

Eastern Wrecker Sales Inc

Thermalert Tire Inflation System

ITEM	PART NO.	DESCRIPTION	QTY.
	210147	SUSP ASSY RLU-250-800 TAN MTIS **(PAVER & CONSTRUCTION)**	
1	1-297-010007-06	FITTING,AIR,1/4TUBE TO 3/8NPT	1
2	1-297-010008-05	FITTING,AIR 90 1/4TUBEX1/8NPT	REF
3	1-297-010008-07	FITTING AIR 90 1/4TUBEX1/4NPT	REF
4	1-297-010010-01	FITTING,AIR,UNION TEE 1/4	1
5	1-297-010022-03	FITTING,AIR ANCHR CPLG, 3/8NPT	1
6	1-512-010005-01	NUT,HEX,SLFLKG GRB 1/4-20	3
7	1-654-010047-06	SCREW,HX CP 1/4-20UNCX1 GR5	3
8	1-833-010001	TUBING NYLON 1/4 OD	REF
9	1-861-010032-07	WASHER,FLAT 1/4 ZP	3
10	110618	SUSPENSION,FASTNR,RLU 250-9-4	1
11	110622	SUSPENSION,FASTNR,RLU 250FMT	1
12	115629	LOCKTITE 592 250ML TUBE **(NOT SHOWN)**	REF
13	138692	WINCH 20K,AT,AS,ROLLER W/RMT	1
14	142891	AXLE WLDMT 2516 SPG 79FMT TIS	1
15	143103	HARNESS ECHAIN GROTE	REF
16	168593	THERMALERT TIS 2 AXLE	1
17	168610	THERMALERT PRESS PROT VALVE	REF
18	183413	LIGHT,WHT LED .75 CL/MK GROTE	1
19	197613	HUB CAP MTIS OIL AXLE	4
20	202207	HARNESS ASSY MOD MTIS POWER	1
21	205836	ORANGE WARNING DECAL MTIS **(NOT SHOWN)**	REF
22	205837	YELLOW WARNING DECAL MTIS **(NOT SHOWN)**	REF
23	2083-8-4S	NIPPLE HEX 1/2PIPE - 1/4PIPE	REF
24	208362	HARNESS MOD, MTIS, 800	1
25	3-220-010004	COUPLER AIR FEMALE 3/8-18MPT	1
26	3-780-010002	TANK AIR 9.5X22.5 .5NPT PORTS	REF

Eastern Wrecker Sales Inc

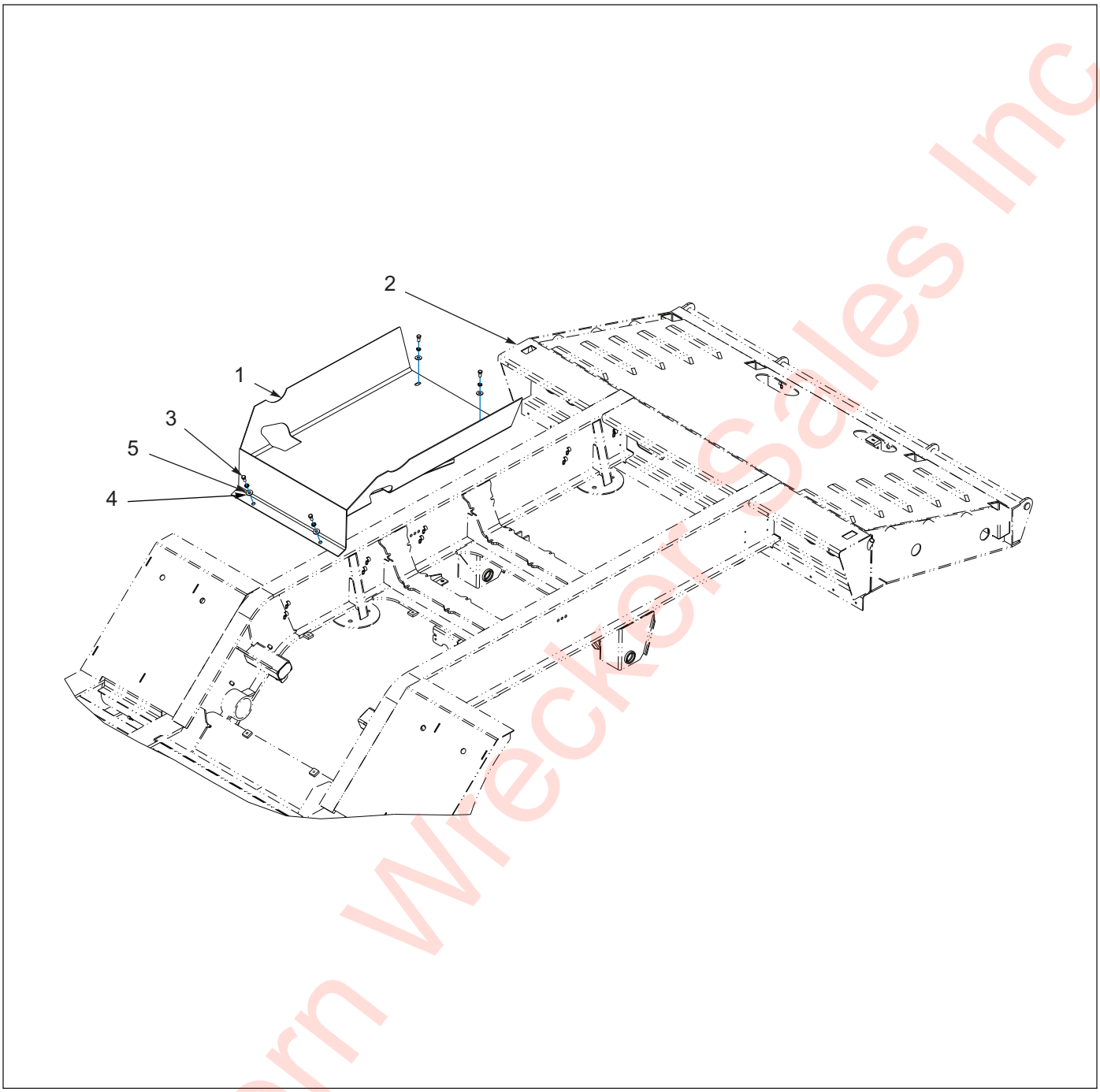

Figure 1-132: Tray Assembly

Tray Assembly

ITEM	PART NO.	DESCRIPTION	QTY.
	135261	TRAY ASSEMBLY - 835AG	
1	135260	TRAY WELDMENT, BOOM TROUGH	1
2	-----	FRAME WELDMENT	1
3	1-654-010055-01	SCREW, HEX HEAD CAP 1/2-13 X 1 GR5	4
4	1-861-010032-15	WASHER, FLAT 1/2W	4
5	1-861-010034-13	WASHER, SPLIT LOCK 1/2	4

Eastern Wrecker Sales Inc

Index

Numerics

0013007 . . . . . 1-191, 1-199
005-096-00 1-115
005-098-00 1-115
005-099-00 1-115
006-114-00 1-115
006-115-00 1-115
010-052-00 1-115
014-065-00 1-115
034-057-01 1-115
034-058-01 1-115
040-180-00 1-115
046-096-00 1-115
046-097-00 1-115
056-018-00 1-115
0600-250-01000 . . . . . 1-203, 1-207
069-078-00 1-115
071-122-00 1-115
085-002-02 1-225
1/4-20WN 1-166
1/4-20X1-1/4 CB 1-166
1/4X3 1-36
10030 1-177
100600 1-146
100696 1-212
1-007-010006 1-221
10078 . . . . . 1-150, 1-153
100855 . . . . . 1-8, 1-22
101003 . . . . . 1-43, 1-87
101299 1-22
101528 . . . 1-18, 1-32, 1-47, 1-61, 1-77, 1-91, 1-103, 1-124
101847 . . . . . 1-106, 1-115
101848 1-106
101849 1-106
101855 1-5
102-0323 1-166
102-0511 1-166
102-1112 1-147
102-1238 1-147
102186 1-147
102732 . . 1-45, 1-59, 1-73, 1-75, 1-89, 1-101, 1-107
103738 . . . . . 1-69, 1-71, 1-87
103805 1-115
103817 1-39
103861 1-106
104-0505 1-166
104252 . . . . . 1-51, 1-141, 1-208
104253 . . . . . 1-51, 1-141, 1-208
104370 . . . . . 1-32, 1-159
1046 1-155
105-0105 1-166
105132 . . . . . 1-39, 1-51, 1-65, 1-95
105193 1-133
105195 . . . . . 1-146, 1-158
105237 . . . . . 1-8, 1-22
105239 1-8
105241 1-8
105242 1-8
105243 . . . . . 1-8, 1-22
105245 . . . . . 1-8, 1-22
105272 1-8
105275 1-18
105276 1-177
105281 . . . . . 1-5, 1-8
105282 . . . . . 1-5, 1-8
105283 . . . . . 1-5, 1-8
105285 1-8
105297 1-212
105479 . . . . 1-18, 1-32, 1-172, 1-175, 1-212, 1-221

Eastern Wrecker Sales Inc

105480 ..... *1-18, 1-32, 1-172, 1-175, 1-212, 1-221*
105481 ..... *1-18, 1-32, 1-172, 1-212, 1-221*
105482 ..... *1-18, 1-32, 1-172, 1-212, 1-221*
105483 ..... *1-18, 1-32*
105822 ..... *1-5, 1-8, 1-212*
1-060-010004 ..... *1-166*
106-0078 ..... *1-166*
106611 ..... *1-39, 1-65*
106654 ..... *1-212*
106655 ..... *1-212*
106657 ..... *1-5*
106759 ..... *1-221*
106760 ..... *1-221*
106943 ..... *1-8*
106955 ..... *1-205*
106956 ..... *1-153*
107-0039 ..... *1-133, 1-135, 1-137*
107498 ..... *1-221*
107499 ..... *1-221*
107500 ..... *1-221*
107513 ..... *1-221*
107887 ..... *1-8, 1-14, 1-22, 1-28*
108295 ..... *1-172*
108336 ..... *1-180, 1-181*
108417 ..... *1-162*
108439 ..... *1-158*
108601 ..... *1-172*
108801 *1-14, 1-28, 1-43, 1-55, 1-69, 1-71, 1-87, 1-99*
108802 *1-14, 1-28, 1-43, 1-55, 1-69, 1-71, 1-87, 1-99*
108859 ..... *1-141*
1-1/4ST ELL *1-221*
110-0116 ..... *1-172*
110-0253 ..... *1-172*
110-4337 ..... *1-166*
110448 ..... *1-154*
110451 ..... *1-154*
110452 ..... *1-150, 1-154*
110526 ..... *1-200, 1-201*
110527 ..... *1-200*
110578 ..... *1-172*
110615 ..... *1-111, 1-113*
110616 ..... *1-113*
110617 ..... *1-113*
110618 ..... *1-51, 1-81, 1-95, 1-113, 1-119, 1-227*
110620 ..... *1-111*
110621 ..... *1-111*
110622 ..... *1-51, 1-81, 1-95, 1-111, 1-227*
110975 ..... *1-117*
110976 ..... *1-117*
110996 ..... *1-177, 1-179*
111008 ..... *1-111, 1-113*
111021 ... *1-45, 1-59, 1-73, 1-75, 1-81, 1-101, 1-107*
111025 ..... *1-113*
111026 ..... *1-113*
111027 ..... *1-111*
111028 ..... *1-111*
111029 ..... *1-111*
111030 ..... *1-113*
111031 ..... *1-113*
111033 ..... *1-111, 1-113*
111034 ..... *1-111*
111035 ..... *1-111*
111036 ..... *1-111, 1-113*
111037 ..... *1-111*
111038 ..... *1-111*
111-1267 ..... *1-166*
11117 ..... *1-149*
11128 ..... *1-149*
11129 ..... *1-149*
11130 ..... *1-149*
11133 ..... *1-149*
111382 ..... *1-205, 1-213*
111390 ..... *1-213*
111416 ..... *1-117*
111417 ..... *1-117*
11142 ..... *1-149*

Eastern Wrecker Sales Inc

11144 1-149
111652 1-117
112172 . . . . . 1-175, 1-177
112174 1-177
112175 1-177
112184 1-175
112193 1-188
112248 1-177
112324 . . . . . 1-109, 1-185
112325 1-109
112326 . . . . . 1-75, 1-109, 1-188
11240 1-150
112529 1-117
112598 . . . . . 1-141, 1-191
112599 . . . . . 1-141, 1-191
112621 1-141
112986 1-215
112987 1-215
113026 1-141
11308 1-149
11309 1-153
11310 1-153
113109 1-117
113479 1-207
113536 1-117
11368 1-149
113856 1-172
11398 1-154
11402 1-153
11407 1-153
11411 1-153
11419 1-153
11420 1-153
11421 1-153
11425 1-153
11426 1-154
11429 1-153
11430 1-153
11431 1-153
11434 1-153
11440 1-153
11441 1-153
11446 1-153
114584 . . . . . 1-43, 1-55, 1-87, 1-99, 1-106
114586 . . . . . 1-69, 1-71, 1-106
114588 1-106
114723 . . . . . 1-133, 1-135
114724 1-133
114741 1-143
114814 . . . . . 1-172, 1-219
114815 . . . . . 1-172, 1-177
114987 1-127
115629 1-227
115717 1-115
115722 1-115
115752 . . . . . 1-51, 1-81, 1-95
115756 . . . . . 1-51, 1-81, 1-95, 1-119
115877 . . . . . 1-172, 1-219
11599 1-153
116100 1-127
116326 1-172
116328 1-172
116330 1-172
117304 . . . . . 1-55, 1-69, 1-87, 1-99
117838 . . . . . 1-14, 1-28
117839 . . . . . 1-14, 1-28
117873 1-173
11791 1-154
118006 1-177
1-181-010046-7 1-172
118-2659-9 . . . . . 1-55, 1-69, 1-71, 1-87, 1-99
11837 1-149
118-7429 1-177
119206 1-173
119445 1-173
119553 1-173

Eastern Wrecker Sales Inc

120659 1-173
120660 1-173
120661 1-173
120675 1-133
12073 1-153
12075 1-149
120800 1-141
120819 1-141
121002 1-32
121031 . . . . . 1-129, 1-147
121355 1-32
12146 1-154
12-16 070120 1-221
123109 . . . . . 1-18, 1-32
123717 1-81
123869 1-81
12412408 1-219
12412409 1-219
124155 1-39
1-242-010180-3 . . . . . 1-127, 1-129, 1-131
12420301-017 . . . . . 1-5, 1-119
124549 1-153
12465 1-153
12486400-520 . . . . . 1-111, 1-113
12486400-521 . . . . . 1-111, 1-113
12486400-526 . . . . . 1-111, 1-113
125130 . . . . . 1-175, 1-221
125520 1-51
125659 1-147
125833 1-201
125836 1-201
125871 1-32
125894 . . . . . 1-8, 1-158
1-271-010005-05 1-166
12767 1-154
12783 1-153
127844 1-141
127854 1-141
12817 1-149
128433 1-111
128434 1-113
128601 1-222
128711 1-141
128712 1-141
128774 1-173
128797 1-141
128798 1-141
128868 1-5
128874 . . . . . 1-36, 1-119, 1-127, 1-139, 1-181
128886 . . . . . 1-183, 1-217
129004 . . . . . 1-111, 1-113
129005 1-113
129006 . . . . . 1-111, 1-113
129146 1-127
129264 1-173
129293 1-141
129310 1-141
129312 1-133
1-295-010001 . . . . . 1-166, 1-172, 1-175, 1-221
1-295-010002 1-221
129698 1-129
1-297-010004-04 . . . . . 1-14, 1-28
1-297-010004-07 1-43
1-297-010007-05 . . . 1-75, 1-89, 1-93, 1-109, 1-158, 1-185, 1-188
1-297-010007-06 1-14, 1-28, 1-89, 1-93, 1-125, 1-227
1-297-010007-11 . . . . . 1-89, 1-93
1-297-010007-12 . . . . . 1-87, 1-122
1-297-010007-15 1-87
1-297-010008-05 . . . . 1-14, 1-28, 1-59, 1-89, 1-101, 1-109, 1-185, 1-227
1-297-010008-07 . 1-14, 1-28, 1-45, 1-49, 1-59, 1-63, 1-73, 1-75, 1-79, 1-101, 1-105, 1-109, 1-130, 1-159, 1-185, 1-222, 1-227
1-297-010008-09 . . . . . 1-59, 1-63, 1-101, 1-105
1-297-010008-18 . 1-14, 1-28, 1-43, 1-55, 1-69, 1-71, 1-87, 1-99, 1-123, 1-185

Eastern Wrecker Sales Inc

1-297-010008-20 *1-14, 1-28, 1-43, 1-55, 1-69, 1-71, 1-87, 1-99, 1-122, 1-130*
1-297-010008-21 . . . . . *1-89, 1-93*
1-297-010008-23 . . . . . *1-55, 1-87, 1-99, 1-130*
1-297-010008-24 . . . . . *1-55, 1-87, 1-99, 1-130*
1-297-010008-26 . . . . *1-55, 1-69, 1-87, 1-99, 1-130*
1-297-010009-03 . . . . . *1-14, 1-28*
1-297-010010-01 *1-14, 1-28, 1-49, 1-63, 1-75, 1-79, 1-93, 1-105, 1-109, 1-125, 1-159, 1-188, 1-227*
1-297-010010-03 . . . . . *1-73, 1-75, 1-89*
1-297-010010-04 *1-45, 1-59, 1-73, 1-89, 1-101, 1-222*
1-297-010010-06 . . . . . *1-55, 1-69, 1-71, 1-87, 1-99*
1-297-010011-02 . . . . . *1-185*
1-297-010011-04 . . . . *1-45, 1-59, 1-73, 1-75, 1-101, 1-123, 1-185*
1-297-010013-11 *1-45, 1-59, 1-73, 1-75, 1-89, 1-101*
1-297-010013-12 . . . . . *1-55, 1-99, 1-123*
1-297-010013-16 . . . . . *1-43, 1-55, 1-69, 1-71, 1-99*
1-297-010014-02 . . . . . *1-222*
1-297-010015-02 . . . . . *1-185*
1-297-010015-06 . . . . . *1-14, 1-28*
1-297-010015-07 *1-43, 1-55, 1-69, 1-71, 1-87, 1-99, 1-130*
1-297-010017-03 . . . . . *1-122*
1-297-010018-02 . . . . . *1-109*
1-297-010018-03 . . . . . *1-69, 1-71*
1-297-010020-02 . . . . . *1-14, 1-28, 1-89, 1-93*
1-297-010022-02 . . . . *1-14, 1-28, 1-89, 1-93, 1-222*
1-297-010022-03 *1-43, 1-55, 1-59, 1-63, 1-69, 1-71, 1-87, 1-89, 1-93, 1-99, 1-101, 1-105, 1-123, 1-125, 1-227*
1-297-010033-03 . . . . . *1-14, 1-28*
1-298-010001-1 . . . . . *1-22*
129874 . . . . . *1-141*
129875 . . . . . *1-141*
129877 . . . . . *1-133*
129879 . . . . . *1-201*
129893 . . . . . *1-191, 1-199*
129894 . . . . . *1-191, 1-199*
129895 . . . . . *1-191*
13005 . . . . . *1-149*
130054 . . . . . *1-208, 1-210*
130055 . . . . . *1-208, 1-210*
130116 . . . . . *1-11, 1-25, 1-192, 1-194, 1-197*
13028 . . . . . *1-150, 1-154*
130284 . . . . . *1-139*
130536 . . . . . *1-146, 1-158*
131151 . . . . . *1-133*
131195 . . . . . *1-183, 1-217*
1-316-010013 . . . . . *1-172*
1-323-010008 . . . . . *1-222*
132833 . . . . . *1-158*
133458 . . . . . *1-127*
134144 . . . . . *1-111*
13424 . . . . . *1-150, 1-154*
1-343-010001 . . . . . *1-177, 1-197*
134657 . . . . . *1-158*
13468 . . . . . *1-149*
134757 . . . . . *1-117*
135184 . . . . . *1-158*
135260 . . . . . *1-228*
135261 . . . . . *1-228*
135267 . . . . . *1-215*
135268 . . . . . *1-215*
135777 . . . . . *1-201*
135811 . . . . . *1-223*
135812 . . . . . *1-223*
13680 . . . . . *1-150*
136870 . . . . . *1-183, 1-217*
136871 . . . . . *1-183, 1-217*
136908 . . . . . *1-183, 1-217*
137108 . . . . . *1-117*
137461 . . . . . *1-115*
137485 . . . . . *1-115*
138090 . . . . . *1-115*
138155 . . . . . *1-124*
1-382-010035-06 . . . . . *1-158*
138209 . . . . . *1-173*

Eastern Wrecker Sales Inc

13839 1-149
1-384-010038024 . . . . . 1-55, 1-69, 1-87, 1-99
1-384-010038030 . . . . . 1-87, 1-123, 1-125
1-384-010038038 . . . . . 1-55, 1-69, 1-71, 1-87, 1-99
1-384-010038042 1-69
1-384-010038054 . . . . . 1-55, 1-87, 1-99
1-384-010038056 . . . . . 1-14, 1-28, 1-122
1-384-010038060 . . . . . 1-43, 1-55, 1-69, 1-71, 1-99
1-384-010038072 . . . . . 1-69, 1-71, 1-122
1-384-010038084 . 1-43, 1-55, 1-69, 1-71, 1-87, 1-99
1-384-010038120 1-69
138692 1-227
138711 . . . . . 1-8, 1-18, 1-33
138814 . . . . . 1-14, 1-28
138956 1-115
138960 1-115
138962 1-119
139132 1-199
139133 1-199
139140 1-166
139383 1-115
139413 1-207
139414 1-207
139478 1-154
139479 1-153
139529 1-225
139600 1-117
139619 1-207
139628 1-207
139630 1-207
139631 1-207
1-397-010301024 1-175
1-397-010301100 1-221
1-397-010301114 1-18
1-397-010301136 1-32
1-397-010302042 1-177
1-397-010302060 . . . . . 1-166, 1-175
1-397-010302064 . . . . . 1-129, 1-130
1-397-010304016 1-166
1-397-010304018 1-172
1-397-010304060 1-172
1-397-010305060 . . . . . 1-166, 1-175
1-397-010305156 1-32
1-397-010305164 1-18
1-397-010312032 1-172
1-397-010318018 1-166
139822 1-207
139823 1-207
139826 1-207
139829 1-207
139830 1-207
139833 1-207
140242 1-210
140243 1-210
140275 1-207
140278 1-207
140281 1-207
140369 . . . . . 1-75, 1-185, 1-188
140380 1-207
140381 . . . . . 1-207, 1-208
140382 1-207
140391 1-207
140393 1-208
140450 . . . . . 1-75, 1-189
1406044 1-18
140927 1-207
140929 1-207
142064 1-217
142065 1-217
142441 . . . . . 1-18, 1-32, 1-124
142465 . . . . . 1-18, 1-32
142545 . . . 1-18, 1-32, 1-47, 1-61, 1-77, 1-91, 1-103, 1-124
142553 . . . . . 1-47, 1-61, 1-77, 1-91, 1-103, 1-124
142891 1-227
143100 . . . . . 1-11, 1-25

Eastern Wrecker Sales Inc

143101 . . . . . 1-11, 1-25, 1-162
143102 . . 1-41, 1-53, 1-67, 1-85, 1-97, 1-191, 1-199
143103 . . . . . 1-41, 1-53, 1-67, 1-85, 1-97, 1-227
143104 . . . . . 1-192, 1-194
143114 . . 1-41, 1-53, 1-67, 1-85, 1-97, 1-121, 1-197
143121 . . . . . 1-11, 1-25, 1-67, 1-197
143123 . . . . . 1-67, 1-85, 1-97, 1-121
143163 1-147
143670 . . . . . 1-181, 1-183
143671 . . . . . 1-181, 1-183
143850 1-173
144608 . . . . . 1-192, 1-194, 1-197
144609 1-67
144736 1-166
144937 1-188
144979 1-115
145499 . . . . . 1-203, 1-205
145677 1-225
146897 . . . . . 1-11, 1-25, 1-53, 1-85, 1-97
146898 . . . . . 1-41, 1-53, 1-67, 1-85, 1-97, 1-121
146909 1-207
146922 . . . . . 1-47, 1-61, 1-77, 1-103
146929 . . . . . 1-53, 1-85, 1-97, 1-197
146931 1-191
146932 1-199
147072 1-205
147304 1-183
147372 1-131
147377 1-131
147464 1-106
147582 1-129
147883 1-127
148028 1-127
148036 1-129
148043 1-129
148044 1-129
148045 1-129
148072 1-139
148138 1-33
148139 1-33
148413 1-225
148416 1-225
148417 1-225
148786 1-200
148787 1-200
148811 . . . . . 1-36, 1-127
148890 1-139
150057 1-127
150058 1-127
150059 1-127
150076 . . . . . 1-8, 1-22
150083 1-129
150093 1-162
150095 1-141
150108 1-141
150114 . . . . . 1-192, 1-194
150116 . 1-41, 1-53, 1-67, 1-85, 1-97, 1-121, 1-191, 1-192, 1-194, 1-199
150117 . . . . 1-11, 1-25, 1-158, 1-192, 1-194, 1-197
150118 1-192
1-510-010001 . . . 1-14, 1-28, 1-32, 1-39, 1-51, 1-55, 1-69, 1-81, 1-87, 1-95, 1-99, 1-183, 1-217
1-510-010003-09 . . . 1-36, 1-81, 1-119, 1-127, 1-139
1-512-010002-09 1-158
1-512-010002-14 1-207
1-512-010003-06 . . . . . 1-109, 1-185
1-512-010004-03 . . . . . 1-172, 1-177
1-512-010005-01 . . 1-8, 1-22, 1-39, 1-41, 1-45, 1-53, 1-59, 1-67, 1-81, 1-85, 1-97, 1-101, 1-107, 1-121, 1-158, 1-166, 1-191, 1-199, 1-205, 1-227
1-512-010005-03 . 1-11, 1-25, 1-53, 1-75, 1-85, 1-97, 1-109, 1-129, 1-166, 1-177, 1-179, 1-188, 1-203
1-512-010005-05 . . 1-8, 1-14, 1-18, 1-22, 1-32, 1-43, 1-47, 1-55, 1-61, 1-65, 1-69, 1-71, 1-77, 1-81, 1-93, 1-99, 1-103, 1-119, 1-129, 1-146, 1-166, 1-172, 1-177, 1-180, 1-181, 1-199, 1-203, 1-208, 1-209, 1-210, 1-221, 1-222

Eastern Wrecker Sales Inc

1-512-010005-09 .... *1-22, 1-39, 1-65, 1-81, 1-133, 1-135, 1-137, 1-143, 1-146, 1-158, 1-166, 1-172, 1-181, 1-183, 1-197, 1-201, 1-205, 1-207, 1-213, 1-215, 1-217, 1-221*

1-512-010005-13 *1-133, 1-135, 1-137, 1-139, 1-219*

1-512-010005-15 .... *1-8, 1-22, 1-39, 1-113, 1-146, 1-158, 1-200, 1-201, 1-216*

1-512-010005-19 ..... *1-175, 1-177, 1-179*

1-512-010007-03 *1-41, 1-53, 1-67, 1-85, 1-97, 1-119, 1-121*

1-512-010007-05 *1-49, 1-63, 1-73, 1-75, 1-79, 1-93, 1-105, 1-166*

1-512-010007-06 ..... *1-166, 1-203*

1-512-010007-09 ..... *1-113, 1-200*

1-512-010007-12 ..... *1-8, 1-22*

153018 ..... *1-8*

153032 ..... *1-166*

1-533-010001 ..... *1-141, 1-143*

154166 ..... *1-153*

154653 ..... *1-225*

155036 ..... *1-139*

155061 ..... *1-8*

155064 ..... *1-133*

155107 ..... *1-193*

155273 ..... *1-139*

155274 ..... *1-139*

155628 ..... *1-191*

1-557-010014 ..... *1-143, 1-215*

1-557-010362-63 ..... *1-127, 1-215*

1-557-010362-65 ..... *1-203, 1-209*

155702 ..... *1-225*

155780 ..... *1-5, 1-119*

1-560-010002-02 .... *1-14, 1-28, 1-87, 1-99, 1-130*

1-560-010002-03 .... *1-43, 1-55, 1-69, 1-71, 1-172*

1-560-010002-04 *1-43, 1-49, 1-55, 1-69, 1-71, 1-87, 1-99, 1-122, 1-130, 1-221*

1-560-010002-05 ... *1-43, 1-69, 1-71, 1-166, 1-221*

1-560-010002-07 ..... *1-221*

156069 ..... *1-193*

156430 ..... *1-8, 1-22*

157700 ..... *1-125, 1-225*

157702 ..... *1-49, 1-63, 1-93, 1-105*

157703 ..... *1-79, 1-225*

157704 ..... *1-225*

157705 ..... *1-225*

157706 ..... *1-225*

157707 ..... *1-225*

158581 ..... *1-18, 1-32*

158732 ... *1-39, 1-51, 1-65, 1-81, 1-95, 1-203, 1-205*

159337 ..... *1-225*

159338 ..... *1-225*

159522 ..... *1-183*

160048 ..... *1-141*

160065 ..... *1-141*

160070 ..... *1-212*

160366 ..... *1-22, 1-32, 1-34*

160396 ..... *1-216*

160666 ..... *1-141*

161165 ..... *1-22*

161168 ..... *1-22*

161172 ..... *1-22*

161797 ..... *1-124*

161825 ..... *1-189*

161830 ..... *1-189*

161833 ..... *1-189*

162037 ..... *1-22*

162038 ..... *1-22*

162039 ..... *1-22*

162049 ..... *1-216*

162051 ..... *1-216*

162056 ..... *1-8, 1-22*

162207 ..... *1-160, 1-161*

162208 ..... *1-160*

162210 ..... *1-160, 1-161*

162211 ..... *1-160, 1-161*

162213 ..... *1-160*

162214 ..... *1-160*

162215 ..... *1-160, 1-161*

Eastern Wrecker Sales Inc

162216 . . . . . 1-160, 1-161
162217 1-161
162218 . . . . . 1-160, 1-161
162219 . . . . . 1-160, 1-161
162220 1-160
162408 1-139
162409 1-139
162788 1-22
162941 . . . . . 1-160, 1-161
162942 1-161
162943 1-161
162944 1-161
162945 1-161
1-630-010021-01 1-8
163045 1-131
163472 1-153
163578 . . . . . 1-56, 1-87, 1-99
163996 1-197
164052 . . . . . 1-159, 1-197
164087 . . . . . 1-188, 1-189
164088 1-189
164090 1-189
164091 1-189
164092 . . . . . 1-75, 1-188, 1-189
164093 1-189
164393 1-139
164398 1-139
164399 1-139
164435 . . . . . 1-127, 1-129
164597 1-65
1-647-010004117 1-141
1-647-010004181 . . . . . 1-141, 1-208
1-647-010004221 . . . . . 1-8, 1-22
1-647-010004255 1-200
1-647-010004259 . . . . . 1-146, 1-158
164807 1-200
164814 1-200
164821 1-139
1-654-010032-4 1-39
1-654-010036-05 . . . . . 1-81, 1-93
1-654-010047-03 1-22
1-654-010047-04 . 1-8, 1-59, 1-73, 1-75, 1-81, 1-101, 1-107, 1-158
1-654-010047-05 . . . . . 1-8, 1-22
1-654-010047-06 . 1-41, 1-45, 1-49, 1-53, 1-63, 1-67, 1-79, 1-85, 1-93, 1-97, 1-105, 1-121, 1-162, 1-172, 1-191, 1-199, 1-205, 1-227
1-654-010047-10 1-158
1-654-010049-03 . . . . . 1-18, 1-32, 1-117
1-654-010049-05 . . . . 1-11, 1-25, 1-75, 1-109, 1-188
1-654-010049-06 1-11, 1-25, 1-53, 1-85, 1-97, 1-109
1-654-010049-09 1-129
1-654-010050-07 1-166
1-654-010051-03 1-222
1-654-010051-05 . . 1-8, 1-14, 1-47, 1-61, 1-77, 1-81, 1-103, 1-111, 1-113, 1-166, 1-177, 1-180, 1-181, 1-208, 1-210
1-654-010051-06 1-39, 1-51, 1-65, 1-81, 1-95, 1-146, 1-166, 1-172, 1-183, 1-217, 1-221
1-654-010051-07 . . . . 1-8, 1-81, 1-119, 1-191, 1-199
1-654-010051-08 . . 1-8, 1-22, 1-43, 1-55, 1-69, 1-71, 1-81, 1-87, 1-99, 1-119, 1-183, 1-217
1-654-010051-09 . . . . . 1-172, 1-203, 1-209
1-654-010051-12 1-81
1-654-010055-01 . 1-133, 1-135, 1-166, 1-215, 1-228
1-654-010055-02 . . . . . 1-127, 1-146, 1-158, 1-210
1-654-010055-03 1-137, 1-146, 1-166, 1-172, 1-181, 1-183, 1-200, 1-201, 1-215, 1-217, 1-221
1-654-010055-04 1-133, 1-137, 1-143, 1-146, 1-205, 1-207, 1-213, 1-221
1-654-010055-05 . . . 1-36, 1-39, 1-65, 1-135, 1-139, 1-143, 1-223
1-654-010055-07 . . . . . 1-133, 1-135, 1-137, 1-141
1-654-010055-10 . . . . . 1-119, 1-139
1-654-010055-13 . . . . . 1-36, 1-172, 1-207, 1-215
1-654-010055-15 1-215
1-654-010055-16 1-146
1-654-010055-17 1-146
1-654-010059-03 . . . . . 1-133, 1-135, 1-139

Eastern Wrecker Sales Inc

1-654-010059-04 1-207
1-654-010059-07 1-207
1-654-010059-11 . . . . . 1-133, 1-135, 1-139
1-654-010059-14 1-219
1-654-010059-17 1-137
1-654-010061-13 . . . . . 1-113, 1-146, 1-158
1-654-010065-17 . . . . . 1-175, 1-177, 1-179
1-654-010100015 1-166
1-654-010121-06 . . . . . 1-177, 1-179
1-654-010133-05 1-22
1-656-010003051 1-41, 1-53, 1-67, 1-85, 1-97, 1-109, 1-119, 1-121, 1-177, 1-185
1-660-010006 1-162
166766 1-173
166924 1-211
167-0022 1-143
167199 1-34
167200 1-34
167201 1-34
167367 1-139
167368 1-139
167391 1-111
167392 1-111
167420 1-143
167521 1-160
167631 1-133
167853 . . . . . 1-81, 1-87, 1-89
167878 1-143
167929 1-135
167965 . . . . . 1-191, 1-199
168024 1-209
168025 1-209
168039 1-209
168041 1-209
168043 1-143
168528 . . . . . 1-146, 1-158
168593 1-227
168610 1-227
168648 . . . . . 1-162, 1-163
168712 1-197
168713 1-197
168973 . . . . . 1-59, 1-89, 1-101
168975 1-163
168976 1-163
168979 1-163
169365 . . . . . 1-18, 1-32
169372 1-22
169404 1-219
169410 . . . . . 1-67, 1-85
169531 1-173
169532 1-173
169830 1-193
169853 . . . . . 1-25, 1-197
170109 1-173
170110 1-173
170111 1-173
170112 1-173
170115 1-113
171441 1-177
171704 1-219
171909 1-219
171910 1-137
171915 . . . . . 1-137, 1-146, 1-158
171965 1-219
171967 1-219
171975 1-180
171977 1-181
171984 . . . . . 1-180, 1-181
172063 1-209
172298 1-183
172588 1-143
172600 1-143
172614 1-143
172877 1-161
173519 1-146
173860 1-173

Eastern Wrecker Sales Inc

174019 . . . . . 1-180, 1-181
174020 . . . . . 1-180, 1-181
174021 1-180
174022 . . . . . 1-180, 1-181
174027 1-181
174031 1-137
174033 1-133
174034 1-139
174035 1-139
174043 1-158
174071 1-194
174072 1-5
174540 1-137
174545 1-183
174546 1-183
174607 1-203
174681 1-36
174718 1-81
175357 1-211
175361 1-211
175362 1-211
175363 1-211
175365 1-211
175366 1-211
175583 1-163
176474 . . . . . 1-49, 1-63, 1-79, 1-93, 1-105
178403 1-139
178404 1-139
178428 1-173
178434 1-179
178435 1-179
178436 1-179
178444 . . . . . 1-8, 1-22, 1-146, 1-158
178453 1-141
178638 1-173
178714 1-161
178715 . . . . . 1-160, 1-161
178716 1-161
178717 1-161
178718 1-160
178999 1-160
179000 1-160
179001 1-160
179014 1-65
179019 1-133
179055 1-141
179056 1-141
179090 1-173
1-796-010001 . . . . . 1-51, 1-65, 1-95
1-796-010002-01 1-162
1-796-010004-02 . . . . . 1-51, 1-89, 1-95
179856 1-141
179857 1-141
179858 1-141
179862 1-36
179866 1-36
179883 1-36
179885 1-36
179891 1-137
179902 . . . . . 1-41, 1-53, 1-67, 1-85, 1-97, 1-121, 1-197
179933 1-117
18002 . . . . . 1-150, 1-154
18009 1-149
18015 1-149
18016 1-149
18019 1-149
18020 1-149
18022 1-153
18024 1-149
180243 1-141
180258 1-141
180259 1-141
18026 1-149
180260 1-141
18027 1-149
18028 1-149

Eastern Wrecker Sales Inc

18029 1-149
18030 1-149
18032 1-149
18033 1-153
18034 1-153
18035 1-153
18039 1-149
18044 1-149
180469 1-133
18047 . . . . . 1-149, 1-153
180529 1-158
180532 . . . . . 1-133, 1-135, 1-139
18056 1-150
180570 . . 1-41, 1-53, 1-67, 1-85, 1-97, 1-121, 1-197
18078 1-149
180837 . . . . . 1-203, 1-205
180845 1-203
180846 1-203
180931 1-5
181220 1-203
182070 1-133
182072 1-137
182073 . . . . . 1-133, 1-135, 1-137
182074 . . . . . 1-133, 1-135
182090 1-137
182091 . . . . . 1-133, 1-135
182094 1-143
182121 1-203
182123 1-203
182125 1-205
182128 1-205
182137 1-205
182146 1-205
182153 1-205
182156 1-205
182159 1-205
182167 1-205
182170 1-203
1-822-010002 1-166
1-833-010001 . . . 1-14, 1-28, 1-45, 1-49, 1-59, 1-63, 1-73, 1-75, 1-79, 1-89, 1-93, 1-101, 1-105, 1-109, 1-125, 1-159, 1-185, 1-188, 1-227
1-833-010002 . . . 1-14, 1-28, 1-43, 1-45, 1-55, 1-59, 1-69, 1-71, 1-73, 1-75, 1-87, 1-89, 1-93, 1-99, 1-101, 1-122, 1-123, 1-222
1-833-010003 . . . 1-43, 1-55, 1-69, 1-71, 1-87, 1-99
183413 1-227
183605 1-205
183720 1-139
183721 1-139
184237 1-143
184390 1-143
185001 1-81
185059 . . . . . 1-11, 1-25
186009 . . . . . 1-133, 1-135, 1-137
1-861-010032-03 . . . . . 1-166, 1-177
1-861-010032-06 . . . . . 1-162, 1-205
1-861-010032-07 . . 1-8, 1-22, 1-41, 1-45, 1-49, 1-53, 1-63, 1-67, 1-73, 1-75, 1-79, 1-85, 1-93, 1-97, 1-105, 1-121, 1-158, 1-166, 1-227
1-861-010032-08 . . . . . 1-18, 1-32
1-861-010032-09 . 1-11, 1-25, 1-53, 1-75, 1-85, 1-97, 1-109, 1-166, 1-177, 1-188
1-861-010032-10 . . . . 1-18, 1-32, 1-81, 1-146, 1-177
1-861-010032-11 . . 1-8, 1-14, 1-39, 1-43, 1-51, 1-55, 1-65, 1-69, 1-71, 1-77, 1-81, 1-87, 1-95, 1-99, 1-119, 1-166, 1-172, 1-180, 1-181, 1-183, 1-191, 1-199, 1-208, 1-210, 1-217
1-861-010032-14 . . . . . 1-133, 1-135, 1-137, 1-158
1-861-010032-15 . . . . 1-36, 1-39, 1-65, 1-81, 1-119, 1-133, 1-135, 1-137, 1-139, 1-141, 1-143, 1-146, 1-158, 1-166, 1-172, 1-181, 1-183, 1-197, 1-200, 1-201, 1-207, 1-215, 1-217, 1-223, 1-228
1-861-010032-18 . . . . . 1-137, 1-207
1-861-010032-19 1-133, 1-135, 1-137, 1-139, 1-207, 1-219
1-861-010032-21 . . . . 1-8, 1-22, 1-146, 1-158, 1-200
1-861-010032-25 1-127
1-861-010034-07 1-41, 1-53, 1-67, 1-85, 1-97, 1-119, 1-121, 1-166

Eastern Wrecker Sales Inc

1-861-010034-09 *1-45, 1-49, 1-63, 1-73, 1-75, 1-79, 1-93, 1-105, 1-172*
1-861-010034-10 . . . . . *1-18, 1-32, 1-117*
1-861-010034-13 *1-133, 1-135, 1-146, 1-172, 1-215, 1-221, 1-223, 1-228*
1-861-010034-15 . . . . . *1-207*
1-861-010059-21 . . . . . *1-18, 1-32*
186811 . . . . . *1-173*
186875 . . . . . *1-18, 1-32, 1-129, 1-146, 1-158*
186877 . . . . . *1-18, 1-32, 1-129, 1-146, 1-158*
186882 . . . . . *1-162*
186885 *1-18, 1-32, 1-35, 1-129, 1-146, 1-158, 1-162*
187440 . . . . . *1-203*
187833 . . . . . *1-51, 1-85*
187856 . . . . . *1-41, 1-53, 1-67, 1-85, 1-97*
187857 . . . . . *1-41, 1-53, 1-67, 1-85, 1-97*
187859 . . *1-41, 1-53, 1-67, 1-85, 1-97, 1-121, 1-197*
187860 . . . . . *1-41, 1-53, 1-67, 1-85, 1-97, 1-121*
187863 . . . . *1-11, 1-25, 1-41, 1-53, 1-67, 1-85, 1-97, 1-137*
187864 . . . . . *1-41, 1-53, 1-67, 1-85, 1-97, 1-121*
187868 . . . . . *1-41, 1-53, 1-97*
187869 . . . . . *1-192, 1-194*
189278 . . . . . *1-8, 1-22*
189279 . . . . . *1-8, 1-22*
189280 . . . . . *1-8, 1-22*
189282 . . . . . *1-8, 1-22*
189308 . . . . . *1-173*
189309 . . . . . *1-173*
189310 . . . . . *1-173*
189311 . . . . . *1-173*
189360 . . . . . *1-172*
189360FI *1-172*
189364 . . . . . *1-173*
189369 . . . . . *1-173*
19045 . . . . . *1-149, 1-153*
191568 . . . . . *1-53, 1-67, 1-85, 1-97*
191588 . . . . . *1-111*
191589 . . . . . *1-111*
191847 . . . . . *1-35*
191848 . . . . . *1-35*
191849 . . . . . *1-35*
191850 . . . . . *1-35*
192172 . . . . . *1-146*
193400 . . . . . *1-35*
193401 . . . . . *1-35*
193402 . . . . . *1-35*
193442 . . . . . *1-35*
193443 . . . . . *1-35*
193444 . . . . . *1-35*
193445 . . . . . *1-35*
193446 . . . . . *1-35*
193447 . . . . . *1-35*
193904 . . . . . *1-173*
193910 . . . . . *1-18, 1-32, 1-129, 1-146, 1-158*
194159 . . . . . *1-225*
194363 . . . . . *1-135*
194369 . . . . . *1-135*
194407 . . . . . *1-18, 1-32, 1-162*
194411 . . . . . *1-85, 1-97*
194414 . . . . . *1-122, 1-123*
194415 . . . . . *1-81, 1-89*
194416 . . . . . *1-81*
194417 . . . . . *1-81*
194418 . . . . . *1-81*
194419 . . . . . *1-81*
194425 . . . . . *1-81*
194426 . . . . . *1-81*
194427 . . . . . *1-81*
194843 . . . . . *1-205*
196167 . . . . . *1-5, 1-133, 1-135, 1-137, 1-139*
196168 . . . . . *1-5, 1-133, 1-135, 1-137, 1-139*
196169 . . . . . *1-5, 1-133, 1-135, 1-137, 1-139*
196172 . . . . . *1-5*
196173 . . . . . *1-5*
196177 . . . . . *1-5*
196228 . . . . . *1-22, 1-25, 1-28, 1-32*

Eastern Wrecker Sales Inc

196232 1-133
196233 1-133
196234 1-133
196235 1-133
196236 1-133
196237 1-133
196238 1-133
196239 1-133
196240 1-135
196241 1-135
196242 1-137
196243 1-137
197012 . . . . . 1-95, 1-97, 1-99, 1-101, 1-103, 1-105
197013 1-95
197177 1-51
197460 1-163
197596 . . . . . 1-8, 1-146
197600 . . . . . 1-8, 1-11, 1-14, 1-18
197605 1-32
197610 . . . . . 1-18, 1-32, 1-129, 1-146, 1-158
197612 1-18
197613 1-227
197615 . . . . . 1-18, 1-32
197617 . . . . . 1-18, 1-32
197621 . . . . . 1-22, 1-25, 1-28, 1-32
197632 1-32
198168 . . . . . 1-51, 1-53, 1-55, 1-59, 1-61, 1-63
198169 . . . . . 1-51, 1-53, 1-55, 1-59, 1-61, 1-63
198170 . . . . . 1-51, 1-53, 1-55, 1-59, 1-61, 1-63
198171 . . . . . 1-51, 1-53, 1-55, 1-59, 1-61, 1-63
198172 . . . . . 1-51, 1-53, 1-55, 1-59, 1-61, 1-63
198173 . . . . . 1-51, 1-53, 1-55, 1-59, 1-61, 1-63
198174 . . . . . 1-51, 1-53, 1-55, 1-59, 1-61, 1-63
198175 . . . . . 1-51, 1-53, 1-55, 1-59, 1-61, 1-63
198176 . . . . . 1-51, 1-55, 1-59, 1-61, 1-63
198177 . . . . . 1-55, 1-59, 1-61, 1-63
198178 . . . . . 1-51, 1-53, 1-55, 1-59, 1-61, 1-63
198179 . . . . . 1-51, 1-55, 1-59, 1-61, 1-63
198180 . . . . . 1-51, 1-53, 1-55, 1-59, 1-61, 1-63
198181 . . . . . 1-51, 1-53, 1-55, 1-59, 1-61, 1-63
198215 1-135
198216 1-135
198522 1-69
198544 1-69
198549 . . . . . 1-65, 1-67, 1-69, 1-73, 1-77, 1-79
198550 . . . . . 1-65, 1-67, 1-69, 1-73, 1-77, 1-79
198551 . . . . . 1-65, 1-67, 1-71, 1-75, 1-77, 1-79
198552 . . . . . 1-65, 1-67, 1-73, 1-77, 1-79
198553 . . . . . 1-65, 1-67, 1-69, 1-73, 1-77, 1-79
198554 . . . . . 1-65, 1-67, 1-73, 1-77, 1-79
198633 . . . . . 1-65, 1-67, 1-69, 1-73, 1-77, 1-79
198634 . . . . . 1-65, 1-67, 1-69, 1-73, 1-77, 1-79
198699 . . . . . 1-81, 1-85, 1-87, 1-89, 1-91, 1-93
198700 . . . . . 1-81, 1-85, 1-87, 1-89, 1-91, 1-93
198701 . . . . . 1-81, 1-85, 1-87, 1-89, 1-91, 1-93
198702 . . . . . 1-81, 1-85, 1-87, 1-89, 1-91, 1-93
198703 . . . . . 1-81, 1-85, 1-87, 1-89, 1-91, 1-93
198704 . . . . . 1-81, 1-85, 1-87, 1-89, 1-91, 1-93
198706 . . . . . 1-119, 1-139
198707 1-119
198709 . . . . . 1-119, 1-121, 1-122, 1-123, 1-124
198710 . . . 1-119, 1-121, 1-122, 1-123, 1-124, 1-125
198711 . . . . . 1-119, 1-121, 1-122, 1-123, 1-124
198712 . . . 1-119, 1-121, 1-122, 1-123, 1-124, 1-125
198733 1-127
199000 1-208
199104 . . . . . 1-160, 1-161
199105 1-173
199123 1-137
199124 1-137
199125 1-137
199128 1-139
199129 1-194
199130 1-139
199131 1-192
199132 1-5

Eastern Wrecker Sales Inc

199133 1-133
199134 1-137
199135 1-5
199136 1-5
199140 1-5
199141 1-5
199142 1-5
199211 1-146
199212 1-146
199213 1-146
199214 1-146
199215 1-146
199217 1-158
199218 1-158
199291 1-135
199295 1-135
199704 1-158
199705 1-158
199717 1-197
199718 1-162
199723 1-39
199724 1-39
199726 1-39
199727 1-39
199728 1-39
199729 1-39
199730 1-39
199731 1-39
199755 . . . . . 1-39, 1-41, 1-43, 1-45, 1-47, 1-49
199756 . . . . . 1-39, 1-41, 1-43, 1-45, 1-47, 1-49
199757 . . . . . 1-39, 1-41, 1-43, 1-45, 1-47, 1-49
199758 . . . . . 1-39, 1-41, 1-43, 1-45, 1-47, 1-49
199759 . . . . . 1-39, 1-41, 1-43, 1-45, 1-47, 1-49
199760 . . . . . 1-39, 1-41, 1-43, 1-45, 1-47, 1-49
199761 . . . . . 1-39, 1-41, 1-43, 1-45, 1-47, 1-49
199762 . . . . . 1-39, 1-41, 1-43, 1-45, 1-47, 1-49
199763 . . . . . 1-39, 1-41, 1-43, 1-45, 1-47, 1-49
199942 1-22
199993 1-130
199995 . . . . . 1-127, 1-129
199996 1-127
1DM8ER 1-18, 1-32, 1-129, 1-146, 1-158
200015 . . . . . 1-127, 1-129
200036 . . . . . 1-11, 1-25
200037 . . . . . 1-41, 1-53, 1-67, 1-85, 1-97
201063 . . . . . 1-65, 1-67, 1-69, 1-73, 1-77, 1-79
201064 . . . . . 1-65, 1-67, 1-69, 1-73, 1-77, 1-79
201530 1-22
201642 . . . . . 1-160, 1-161
201643 . . . . . 1-160, 1-161
201644 . . . . . 1-160, 1-161
201645 . . . . . 1-160, 1-161
201650 . . . . . 1-160, 1-161
201974 1-208
201975 1-208
202094 . . . . . 1-47, 1-61, 1-77, 1-91, 1-103
202099 . . . . . 1-47, 1-61, 1-77, 1-91, 1-103
202102 . . . . . 1-47, 1-61, 1-77, 1-103
202103 1-91
202108 1-47
202109 1-47
202111 . . . . . 1-47, 1-61, 1-77, 1-91, 1-103
202112 . . . . . 1-47, 1-61, 1-77, 1-91, 1-103
2021-12-8S 1-175
202113 1-77
202115 1-47
202118 . . . . . 1-47, 1-77
202121 1-77
202123 1-77
202207 1-227
202220 . . . . . 1-51, 1-53, 1-55, 1-59, 1-61, 1-63
202222 . . . . . 1-51, 1-55, 1-59, 1-61, 1-63
2024-12-12S 1-166, 1-172, 1-175, 1-221
2024-12-8S 1-175, 1-221
2024-2-4S 1-18, 1-32, 1-124
202578 . . . . . 1-5, 1-137

Eastern Wrecker Sales Inc

202702-10-8S *1-18, 1-32, 1-129, 1-146, 1-159*
202702-12-12S *1-18, 1-32, 1-175*
202702-12-8S *1-175*
202702-8-8S *1-129*
203102-12-12S *1-147, 1-173*
203725 ..... *1-81, 1-85, 1-87, 1-89, 1-91, 1-93*
204052 ..... *1-51, 1-53, 1-55, 1-59, 1-61, 1-63*
204124 ..... *1-18, 1-32*
204189 ..... *1-35*
2046-6-6S *1-125*
204675 ..... *1-211*
2047-12-12S *1-221*
204958 ..... *1-158*
204959 ..... *1-158*
205836 ..... *1-227*
205837 ..... *1-227*
205873 ..... *1-55, 1-59, 1-61, 1-63*
2062-10-12S *1-166*
2062-10-8S .. *1-18, 1-32, 1-129, 1-146, 1-159, 1-166*
2062-12-12S *1-18, 1-32, 1-172*
2062-16-8S *1-221*
2062-8-8S *1-129*
207109 ..... *1-51, 1-53*
207110 ..... *1-51, 1-55, 1-59, 1-61, 1-63*
2071-8-8S ... *1-18, 1-32, 1-129, 1-146, 1-159, 1-166*
207300 ..... *1-95, 1-97, 1-99, 1-101, 1-103*
207301 ..... *1-95*
207704 ..... *1-95*
207705 ..... *1-95*
208090 ..... *1-51, 1-53, 1-55, 1-59, 1-61, 1-63*
2081-8-6S . *1-43, 1-56, 1-69, 1-71, 1-87, 1-99, 1-122*
2083-12-8S *1-43*
208330 ..... *1-81, 1-85, 1-87, 1-89, 1-91, 1-93*
208335 ..... *1-95, 1-97, 1-99, 1-101, 1-103, 1-105*
208336 ..... *1-95, 1-97, 1-99, 1-101, 1-103, 1-105*
208362 ..... *1-227*
2083-8-4S . *1-45, 1-49, 1-59, 1-63, 1-73, 1-75, 1-79, 1-101, 1-105, 1-130, 1-227*
2083-8-8S *1-43, 1-56, 1-69, 1-71*
208390 ..... *1-35*
208391 ..... *1-35*
208392 ..... *1-35*
2088-6-6S *1-43, 1-56, 1-69, 1-71, 1-87, 1-99*
2089-6-6S *1-122*
2092-6-6S *1-56, 1-87, 1-99*
209563 ..... *1-51, 1-53, 1-55, 1-59, 1-61, 1-63*
210147 ..... *1-227*
210292-12S *1-147*
210377 ..... *1-173*
213295 ... *1-41, 1-53, 1-67, 1-85, 1-97, 1-121, 1-197*
213296 ... *1-41, 1-53, 1-67, 1-85, 1-97, 1-121, 1-197*
213298 ..... *1-41, 1-67, 1-85, 1-97*
2-174-010029 ..... *1-209*
218058 ..... *1-150*
2-181-010001 ..... *1-14, 1-28, 1-32, 1-39, 1-81*
21925 ..... *1-149*
220303 ..... *1-8, 1-22*
220304 ..... *1-8, 1-22*
2216-12-12S *1-212*
2240-12-12S *1-172*
225275 ..... *1-219*
225277 ..... *1-219*
225281 ..... *1-219*
2263 ..... *1-155*
22752 ..... *1-149*
23078 ..... *1-150, 1-154*
23079 ..... *1-150*
23081 ..... *1-150, 1-154*
23083 ..... *1-150*
23085 ..... *1-150*
231-4310 ..... *1-177*
23144 ..... *1-154*
23303 ..... *1-149*
23367 ..... *1-153*
23470 ..... *1-149*
237-2308-012 ..... *1-197*

Eastern Wrecker Sales Inc

239-4899 1-177
239-9076-006 1-119
2481X 1-173
2-573-010037 1-127
2-573-010335 . . . . . 1-5, 1-8
26976 1-153
2-720-010006 . . . . . 1-8, 1-22
2-720-010007 . . . . . 1-8, 1-22
3/4NIPPLE 1-175
3/8CABLE 1-207
3/8P COUPL 1-172
3/8 WR CLAMP 1-207
3-007-010042 1-166
3-014-010023 1-166
3-054-010066 1-166
3-054-010101 1-215
3067 1-117
3-120-010124 1-172
3-120-010445 . . . . . 1-14, 1-81, 1-93, 1-222
3-120-010461 1-221
3-120-010463 1-177
3-128-010032 1-193
3-141-010008 1-215
3-141-010121 1-215
3-141-010123 1-215
3-141-010147 1-215
3-141-010152 1-215
3-141-010155 1-215
3-153-010024040 1-177
3-155-010017-4 1-146
3-155-010018-6 . . . . . 1-146, 1-158
3-156-010042 1-167
3-162-010001 . . . . . 1-167, 1-172, 1-221
3-174-010038 . . . . . 1-146, 1-158
3-174-010039036 . . . . . 1-146, 1-158
3-174-010059 1-158
3-174-010060036 1-158
3-182-010028 1-172
3-182-010034 1-177
3-201-010002 . . 1-51, 1-65, 1-81, 1-95, 1-119, 1-167
3-220-010004 . . . 1-56, 1-59, 1-63, 1-87, 1-89, 1-93, 1-99, 1-101, 1-105, 1-227
3-220-010005 . . . . . 1-122, 1-123, 1-125
3-220-010010 1-167
3-238-010007 . . . . . 1-9, 1-14, 1-22, 1-28
3-272-010010 . . . . . 1-191, 1-199
3-272-010021 . . . . . 1-167, 1-191, 1-199
3-272-010157 1-193
3-273-010014 1-167
3-311-015001 1-143
3-316-010008 . . . . . 1-167, 1-172
3-368-010068 1-167
3-368-010252 . . . . . 1-11, 1-159, 1-167
3-380-010006 1-167
3-384-010020 1-43
3-395-010001 . . . . . 1-119, 1-211
3-399-010001 1-221
3-410-010912 1-166
3-443-010018 1-172
3-481-010006 . . . . . 1-147, 1-155
3-481-010007 . . . . . 1-147, 1-155
3-482-010051 1-167
3-482-010137 1-167
3-482-010503 1-221
3-485-010001 . . 1-39, 1-51, 1-65, 1-81, 1-95, 1-119
3-557-010116 1-200
3-557-010273 1-36
3-557-010380 1-215
3-561-010001 1-221
3-565-010172 1-167
3-565-010173 1-167
3-573-010210 1-5
3-573-010298 1-5
3-573-010299 . . . . . 1-5, 1-146, 1-158
3-573-010377 . . . . . 1-5, 1-119, 1-137
3-573-010496 . . . . . 1-36, 1-119

Eastern Wrecker Sales Inc

3-591-010001 1-221
3-591-010010 1-167
3-619-010065 1-200
3-619-010066 1-200
3-659-010012 1-117
3-681-010056 1-167
3-681-010057 1-167
3-681-010069 1-167
3-707-010001 . . . . . 1-203, 1-209
3-711-010025 1-215
3-720-010010 1-147
3-720-010075 . . . . . 1-9, 1-22
3-755-010080 1-215
3-762-010017 . . . . . 1-39, 1-81, 1-119, 1-217
3-765-010015 1-167
3-780-010002 . . . 1-43, 1-56, 1-59, 1-69, 1-71, 1-99, 1-101, 1-119, 1-122, 1-127, 1-130, 1-227
3-786-010033 1-175
3-786-010037 1-167
3-786-010043 1-221
3-793-010018 1-137
3-793-010040 1-213
3-793-010044 1-137
3-831-010050 1-137
3-846-010041 1-167
3-846-010155 1-175
3-850-010002 1-167
3-870-010106 1-117
3-870-010107 1-117
3-870-010110 1-117
3-870-010116 1-117
3-873-010122 . . . . . 1-147, 1-149
3-873-010123 . . . . . 1-147, 1-153
3-873-010124 1-146
3-873-010126-2 1-146
3-873-010129-2 1-146
40-0667-02 1-172
4009 1-117
43029 . . . . . 1-41, 1-67, 1-85, 1-97, 1-197
5/16-18X1-1/2EB 1-203
5/16-18X2 HHCS 1-167
514-9045-26 1-172
514-9073-18 1-172
516-22PTL 1-22, 1-36, 1-146, 1-158, 1-205
5210 . . . . . 1-9, 1-23
55B61 . . . . . 1-14, 1-28, 1-87, 1-99, 1-130
55B61-6 . . . . . 1-14, 1-28
55B61-7 . . . . . 1-14, 1-28
56D4 1-43, 1-56, 1-69, 1-71, 1-87, 1-99, 1-122, 1-130
61333 1-150
61344 1-154
620-0887 . . . . . 1-18, 1-32, 1-146, 1-159
622-3511-008 . . . . . 1-8, 1-23, 1-39
6-557-010163 1-215
6828 1-221
758-181 . . 1-43, 1-56, 1-69, 1-71, 1-87, 1-99, 1-127, 1-130
7HCGHT500 . . . . . 1-146, 1-158
805-2 . . . . . 1-43, 1-56, 1-69, 1-71, 1-81, 1-99, 1-119
81006 1-149
81009 1-149
81025 1-149
81077 1-153
81078 1-153
81080 1-153
81081 1-153
81264 . . . . . 1-11, 1-25, 1-159, 1-192, 1-194
81530 1-149
88005 1-154
900 23 002 1-113
900-36-177 1-113
900-44-162 . . . . . 1-111, 1-113
900-44-207 1-5
900 54 007 1-45, 1-59, 1-73, 1-75, 1-81, 1-89, 1-101, 1-107
900-54-079 . . . . . 1-109, 1-185

Eastern Wrecker Sales Inc

900-54-082 . . . . . *1-109*
900-54-088 . . . . . *1-59*, *1-89*, *1-101*, *1-109*, *1-185*
900598-12S *1-173*
905-54-107 . *1-14*, *1-28*, *1-45*, *1-49*, *1-59*, *1-63*, *1-73*, *1-75*, *1-79*, *1-89*, *1-93*, *1-101*, *1-105*, *1-107*, *1-130*, *1-159*
934 00 149 . . . . . *1-111*
934-00-492 . . . . . *1-111*
934 00 498 . . . . . *1-111*, *1-113*
936 00 077 . . . . . *1-111*
936 00 162 . . . . . *1-111*, *1-113*

B

B7-141-003 . . . . . *1-215*

C

C3069X12 . . . . . *1-221*
CA-1595 . . . . . *1-166*, *1-175*
CO-975-74-2000 . . . . . *1-200*

H

HM212011 . . . . . *1-117*
HM212049 . . . . . *1-117*
HM218210 . . . . . *1-117*
HM218248 . . . . . *1-117*

K

K71-136-00 . . . . . *1-115*

P

PMCK-22000 . . . . . *1-33*
PTO *1-221*

R

RWD34999 . . . . . *1-39*, *1-51*, *1-65*, *1-82*, *1-95*
RWD39000 . . . . . *1-205*
RWD39021 . . . . . *1-203*, *1-205*

S

STP-164 . . . . . *1-166*

T

TR545D *1-117*
TR573 . . . . . *1-117*

W

W214S-1 . . . . . *1-191*, *1-199*
W908409-4 . . . . . *1-216*

Eastern Wrecker Sales Inc

Eastern Wrecker Sales Inc

Document Control Revision Log:

Date	Form #	Improvement(s): Description and Comments
11/2019	F-845	Updated to Manual Format
2/2020	F-845	Updated parts from ECN 45688

Eastern Wrecker Sales Inc

Equipment from Landoll Corporation is built to exacting standards ensured by ISO 9001 registration at all Landoll manufacturing facilities.

Model Information

Manual Type

Re-Order Part Number F-845-1017

LANDOLL CORPORATION
1900 North Street
Marysville, Kansas 66508
(785) 562-5381
800-428-5655 ~ WWW.LANDOLL.COM

Copyright 2020. Landoll Corporation
"All rights reserved, including the right to reproduce this material or portions thereof in any form."

Eastern Wrecker Sales Inc