Model 855E/855E HD Series
Detachable Semitrailer
Parts Manual

LANDOLL CORPORATION
1900 North Street
Marysville, Kansas 66508
(785) 562-5381
800-428-5655 ~ WWW.LANDOLL.COM

F-917-0220

Eastern Wrecker Sales Inc

Eastern Wrecker Sales Inc

Table of Contents

1 Illustrated Parts List

Instructions For Ordering Parts. 1-1
Decal Placement & Arrangement 1-1

Decals. 1-2
Decal Placement & Arrangement 1-2

Gooseneck Assemblies - 855E 1-6
General Assembly - 855E 1-6
Electrical System - 855E 1-10
Air System - 855E 1-12
Hydraulic & Grease System - 855E 1-16

Gooseneck Assemblies - 855E HD 1-20
General Assembly - 855E HD 1-20
Electrical System - 855E HD 1-24
Air System - 855E HD 1-26
Hydraulic & Grease System - 855E HD 1-30
Hydraulic Cylinder 7 X 34. 1-34
Hydraulic Cylinder 8 X 36. 1-35
Three Spool Valve 1-36

Front Flip Assemblies. 1-38
Front Gooseneck Flip Assembly - 36” 1-38
Front G/N Hydraulic Flip Extension Installation - 855E HD 1-40
Hydraulic Cylinder - 4 X 20. 1-42

Frame Assemblies - 855E. 1-44
General Assembly - 855E 1-44
Electrical System - 855E 1-48
Air Brake System - 855E 1-50
Air Ride Suspension - 855E 1-54
Grease System - 855E. 1-56
Tire Inflation System - 855E. 1-58

Frame Assemblies - 855E HD. 1-60
General Assembly - 855E HD 1-60
Electrical System - 855E HD 1-64
Air Brake System - 855E HD 1-66
Air Ride Suspension - 855E HD. 1-70
Grease System - 855E HD. 1-72
Tire Inflation System - 855E HD. 1-74

Frame Assemblies - 855E Paver 1-78
General Assembly - 855E Paver 1-78
Electrical System - 855E Paver 1-82
Air Brake System - 855E Paver 1-84
Air Ride Suspension - 855E Paver. 1-86
Grease System - 855E Paver. 1-88

Eastern Wrecker Sales Inc.

Tire Inflation System - 855E Paver 1-90

Brake & Air Control Kits 1-92
ABS Brake Kit - Rockwell 1-92
Air Control Kit 1-93
Suspension Hanger - RLU 250 FMT (Front). 1-94
Suspension Hanger RLU- 250-9-4 (Center & Rear) 1-96
Axle and Brake Assembly - Dexter 16-1/2” X 7” 1-98
V 1-100
Ramp Assembly - Front Bi-Fold (855E Paver) 1-101

Ramp Assemblies 1-102
Ramp Assembly - Front Center (855E Paver) 1-103
Power Ramp - 855 1-105
General Assembly 1-111

Flip Assemblies 1-112
Electrical System 1-113
Air Brake System 1-115
Air Ride Suspension 1-117
Grease Assembly 1-119
Tire Inflation System 1-121
Frame & Cylinder Assembly 1-123

Hydraulic Flip Assemblies 1-124
Hydraulic System 1-125
Air System 1-127
Swing Out Installation 1-129

Swingout Installation 1-130
Spreader Assembly - 855E HD. 1-131

Spreader Assembly 1-132
Stinger Assembly - 855E HD 1-133

Stinger Assembly 1-134
Support Boom Assembly - 855E HD 1-135

Support Boom Assembly 1-136
Cover Boom Trough Assembly. 1-137

Cover Assembly 1-138
Cover Boom Trough Assembly - Flip 1-138
Gooseneck Cover Assembly - 855E. 1-139
Gooseneck Cover Assembly - 855E HD. 1-140
Trunnion Cover Installation. 1-141
Wheel Cover Assembly - Used W/ 255 Tires 1-142

Wheel Cover Assembly - Used W/ 275 Tires. 1-143
25 HP Upper Deck Engine Package. 1-145

Engine Assemblies - Option. 1-146
800 Engine Mount Installation 1-151
Front Engine Mount Installation 1-153
Front Engine Mount Cover Installation 1-155
42-11 HP Honda Engine Drive Installation 1-157
Engine Drive Support 1-161
Black Poly Fender Installation - 3 Axle 1-163

Fender Assemblies - Option. 1-164

Eastern Wrecker Sales Inc

Black Poly Fender Installation - Flip Axle 1-164
Chrome Poly Fender Installation - 3 Axle 1-165
Chrome Poly Fender Installation - Flip Axle 1-166
Gooseneck Fender Installation 1-167
Lift Axle Control Assembly - 855E 1-169

Lift Assemblies - Option 1-170
Lift Axle (Flip) Control Assembly 1-171
Rear Suspension Air Lift Assembly 1-173
Backup Alarm/Light Installation 1-175

Light Installations - Options 1-176
Pullout Extension Mounted Light Package 1-177
Strobe Light - 800E Bumper 1-179
Strobe Light - Battery Backup Bumper 1-180
Strobe Light - Flip Axle Installation 1-181
S/T/T Light Installation - 800E 1-183
Web Mounted Four Corner Light Package 1-185
6-1/2’ Front Ramp Assembly - 855E HD 1-187

Misc Options 1-188
1-1/2 X 8 Hydraulic Cylinder - 855E HD 1-189
24/12V Electrical Conversion Box Installation 1-190
Air Weigh Scale Installation 1-191
Auxiliary Mid Electrical Outlet 1-192
Backup Alarm Installation 1-193
Banner Flag Kit Assembly 1-195
Banner Load Assembly 1-196
Bolt-on D-ring Assembly 1-197
Gooseneck Mud Flaps - 855E 1-198
Gooseneck Mud Flap Installation 1-199
Hydraulic Wet Kit 1-201
Lid Assembly - Storage Area Center 1-203
Pressure Gauge Installation 1-204
Rack and Tray Installation - 855E 1-205
Tire Inflation System 1-207

Eastern Wrecker Sales Inc

Eastern Wrecker Sales Inc

Instructions For Ordering Parts

ORDER PARTS FROM LANDOLL PARTS DISTRIBUTION CENTER

**** Repair parts must be ordered through an Authorized Dealer ****

PHONE NO: 1-800-423-4320 OR 1-785-562-5381 **FAX NO: 888-527-3909**
ORDER ONLINE: Dealer.landoll.com

IDENTIFICATION PLATE

The identification plate, which lists the model number and serial number, is located on the front of the frame. **(See Figure 1-1..)**

SERIAL NUMBER NOMENCLATURE

The serial number for Model 855E/855E HD Series Semitrailer is located on the identification plate.

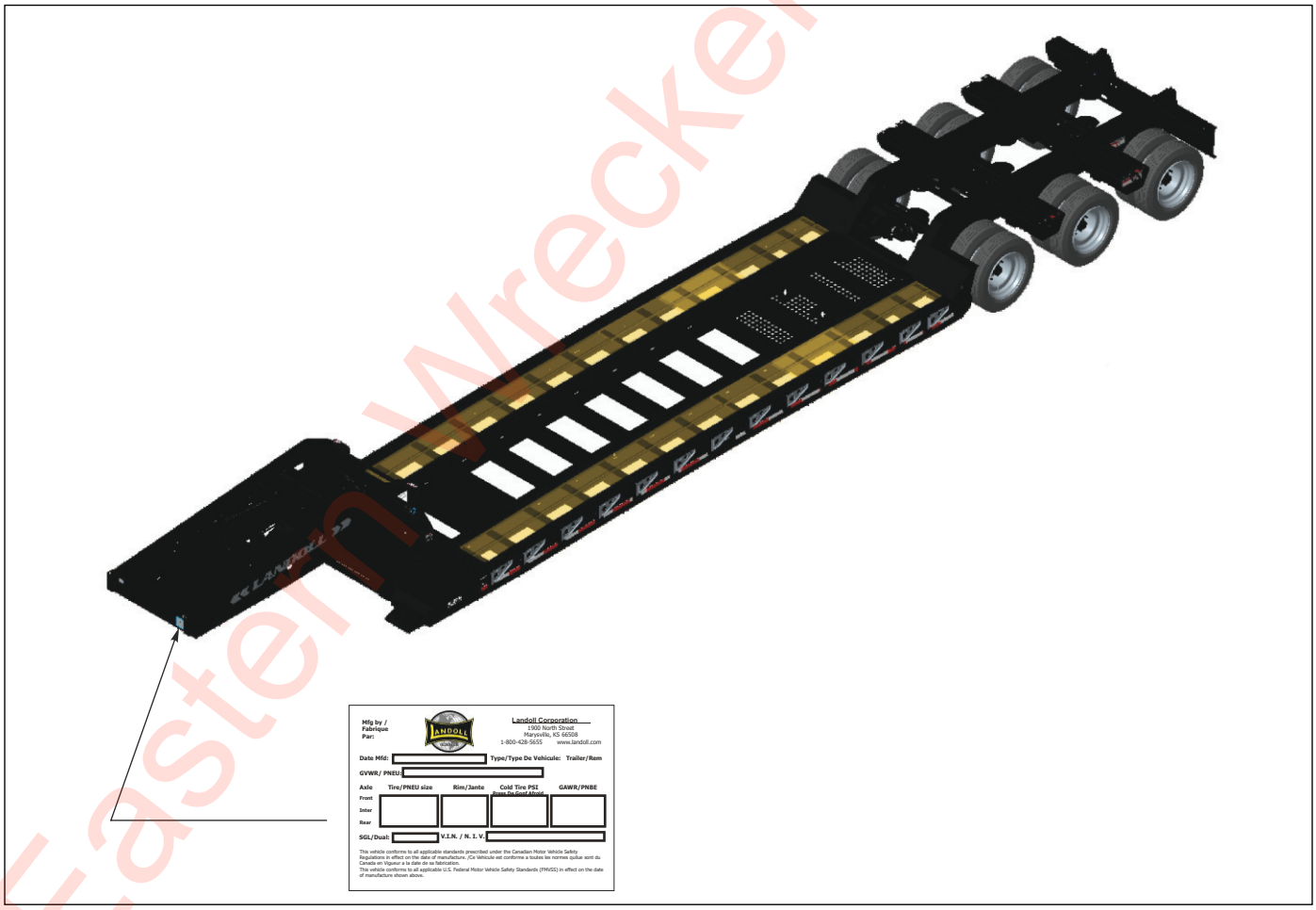

Figure 1-1: Identification Plate and Location

Eastern Wrecker Sales Inc

Decals

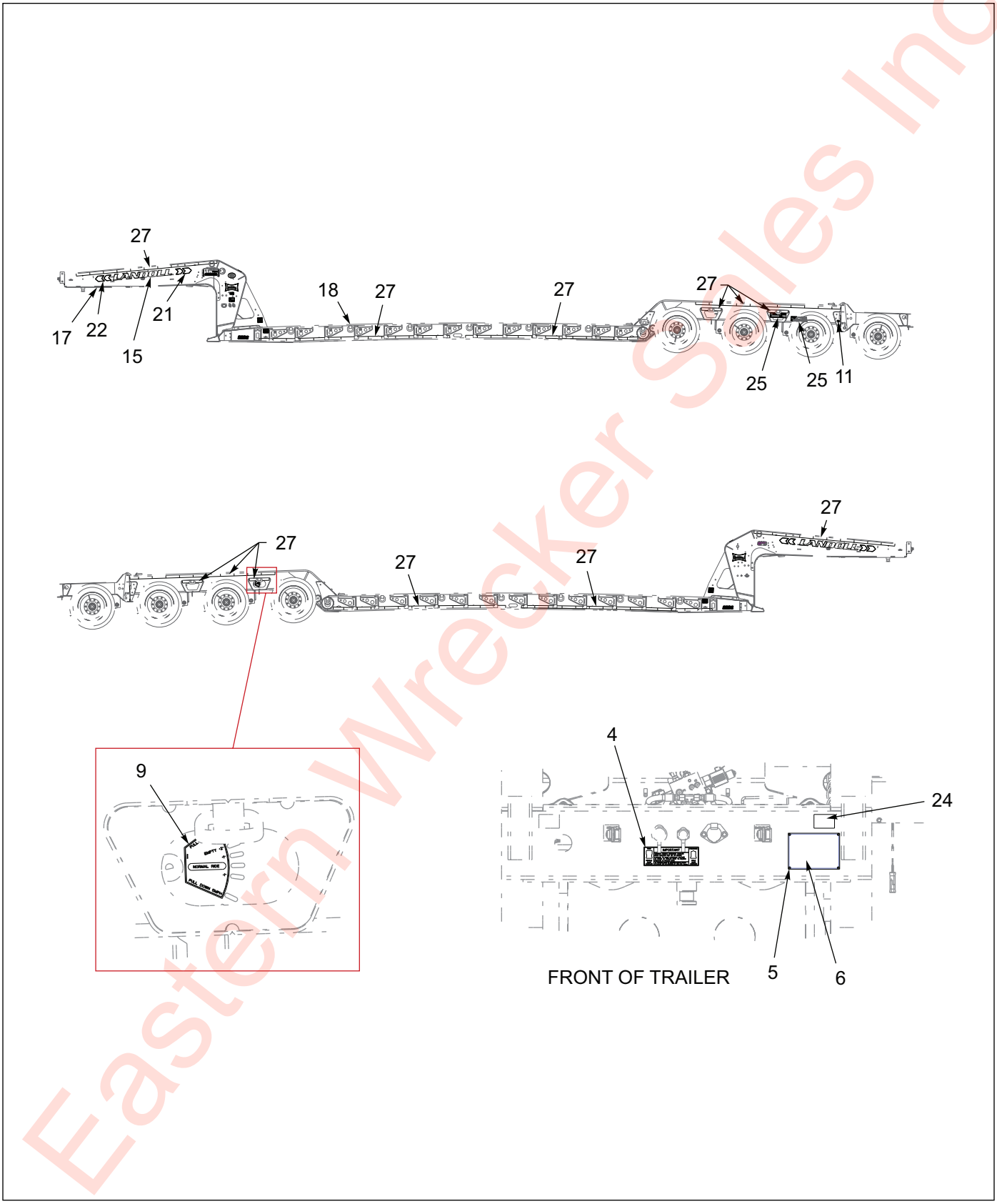

Figure 1-2: Decal Placement (1 of 2)

Eastern Wrecker Sales Inc

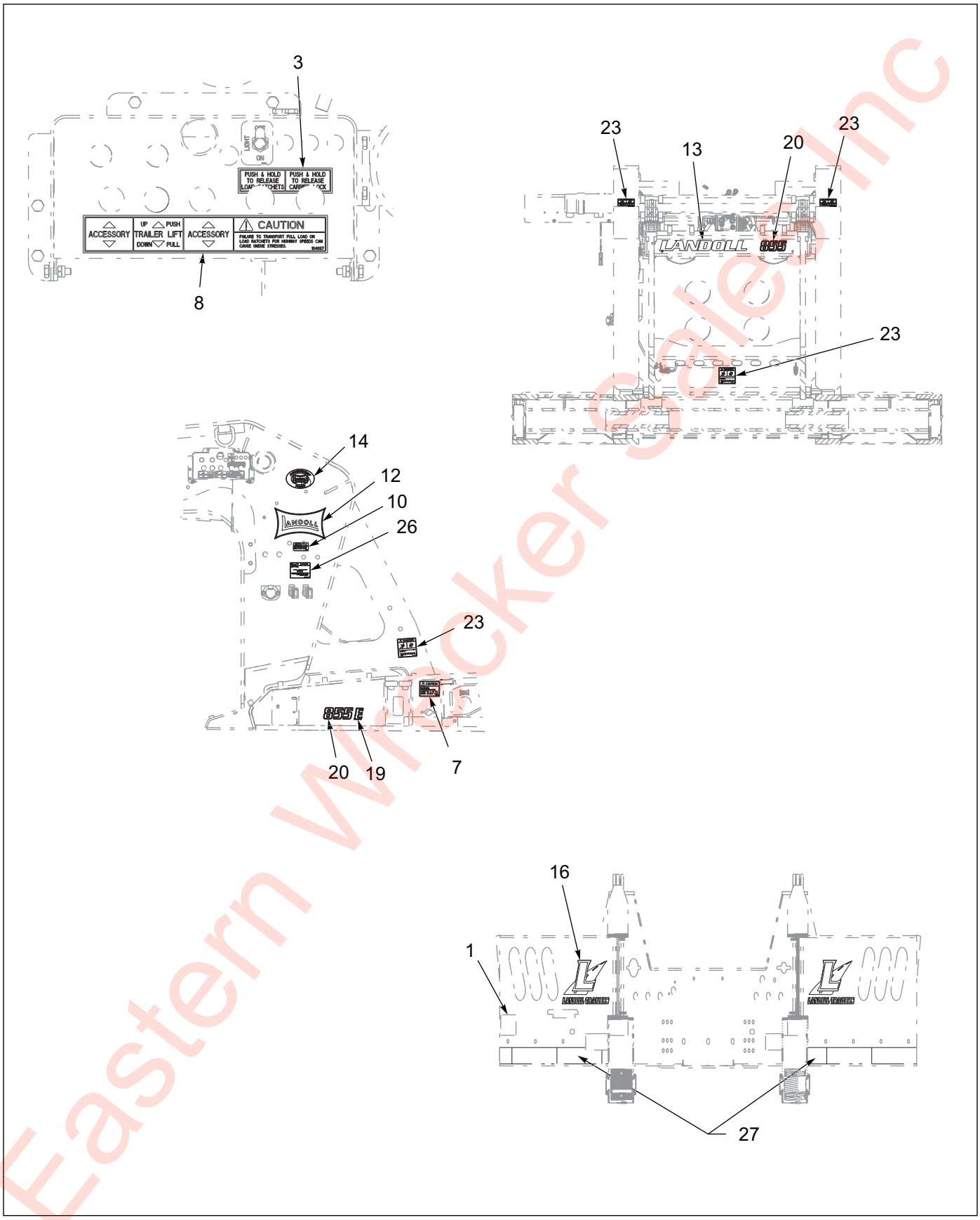

Figure 1-3: Decal Placement (2 of 3)

Eastern Wrecker Sales Inc

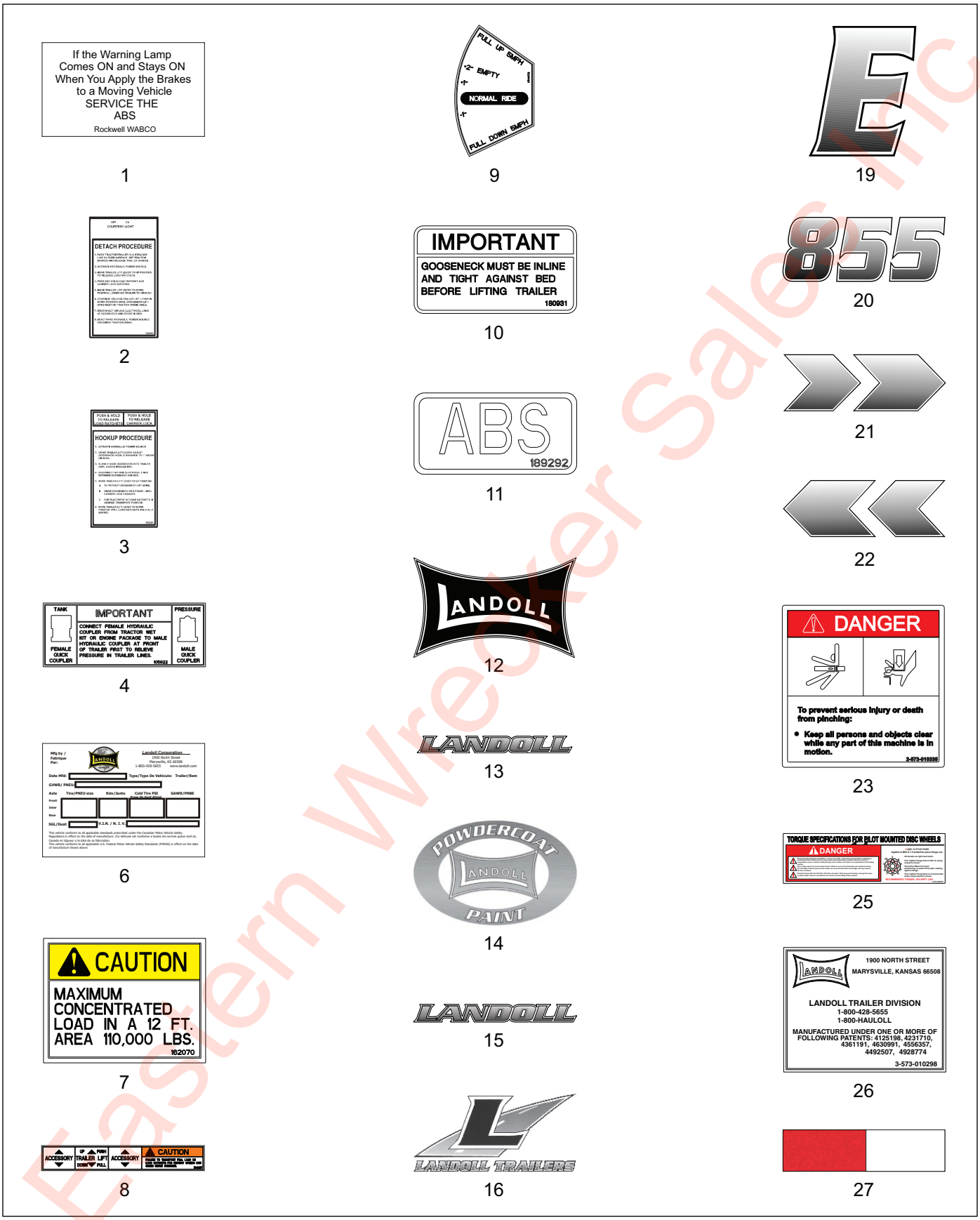

Figure 1-4: Decals Placement (3 of 3)

Eastern Wrecker Sales Inc

Decal Placement & Arrangement

ITEM	PART NO.	DESCRIPTION	QTY.	
	199719	DECAL INSTL, 855E	*	
	208712	DECAL INSTL, 855E G/N		*
1	101855	WARNING LAMP LABEL,ABS	1	--
2	105282	DECAL 825 DETACH PROCEDURE	--	1
3	105283	DECAL 825 HOOKUP PROCEDURE	--	1
4	105822	DECAL, HYD COUPLER	--	1
5	12420301-017	RIVET,BLIND .156 X 1/4 GRIP	--	4
6	155780	TRAILER VIN PLATE B	--	1
7	162070	DECAL CAUT 110K/12FT CON LOAD	2	--
8	164897	DECAL 855 CONTROLS	--	1
9	174042	DECAL, RIDE RAISE/LOWER	1	--
10	180931	DECAL, 800 G/N CONNECTION	--	1
11	189292	DECAL, ABS, WHITE	1	--
12	192208	DECAL BOWTIE 6-3/4 X 11	--	2
13	196167	DECAL LANDOLL SMALL	--	1
14	196173	DECAL POWDERCOAT SMALL	--	1
15	196174	DECAL LANDOLL LARGE	--	2
16	196177	DECAL HIGHWAY L LARGE	2	--
17	-----	GOOSNECK ASSY 855E	REF	REF
18	198153	FRAME WLDMT 855E-26	REF	REF
19	199135	DECAL, E 2-1/2	2	--
20	199177	DECAL 855 TRAILER	2	1
21	199720	DECAL ARROW LARGE 2RH	--	2
22	199721	DECAL ARROW LARGE 2LH	--	2
23	2-573-010335	DECAL, DANGER PINCHING	--	5
24	202578	REFLEXITE WHITE 3" LENGTH	--	2
25	3-573-010210	DECAL TORQUE SPEC 8-10STU HUB	1	--
26	3-573-010298	DECAL, PATENT	--	1
27	3-573-010377	DECAL, 2"REFLEXITE TAPE,RD/WHT	778	228

Eastern Walker Sales Inc

Gooseneck Assemblies - 855E

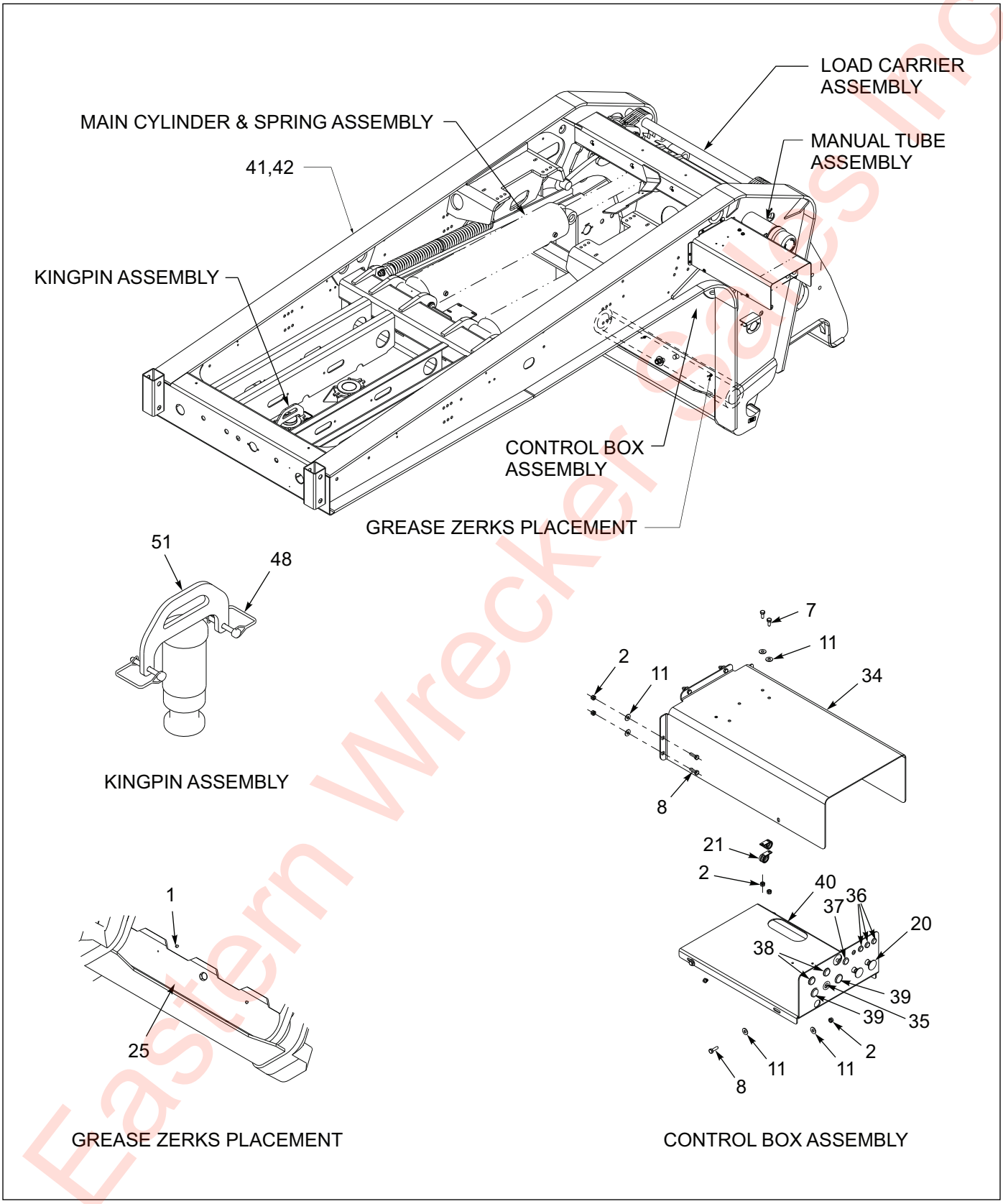

Figure 1-5: General Assembly - 855E (1 of 2)

Eastern Wrecker Sales Inc

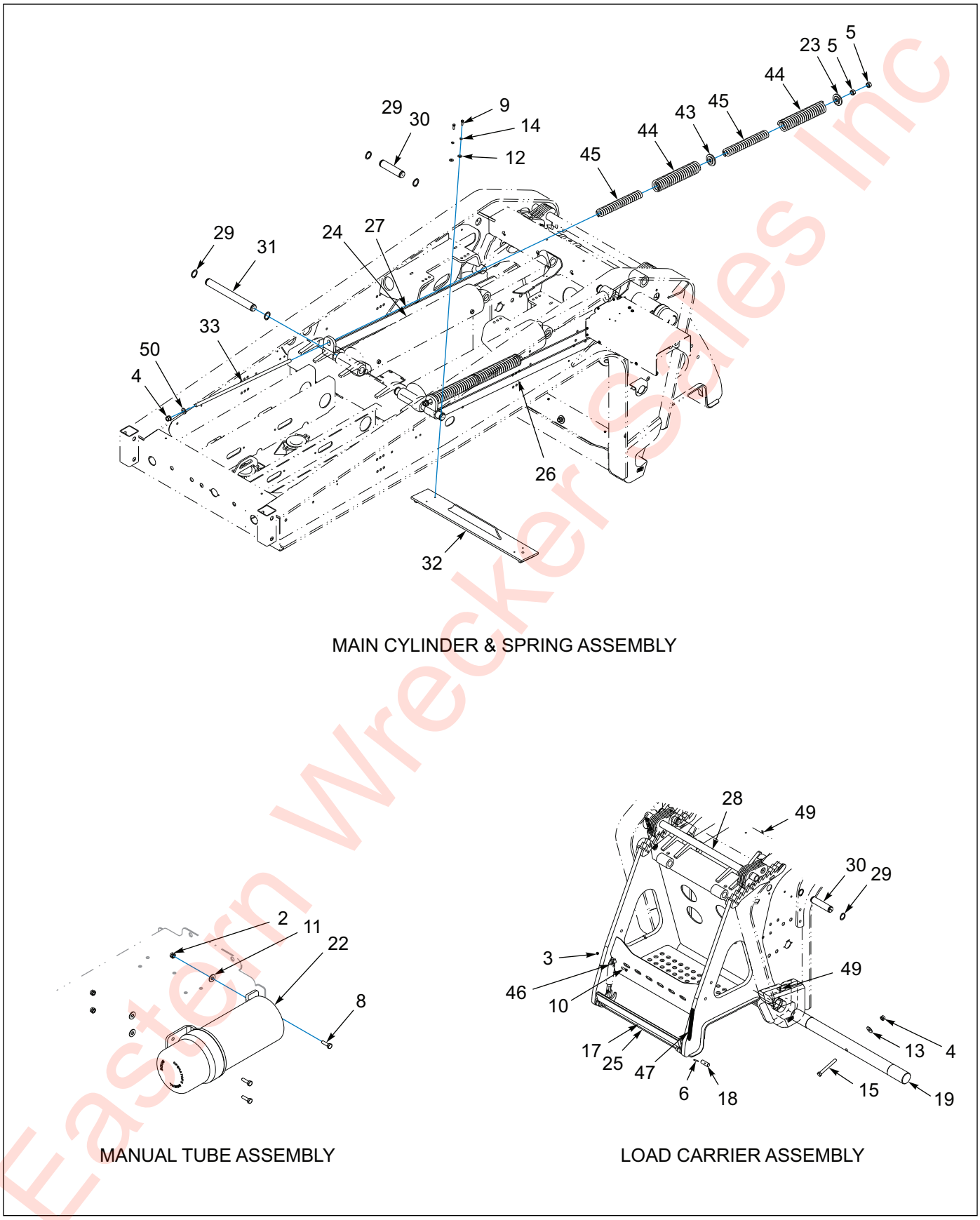

Figure 1-6: General Assembly - 855E (2 of 2)

Eastern Wrecker Sales Inc

General Assembly - 855E

ITEM	PART NO.	DESCRIPTION	QTY.
	197670	GOOSENECK ASSY 855E 12'5"	
	197671	GALV ASSY OF 197671 855E G/N	
1	1-298-010001-1	ZERK FITTING 1/4 SAE	2
2	1-512-010005-01	NUT,HEX,SLFLKG GRB 1/4-20	14
3	1-512-010005-05	NUT, HEX, SLFLKG GRB 3/8-16	2
4	1-512-010005-15	NUT,HEX,SLFLKG GRB 3/4-10	3
5	1-512-010007-12	NUT, HEX 3/4-10 GR2 ZP	4
6	1-647-010004221	PIN,SPRING 1/4X2 SLOTTED	2
7	1-654-010047-03	SCREW, HEX 1/4-20UNCX5/8	2
8	1-654-010047-05	SCREW, HX CP 1/4-20UNCx7/8 GR5	12
9	1-654-010051-05	SCREW,HEX CAP 3/8-16UNCX1 GR5	4
10	1-654-010051-08	SCREW,HEX CAP,3/8-16X1-3/4 G	2
11	1-861-010032-07	WASHER,FLAT 1/4 ZP	18
12	1-861-010032-11	WASHER, FLAT 3/8 W ZP/CD	4
13	1-861-010032-21	WASHER, FLAT 3/4 W ZP/CD	1
14	1-861-010034-11	WASHER, LKG HLCL SPR, 3/8	4
15	100855	SCREW, HHCS,3/4-10X6-1/2 GR5	1
16	101299	KEY CHAIN, LANDOLL **(NOT SHOWN)**	1
17	105237	LATCH WLDMT G/N LOWER	1
18	105243	PIN,LOWER G/N LATCH 825	2
19	105245	PIN, G/N TO CARRIER 825	1
20	107887	VALVE AIR PUSH BUTTON	REF
21	125894	CLAMP, CABLE 5/8 SST	2
22	150076	MANUAL TUBE 4-1/4"ID	1
23	156430	SPRING CAP WLDMT	2
24	160366	CYL HYD 7 X 34 O-RING **(SEE PAGE 1-34)**	REF
25	160396	CARRIER WLDMT 855	1
26	161165	CHANNEL WLDMT LH,LIFT G/N 855	1
27	161168	CHANNEL WLDMT RH,LIFT G/N 855	1
28	161172	LATCH WLDMT G/N UPPER 855	1
29	162037	RING, 1.75 RETAINING HD	12
30	162038	PIN 1-3/4 X 7-1/2 ZP	4
31	162039	PIN 1-3/4 X 16-1/2 ZP	2
32	162056	BAR WLDMT LIFT-ARM 855	1
33	162788	SPRING ROD 855 G/N LIFTARM	2
34	220303	PLATE, TOP CONTROL BOX, BLACK	1
35	178444	BUSHING NYLON INSERT 9/16ID	1
36	189278	PLUG, PLASTIC PANEL 1/2 & 9/16	3
37	189279	PLUG, PLASTIC PANEL 5/8	1
38	189280	PLUG, PLASTIC PANEL 3/4	2
39	189282	PLUG, PLASTIC PANEL 7/8	2
40	220304	PLATE, BASE, CONTROL BOX, BLACK	1
41	197661	GOOSENECK WLDMT 855E-12'5" **(USED W/ 197670)**	1
42	197669	GALV OF 197661 855E 12'-5" GN **(USED W/ 197671)**	1
43	199942	SPRING CAP WLDMT 2 SIDES	2
44	2-720-010006	SPRING COULTER OUTER	4
45	2-720-010007	SPRING COULTER INNER	4
46	3-238-010007	CYLINDER AIR 1-3/4 BORE	REF
47	3-720-010075	SPRING EXTENSION 7/8X6	1

Eastern Wacker Sales Inc

General Assembly - 855E

ITEM	PART NO.	DESCRIPTION	QTY.
48	516-22PTL	RETAINING PIN MUD FLAP	2
49	5210	ZERK FITTING 1/4-28X45 SAE	4
50	622-3511-008	WASHER, FLAT 3/4 MIL-CARB SAE	2
51	169372	KINGPIN WLDMENT DROP-IN 2”	1

Eastern Wrecker Sales Inc

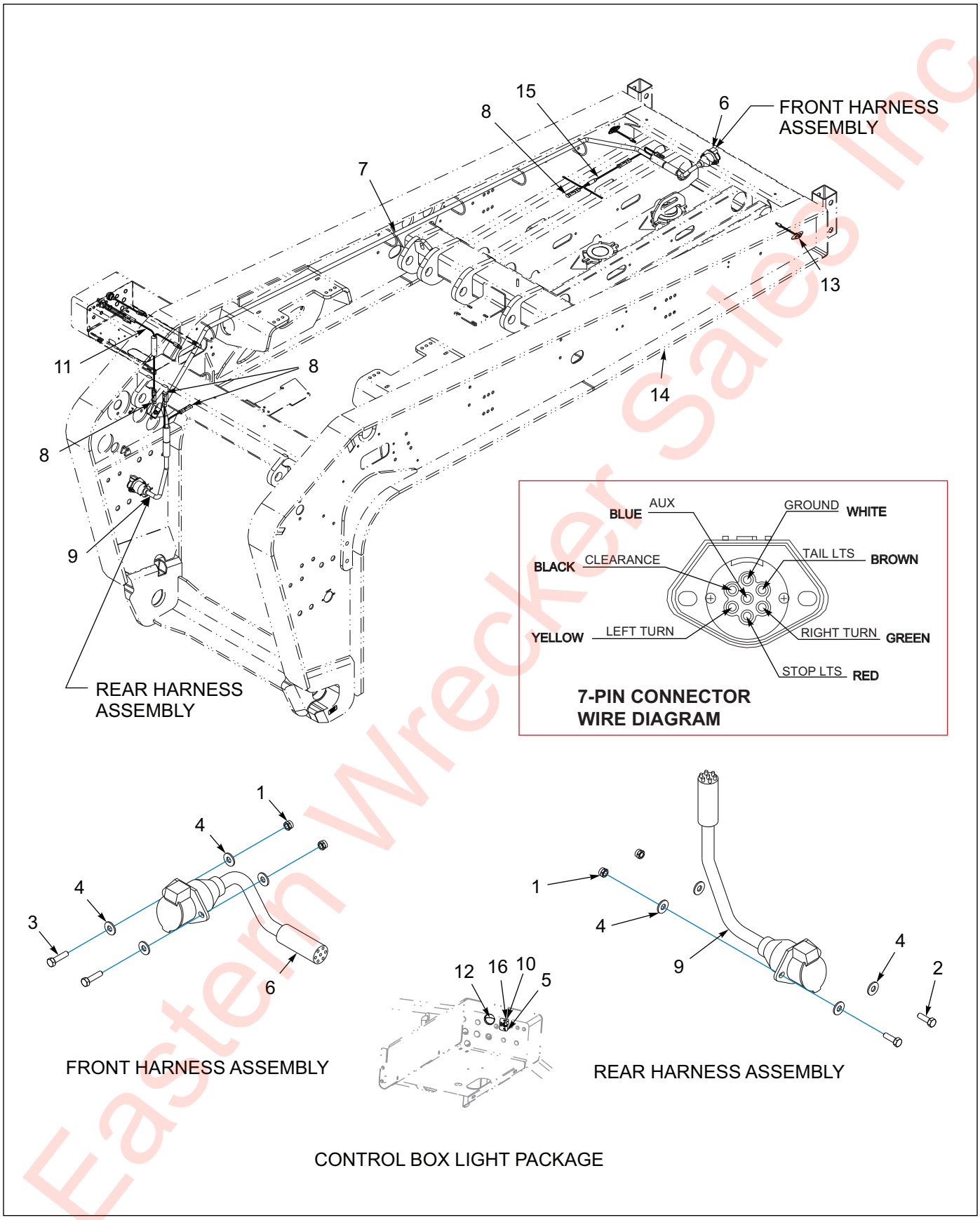

Figure 1-7: Electrical System - 855E

Eastern Wrecker Sales Inc

Electrical System - 855E

ITEM	PART NO.	DESCRIPTION	QTY.
	197670	GOOSENECK ASSY 855E 12'5"	
	197671	GALV ASSY OF 197671 855E G/N	
1	1-512-010005-03	NUT HEX SLFLKG GRB 5/16-18	4
2	1-654-010049-05	SCREW HX CP 5/16-18UNCX1 GR5	2
3	1-654-010049-06	SCREW,H/CAP,5/16-18UNCX1-1/4	2
4	1-861-010032-09	WASHER, FLAT 5/16 W ZP/CD	8
5	130116	DECAL, ON/OFF LIGHT	1
6	143100	HARNESS 7WAY RECP GROTE	1
7	143101	HARNESS FRONT MAIN GROTE	1
8	143121	DUMMY PLUG MALE/FEM BULLET	1
9	146897	HARNESS 7WAY RECP REAR GROTE	1
10	150117	SWITCH ASSY LIGHT GROTE	1
11	169853	HARNESS T PWR BRANCH	1
12	185059	LIGHT,LED COURTESY, GROTE	1
13	187863	LIGHT YEL LED.75CL/MK CLEAR CB	2
14	197661	GOOSENECK WLDMT 855E-12'5"	REF
15	200036	HARNESS MARKER LFT SMALL END	1
16	81264	RUBBER BOOT FOR ELECT SWITCH	1

Eastern Wrecker Sales Inc

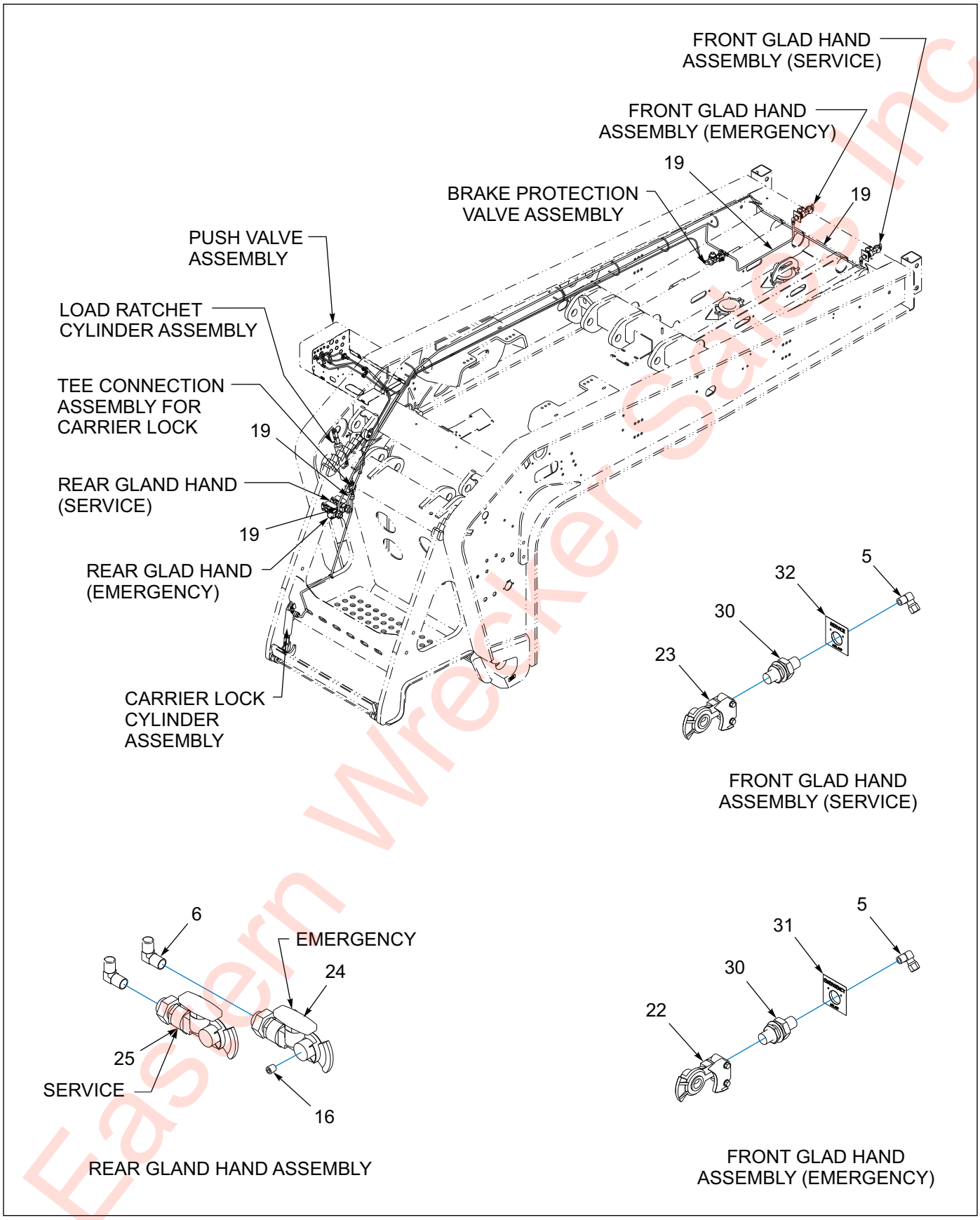

Figure 1-8: Air System - 855E (1 of 2)

Eastern Wrecker Sales Inc

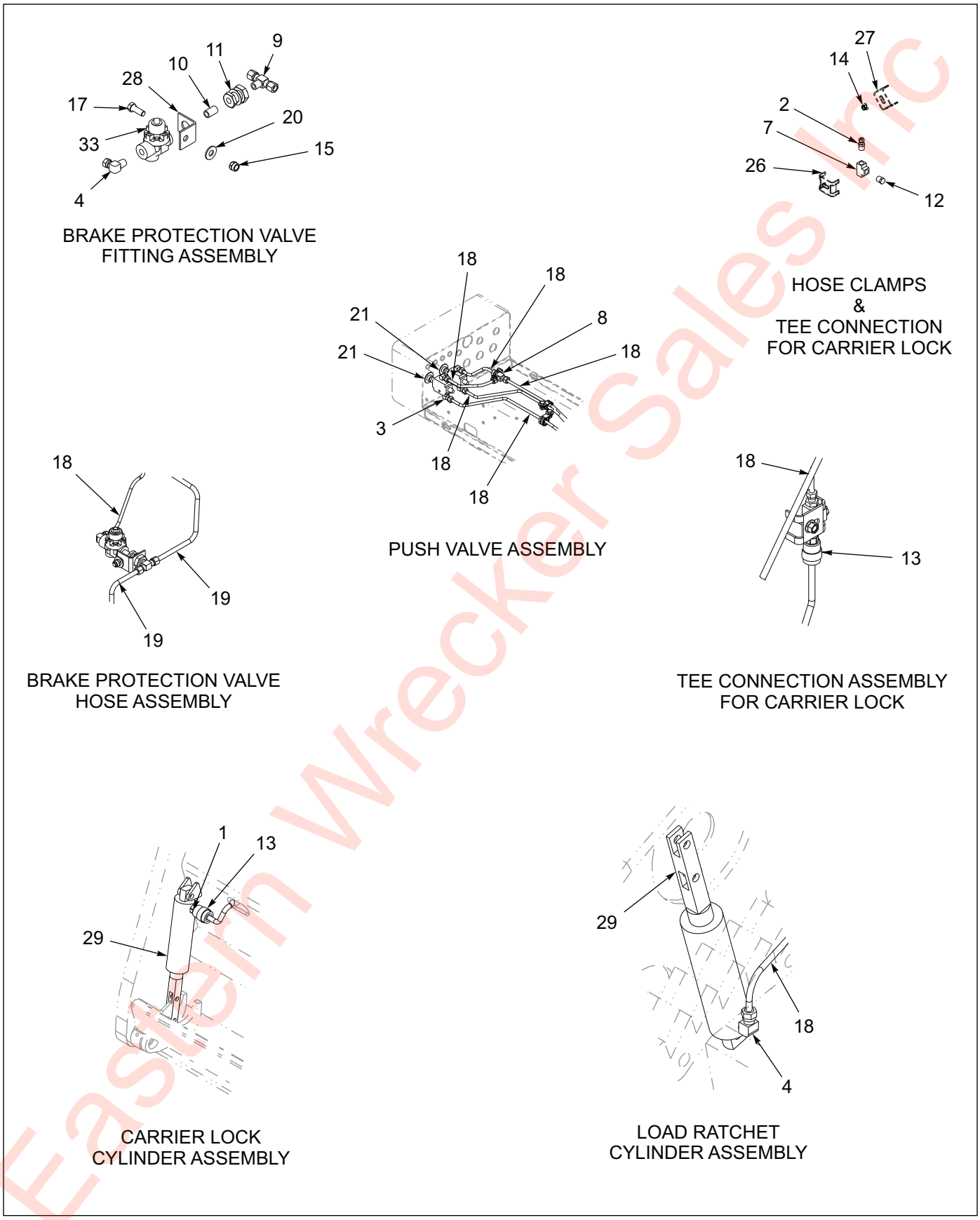

Figure 1-9: Air System - 855E (2 of 2)

Eastern Wrecker Sales Inc

Air System - 855E

ITEM	PART NO.	DESCRIPTION	QTY.
	197670	GOOSENECK ASSY 855E 12'5"	
	197671	GALV ASSY OF 197671 855E G/N	
1	1-297-010004-04	FITTING, BRASS PIPE ADAPTER	1
2	1-297-010007-06	FITTING, AIR	1
3	1-297-010008-05	FITTING, AIR 90	4
4	1-297-010008-07	FITTING, AIR 90	2
5	1-297-010008-18	FITTING, AIR 90	2
6	1-297-010008-20	FITTING, AIR 90	2
7	1-297-010009-03	FITTING, AIR PIPE TEE	1
8	1-297-010010-01	FITTING AIR, UNION TEE 1/4	1
9	1-297-010015-06	FITTING, AIR, BRASS TEE	1
10	1-297-010020-02	FITTING, AIR ANCHOR CL NIP	1
11	1-297-010022-02	FITTING, AIR ANCHOR COUPLING	1
12	1-297-010033-03	FITTING, BRASS PLUG HEX	1
13	1-384-010038060	HOSE, AIR 3/8 X 60	1
14	1-510-010001	NUT, FLANGED 3/8-16	2
15	1-512-010005-05	NUT, HEX LOCK 3/8-16 GRB	1
16	1-560-010002-02	PLUG, PIPE 1/4	1
17	1-654-010051-05	SCREW, HEX HEAD CAP 3/8-16 X 1 GR5	1
18	1-833-010001	TUBING, NYLON 1/4	11
19	1-833-010002	TUBING, NYLON 3/8	30
20	1-861-010032-11	WASHER, FLAT 3/8W	1
21	107887	VALVE, AIR PUSH BUTTON	2
22	108801	GLAD HAND, RED AIR	1
23	108802	GLAD HAND, BLUE AIR	1
24	117838	GLAD HAND W/ SHUTOFF EMERGENCY	1
25	117839	GLAD HAND W/ SHUTOFF SERVICE	1
26	138814	HOSE CLAMP, NOTCHED	1
27	2-181-010001	CLAMP	1
28	3-120-010445	BRACKET, PRESSURE REGULATOR	1
29	3-238-010007	CYLINDER, AIR 1-3/4 BORE	2
30	55B61	FRAME UNION	2
31	55B61-6	TAG EMERGENCY LINE	1
32	55B61-7	TAG SERVICE LINE	1
33	905-54-107	BRAKE PROTECTION VALVE	1

Eastern Wrecker Sales Inc

Table provided for general use.

NOTES:

Eastern Wrecker Sales Inc

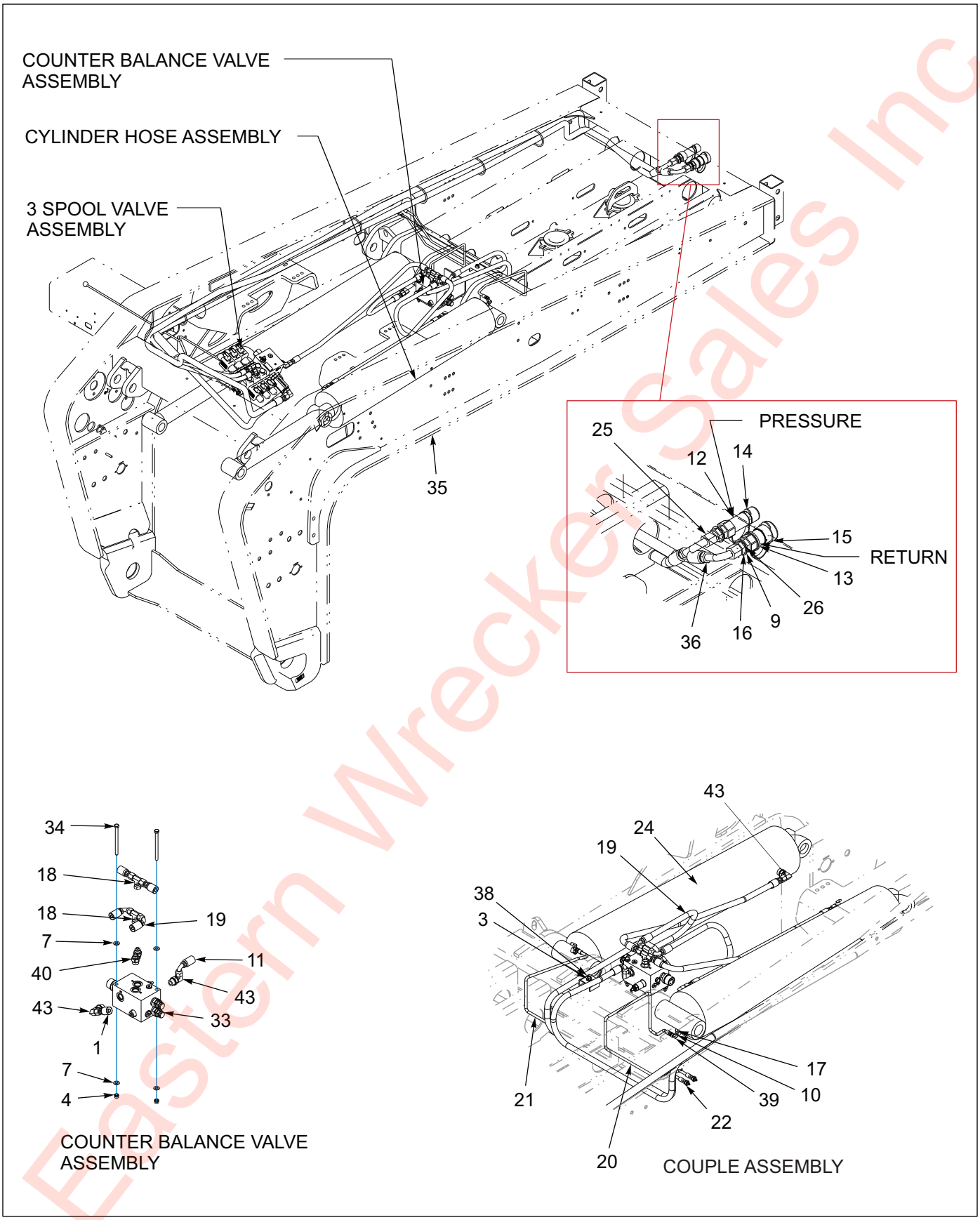

Figure 1-10: Hydraulic & Grease System - 855E (1 of 2)

Eastern Wrecker Sales Inc

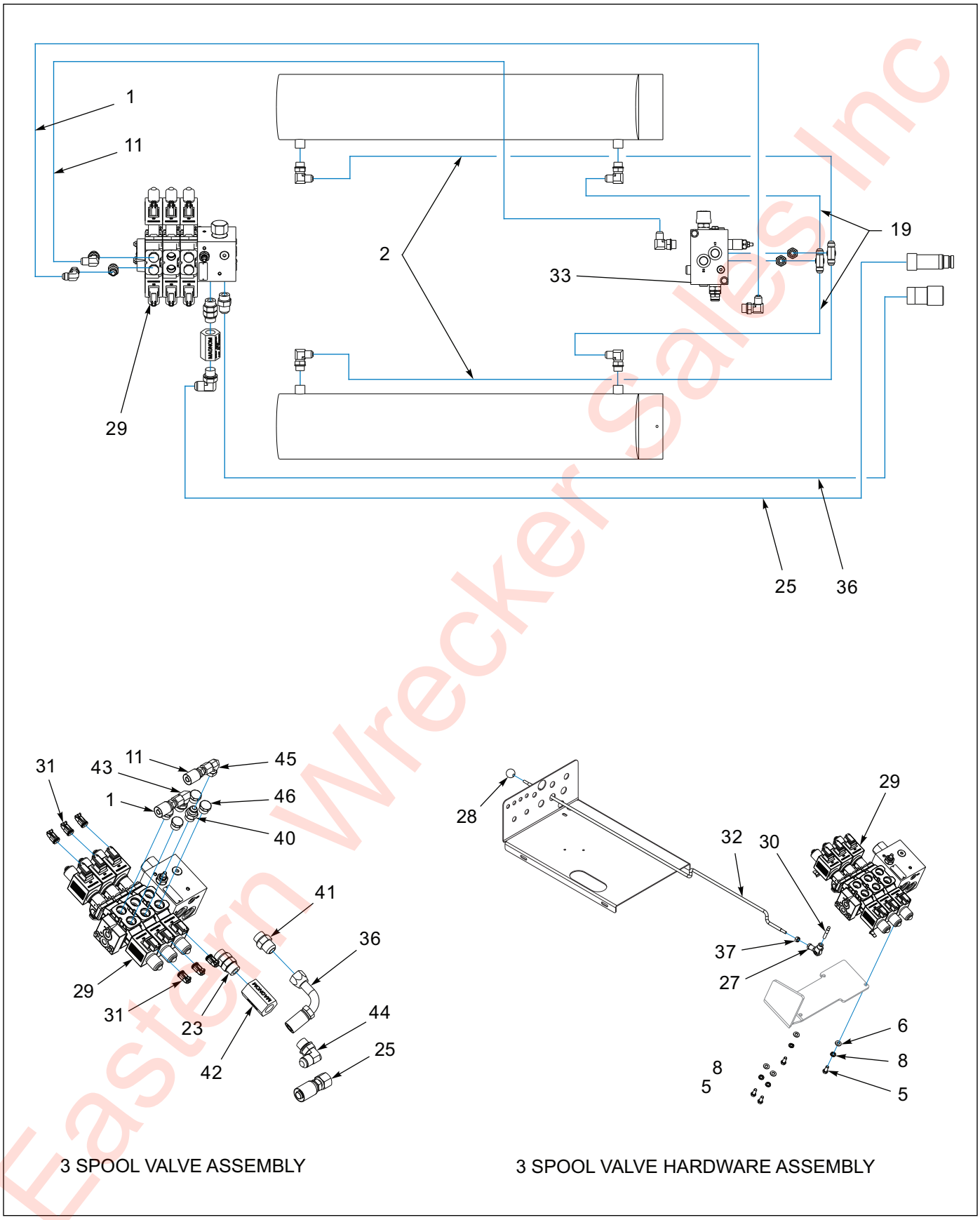

Figure 1-11: Hydraulic & Grease System - 855E (2 of 2)

Eastern Wrecker Sales Inc

Hydraulic & Grease System - 855E

ITEM	PART NO.	DESCRIPTION	QTY.
	197670	GOOSENECK ASSY 855E 12'5"	
1	1-397-010301136	HOSE ASSY,1/2X136 SAE 37 STR	1
2	1-397-010302060	HOSE ASSY1/2X60,SAE37,STR-90	2
3	1-510-010001	NUT, 3/8-16 UNC FLANGE LOCK	1
4	1-512-010005-05	NUT, HEX, SLFLKG GRB 3/8-16	2
5	1-654-010049-03	SCREW HX CP 5/16-18UNCX3/4GR5	4
6	1-861-010032-08	WASHER,FLAT 5/16 N ZP	4
7	1-861-010032-10	WASHER, FLAT 3/8" N ZP/CD	4
8	1-861-010034-10	WASHER,LKG 5/16	4
9	1-861-010059-21	WASHER,LKG,INTL TOOTH 1-1/8	2
10	101528	ELBOW,BRASS PIPE STREET	2
11	104370	HOSE ASSY 1/2X126,SAE37,STR90	1
12	105479	COUPLER FLAT FACE MALE NOSE	1
13	105480	COUPLER FLAT FACE FEMALE BODY	1
14	105481	COUPLER DUST CAP MALE	1
15	105482	COUPLER DUST CAP FEMALE	1
16	105483	ADAPTER BLKHD 12JIC-12 ORING	2
17	121355	ELBOW ST 45DEG 1/4-28X1/8PTF	2
18	123109	ADAPTER, TEE, #8JIC FEM BR	2
19	125871	HOSE ASSY 1/2X21 SAE37 STR-90	2
20	142441	HOSE ASSY,GREASE 1/4X45	1
21	142465	HOSE ASSY GREASE 1/4X67	1
22	142545	NUT 7/16 FOR BULKHEAD	2
23	158581	ADAPTER STR #12 ORB - #12 ORB	1
24	160366	CYLINDER, HYDRAULIC 7 X 34 **(SEE PAGE 1-34)**	2
25	163352	HOSE ASSY,3/4X180,SAE37,STR90	1
26	169365	SPACER HYDR COUPLERS	2
27	186875	CLEVIS JOINT,ROD ENDS M8.1.25	1
28	186877	KNOB BLACK 1" ROUND M8X1.25THD	REF
29	186885	VALVE, 3 SP, 35 GPM, SOLENOID **(SEE PAGE 1-36)**	1
30	193910	STUD M8-1.25X50MM DBLE THD	1
31	194407	PLUG ASSY DUMMY DEUTSCH 2 PIN	6
32	197610	ROD HANDLE M8X1.25 ENDS LONG	1
33	197615	VALVE REGEN DUAL COUNTERBALANC	1
34	197617	SCREW,HEX CAP,3/8-16UNC, 4-3/4	2
35	197661	GOOSENECK WLDMT 855E-12'5"	REF
36	197668	HOSE ASSY 3/4X172#12JIC 90-90L	1
37	1DM8ER	NUT HEX HD M8X1.25 CL8.8	1
38	2-181-010001	HOSE CLAMP	1
39	2024-2-4S	ADAPTER, ELBOW	2
40	202702-10-8S	ADAPTER, #10 O-RING #8 TUBE	3
41	202702-12-12S	ADAPTER,#12 O-RING X #12 TUBE	1
42	204124	FILTER HYD IN-LINE MAGNETIC	1
43	2062-10-8S	ADAPTER,90, #10 O-RING-TUBE	7
44	2062-12-12S	ADAPTER,90,#12 O-RINGX#12TUBE	1
45	2071-8-8S	ADAPTER90 #8 FLR SWIVEL #8JIC	1
46	620-0887	FTG,PLUG #10 MALE O-RING BOSS	4

Eastern Wheel Sales Inc

Table provided for general use.

NOTES:

Eastern Wrecker Sales Inc

Gooseneck Assemblies - 855E HD

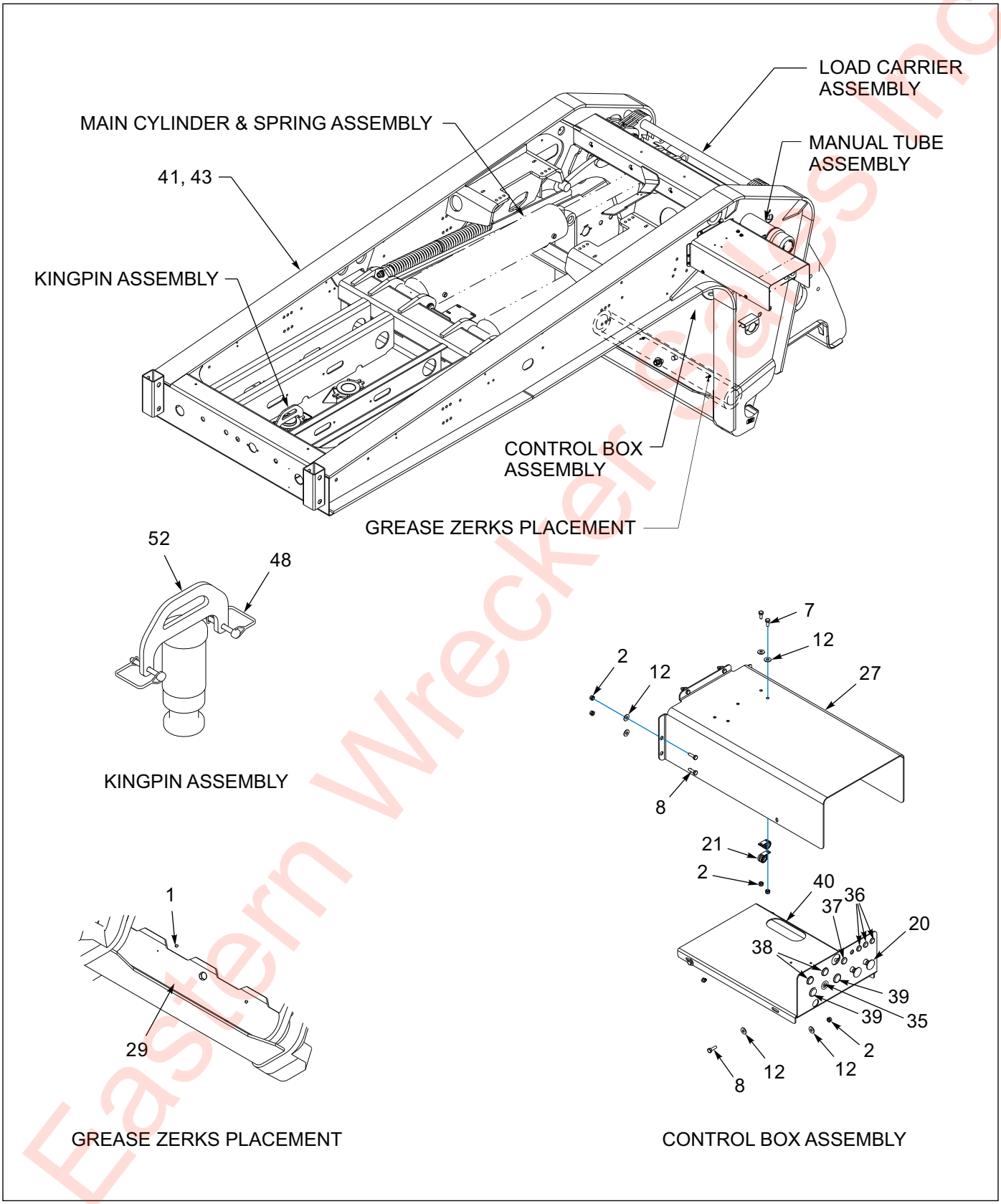

Figure 1-12: General Assembly - 855E HD (1 of 2)

Eastern Wrecker Sales Inc

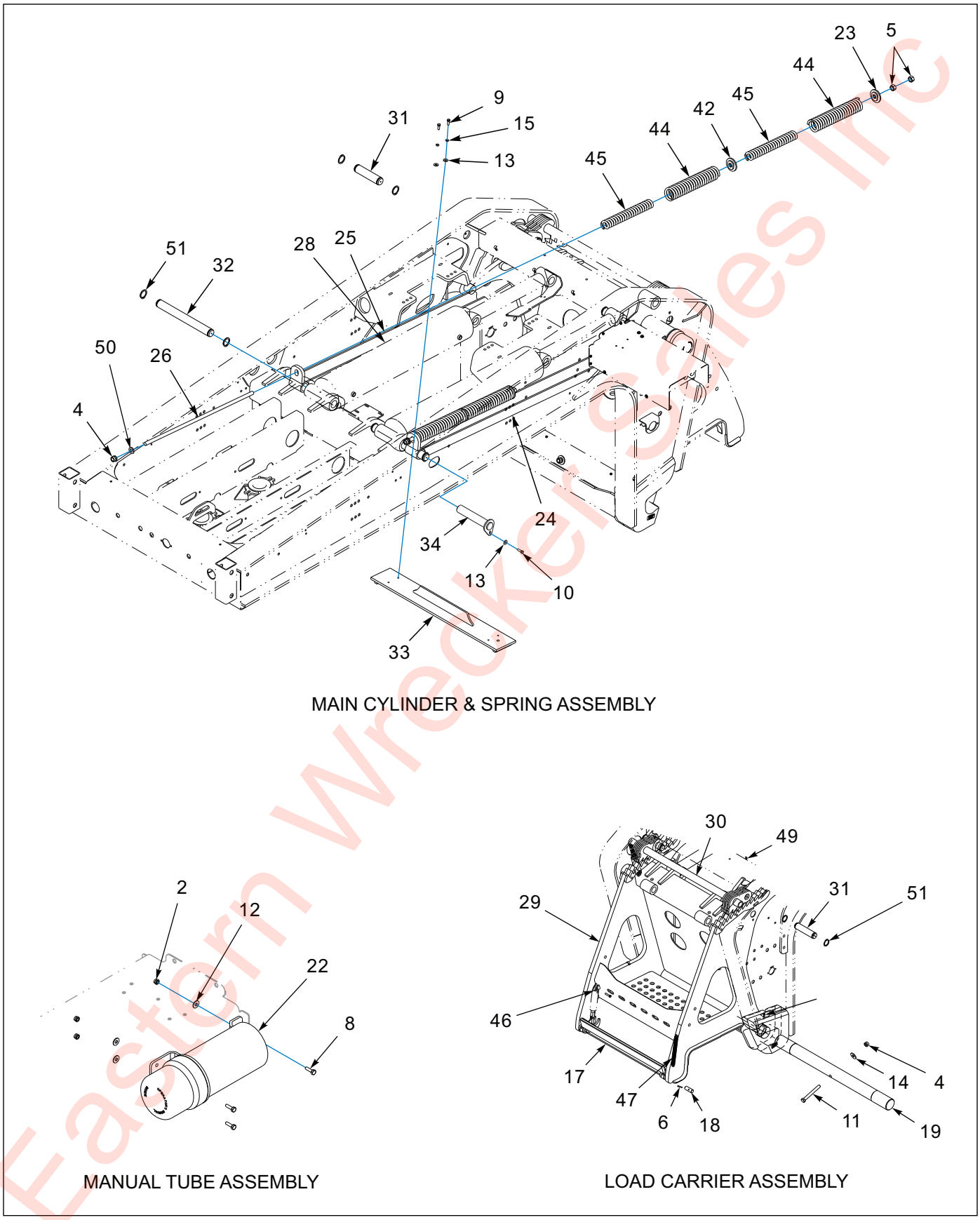

Figure 1-13: General Assembly - 855E HD (2 of 2)

Eastern Wrecker Sales Inc

General Assembly - 855E HD

ITEM	PART NO.	DESCRIPTION	QTY.
	199980	GOOSENECK ASSY 855E-HD	
	199935	GALV OF 199980 855E-HD	
1	1-298-010001-1	ZERK FITTING 1/4 SAE	2
2	1-512-010005-01	NUT,HEX,SLFLKG GRB 1/4-20	14
3	1-512-010005-05	NUT, HEX, SLFLKG GRB 3/8-16	2
4	1-512-010005-15	NUT,HEX,SLFLKG GRB 3/4-10	3
5	1-512-010007-12	NUT, HEX 3/4-10 GR2 ZP	4
6	1-647-010004221	PIN,SPRING 1/4X2 SLOTTED	2
7	1-654-010047-03	SCREW, HEX 1/4-20UNCX5/8	2
8	1-654-010047-05	SCREW, HX CP 1/4-20UNCx7/8 GR5	12
9	1-654-010051-05	SCREW,HEX CAP 3/8-16UNCX1 GR5	4
10	1-654-010051-06	SCREW,HEX CAP 3/8-16UNCX1-1/4	2
11	1-654-010061-20	SCREW HX CP 3/4-1OUNCX7-1/2G5	1
12	1-861-010032-07	WASHER,FLAT 1/4 ZP	18
13	1-861-010032-11	WASHER, FLAT 3/8 W ZP/CD	8
14	1-861-010032-21	WASHER, FLAT 3/4 W ZP/CD	1
15	1-861-010034-11	WASHER, LKG HLCL SPR, 3/8	4
16	101299	KEY CHAIN, LANDOLL **(NOT SHOWN)**	1
17	105237	LATCH WLDMT G/N LOWER	1
18	105243	PIN,LOWER G/N LATCH 825	2
19	105245	PIN, G/N TO CARRIER 825	1
20	107887	VALVE AIR PUSH BUTTON	REF
21	125894	CLAMP, CABLE 5/8 SST	2
22	150076	MANUAL TUBE 4-1/4"ID	1
23	156430	SPRING CAP WLDMT	2
24	161165	CHANNEL WLDMT LH,LIFT G/N 855	1
25	161168	CHANNEL WLDMT RH,LIFT G/N 855	1
26	162788	SPRING ROD 855 G/N LIFTARM	2
27	168519	PLATE, TOP CONTROL BOX	1
28	170421	CYLINDER, HYD 8X36 0-RING **(SEE PAGE 1-35)**	REF
29	172354	CARRIER WLDMT 855HD	1
30	172362	LATCH WLDMT G/N UPPER 855HD	1
31	172365	PIN 2-1/2 855HD SHT ZP	4
32	172366	PIN 2-1/2 855HD LG ZP	2
33	172374	BAR WLDMT LIFT-ARM 855HD	1
34	172389	PIN WLDMT G/N SUPPORT	2
35	178444	BUSHING NYLON INSERT 9/16ID	1
36	189278	PLUG, PLASTIC PANEL 1/2 & 9/16	3
37	189279	PLUG, PLASTIC PANEL 5/8	1
38	189280	PLUG, PLASTIC PANEL 3/4	2
39	189282	PLUG, PLASTIC PANEL 7/8	2
40	197605	PLATE, BASE CONTROL BOX	1
41	199936	GALV OF 199981 855E-HD G/N **(USED W/ 199935)**	1
42	199942	SPRING CAP WLDMT 2 SIDES	2
43	199981	GOOSENECK WLDMT 855E-HD **(USED W/ 199980)**	1
44	2-720-010006	SPRING COULTER OUTER	4
45	2-720-010007	SPRING COULTER INNER	4
46	3-238-010007	CYLINDER AIR 1-3/4 BORE	REF
47	3-720-010075	SPRING EXTENSION 7/8X6	1

Eastern Plucker Sales Inc

General Assembly - 855E HD

ITEM	PART NO.	DESCRIPTION	QTY.
48	516-22PTL	RETAINING PIN MUD FLAP	2
49	5210	ZERK FITTING 1/4-28X45 SAE	4
50	622-3511-008	WASHER, FLAT 3/4 MIL-CARB SAE	2
51	9-630-010009	RING,RETAINING,EXTERNAL 2-1/2	12
52	169372	KINGPIN WLDMENT DROP-IN 2”	1

Eastern Wrecker Sales Inc

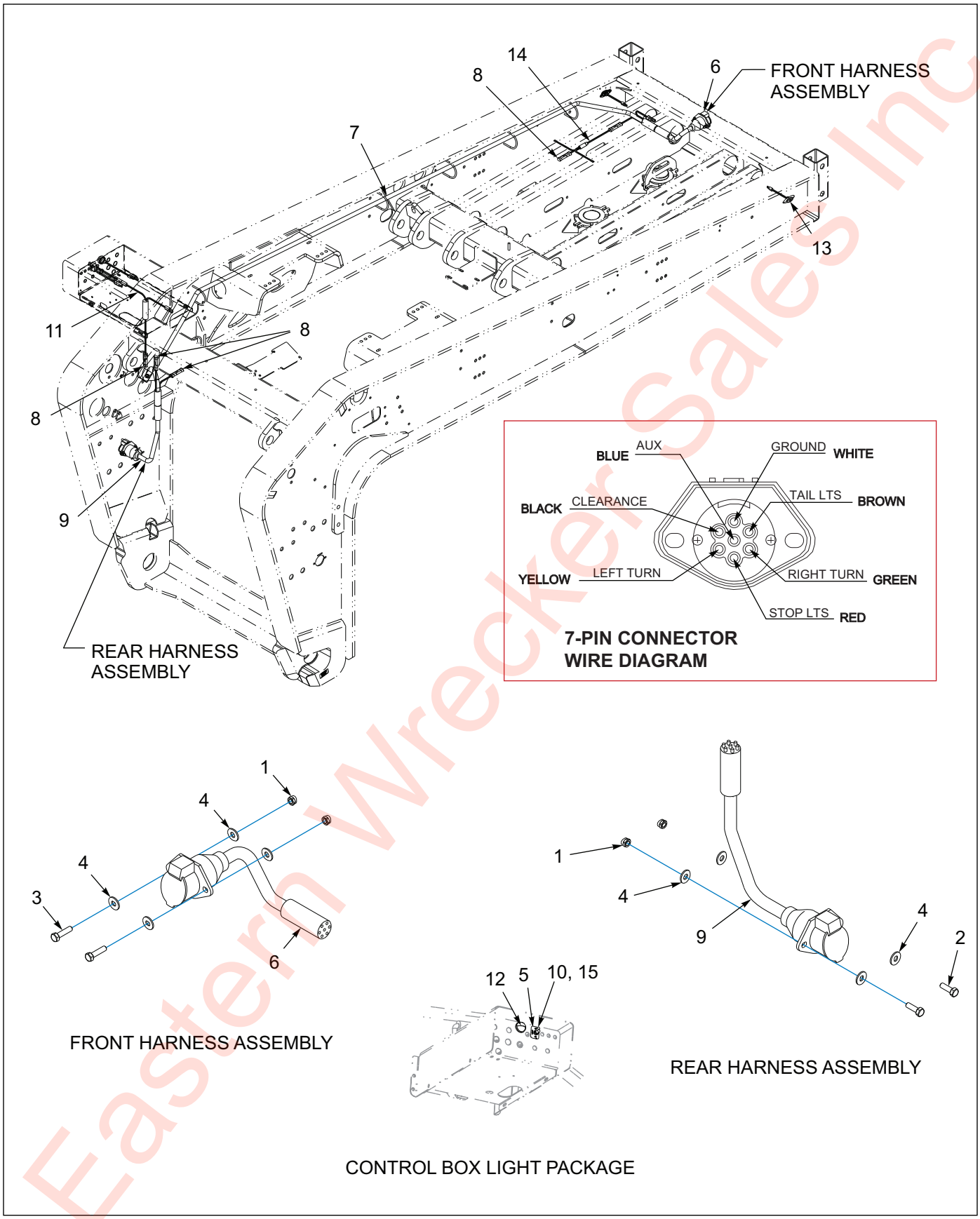

Figure 1-14: Electrical System - 855E HD

Eastern Wrecker Sales Inc

Electrical System - 855E HD

ITEM	PART NO.	DESCRIPTION	QTY.
	199980	GOOSENECK ASSY 855E-HD	
	199935	GALV OF 199980 855E-HD	
1	1-512-010005-03	NUT HEX SLFLKG GRB 5/16-18	4
2	1-654-010049-05	SCREW HX CP 5/16-18UNCX1 GR5	2
3	1-654-010049-06	SCREW,H/CAP,5/16-18UNCX1-1/4	2
4	1-861-010032-09	WASHER, FLAT 5/16 W ZP/CD	8
5	130116	DECAL, ON/OFF LIGHT	1
6	143100	HARNESS 7WAY RECP GROTE	1
7	143101	HARNESS FRONT MAIN GROTE	1
8	143121	DUMMY PLUG MALE/FEM BULLET	1
9	146897	HARNESS 7WAY RECP REAR GROTE	1
10	150117	SWITCH ASSY LIGHT GROTE	1
11	169853	HARNESS T PWR BRANCH	1
12	185059	LIGHT,LED COURTESY, GROTE	2
13	187863	LIGHT YEL LED.75CL/MK CLEAR CB	2
14	200036	HARNESS MARKER LFT SMALL END	1
15	81264	RUBBER BOOT FOR ELECT SWITCH	1

Eastern Wrecker Sales Inc

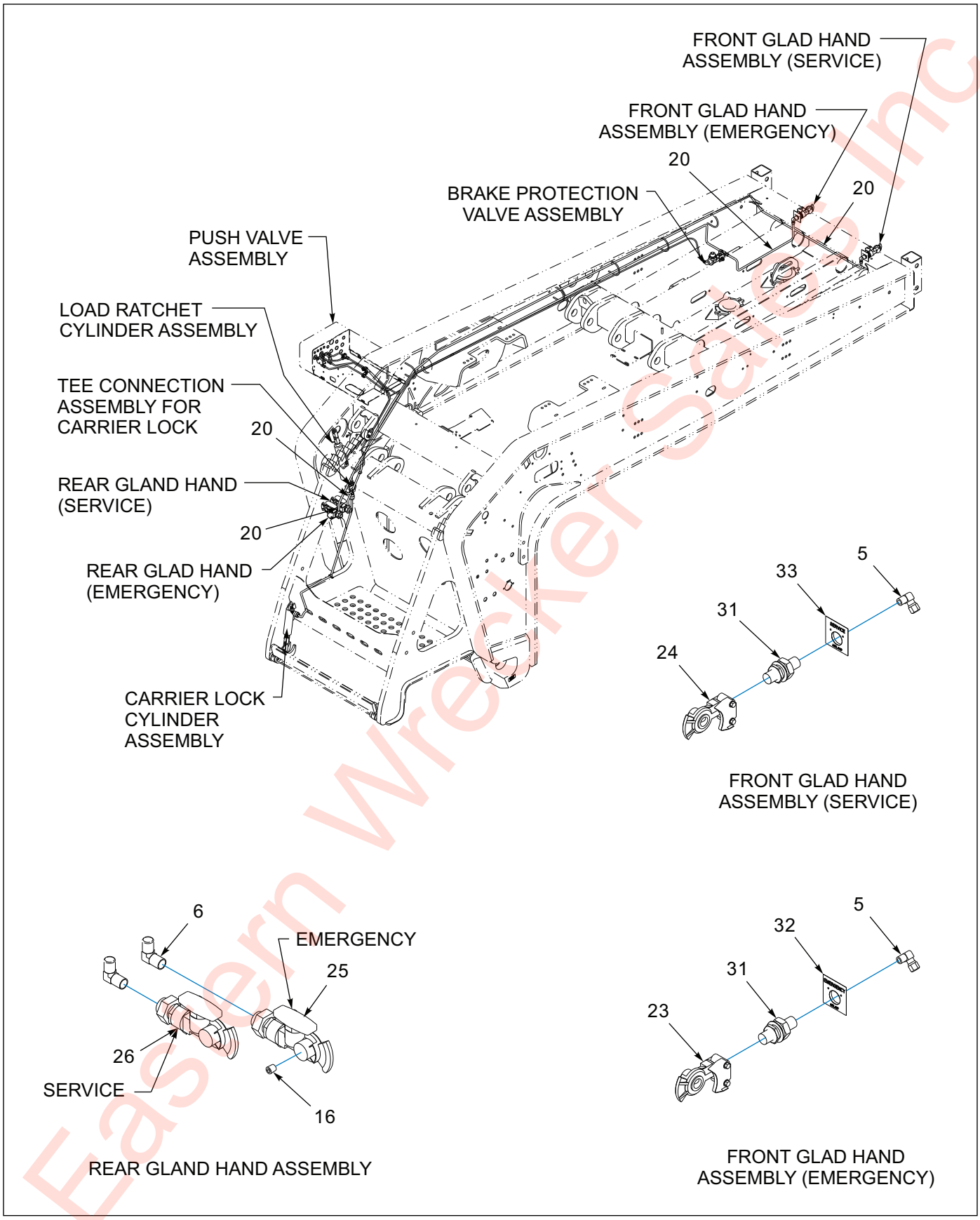

Figure 1-15: Air System - 855E HD (1 of 2)

Eastern Wrecker Sales Inc

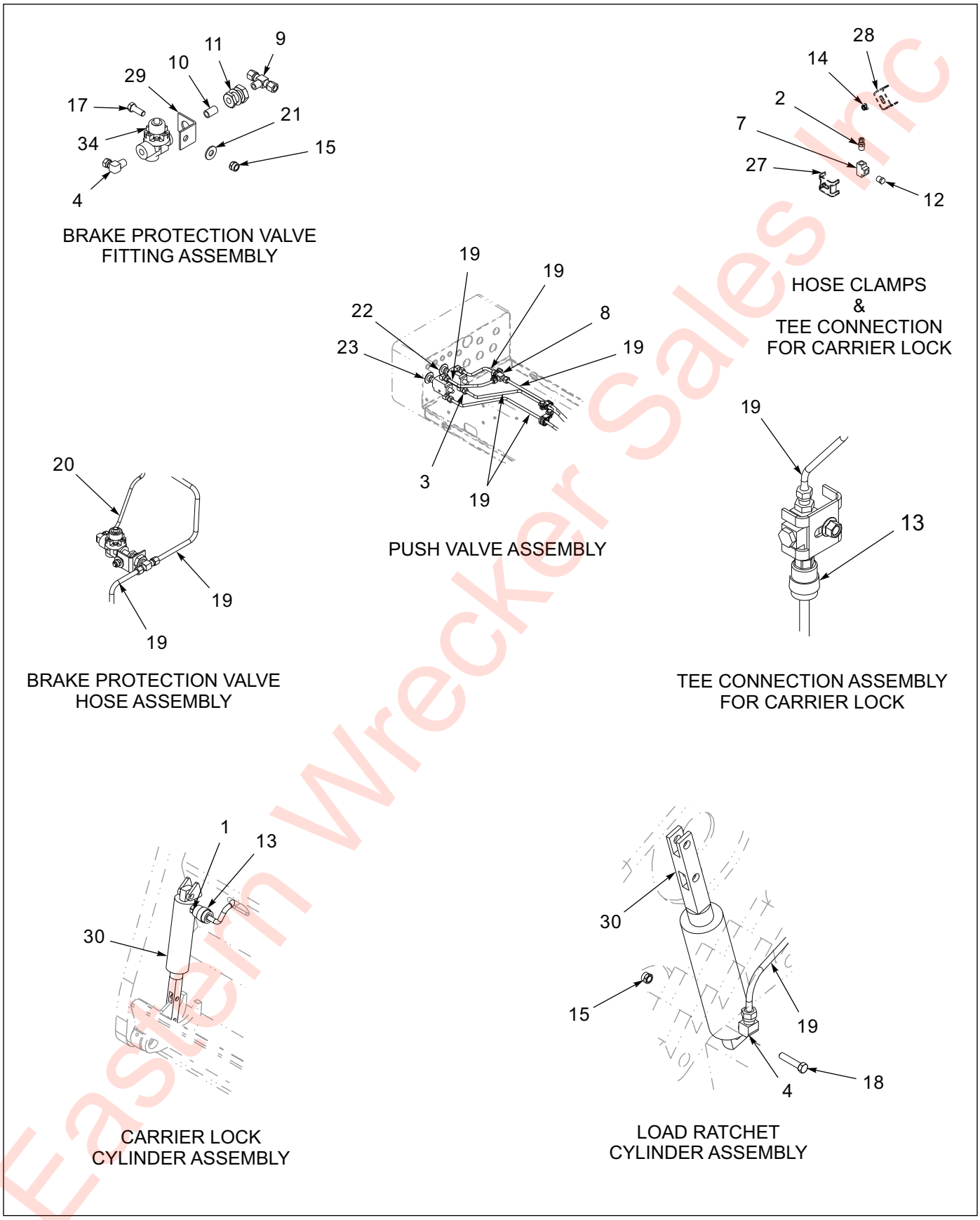

Eastern Wrecker Sales Inc

Figure 1-16: Air System - 855E HD (2 of 2)

Air System - 855E HD

ITEM	PART NO.	DESCRIPTION	QTY.
	199980	GOOSENECK ASSY 855E-HD	
	199935	GALV OF 199980 855E-HD	
1	1-297-010004-04	FITTING, BRASS PIPE ADAPTER	1
2	1-297-010007-06	FITTING, AIR	1
3	1-297-010008-05	FITTING, AIR 90	4
4	1-297-010008-07	FITTING, AIR 90	2
5	1-297-010008-18	FITTING, AIR 90	2
6	1-297-010008-20	FITTING, AIR 90	2
7	1-297-010009-03	FITTING, AIR PIPE TEE	1
8	1-297-010010-01	FITTING AIR, UNION TEE 1/4	1
9	1-297-010015-06	FITTING, AIR, BRASS TEE	1
10	1-297-010020-02	FITTING, AIR ANCHOR CL NIP	1
11	1-297-010022-02	FITTING, AIR ANCHOR COUPLING	1
12	1-297-010033-03	FITTING, BRASS PLUG HEX	1
13	1-384-010038060	HOSE, AIR 3/8 X 60	1
14	1-510-010001	NUT, FLANGED 3/8-16	2
15	1-512-010005-05	NUT, HEX LOCK 3/8-16 GRB	3
16	1-560-010002-02	PLUG, PIPE 1/4	1
17	1-654-010051-05	SCREW, HEX HEAD CAP 3/8-16 X 1 GR5	1
18	1-654-010051-08	SCREW, HEX HEAD CAP 3/8-16 X 1-3/4 GR5	2
19	1-833-010001	TUBING, NYLON 1/4	11
20	1-833-010002	TUBING, NYLON 3/8	40
21	1-861-010032-11	WASHER, FLAT 3/8W	1
22	107887	VALVE, AIR PUSH BUTTON	2
23	108801	GLAD HAND, RED AIR	1
24	108802	GLAD HAND, BLUE AIR	1
25	117838	GLAD HAND W/ SHUTOFF EMERGENCY	1
26	117839	GLAD HAND W/ SHUTOFF SERVICE	1
27	138814	HOSE CLAMP, NOTCHED	1
28	2-181-010001	CLAMP	1
29	3-120-010445	BRACKET, PRESSURE REGULATOR	1
30	3-238-010007	CYLINDER, AIR 1-3/4 BORE	2
31	55B61	FRAME UNION	2
32	55B61-6	TAG EMERGENCY LINE	1
33	55B61-7	TAG SERVICE LINE	1
34	905-54-107	BRAKE PROTECTION VALVE	1

Eastern Wecker Sales Inc

Table provided for general use.

NOTES:

Eastern Wrecker Sales Inc

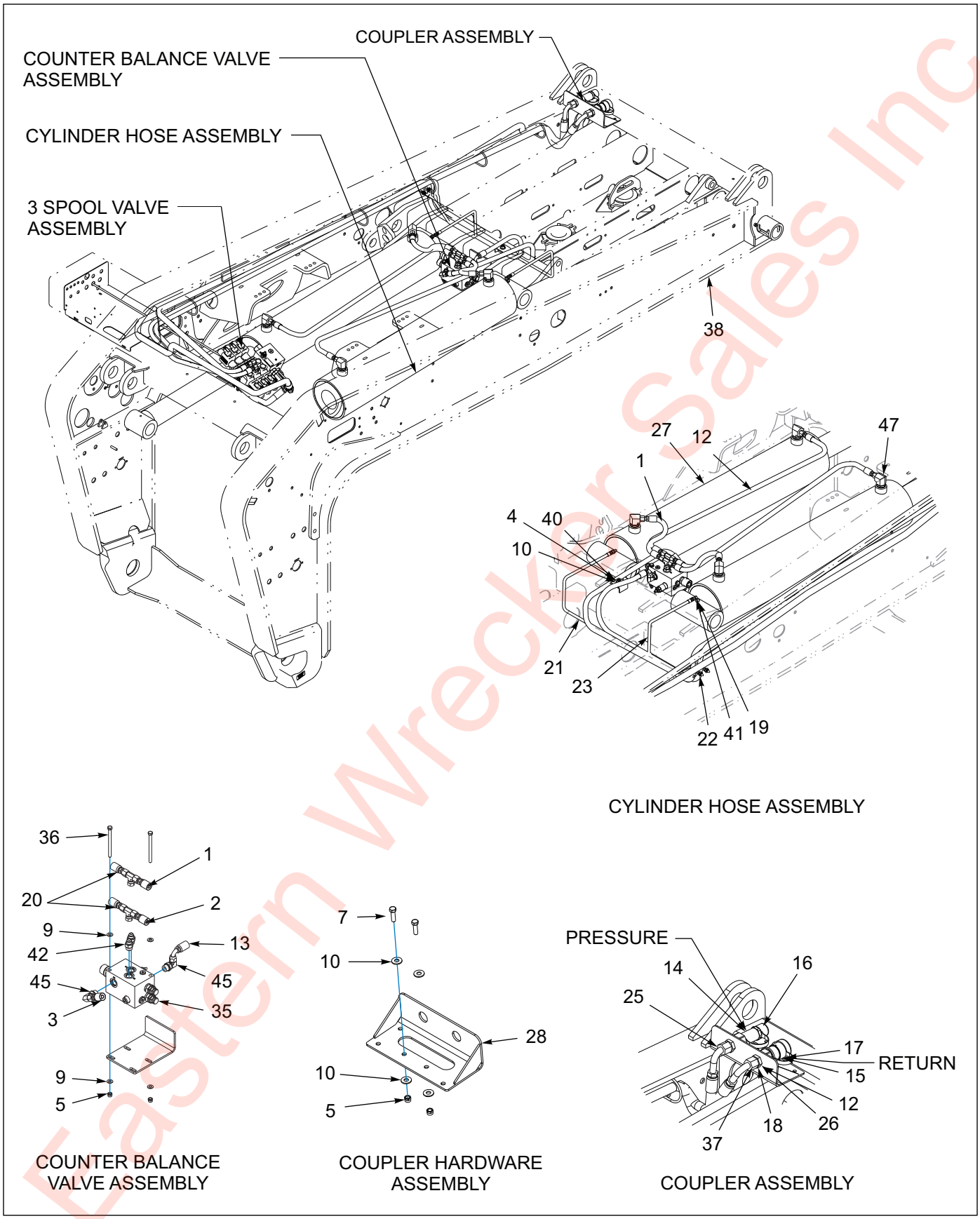

Figure 1-17: Hydraulic & Grease System - 855E HD (1 of 2)

Eastern Wrecker Sales Inc

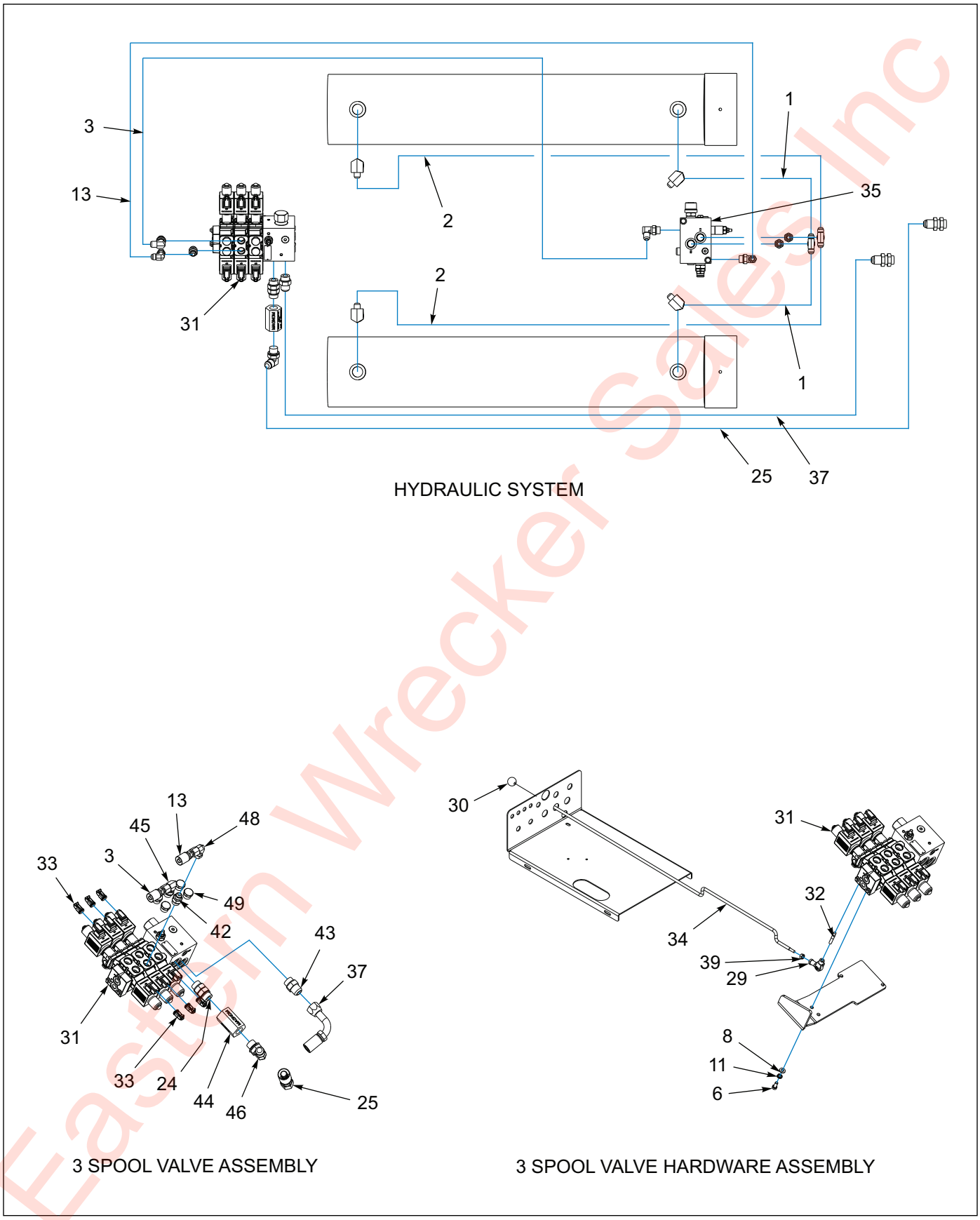

Eastern Wrecker Sales Inc

Figure 1-18: Hydraulic & Grease System - 855E HD (2 of 2)

Hydraulic & Grease System - 855E HD

ITEM	PART NO.	DESCRIPTION	QTY.
	199980	GOOSENECK ASSY 855E-HD	
1	1-397-010301018	HOSE ASSY1/2X18,SAE 37,STR-STR	2
2	1-397-010301054	HOSE ASSY,1/2X54,SAE 37 STR	2
3	1-397-010301136	HOSE ASSY,1/2X136 SAE 37 STR	1
4	1-510-010001	NUT, 3/8-16 UNC FLANGE LOCK	1
5	1-512-010005-05	NUT, HEX, SLFLKG GRB 3/8-16	4
6	1-654-010049-03	SCREW HX CP 5/16-18UNCX3/4GR5	4
7	1-654-010051-06	SCREW,HEX CAP 3/8-16UNCX1-1/4	2
8	1-861-010032-08	WASHER,FLAT 5/16 N ZP	4
9	1-861-010032-10	WASHER, FLAT 3/8" N ZP/CD	4
10	1-861-010032-11	WASHER, FLAT 3/8 W ZP/CD	5
11	1-861-010034-10	WASHER,LKG 5/16	4
12	1-861-010059-21	WASHER,LKG,INTL TOOTH 1-1/8	2
13	104370	HOSE ASSY 1/2X126,SAE37,STR90	1
14	105479	COUPLER FLAT FACE MALE NOSE	1
15	105480	COUPLER FLAT FACE FEMALE BODY	1
16	105481	COUPLER DUST CAP MALE	1
17	105482	COUPLER DUST CAP FEMALE	1
18	105483	ADAPTER BLKHD 12JIC-12 ORING	2
19	121355	ELBOW ST 45DEG 1/4-28X1/8PTF	2
20	123109	ADAPTER, TEE, #8JIC FEM BR	2
21	142442	HOSE ASSY,GREASE 1/4X60	1
22	142545	NUT 7/16 FOR BULKHEAD	2
23	146924	HOSE ASSY GREASE 1/4X36	1
24	158581	ADAPTER STR #12 ORB - #12 ORB	1
25	163352	HOSE ASSY,3/4X180,SAE37,STR90	1
26	169365	SPACER HYDR COUPLERS	2
27	170421	CYLINDER, HYD 8X36 0-RING **(SEE PAGE 1-35)**	2
28	182176	WLDMT, COUPLER MOUNT	1
29	186875	CLEVIS JOINT,ROD ENDS M8.1.25	1
30	186877	KNOB BLACK 1" ROUND M8X1.25THD	REF
31	186885	VALVE, 3 SP, 35 GPM, SOLENOID **(SEE PAGE 1-36)**	1
32	193910	STUD M8-1.25X50MM DBLE THD	1
33	194407	PLUG ASSY DUMMY DEUTSCH 2 PIN	6
34	197610	ROD HANDLE M8X1.25 ENDS LONG	1
35	197615	VALVE REGEN DUAL COUNTERBALANC	1
36	197617	SCREW,HEX CAP,3/8-16UNC, 4-3/4	2
37	197668	HOSE ASSY 3/4X172#12JIC 90-90L	1
38	199981	GOOSENECK WLDMT 855E-HD	REF
39	1DM8ER	NUT HEX HD M8X1.25 CL8.8	1
40	2-181-010001	HOSE CLAMP	1
41	2024-2-4S	ADAPTER, ELBOW	2
42	202702-10-8S	ADAPTER, #10 O-RING #8 TUBE	3
43	202702-12-12S	ADAPTER,#12 O-RING X #12 TUBE	1
44	204124	FILTER HYD IN-LINE MAGNETIC	1
45	2062-10-8S	ADAPTER,90, #10 O-RING-TUBE	3
46	2062-12-12S	ADAPTER,90,#12 O-RINGX#12TUBE	1
47	2062-16-8S	ADAPTER 90 1 BOSSX1/2 37	4
48	2071-8-8S	ADAPTER90 #8 FLR SWIVEL #8JIC	1

Eastern Wrecker Sales Inc

Hydraulic & Grease System - 855E HD

ITEM	PART NO.	DESCRIPTION	QTY.
49	620-0887	FTG,PLUG #10 MALE O-RING BOSS	4

Eastern Wrecker Sales Inc

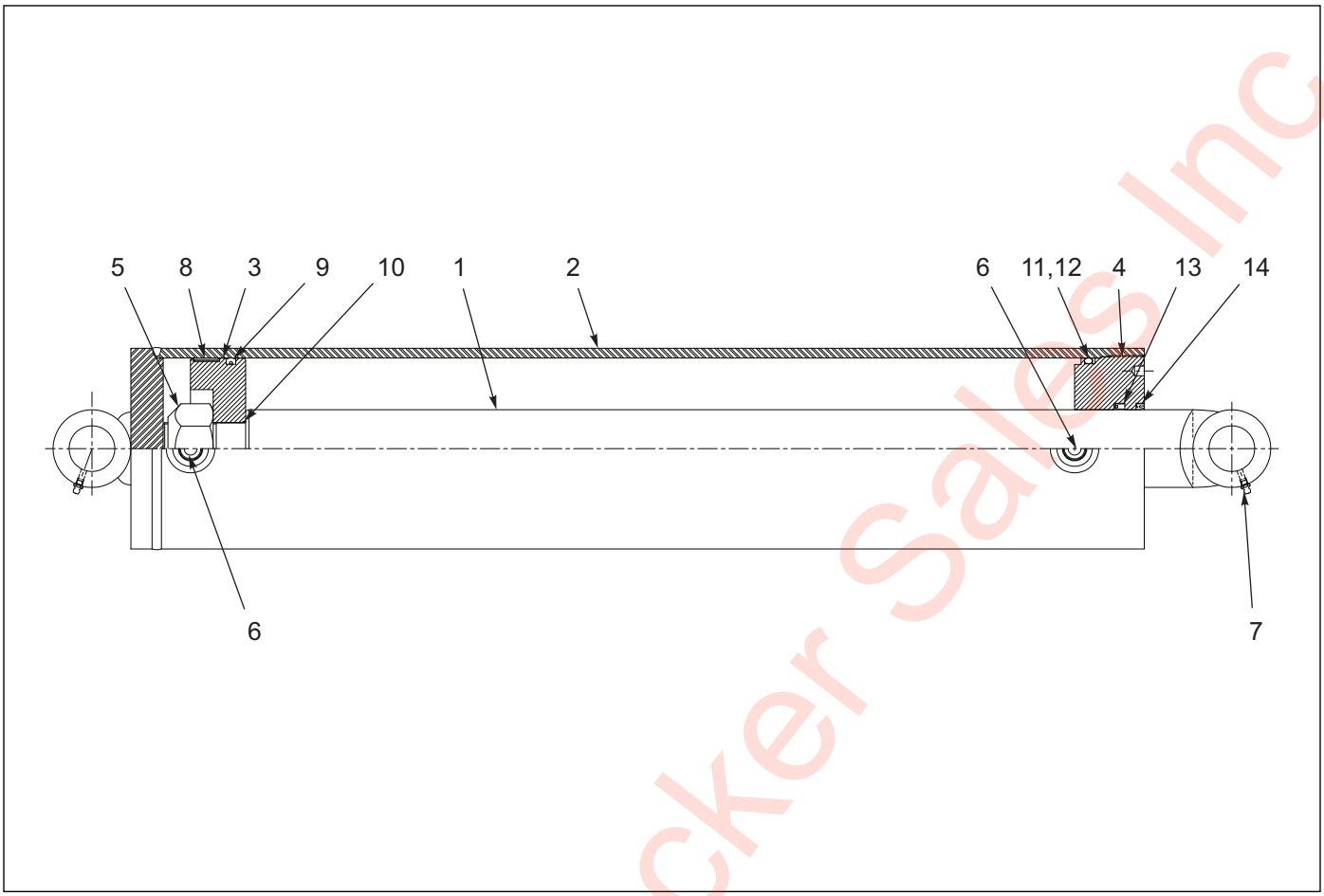

Figure 1-19: Hydraulic Cylinder 7 X 34

Hydraulic Cylinder 7 X 34

ITEM	PART NO.	DESCRIPTION	QTY.
	160366	CYLINDER HYDRAULIC 7 X 34 O-RING	
1	167199	PISTON ROD ASSEMBLY	1
2	-----	BUTT AND TUBE ASSEMBLY	1
3	-----	PISTON	1
4	167200	GLAND	1
5	-----	LOCKNUT	1
6	-----	PORT PLUG	2
7	-----	GREASE ZERK	2
8	-----	BEARING RING	1
9	-----	CROWN SEAL	1
10	-----	O-RING	1
11	-----	O-RING	1
12	-----	BU-WASHER	1
13	-----	U-CUP	1
14	-----	WIPER	1
15	167201	PACKING KIT **(ITEMS 9-14, NOT SHOWN)**	REF

Eastern Wrecker Sales Inc

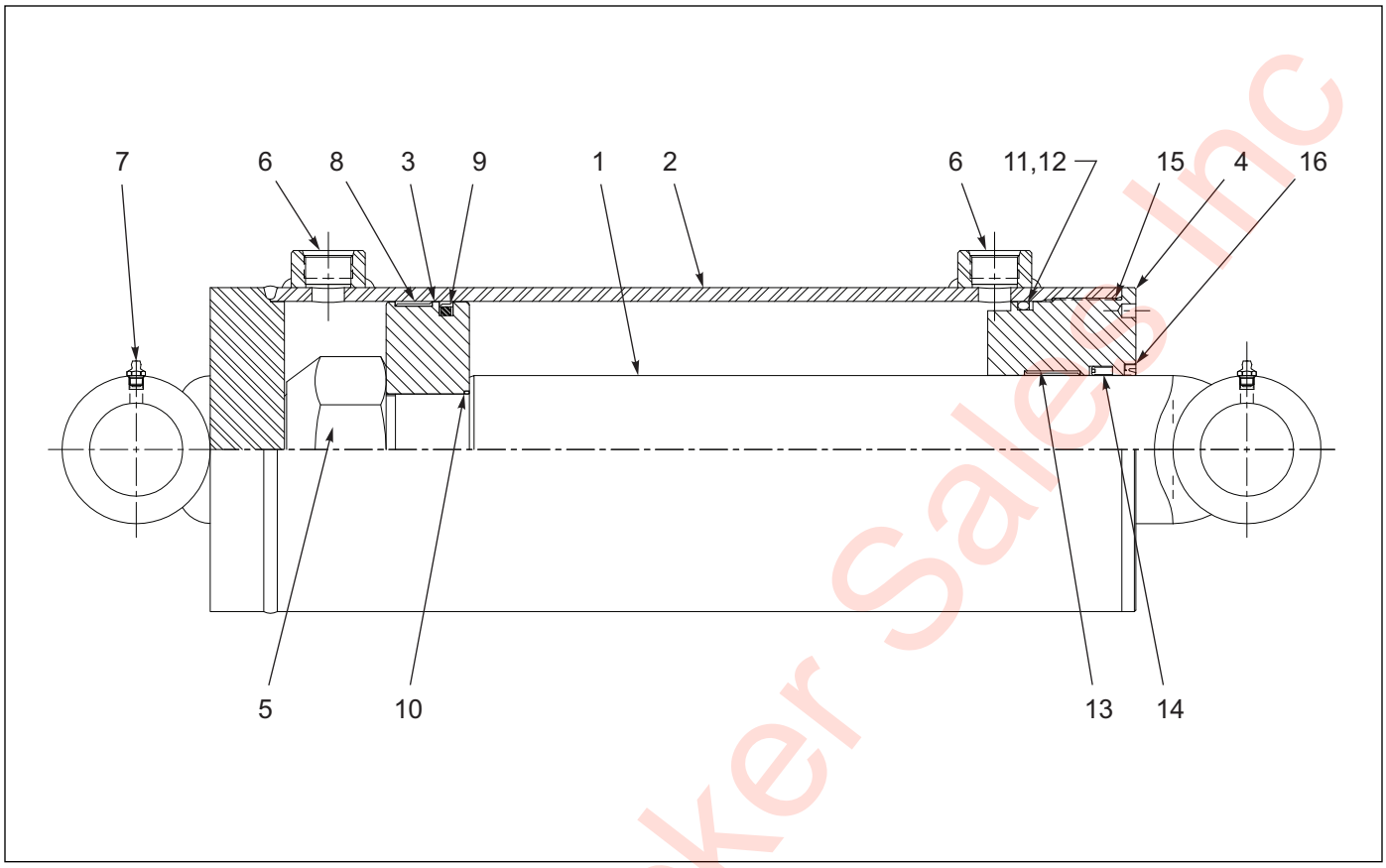

Figure 1-20: Hydraulic Cylinder 8 X 36

Hydraulic Cylinder 8 X 36

ITEM	PART NO.	DESCRIPTION	QTY.
	170421	CYLINDER HYDRAULIC 8 X 36 O-RING	
1	174152	PISTON ROD ASSEMBLY	1
2	-----	BUTT AND TUBE ASSEMBLY	1
3	-----	PISTON	1
4	174153	GLAND	1
5	-----	LOCKNUT	1
6	-----	PORT PLUG	2
7	-----	GREASE ZERK	2
8	-----	BEARING RING, PISTON	1
9	-----	CROWN SEAL	1
10	-----	O-RING	1
11	-----	O-RING	1
12	-----	BU-WASHER	1
13	-----	BEARING RING, GLAND	1
14	-----	U-CUP	1
15	-----	O-RING	1
16	-----	WIPER	1
17	174154	PACKING KIT **(ITEMS 8-16, NOT SHOWN)**	REF

Eastern Wrecker Sales Inc

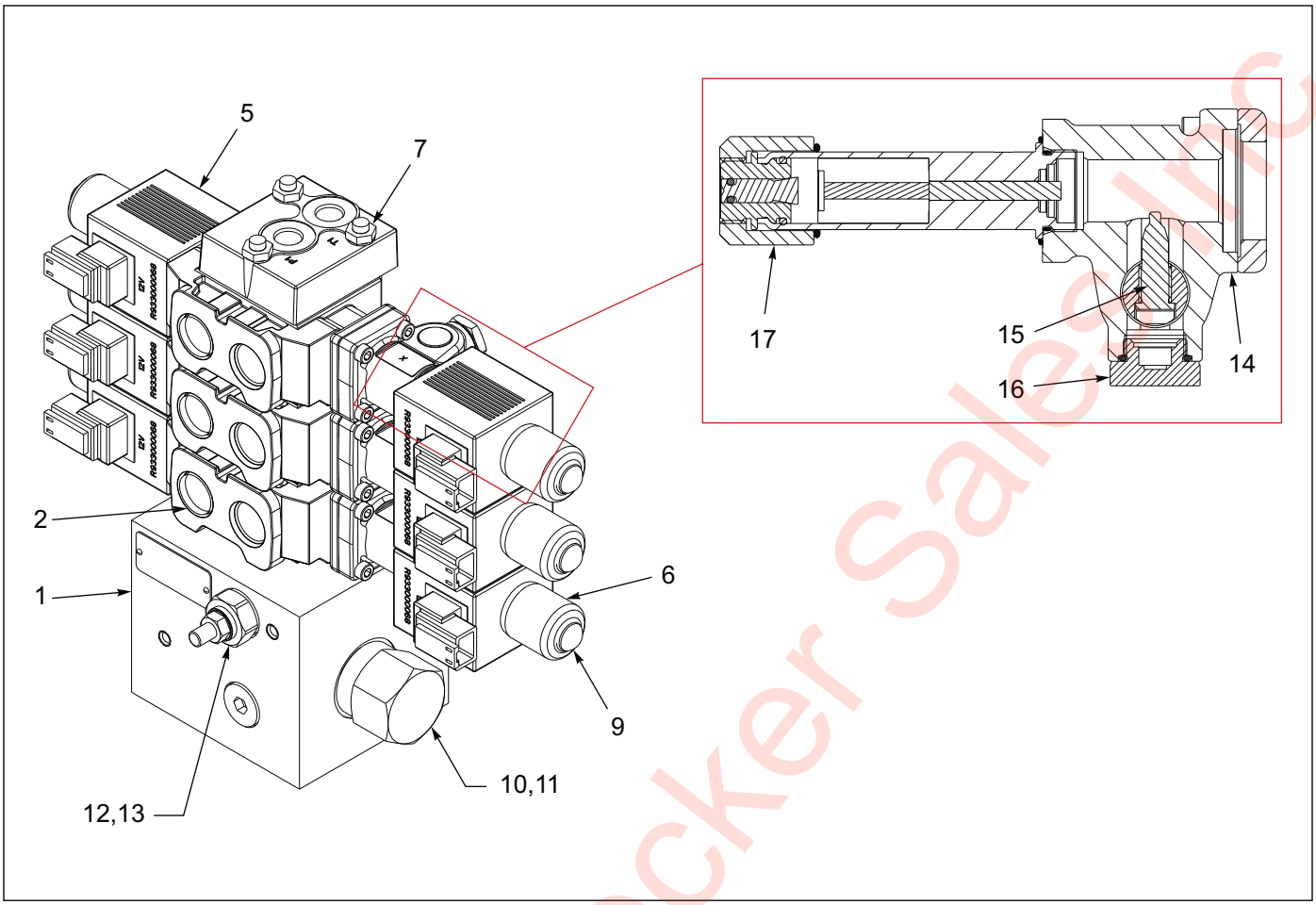

Figure 1-21: Three Spool Valve

Three Spool Valve

ITEM	PART NO.	DESCRIPTION	QTY.
	186885	VALVE, 3 SPOOL, SOLENOID, 35 GPM	
1	191847	INLET SECTION KIT	1
2	191848	VALVE SECTION KIT	3
3	191849	HANDLE ASSY **(NOT SHOWN)**	1
4	191850	HANDLE ASSY **(NOT SHOWN)**	2
5	193400	COIL	1
6	193401	RUBBER BOOT	1
7	193402	BOLT KIT	1
8	193442	VALVE SECTION SEAL KIT **(NOT SHOWN)**	1
9	193443	COIL NUT SEAL KIT	1
10	193444	BY-PASS COMENSATOR	1
11	193445	SEAL KIT FOR COMPENSATOR	1
12	193446	LOAD SENSE RELIEF	1
13	193447	LOAD SENSE RELIEF SEAL KIT	1
14	208390	KIT COMPLETE LEVER BOX, K-22144	1
15	204189	SET SCREW HANDLE ACTUATOR BALL	1
16	208391	PLUG	1
17	208392	COIL NUT LEVER BOX	1

Eastern Wrecker Sales Inc

Table provided for general use.

NOTES:

Eastern Wrecker Sales Inc

Front Flip Assemblies

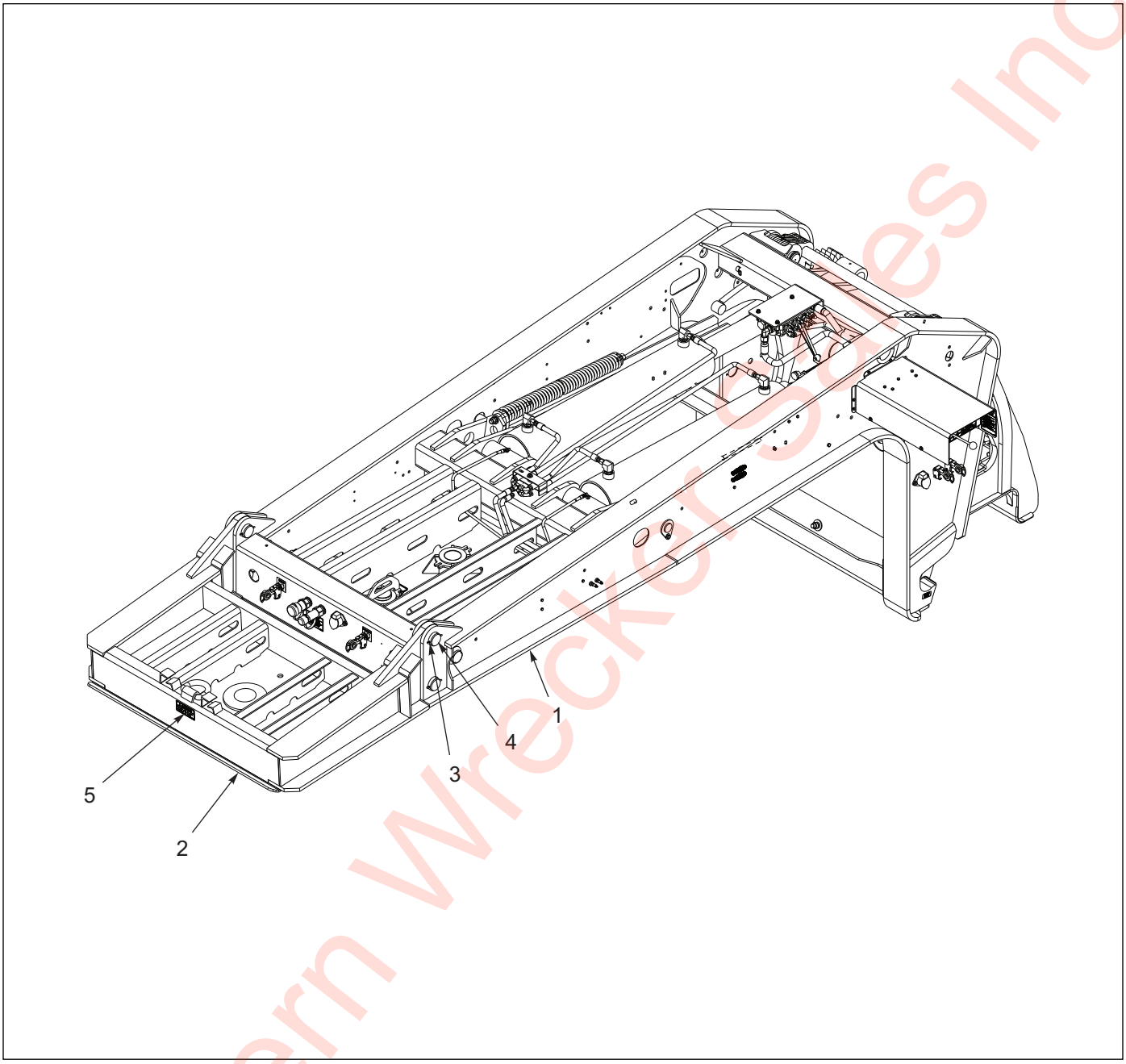

Figure 1-22: Front Gooseneck Flip Assembly - 36”

Front Gooseneck Flip Assembly - 36”

ITEM	PART NO.	DESCRIPTION	QTY.
	172429	FRONT G/N FLIP ASSEMBLY, 36”	
1	172030	GOOSENECK WELDMENT 855HD	REF
2	172378	FLIP WELDMENT, G/N 36”	1
3	1/4X3	COTTER PIN 1/4 X 3	8
4	3-557-010273	PIN, G/N FLIP	4
5	3-573-010496	DECAL, WARNING TIE DOWN	1

Eastern Wrecker Sales Inc

Table provided for general use.

NOTES:

Eastern Wrecker Sales Inc

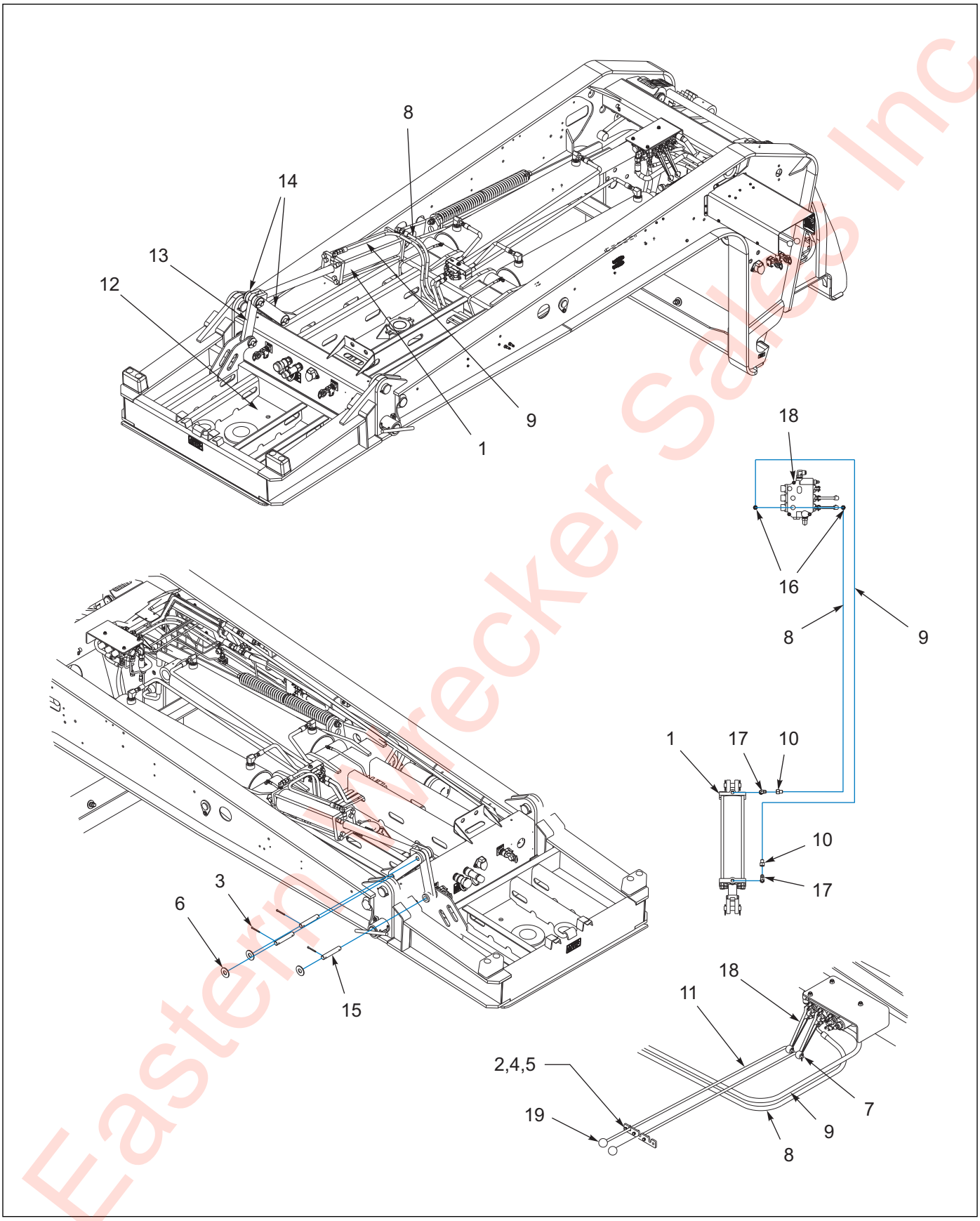

Figure 1-23: Front G/N Hydraulic Flip Extension Installation - 855E HD

Eastern Wrecker Sales Inc

Front G/N Hydraulic Flip Extension Installation - 855E HD

ITEM	PART NO.	DESCRIPTION	QTY.
	174248	FRONT G/N HYDRAULIC FLIP EXTENSION INSTALLATION	
1	1-242-010180-3	CYLINDER, HYDRAULIC 4 X 20 **(SEE PAGE 1-42)**	1
2	1-512-010005-01	NUT, HEX LOCK 1/4-20 GRB	1
3	1-557-010362-63	PIN, COTTER 1/4 X 2	6
4	1-654-010047-06	SCREW, HEX HEAD CAP 1/4-20 X 1 GR5	1
5	1-861-010032-07	WASHER, FLAT 1/4W	1
6	1-861-010032-25	WASHER, FLAT 1W	6
7	101386	PIN, COTTER 1/8 X 1	1
8	123812	HOSE ASSEMBLY 3/8 X 160	1
9	123873	HOSE ASSEMBLY 3/8 X 190	1
10	127806	WASHER, FLAT 1-1/4N	2
11	171678	HANDLE EXTENSION	1
12	172429	FRONT G/N FLIP ASSEMBLY 36”	REF
13	174249	LINK, FRONT HYD FLIP G/N	1
14	174250	LINK, REAR HYD FLIP G/N	2
15	2-557-010054	PIN, EXTENDED CYLINDER	3
16	202702-8-8S	ADAPTER	6
17	2062-8-8S	ADAPTER, 90	2
18	3-360-010008	VALVE, HANDLE MODIFICATION	1
19	95	KNOB	1

Eastern Wrecker Sales Inc

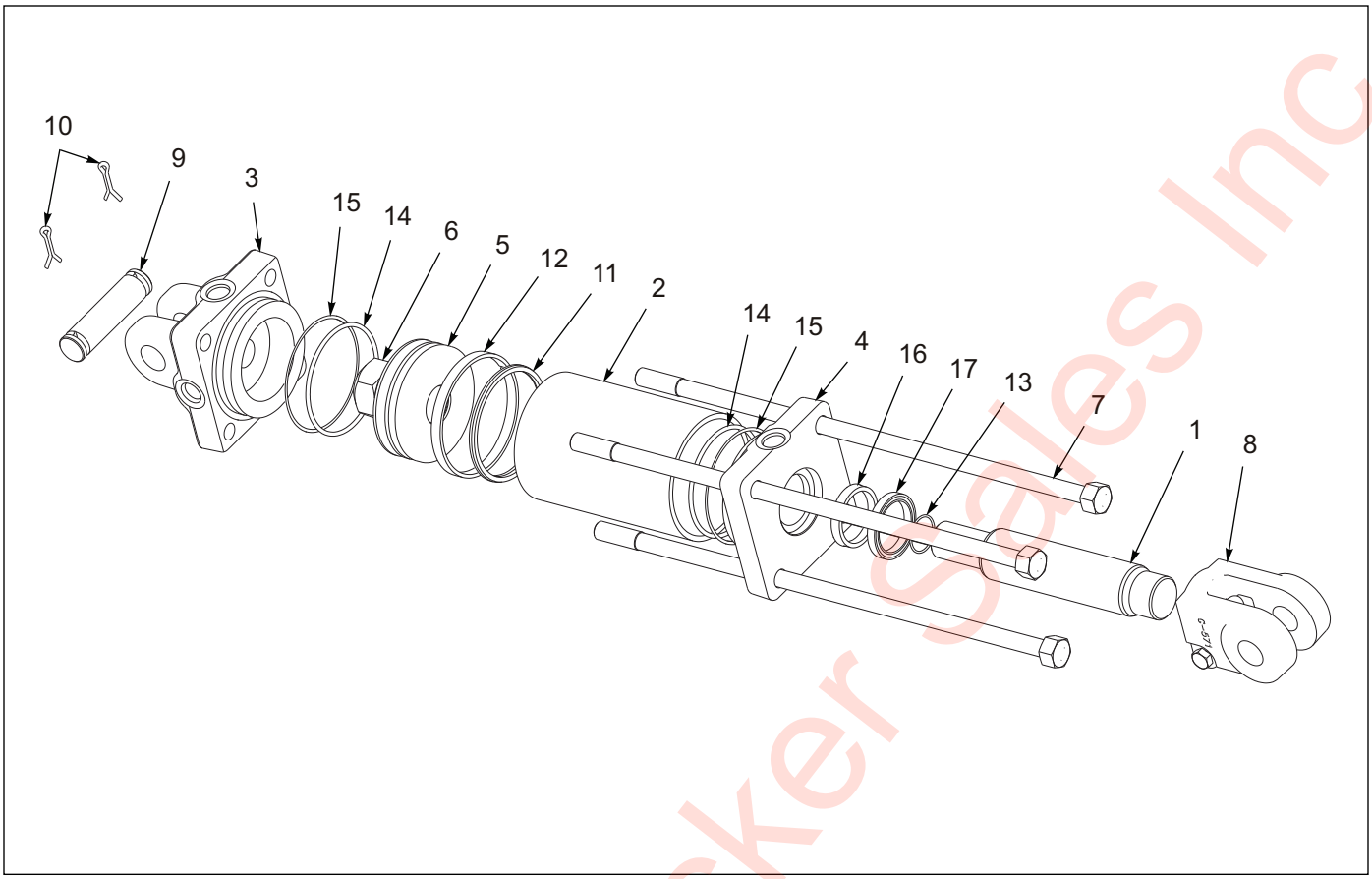

Figure 1-24: Hydraulic Cylinder - 4 X 20

Hydraulic Cylinder - 4 X 20

ITEM	PART NO.	DESCRIPTION	QTY.
	1-242-010180-3	CYLINDER, 4 X 20 HYDRAULIC	
1	147372	PISTON ROD	1
2	-----	TUBE	1
3	-----	BUTT	1
4	163045	GLAND	1
5	-----	PISTON	1
6	-----	LOCKNUT	1
7	-----	TIEROD ASSEMBLY	4
8	-----	CLEVIS ASSEMBLY	1
9	-----	CLEVIS PIN	2
10	-----	COTTER PIN	4
11	-----	CROWN SEAL	1
12	-----	BEARING RING	1
13	-----	O-RING	2
14	-----	O-RING	1
15	-----	BU-WASHER	2
16	-----	U-CUP	1
17	-----	WIPER	1
18	147377	PACKING KIT (ITEMS 11-17, NOT SHOWN)	REF

Eastern Wrecker Sales Inc

Table provided for general use.

NOTES:

Eastern Wrecker Sales Inc

Frame Assemblies - 855E

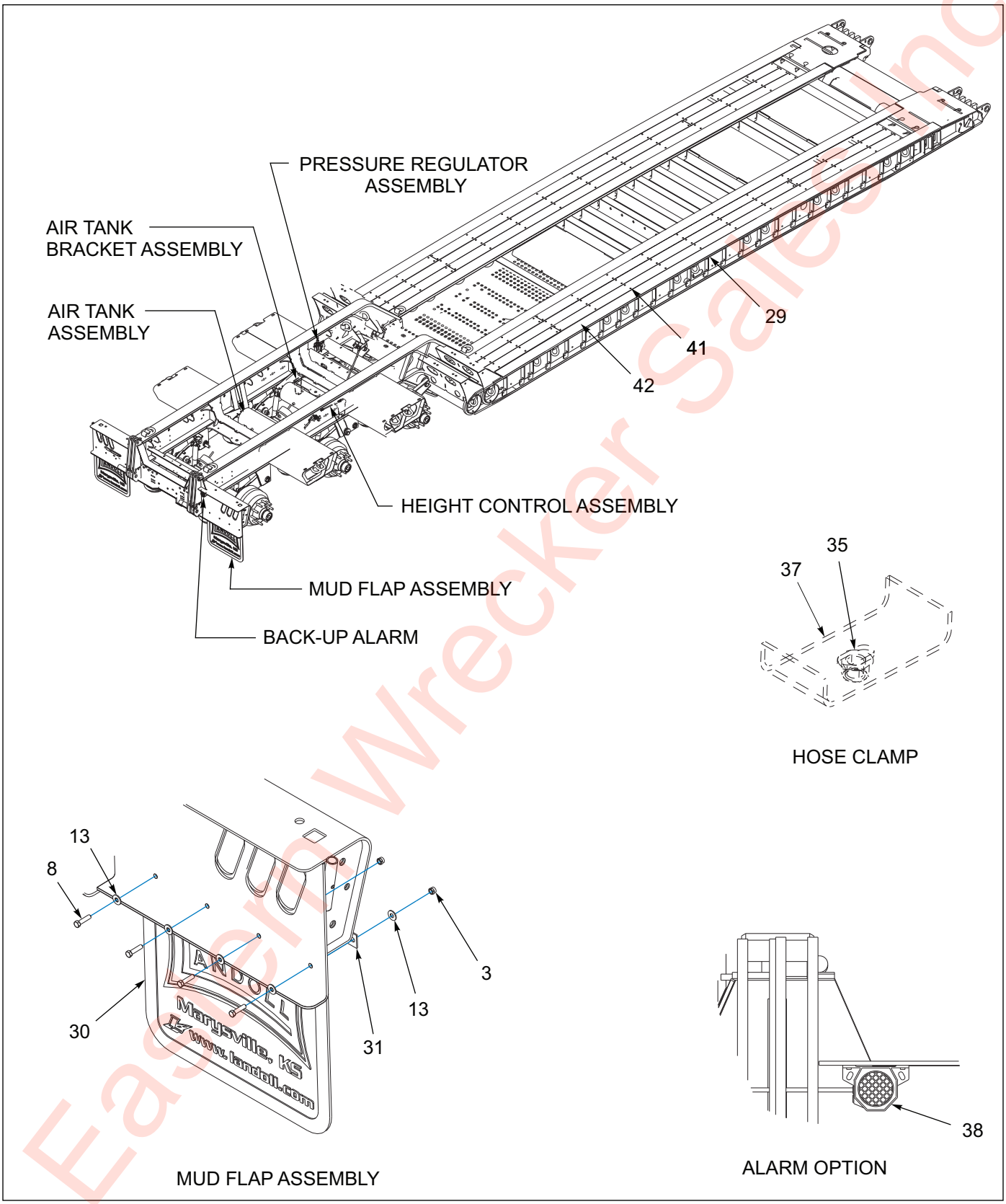

Figure 1-25: General Assembly - 855E (1 of 2)

Eastern Wrecker Sales Inc

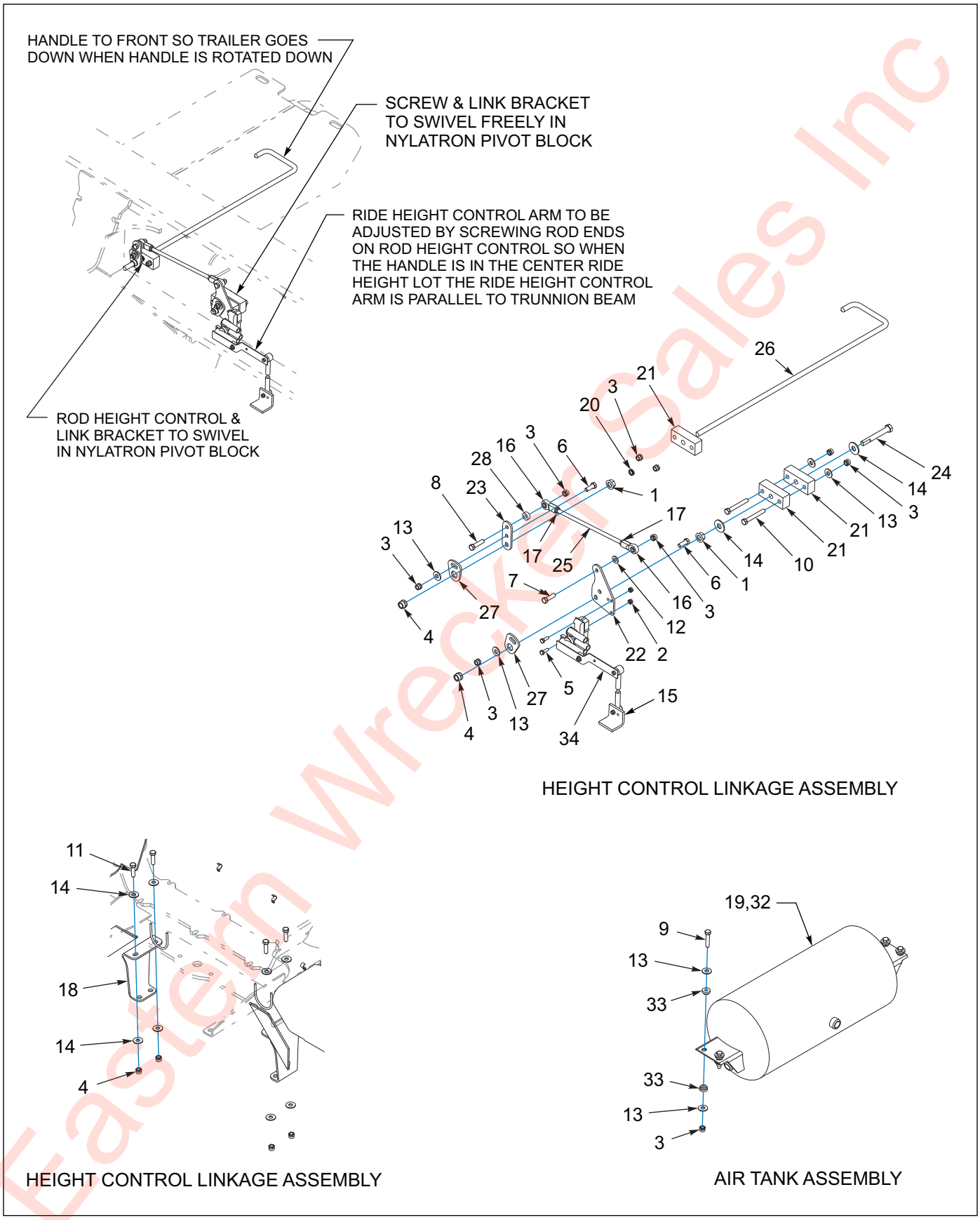

Figure 1-26: General Assembly - 855E (2 of 2)

Eastern Wrecker Sales Inc

General Assembly - 855E

ITEM	PART NO.	DESCRIPTION	QTY.
	198484	FRAME ASSY 855E 26' GROTE	
	198485	FRAME ASSY 855E 23-1/2 GROTE	
	198486	FRAME ASSY 855E 27-1/2' GROTE	
	198487	FRAME ASSY 855E 25' GROTE	
	198488	FRAME ASSY 855E 25' GALV	
	198489	FRAME ASSY 855E 26' GALV	
	198490	FRAME ASSY 855E 23-1/2' GALV	
	198491	FRAME ASSY 855E 27-1/2' GALV	
	198509	FRAME ASSY 855E-26 HYD FLIP	
	198510	FRAME ASSY 855E-26 HYD GALV	
	198511	FRAME ASSY 855E-25 HYD GALV	
	198512	FRAME ASSY 855E-25 HYD FLIP	
	198513	FRAME ASSY 855E 27-1/2 HYD FLP	
	198514	FRAME ASSY 855E 27-1/2 HYD GAL	
1	1-510-010003-09	NUT,1/2-13 FLANGE HD,SERRATED	2
2	1-512-010005-01	NUT,HEX,SLFLKG GRB 1/4-20	2
3	1-512-010005-05	NUT, HEX, SLFLKG GRB 3/8-16	28
4	1-512-010005-09	NUT,HEX,SLFLKG, 1/2-13 GRB	6
5	1-654-010047-04	SCREW,HEX CAP,1/4-20X3/4 GR5	2
6	1-654-010051-05	SCREW,HEX CAP 3/8-16UNCX1 GR5	2
7	1-654-010051-06	SCREW,HEX CAP 3/8-16UNCX1-1/4	1
8	1-654-010051-07	SCREW,HEX CAP,3/8-16UNCX1-1/2	9
9	1-654-010051-08	SCREW,HEX CAP,3/8-16X1-3/4 G	12
10	1-654-010051-12	SCREW,HEX CAP,3/8-16UNCX2-3/4	2
11	1-654-010055-04	SCREW,HEX CAP,1/2-13UNCX1-3/4	4
12	1-861-010032-10	WASHER, FLAT 3/8" N ZP/CD	1
13	1-861-010032-11	WASHER, FLAT 3/8 W ZP/CD	44
14	1-861-010032-15	WASHER, FLAT 1/2 W ZP/CD	10
15	111021	KIT SRK-167 NEWAY 952-50-001	REF
16	123717	ROD END, BALL JOINT 3/8	2
17	123869	NUT HX JAM 3/8-24UNF GR2	2
18	163092	BRACKET AIR TANK TRL 855	2
19	171664	AIR TANK MODIFY BRKT	REF
20	174178	SPRING, COMP HGT CONTROL	1
21	194415	PIVOT BLOCK NYLATRON HC	3
22	194417	LINK VALVE HT CTRL 855	1
23	194418	LINK ROD HT CTRL 855	1
24	194419	SCREW PIVOT HEIGHT CONTROL	1
25	194424	ROD HEIGHT CONTROL 855	1
26	194425	ROD HEIGHT CTRL 835	1
27	194426	ANTI-ROTATION WASHER 3/8	2
28	194427	SPACER WASHER HC	1
29	-----	FRAME WELDMENT	REF
30	3-485-010001	FLAP, MUD 21 IN	2
31	3-762-010017	CLAMP MUD FLAP	2
32	3-780-010002	TANK AIR 9.5X22.5 .5NPT PORTS	REF
33	805-2	BUSHINGS, STEP	24
34	900 54 007	HEIGHT CONTROL VALVE N	REF
35	1-510-010001	NUT, 3/8-16 UNC FLANGE LOCK	1

Eastern Trailer Sales Inc

General Assembly - 855E

ITEM	PART NO.	DESCRIPTION	QTY.
36	1-796-010001	TIE WIRE 22 PLASTIC **(NOT SHOWN)**	5
37	103817	CLAMP,HOSE 660 U/C	1
38	117997	ALARM DB ADJ SMART BACKUP	REF
39	145499	PRESERVATIVE WOODGUARD **(NOT SHOWN)**	.5
40	3-201-010002	CONDUIT 3/8 PLASTIC FLEX **(NOT SHOWN)**	8
41	3-654-010129-2	SCREW,5/16X3ZP TORX FLOOR	AR
42	RWD39062	APITONG 2X5-7/8 NET S4S	AR

Eastern Wrecker Sales Inc

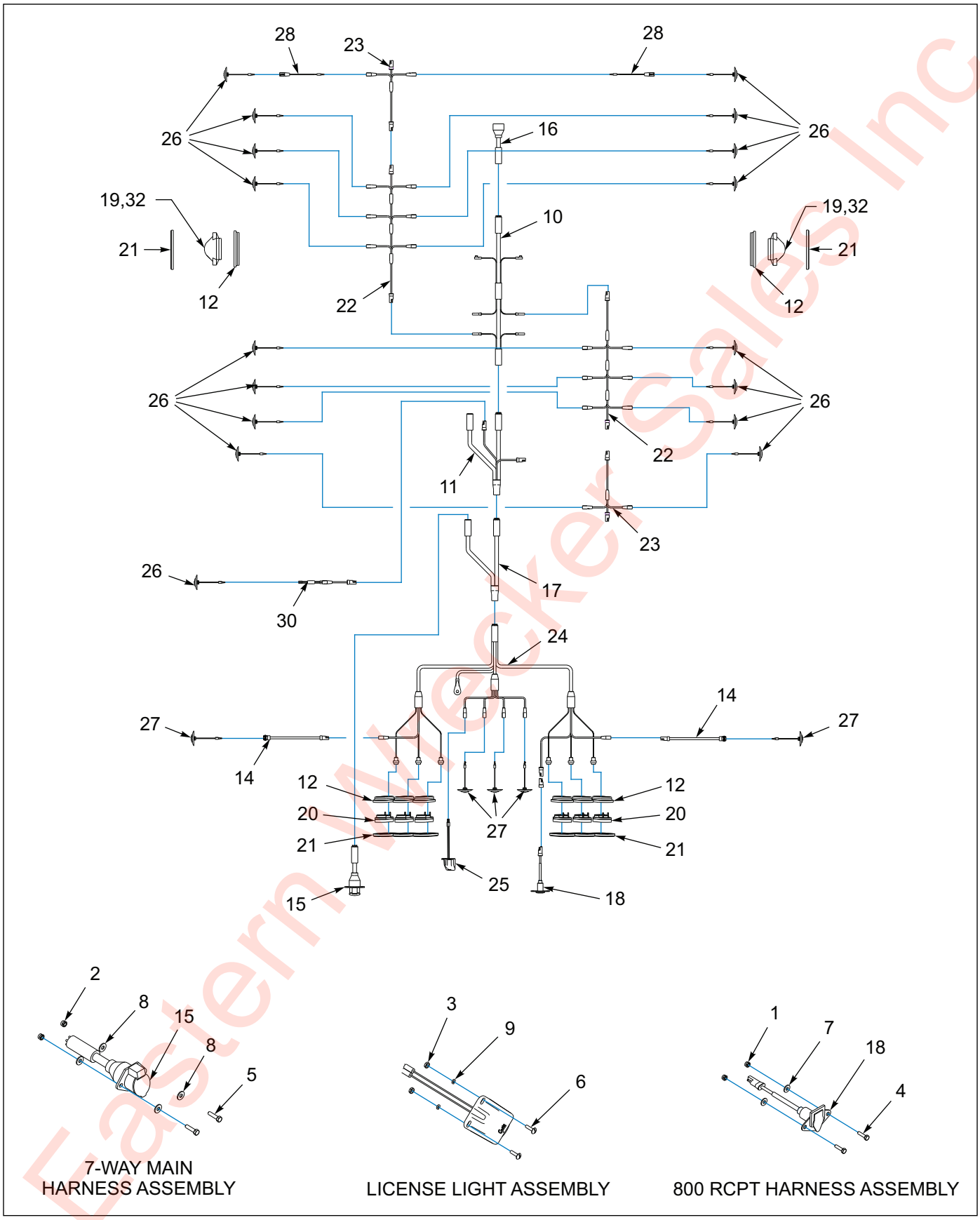

Figure 1-27: Electrical System - 855E

Eastern Wrecker Sales Inc

Electrical System - 855E

ITEM	PART NO.	DESCRIPTION	QTY.		
	198485	FRAME ASSY 855E 23-1/2 GROTE	*		
	198490	FRAME ASSY 855E 23-1/2 GALV	*		
	198484	FRAME ASSY 855E 26' GROTE		*	
	198486	FRAME ASSY 855E 27-1/2' GROTE		*	
	198487	FRAME ASSY 855E 25' GROTE		*	
	198488	FRAME ASSY 855E 25' GALV		*	
	198489	FRAME ASSY 855E 26' GALV		*	
	198491	FRAME ASSY 855E 27-1/2' GALV		*	
	198509	FRAME ASSY 855E-26 HYD FLIP			*
	198510	FRAME ASSY 855E-26 HYD GALV			*
	198511	FRAME ASSY 855E-25 HYD GALV			*
	198512	FRAME ASSY 855E-25 HYD FLIP			*
	198513	FRAME ASSY 855E 27-1/2 HYD FLP			*
	198514	FRAME ASSY 855E 27-1/2 HYD GAL			*
1	1-512-010005-01	NUT,HEX,SLFLKG GRB 1/4-20	2	2	2
2	1-512-010005-03	NUT HEX SLFLKG GRB 5/16-18	2	2	2
3	1-512-010007-03	NUT, HEX 10-24	2	2	2
4	1-654-010047-06	SCREW,HX CP 1/4-20UNCX1 GR5	2	2	2
5	1-654-010049-06	SCREW,H/CAP,5/16-18UNCX1-1/4	2	2	2
6	1-656-010003051	SCREW,RH HD MACH 10-24X3/4	2	2	2
7	1-861-010032-07	WASHER,FLAT 1/4 ZP	2	2	2
8	1-861-010032-09	WASHER, FLAT 5/16 W ZP/CD	4	4	4
9	1-861-010034-07	WASHER,LKG,HLCL SPR, NO 10	2	2	2
10	143102	HARNESS BED MAIN GROTE	1	1	1
11	143103	HARNESS ECHAIN GROTE	1	1	1
12	143114	GROMMET OVAL GROTE **(BEFORE 01/02/20)**	8	8	8
13	143123	GREASE DIELECTRIC 4 OZ TUBE **(NOT SHOWN)**	.25	.25	.25
14	144609	MARKER LAMP PIGTAIL HARNESS	2	2	2
15	146897	HARNESS 7WAY RECP REAR GROTE	1	1	1
16	146898	HARNESS 7WAY PLUG G/N GROTE	1	1	1
17	146929	HARNESS Y SPLITTER GROTE	1	1	1
18	150116	HARNESS ASSY RCPT 800	1	1	1
19	169410	LIGHT YEL MID TURN GROTE	2	2	--
20	179902	LIGHT S/T/T RED CLEAR LENS GRT **(BEFORE 01/02/20)**	6	6	6
20	213295	LIGHT S/T/T RED CLEAR LENS GRT **(AFTER 01/02/20)**	6	6	6
21	180570	COVER CHROME OBLONG GROM **(BEFORE 01/02/20)**	8	8	8
21	213296	COVER CHROME OBLONG GROM **(AFTER 01/02/20)**	8	8	8
22	187856	HARNESS MARKER MID DECK	2	2	2
23	187857	HARNESS MARKER ADDITION	--	2	2
24	187859	HARNESS BUMPER MICRONOVA GROTE	1	1	1
25	187860	LIGHT ASSY LICENSE LED GROTE	1	1	1
26	187863	LIGHT YEL LED.75CL/MK CLEAR CB	13	17	17
27	187864	LIGHT RED LED.75CL/MK CLEAR CB	5	5	5
28	191568	HARNESS MARKER LAMP MICRONOVA	2	2	2
29	-----	FRAME WLDMT 855E-26 **(NOT SHOWN)**	REF	REF	REF
30	200037	HARNESS ABS LIGHT SHORT	1	1	1
31	43029	HOSE WRAP AEROQUIP 1/4 **(NOT SHOWN)**	3	3	3
32	187868	LIGHT MID-TURN LED CLEAR LENS	--	--	2

Eastern Marker Sales Inc

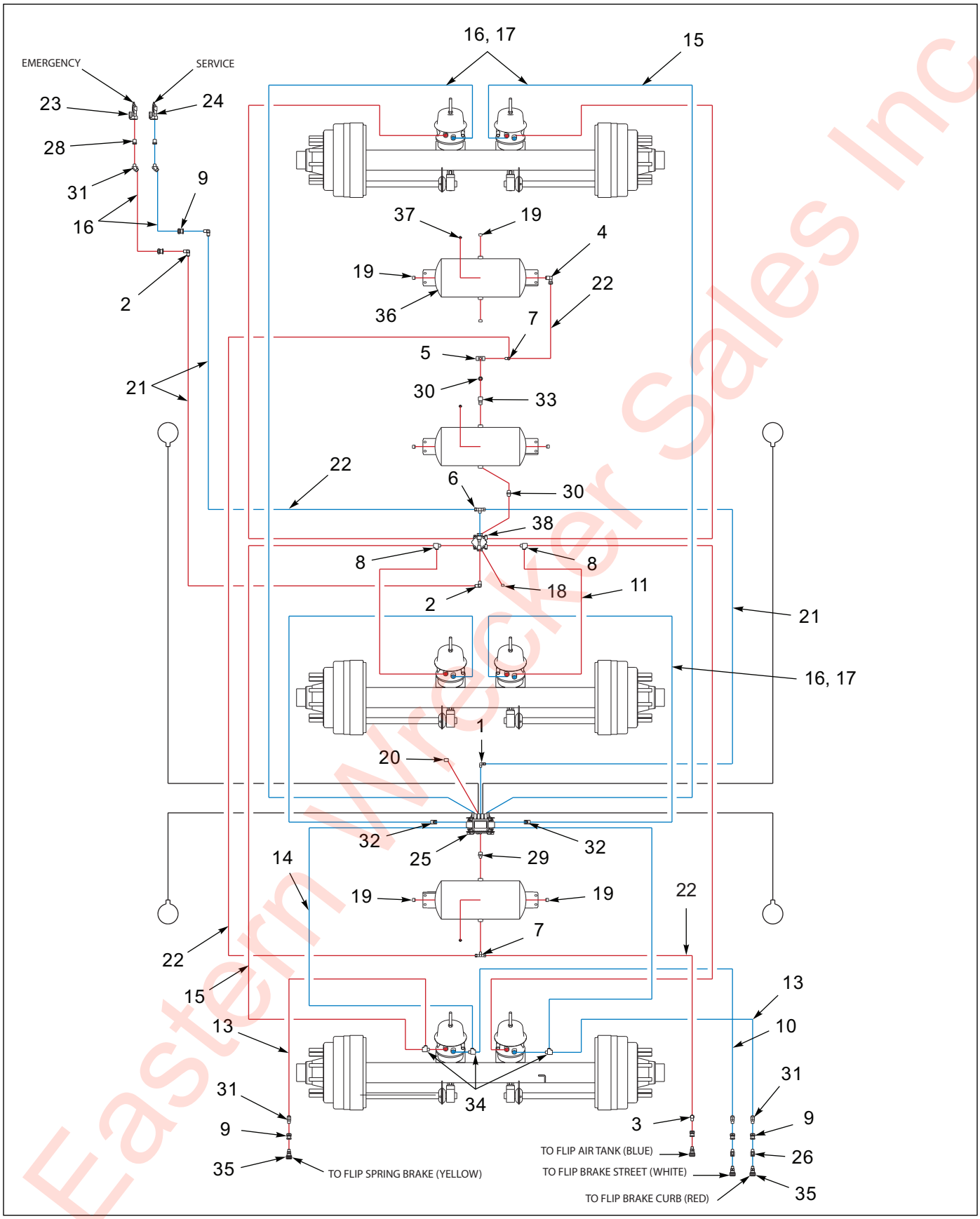

Figure 1-28: Air Brake System - 855E

Eastern Wrecker Sales Inc

Air Brake System - 855E

ITEM	PART NO.	DESCRIPTION	QTY.	
	198484	FRAME ASSY 855E 26' GROTE	*	
	198485	FRAME ASSY 855E 23-1/2 GROTE	*	
	198486	FRAME ASSY 855E 27-1/2' GROTE	*	
	198489	FRAME ASSY 855E 26' GALV	*	
	198490	FRAME ASSY 855E 23-1/2 GALV	*	
	198491	FRAME ASSY 855E 27-1/2' GALV	*	
	198509	FRAME ASSY 855E-26 HYD FLIP	*	
	198510	FRAME ASSY 855E-26 HYD GALV	*	
	198513	FRAME ASSY 855E 27-1/2 HYD FLP	*	
	198514	FRAME ASSY 855E 27-1/2 HYD GAL	*	
	198487	FRAME ASSY 855E 25' GROTE		*
	198488	FRAME ASSY 855E 25' GALV		*
	198511	FRAME ASSY 855E-25 HYD GALV		*
	198512	FRAME ASSY 855E-25 HYD FLIP		*
1	1-297-010008-18	FITTING,AIR 90 3/8TUBEX1/4NPT	1	1
2	1-297-010008-20	FITTING,AIR 90 3/8TUBEX3/8NPT	3	3
3	1-297-010008-23	FITTING,AIR 90 1/2TUBEX3/8NPT	1	1
4	1-297-010008-24	FITTING,AIR 90 1/2TUBEX1/2NPT	1	1
5	1-297-010009-04	FITTING,AIR, PIPE TEE 1/2	1	1
6	1-297-010015-07	FITTING,AIR,BR TEE 3/8T-3/8P	1	1
7	1-297-010015-11	FITTING,AIR,BR TEE 1/2T-1/2P	2	2
8	1-297-010018-03	FITTING,3/8 BRASS PIPE,ST TEE	2	2
9	1-297-010022-03	FITTING,AIR ANCHR CPLG, 3/8NPT	6	6
10	1-384-010038-2	HOSE ASM AIR 3/8X66,W/3/8 END	1	1
11	1-384-010038024	HOSE ASM AIR 3/8X24,W/3/8 END	4	2
12	1-384-010038030	HOSE ASM AIR 3/8X30,W/3/8 END **(NOT SHOWN)**	--	2
13	1-384-010038054	HOSE ASM AIR 3/8X54,W/3/8 END	2	2
14	1-384-010038060	HOSE ASM AIR 3/8X60,W/3/8 END	2	2
15	1-384-010038072	HOSE ASM AIR 3/8X72,W/3/8 END	4	4
16	1-384-010038084	HOSE ASM AIR 3/8X84,W/3/8 END	4	2
17	1-384-010038090	HOSE ASM AIR 3/8X90,W/3/8 END	--	2
18	1-560-010002-03	PLUG, PIPE, 3/8NPTF	1	1
19	1-560-010002-04	PLUG, PIPE, 1/2NPT	7	7
20	1-560-010002-05	PLUG,PIPE, 3/4-14NPTF	1	1
21	1-833-010002	TUBING NYLON 3/8 OD	AR	AR
22	1-833-010003	TUBING NYLON 1/2 OD	8	8
23	108801	GLAD HAND-RED-AIR	1	1
24	108802	GLAD HAND-BLUE-AIR	1	1
25	114586	ABS KIT WABCO 4S/2MTRI/SPREAD **(SEE PAGE 1-92)**	1	1
26	163578	VALVE MINI BALL AIR 3/8NPT	2	2
27	171664	AIR TANK MODIFY BRKT **(NOT SHOWN)**	1	--
28	2081-8-6S	REDUCER 1/2NPT X 3/8NPT	2	2
29	2083-12-8S	NIPPLE 3/4NPTX1/2NPT	1	1
30	2083-8-8S	NIPPLE 1/2NPTX1/2NPT	2	2
31	2088-6-6S	ADAPTER 45 3/8MPTX3/8FPT	5	5
32	2089-6-6S	ADAPTER 90 3/8MPTX3/8FPT	2	2
33	2089-8-8S	ADAPTER 90 1/2MPTX1/2FPT	1	1
34	2092-6-6S	TEE,#6NPT,1MALE, 2 FEMALE	3	3
35	3-220-010004	COUPLER AIR FEMALE 3/8-18MPT	4	4

Eastern Mower Sales Inc

Air Brake System - 855E

ITEM	PART NO.	DESCRIPTION	QTY.	
36	3-780-010002	TANK AIR 9.5X22.5 .5NPT PORTS	3	3
37	56D4	COCK,DRAIN AIR TANK VEL036019	2	3
38	758-181	VALVE TASK 4 PORT	1	1
39	138962	AXLE WLDMT 2516SPG 79 TIS	REF	REF

Eastern Wrecker Sales Inc

Table provided for general use.

NOTES:

Eastern Wrecker Sales Inc

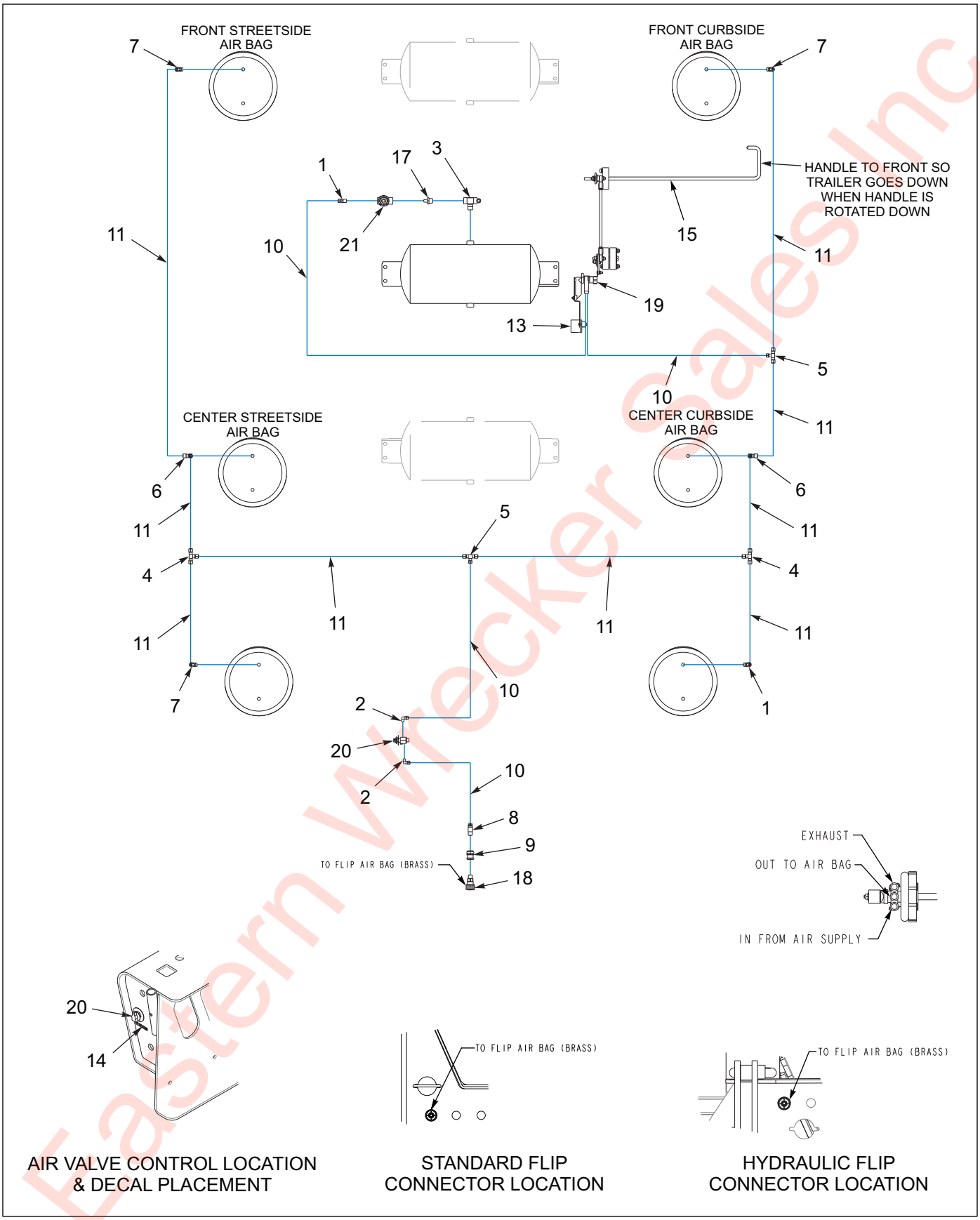

Figure 1-29: Air Ride Suspension - 855E

Eastern Wrecker Sales Inc

Air Ride Suspension - 855E

ITEM	PART NO.	DESCRIPTION	QTY.
	198484	FRAME ASSY 855E 26' GROTE	
	198485	FRAME ASSY 855E 23-1/2 GROTE	
	198486	FRAME ASSY 855E 27-1/2' GROTE	
	198487	FRAME ASSY 855E 25' GROTE	
	198488	FRAME ASSY 855E 25' GALV	
	198489	FRAME ASSY 855E 26' GALV	
	198490	FRAME ASSY 855E 23-1/2 GALV	
	198491	FRAME ASSY 855E 27-1/2' GALV	
	198509	FRAME ASSY 855E-26 HYD FLIP	
	198510	FRAME ASSY 855E-26 HYD GALV	
	198511	FRAME ASSY 855E-25 HYD GALV	
	198512	FRAME ASSY 855E-25 HYD FLIP	
	198513	FRAME ASSY 855E 27-1/2 HYD FLP	
	198514	FRAME ASSY 855E 27-1/2 HYD GAL	
1	1-297-010007-05	FITTING, AIR, 1/4TUBEX1/4NPT	1
2	1-297-010008-05	FITTING,AIR 90 1/4TUBEX1/8NPT	2
3	1-297-010009-04	FITTING,AIR, PIPE TEE 1/2	REF
4	1-297-010010-03	FITTING,AIR, UNION TEE 3/8	2
5	1-297-010010-04	FITTING,AIR,UN/TEE3/8X3/8X1/4	2
6	1-297-010011-04	FITTING,AIR,M/RUN TEE 3/8-1/4	2
7	1-297-010013-11	FITTING,AIR,45 M/ELB3/8T-1/4P	4
8	1-297-010013-12	FITTING AIR 45 M/ELB3/8TX3/8P	1
9	1-297-010022-03	FITTING,AIR ANCHR CPLG, 3/8NPT	1
10	1-833-010001	TUBING NYLON 1/4 OD	15
11	1-833-010002	TUBING NYLON 3/8 OD	34
12	102732	AIR CONTROL KIT **(ITEMS 13, 19, & 21) (SEE PAGE 1-93)**	1
13	111021	KIT SRK-167 NEWAY 952-50-001	REF
14	168973	DECAL FLIP AXLE AIR BAGS	1
15	194425	ROD HEIGHT CTRL 835	1
16	-----	855E WELDMENT **(NOT SHOWN)**	1
17	2083-8-4S	NIPPLE HEX 1/2PIPE - 1/4PIPE	1
18	3-220-010004	COUPLER AIR FEMALE 3/8-18MPT **(NOT SHOWN)**	1
19	900 54 007	HEIGHT CONTROL VALVE N	REF
20	900-54-088	VALVE, MANUAL OPERATED	1
21	905-54-107	BRAKE PROTECTION VALVE	REF

Eastern Trailer Sales Inc

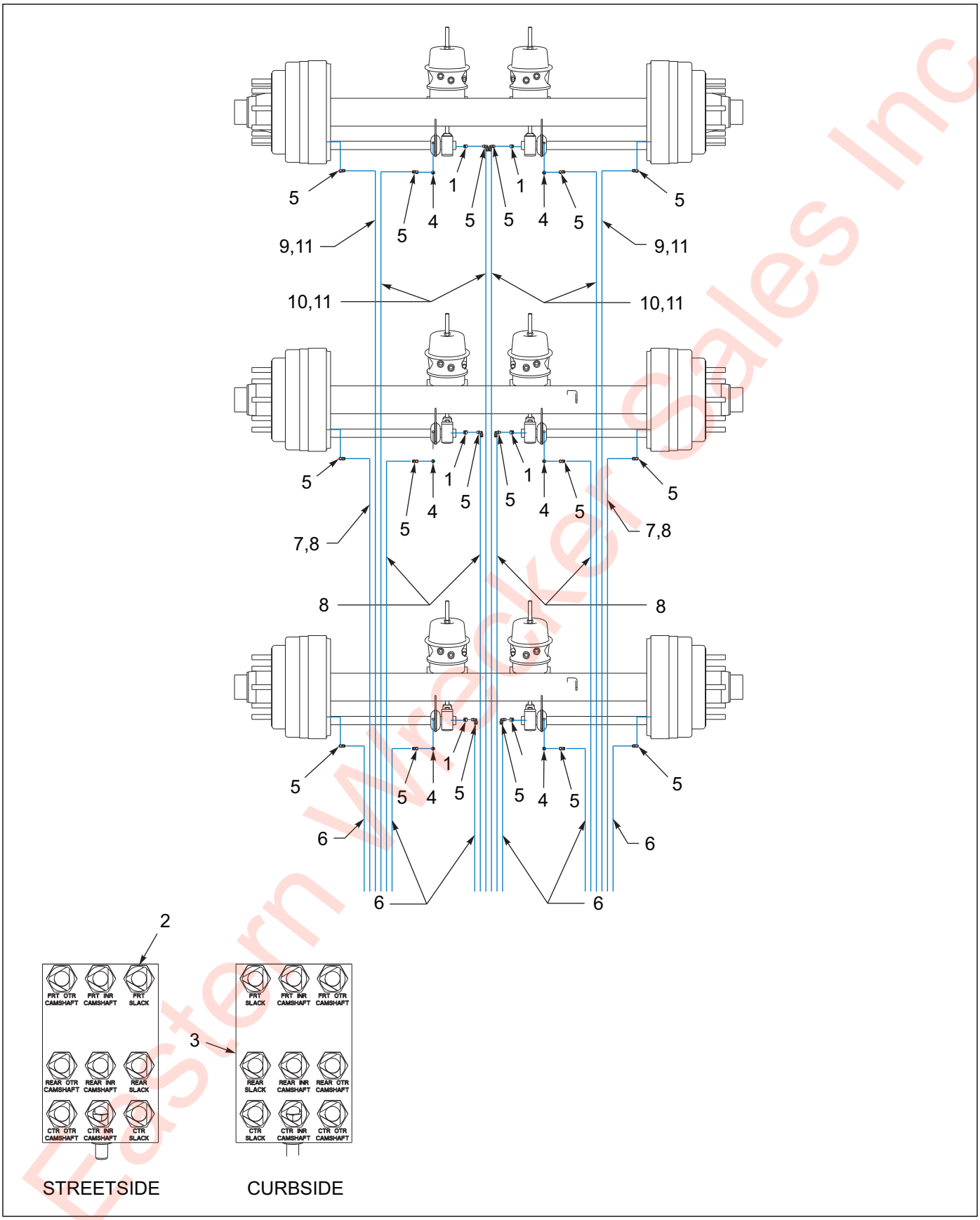

Figure 1-30: Grease System - 855E

Eastern Wrecker Sales Inc

Grease System - 855E

ITEM	PART NO.	DESCRIPTION	QTY.	
	198484	FRAME ASSY 855E 26' GROTE	*	
	198485	FRAME ASSY 855E 23-1/2 GROTE	*	
	198486	FRAME ASSY 855E 27-1/2' GROTE	*	
	198489	FRAME ASSY 855E 26' GALV	*	
	198490	FRAME ASSY 855E 23-1/2 GALV	*	
	198491	FRAME ASSY 855E 27-1/2' GALV	*	
	198509	FRAME ASSY 855E-26 HYD FLIP	*	
	198510	FRAME ASSY 855E-26 HYD GALV	*	
	198513	FRAME ASSY 855E 27-1/2 HYD FLP	*	
	198514	FRAME ASSY 855E 27-1/2 HYD GAL	*	
	198487	FRAME ASSY 855E 25' GROTE		*
	198488	FRAME ASSY 855E 25' GALV		*
	198511	FRAME ASSY 855E-25 HYD GALV		*
	198512	FRAME ASSY 855E-25 HYD FLIP		*
1	101528	ELBOW,BRASS PIPE STREET	6	6
2	142545	NUT 7/16 FOR BULKHEAD	18	18
3	142553	DECAL, GREASE TRL U/C	2	2
4	202094	ADAPTER 5/16--18X1/8NPTF	6	6
5	202099	FITTING GREASE 90 SWIV PTC 1/8	18	18
6	202102	HOSE ASSY GREASE 1/8 X 36	6	6
7	202111	HOSE ASSY GREASE 1/8 X 102	2	--
8	202112	HOSE ASSY GREASE 1/8 X 118	4	6
9	202118	HOSE ASSY GREASE 1/8 X 156	2	--
10	202119	HOSE ASSY GREASE 1/8 X 162	4	--
11	202122	HOSE ASSY GREASE 1/8 X 180	--	6

Eastern Wrecker Sales Inc

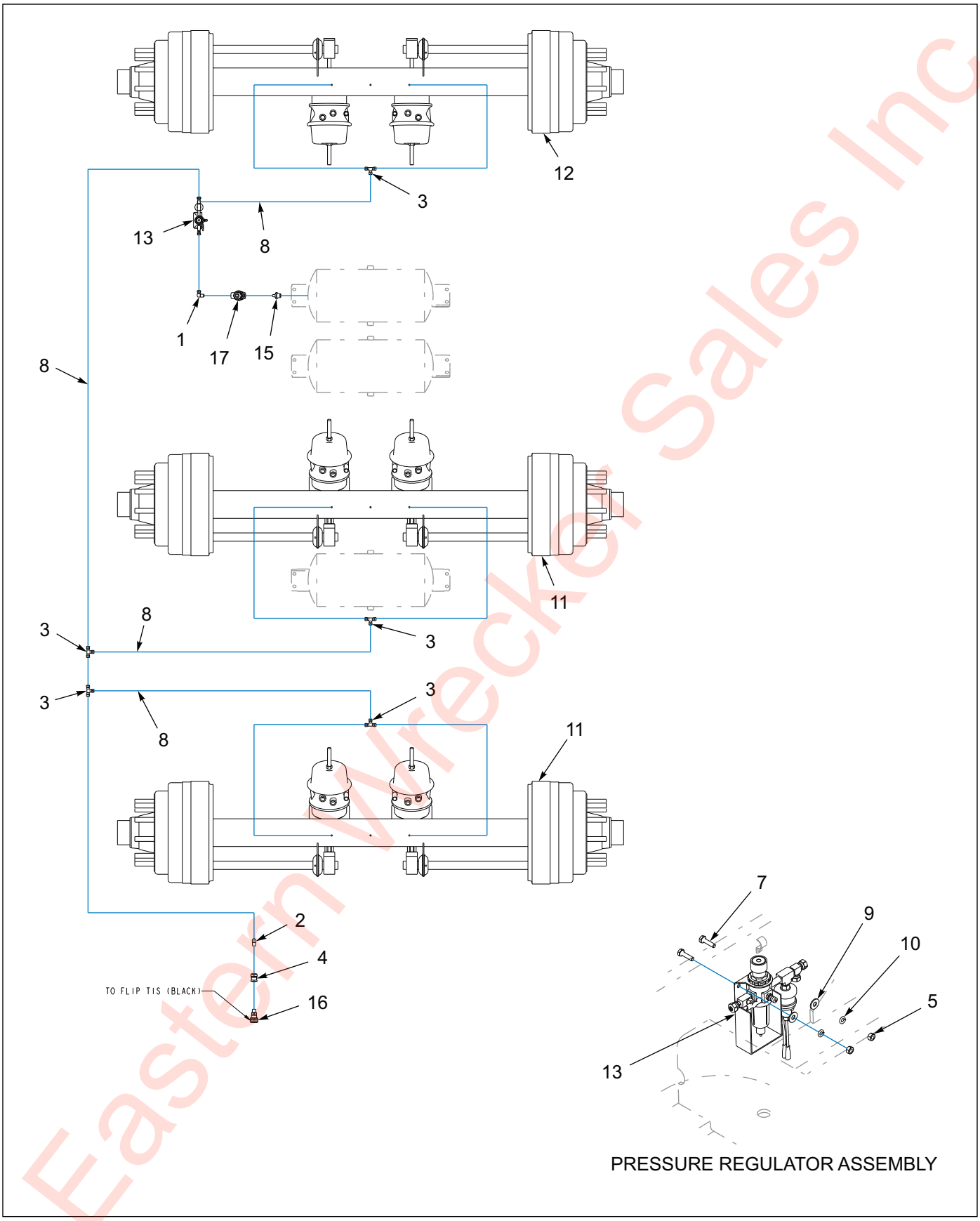

Figure 1-31: Tire Inflation System - 855E

Eastern Wrecker Sales Inc

Tire Inflation System - 855E

ITEM	PART NO.	DESCRIPTION	QTY.
	198484	FRAME ASSY 855E 26' GROTE	
	198485	FRAME ASSY 855E 23-1/2 GROTE	
	198486	FRAME ASSY 855E 27-1/2' GROTE	
	198487	FRAME ASSY 855E 25' GROTE	
	198488	FRAME ASSY 855E 25' GALV	
	198489	FRAME ASSY 855E 26' GALV	
	198490	FRAME ASSY 855E 23-1/2 GALV	
	198491	FRAME ASSY 855E 27-1/2' GALV	
	198509	FRAME ASSY 855E-26 HYD FLIP	
	198510	FRAME ASSY 855E-26 HYD GALV	
	198511	FRAME ASSY 855E-25 HYD GALV	
	198512	FRAME ASSY 855E-25 HYD FLIP	
	198513	FRAME ASSY 855E 27-1/2 HYD FLP	
	198514	FRAME ASSY 855E 27-1/2 HYD GAL	
1	1-297-010008-07	FITTING AIR 90 1/4TUBEX1/4NPT	REF
2	1-297-010008-09	FITTING,AIR 90 1/4TUBEX3/8NPT	REF
3	1-297-010010-01	FITTING,AIR,UNION TEE 1/4	REF
4	1-297-010022-03	FITTING,AIR ANCHR CPLG, 3/8NPT	REF
5	1-512-010007-05	NUT, HEX 1/4-20	REF
6	1-560-010002-04	PLUG, PIPE, 1/2NPT	REF
7	1-654-010047-06	SCREW,HX CP 1/4-20UNCX1 GR5	REF
8	1-833-010001	TUBING NYLON 1/4 OD	REF
9	1-861-010032-07	WASHER,FLAT 1/4 ZP	REF
10	1-861-010034-09	WASHER, LKG HLCL SPR, 1/4	REF
11	138962	AXLE WLDMT 2516SPG 79 TIS	REF
12	142891	AXLE WLDMT 2516 SPG 79FMT TIS	REF
13	157703	TIRE INFLATION SYSTEM 3AX **(SEE PAGE 1-208)**	REF
14	176474	HARNESS KIT TIRE INFL 800 **(NOT SHOWN)**	REF
15	2083-8-4S	NIPPLE HEX 1/2PIPE - 1/4PIPE	REF
16	3-220-010004	COUPLER AIR FEMALE 3/8-18MPT	REF
17	905-54-107	BRAKE PROTECTION VALVE	REF

Eastern Wrecker Sales Inc

Frame Assemblies - 855E HD

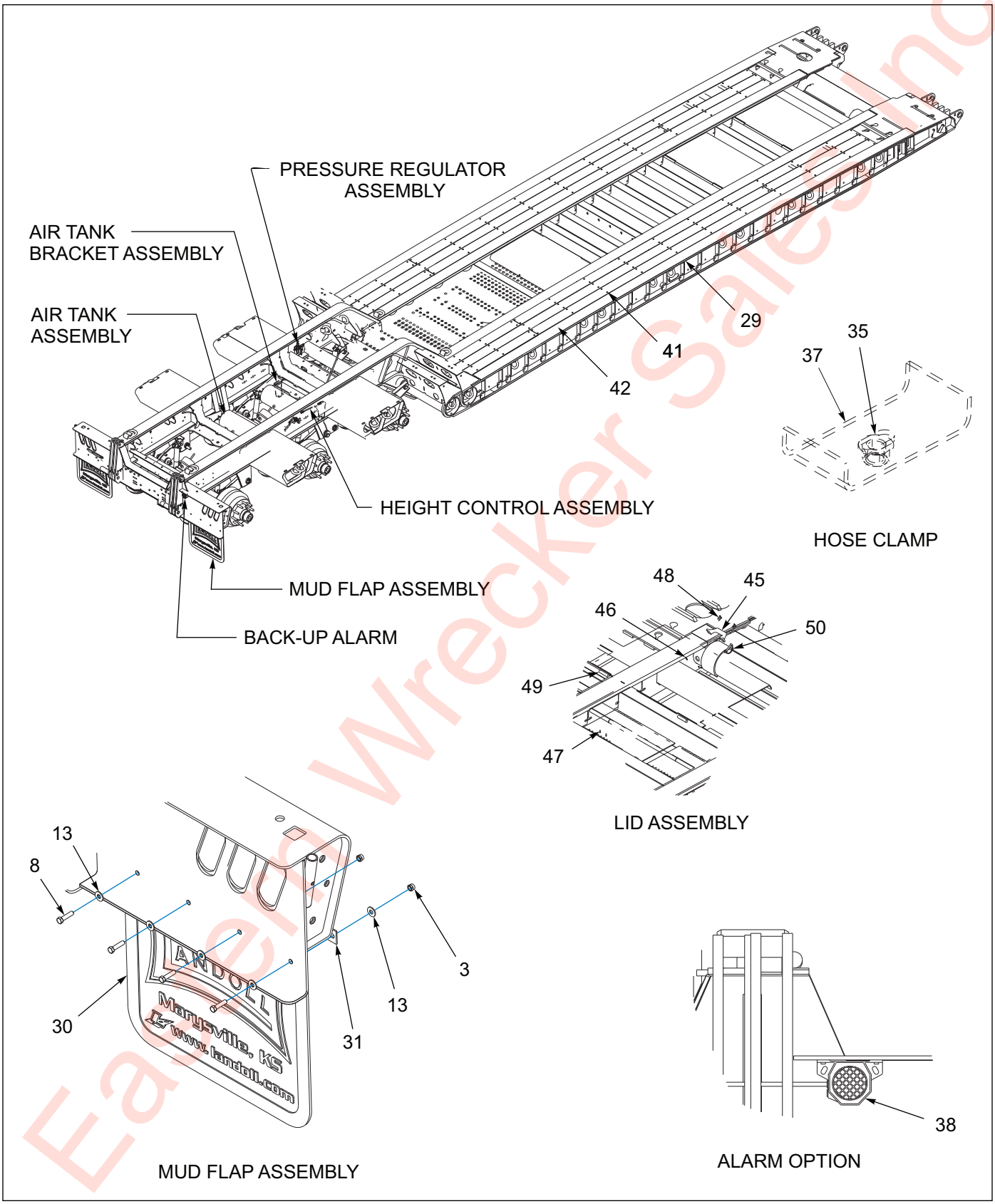

Figure 1-32: General Assembly - 855E HD (1 of 2)

Eaves Wrecker Sales Inc

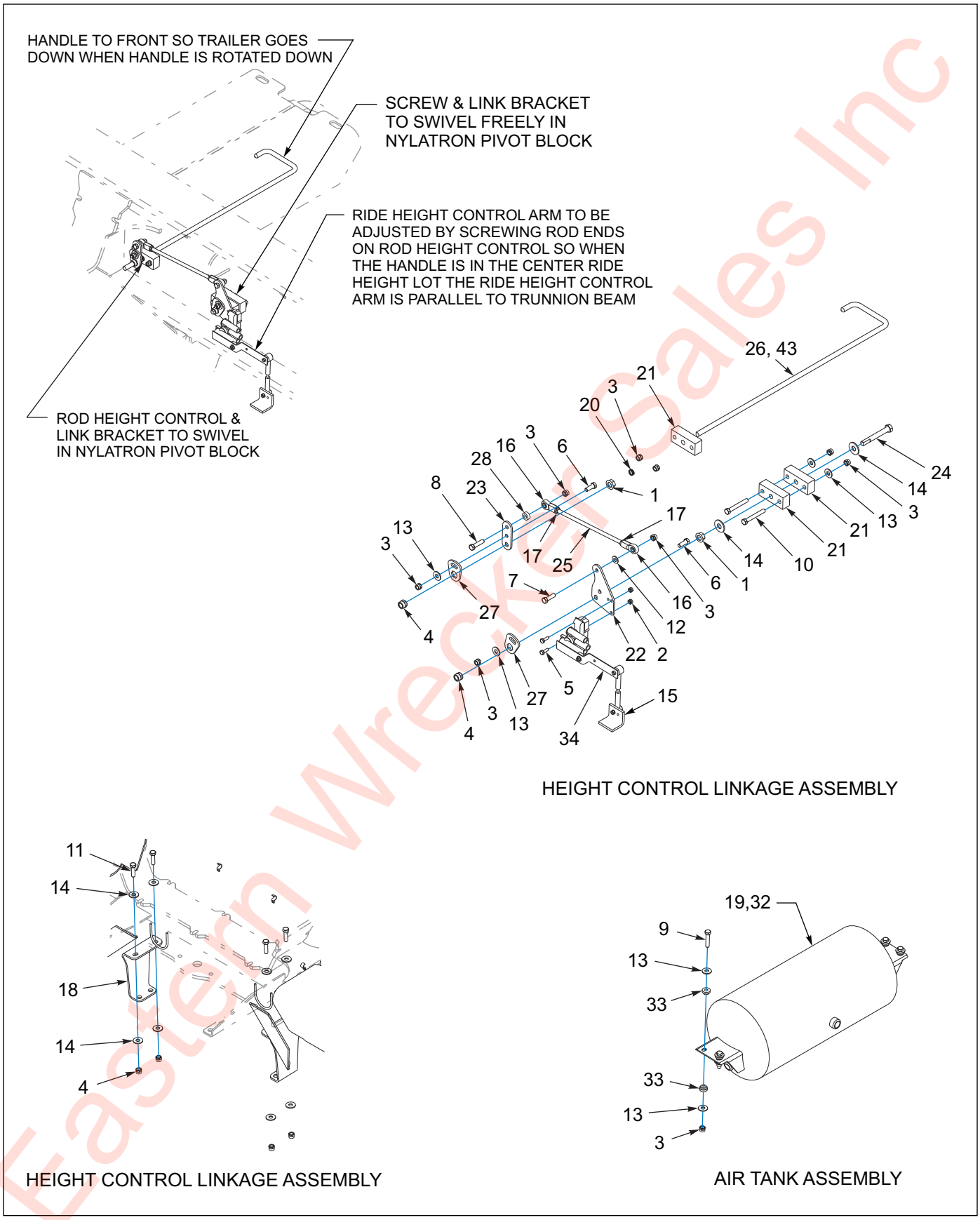

Figure 1-33: General Assembly - 855E HD (2 of 2)

Eastern Wrecker Sales Inc

General Assembly - 855E HD

ITEM	PART NO.	DESCRIPTION	QTY.		
	198492	FRAME ASSY 855EHD 26' GROTE	*		
	198494	FRAME ASSY 855EHD 26' XTR XMBR	*		
	198515	FRAME ASSY 855EHD XTR MBRSHDFP	*		
	198516	FRAME ASSY 855EHD-26-54HYDFLIP	*		
	198519	FRAME ASSY 855EHD 26' 102" DSK		*	
	198520	FRAME ASSY 855EHD 26' 108" DSK		*	
	198493	FRAME ASSY855EHD25-1/2'60"SPC			*
1	1-510-010003-09	NUT,1/2-13 FLANGE HD,SERRATED	2	2	2
2	1-512-010005-01	NUT,HEX,SLFLKG GRB 1/4-20	2	2	2
3	1-512-010005-05	NUT, HEX, SLFLKG GRB 3/8-16	28	24	28
4	1-512-010005-09	NUT,HEX,SLFLKG, 1/2-13 GRB	6	6	2
5	1-654-010047-04	SCREW,HEX CAP,1/4-20X3/4 GR5	2	2	2
6	1-654-010051-05	SCREW,HEX CAP 3/8-16UNCX1 GR5	2	2	2
7	1-654-010051-06	SCREW,HEX CAP 3/8-16UNCX1-1/4	1	1	1
8	1-654-010051-07	SCREW,HEX CAP,3/8-16UNCX1-1/2	9	9	9
9	1-654-010051-08	SCREW,HEX CAP,3/8-16X1-3/4 G	12	8	12
10	1-654-010051-12	SCREW,HEX CAP,3/8-16UNCX2-3/4	2	2	2
11	1-654-010055-04	SCREW,HEX CAP,1/2-13UNCX1-3/4	4	--	4
12	1-861-010032-10	WASHER, FLAT 3/8" N ZP/CD	1	1	1
13	1-861-010032-11	WASHER, FLAT 3/8 W ZP/CD	44	36	44
14	1-861-010032-15	WASHER, FLAT 1/2 W ZP/CD	10	2	10
15	111021	KIT SRK-167 NEWAY 952-50-001	REF	REF	REF
16	123717	ROD END, BALL JOINT 3/8	2	2	2
17	123869	NUT HX JAM 3/8-24UNF GR2	2	2	2
18	163092	BRACKET AIR TANK TRL 855	2	--	2
19	171664	AIR TANK MODIFY BRKT	REF	REF	REF
20	174178	SPRING, COMP HGT CONTROL	1	1	1
21	194415	PIVOT BLOCK NYLATRON HC	3	3	3
22	194417	LINK VALVE HT CTRL 855	1	1	1
23	194418	LINK ROD HT CTRL 855	1	1	1
24	194419	SCREW PIVOT HEIGHT CONTROL	1	1	1
25	194424	ROD HEIGHT CONTROL 855	1	1	1
26	194425	ROD HEIGHT CTRL 835	1	1	1
27	194426	ANTI-ROTATION WASHER 3/8	2	2	2
28	194427	SPACER WASHER HC	1	1	1
29	-----	FRAME WELDMENT	REF	REF	REF
30	3-485-010001	FLAP, MUD 21 IN	2	2	2
31	3-762-010017	CLAMP MUD FLAP	2	2	2
32	3-780-010002	TANK AIR 9.5X22.5 .5NPT PORTS	REF	REF	REF
33	805-2	BUSHINGS, STEP	24	16	24
34	900 54 007	HEIGHT CONTROL VALVE N	REF	REF	REF
35	1-510-010001	NUT, 3/8-16 UNC FLANGE LOCK	1	1	1
36	1-796-010001	TIE WIRE 22 PLASTIC **(NOT SHOWN)**	5	5	5
37	103817	CLAMP,HOSE 660 U/C	1	1	1
38	117997	ALARM DB ADJ SMART BACKUP	REF	REF	REF
39	145499	PRESERVATIVE WOODGUARD **(NOT SHOWN)**	.50	.50	.50
40	3-201-010002	CONDUIT 3/8 PLASTIC FLEX **(NOT SHOWN)**	8	8	8
41	3-654-010129-2	SCREW,5/16X3ZP TORX FLOOR	AR	AR	AR
42	RWD39062	APITONG 2X5-7/8 NET S4S	AR	AR	AR

Eastern Wrecker Sales Inc

General Assembly - 855E HD

ITEM	PART NO.	DESCRIPTION	QTY.		
43	194849	ROD HEIGHT CTRL 855-108" **(USED ONLY W/ 198520)**	--	1	--
44	0011037	HANDLE, COVER	--	--	3
45	1-512-010003-06	NUT,HEX,SLFLKG W/NLY 10-24	--	--	12
46	1-654-010147-06	SCREW RDHD SLF/TPG #6-20X3/4	--	--	12
47	1-656-010003053	SCREW RD HD MACH 10-24X1	--	--	12
48	135181	BUSHING NYLATRON TOOLBOX	--	--	6
49	172905	PIN, 3/8X2 ROUND WIRE LOCK	--	--	3

Eastern Wrecker Sales Inc

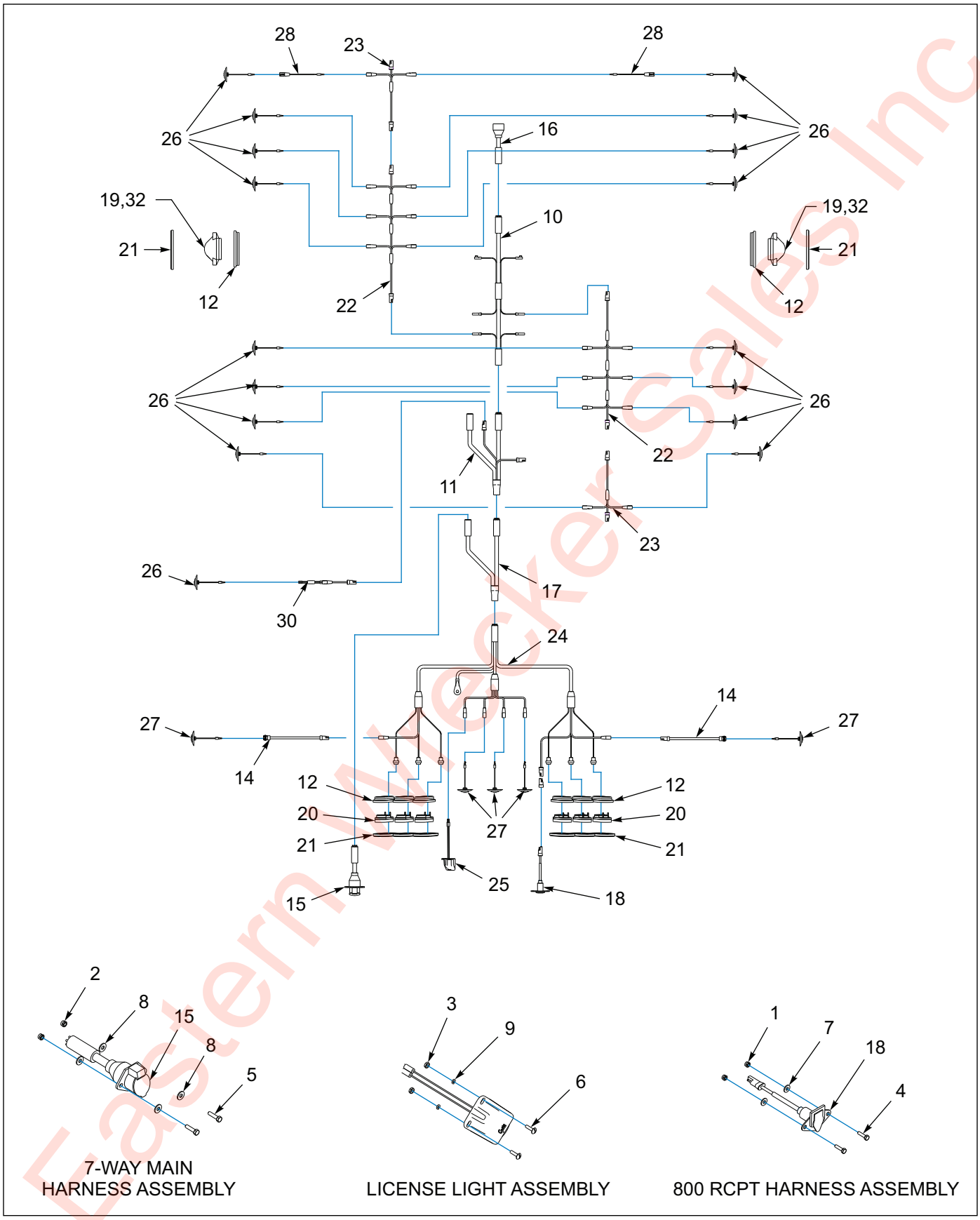

Figure 1-34: Electrical System - 855E HD

Eastern Wrecker Sales Inc

Electrical System - 855E HD

ITEM	PART NO.	DESCRIPTION	QTY.		
	198492	FRAME ASSY 855EHD 26' GROTE	*		
	198493	FRAME ASSY855EHD25-1/2'60"SPC	*		
	198494	FRAME ASSY 855EHD 26' XTR XMBR	*		
	198515	FRAME ASSY 855EHD XTR MBRSHDFP		*	
	198516	FRAME ASSY 855EHD-26-54HYDFLIP		*	
	198519	FRAME ASSY 855EHD 26' 102" DSK			*
	198520	FRAME ASSY 855EHD 26' 108" DSK			*
1	1-512-010005-01	NUT,HEX,SLFLKG GRB 1/4-20	2	2	2
2	1-512-010005-03	NUT HEX SLFLKG GRB 5/16-18	2	2	2
3	1-512-010007-03	NUT, HEX 10-24	2	2	2
4	1-654-010047-06	SCREW,HX CP 1/4-20UNCX1 GR5	2	2	2
5	1-654-010049-06	SCREW,H/CAP,5/16-18UNCX1-1/4	2	2	2
6	1-656-010003051	SCREW,RH HD MACH 10-24X3/4	2	2	2
7	1-861-010032-07	WASHER,FLAT 1/4 ZP	2	2	2
8	1-861-010032-09	WASHER, FLAT 5/16 W ZP/CD	4	4	4
9	1-861-010034-07	WASHER,LKG,HLCL SPR, NO 10	2	2	2
10	143102	HARNESS BED MAIN GROTE	1	1	1
11	143103	HARNESS ECHAIN GROTE	1	1	1
12	143114	GROMMET OVAL GROTE **(BEFORE 01/02/20)**	8	8	8
13	143123	GREASE DIELECTRIC 4 OZ TUBE **(NOT SHOWN)**	.25	.25	.25
14	144609	MARKER LAMP PIGTAIL HARNESS	2	2	2
15	146897	HARNESS 7WAY RECP REAR GROTE	1	1	1
16	146898	HARNESS 7WAY PLUG G/N GROTE	1	1	1
17	146929	HARNESS Y SPLITTER GROTE	1	1	1
18	150116	HARNESS ASSY RCPT 800	1	1	1
19	169410	LIGHT YEL MID TURN GROTE	2	--	--
20	179902	LIGHT S/T/T RED CLEAR LENS GRT **(BEFORE 01/02/20)**	6	6	6
20	213295	LIGHT S/T/T RED CLEAR LENS GRT **(AFTER 01/02/20)**	6	6	6
21	180570	COVER CHROME OBLONG GROM **(BEFORE 01/02/20)**	8	8	8
21	213296	COVER CHROME OBLONG GROM **(AFTER 01/02/20)**	8	8	8
22	187856	HARNESS MARKER MID DECK	2	2	2
23	187857	HARNESS MARKER ADDITION	2	2	2
24	187859	HARNESS BUMPER MICRONOVA GROTE	1	1	1
25	187860	LIGHT ASSY LICENSE LED GROTE	1	1	1
26	187863	LIGHT YEL LED.75CL/MK CLEAR CB	13	17	17
27	187864	LIGHT RED LED.75CL/MK CLEAR CB	5	5	5
28	191568	HARNESS MARKER LAMP MICRONOVA	2	2	--
29	-----	FRAME WLDMT 855E-26 **(NOT SHOWN)**	REF	REF	REF
30	200037	HARNESS ABS LIGHT SHORT	1	1	1
31	43029	HOSE WRAP AEROQUIP 1/4 **(NOT SHOWN)**	3	3	3
32	187868	LIGHT MID-TURN LED CLEAR LENS	--	2	2

Eastern Mower Sales Inc

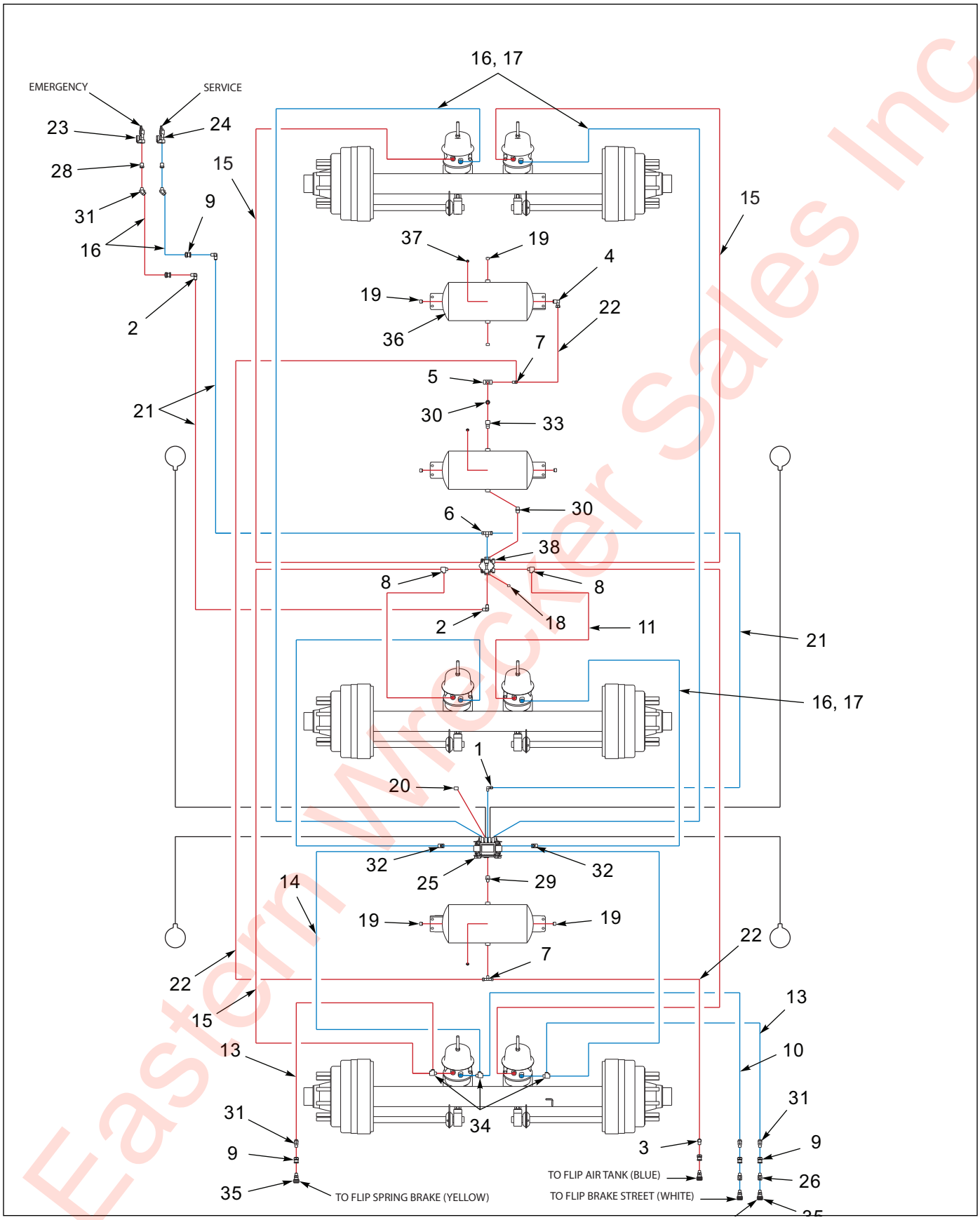

Figure 1-35: Air Brake System - 855E HD (1 of 2)

Eastern Wrecker Sales Inc

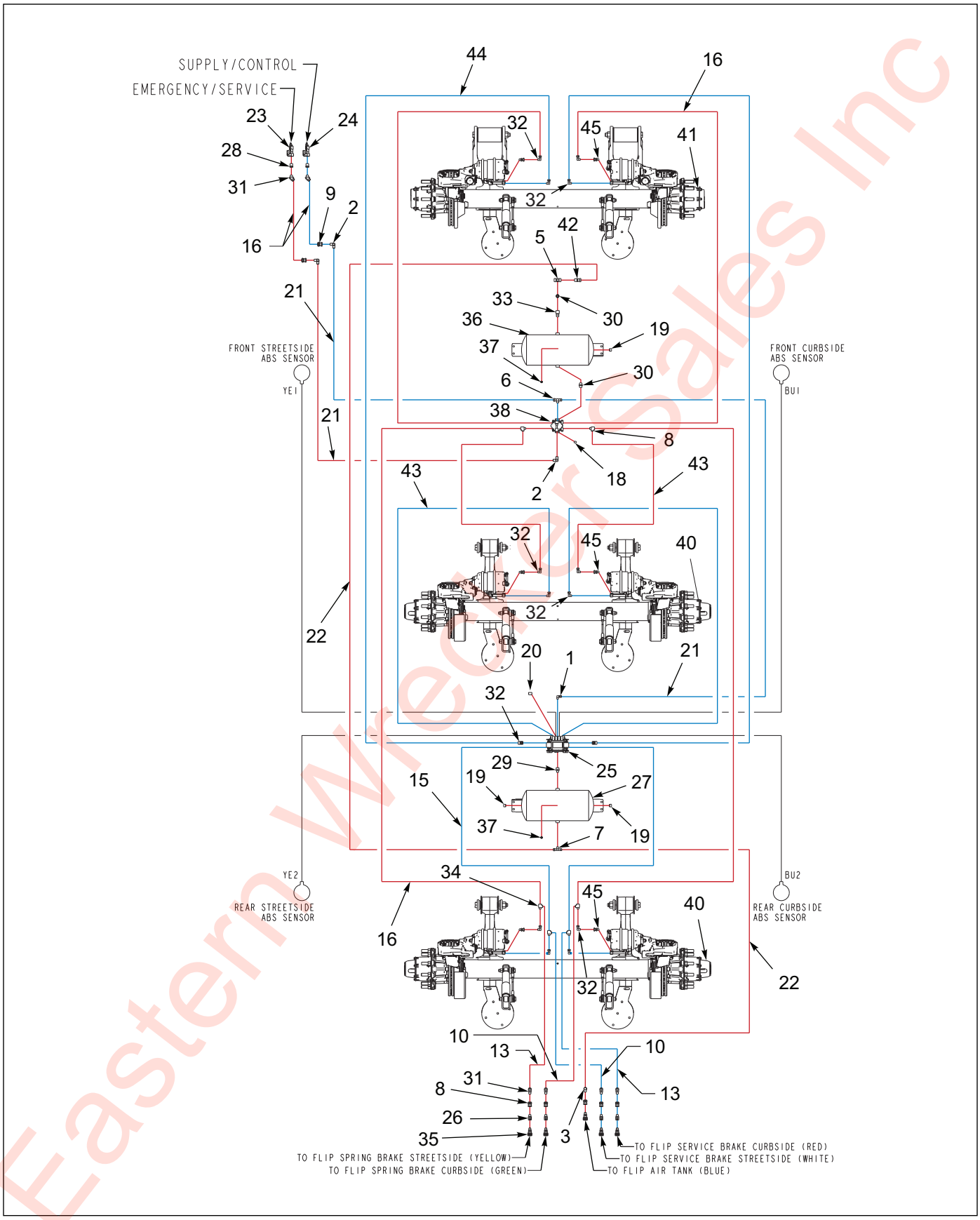

Figure 1-36: Air Brake System - 855E HD (2 of 2)

Eastern Wrecker Sales Inc

Air Brake System - 855E HD

ITEM	PART NO.	DESCRIPTION	QTY.		
	198492	FRAME ASSY 855EHD 26' GROTE	*		
	198494	FRAME ASSY 855EHD 26' XTR XMBR	*		
	198515	FRAME ASSY 855EHD XTR MBRSHDFP	*		
	198516	FRAME ASSY 855EHD-26-54HYDFLIP	*		
	198493	FRAME ASSY855EHD25-1/2'60"SPC		*	
	198519	FRAME ASSY 855EHD 26' 102" DSK			*
	198520	FRAME ASSY 855EHD 26' 108" DSK			*
1	1-297-010008-18	FITTING,AIR 90 3/8TUBEX1/4NPT	1	1	1
2	1-297-010008-20	FITTING,AIR 90 3/8TUBEX3/8NPT	3	3	3
3	1-297-010008-23	FITTING,AIR 90 1/2TUBEX3/8NPT	1	1	1
4	1-297-010008-24	FITTING,AIR 90 1/2TUBEX1/2NPT	1	1	--
5	1-297-010009-04	FITTING,AIR, PIPE TEE 1/2	1	1	1
6	1-297-010015-07	FITTING,AIR,BR TEE 3/8T-3/8P	1	1	1
7	1-297-010015-11	FITTING,AIR,BR TEE 1/2T-1/2P	2	2	1
8	1-297-010018-03	FITTING,3/8 BRASS PIPE,ST TEE	2	2	2
9	1-297-010022-03	FITTING,AIR ANCHR CPLG, 3/8NPT	6	6	7
10	1-384-010038-2	HOSE ASM AIR 3/8X66,W/3/8 END	1	1	2
11	1-384-010038024	HOSE ASM AIR 3/8X24,W/3/8 END	4	2	--
12	1-384-010038030	HOSE ASM AIR 3/8X30,W/3/8 END **(NOT SHOWN)**	--	2	--
13	1-384-010038054	HOSE ASM AIR 3/8X54,W/3/8 END	2	2	2
14	1-384-010038060	HOSE ASM AIR 3/8X60,W/3/8 END	2	2	--
15	1-384-010038072	HOSE ASM AIR 3/8X72,W/3/8 END	4	4	2
16	1-384-010038084	HOSE ASM AIR 3/8X84,W/3/8 END	4	2	6
17	1-384-010038090	HOSE ASM AIR 3/8X90,W/3/8 END	--	2	--
18	1-560-010002-03	PLUG, PIPE, 3/8NPTF	1	1	1
19	1-560-010002-04	PLUG, PIPE, 1/2NPT	7	7	3
20	1-560-010002-05	PLUG,PIPE, 3/4-14NPTF	1	1	1
21	1-833-010002	TUBING NYLON 3/8 OD	AR	AR	AR
22	1-833-010003	TUBING NYLON 1/2 OD	8	8	8
23	108801	GLAD HAND-RED-AIR	1	1	1
24	108802	GLAD HAND-BLUE-AIR	1	1	1
25	114586	ABS KIT WABCO 4S/2MTRI/SPREAD **(SEE PAGE 1-92)**	1	1	1
26	163578	VALVE MINI BALL AIR 3/8NPT	2	2	4
27	171664	AIR TANK MODIFY BRKT	1	--	1
28	2081-8-6S	REDUCER 1/2NPT X 3/8NPT	2	2	2
29	2083-12-8S	NIPPLE 3/4NPTX1/2NPT	1	1	1
30	2083-8-8S	NIPPLE 1/2NPTX1/2NPT	2	2	2
31	2088-6-6S	ADAPTER 45 3/8MPTX3/8FPT	5	5	6
32	2089-6-6S	ADAPTER 90 3/8MPTX3/8FPT	2	2	14
33	2089-8-8S	ADAPTER 90 1/2MPTX1/2FPT	1	1	1
34	2092-6-6S	TEE,#6NPT,1MALE, 2 FEMALE	3	3	4
35	3-220-010004	COUPLER AIR FEMALE 3/8-18MPT	4	4	5
36	3-780-010002	TANK AIR 9.5X22.5 .5NPT PORTS	3	3	1
37	56D4	COCK,DRAIN AIR TANK VEL036019	2	3	2
38	758-181	VALVE TASK 4 PORT	1	1	1
39	138956	AXLE 79 16.5X7SPG BK 25 TIS **(SEE PAGE 1-98)**	REF	REF	--
40	180757	AXLE,79",DISK,25K,TIS,FMT,9"RD	--	--	REF
41	180768	AXLE,79",DISK,25K,TIS,9"RIDE	--	--	REF
42	1-297-010007-16	FITTING AIR 1/2TUBEX1/2 NPT	--	--	1

Eastern Wrecker Sales Inc

Air Brake System - 855E HD

ITEM	PART NO.	DESCRIPTION	QTY.		
43	101003	HOSE ASM AIR 3/8X48,W/3/8 END	--	--	4
44	103738	HOSE ASM AIR 3/8X100,W/3/8 END	--	--	2
45	2045-6-6S	ADAPTER 3/8PIPETO3/8PIPE SWVL	--	--	6

Eastern Wrecker Sales Inc

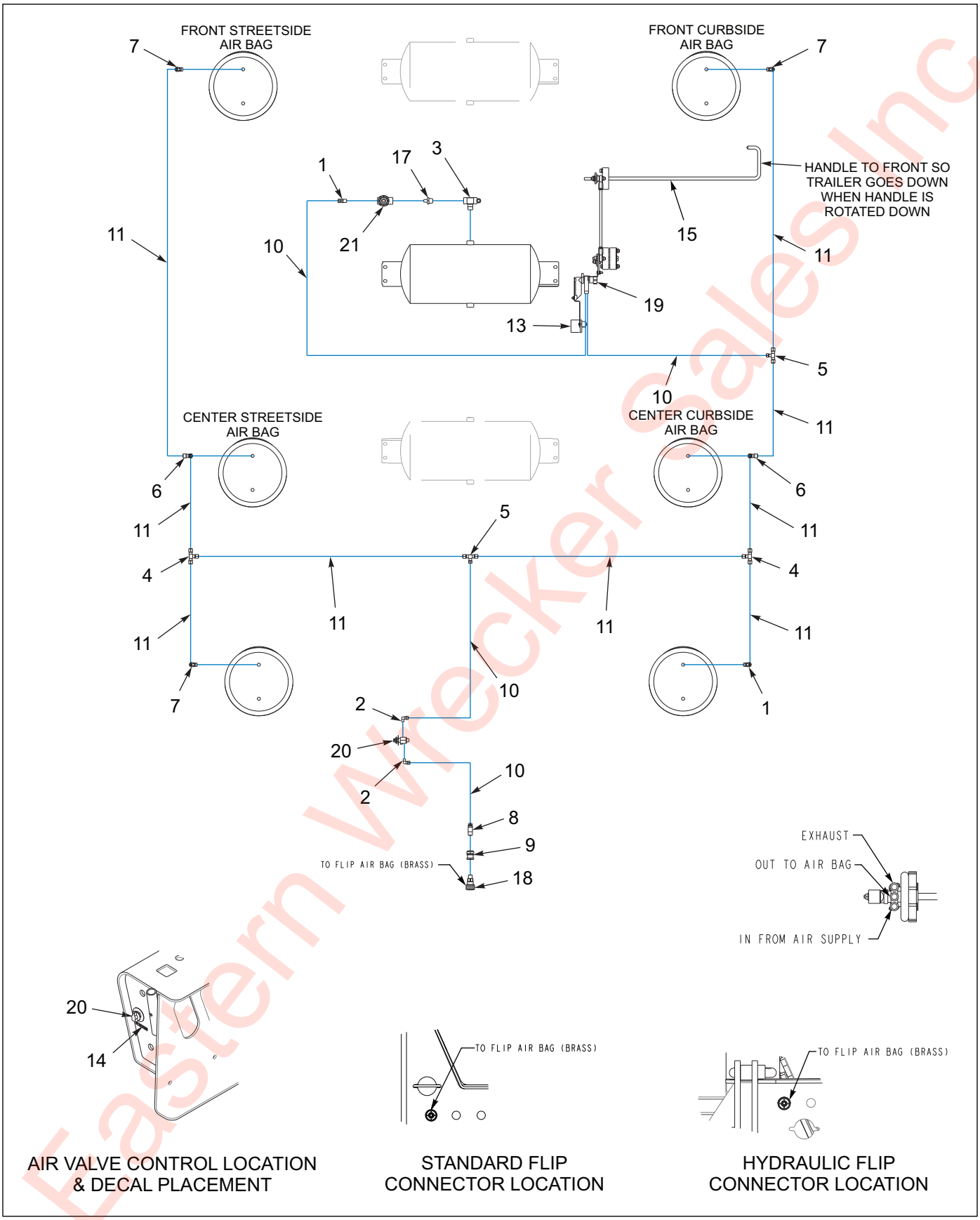

Figure 1-37: Air Ride Suspension - 855E HD

Eastern Wrecker Sales Inc

Air Ride Suspension - 855E HD

ITEM	PART NO.	DESCRIPTION	QTY.
	198492	FRAME ASSY 855EHD 26' GROTE	
	198493	FRAME ASSY855EHD25-1/2'60"SPC	
	198494	FRAME ASSY 855EHD 26' XTR XMBR	
	198515	FRAME ASSY 855EHD XTR MBRSHDFP	
	198516	FRAME ASSY 855EHD-26-54HYDFLIP	
	198519	FRAME ASSY 855EHD 26' 102" DSK	
	198520	FRAME ASSY 855EHD 26' 108" DSK	
1	1-297-010007-05	FITTING, AIR, 1/4TUBEX1/4NPT	1
2	1-297-010008-05	FITTING,AIR 90 1/4TUBEX1/8NPT	2
3	1-297-010009-04	FITTING,AIR, PIPE TEE 1/2	REF
4	1-297-010010-03	FITTING,AIR, UNION TEE 3/8	2
5	1-297-010010-04	FITTING,AIR,UN/TEE3/8X3/8X1/4	2
6	1-297-010011-04	FITTING,AIR,M/RUN TEE 3/8-1/4	2
7	1-297-010013-11	FITTING,AIR,45 M/ELB3/8T-1/4P	4
8	1-297-010013-12	FITTING AIR 45 M/ELB3/8TX3/8P	1
9	1-297-010022-03	FITTING,AIR ANCHR CPLG, 3/8NPT	1
10	1-833-010001	TUBING NYLON 1/4 OD	15
11	1-833-010002	TUBING NYLON 3/8 OD	34
12	102732	AIR CONTROL KIT **(ITEMS 13, 19, & 21) (SEE PAGE 1-93)**	1
13	111021	KIT SRK-167 NEWAY 952-50-001	REF
14	168973	DECAL FLIP AXLE AIR BAGS	1
15	194425	ROD HEIGHT CTRL 835 **(USED W/ 198492, 198493, 198494, 198515, 198516, & 198519)**	1
15	194849	ROD HEIGHT CTRL 855-108” **(USED W/ 198520)**	1
16	-----	855E WELDMENT **(NOT SHOWN)**	REF
17	2083-8-4S	NIPPLE HEX 1/2PIPE - 1/4PIPE	1
18	3-220-010004	COUPLER AIR FEMALE 3/8-18MPT **(NOT SHOWN)**	1
19	900 54 007	HEIGHT CONTROL VALVE N	REF
20	900-54-088	VALVE, MANUAL OPERATED	1
21	905-54-107	BRAKE PROTECTION VALVE	REF

Eastern Wrecker Sales Inc

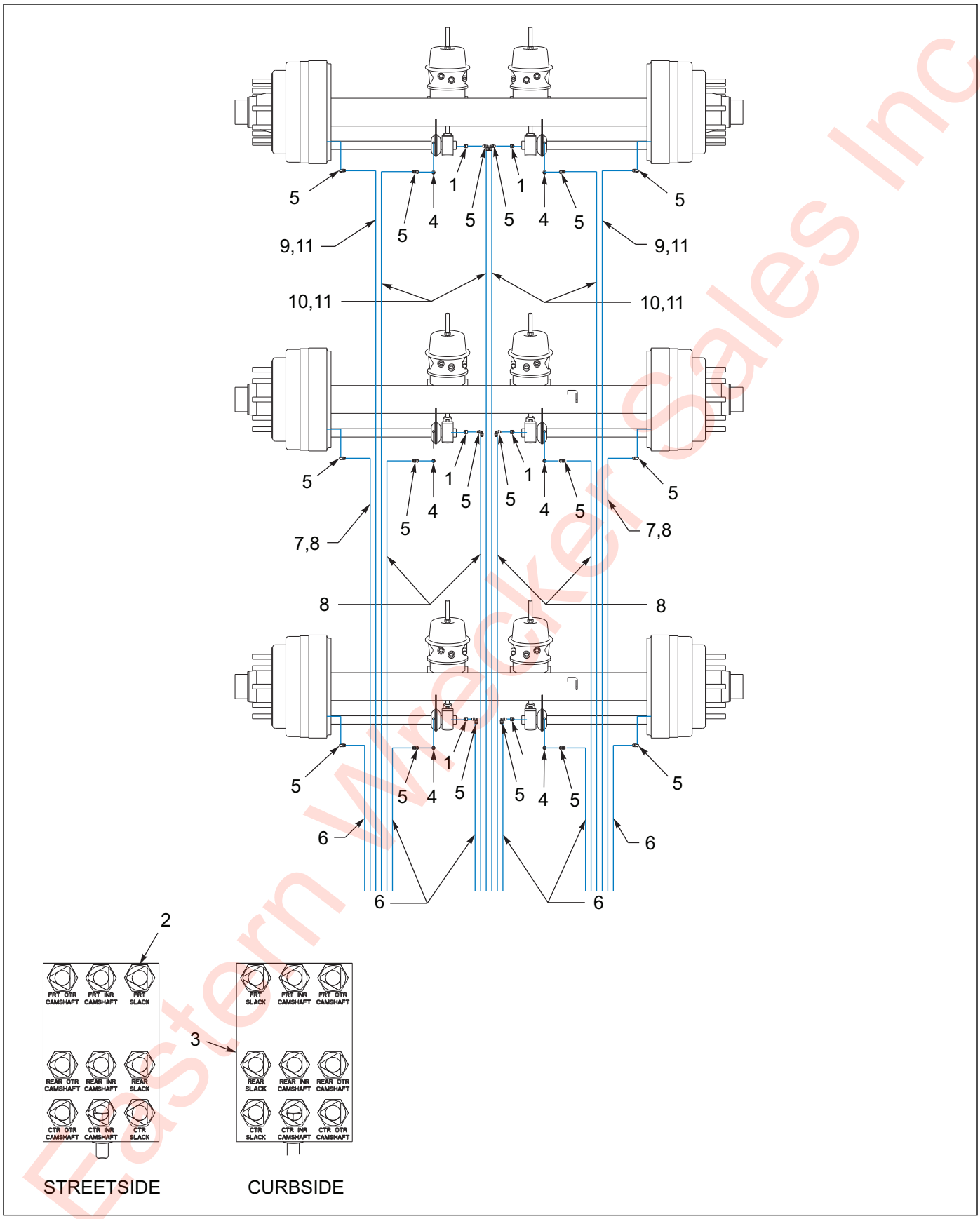

Figure 1-38: Grease System - 855E HD

Eastern Wrecker Sales Inc

Grease System - 855E HD

ITEM	PART NO.	DESCRIPTION	QTY.	
	198492	FRAME ASSY 855EHD 26' GROTE	*	
	198494	FRAME ASSY 855EHD 26' XTR XMBR	*	
	198515	FRAME ASSY 855EHD XTR MBRSHDFP	*	
	198516	FRAME ASSY 855EHD-26-54HYDFLIP	*	
	198519	FRAME ASSY 855EHD 26' 102" DSK	*	
	198520	FRAME ASSY 855EHD 26' 108" DSK	*	
	198493	FRAME ASSY855EHD25-1/2'60"SPC		*
1	101528	ELBOW,BRASS PIPE STREET	6	6
2	142545	NUT 7/16 FOR BULKHEAD	18	18
3	142553	DECAL, GREASE TRL U/C	2	2
4	202094	ADAPTER 5/16--18X1/8NPTF	6	6
5	202099	FITTING GREASE 90 SWIV PTC 1/8	18	18
6	202102	HOSE ASSY GREASE 1/8 X 36	6	6
7	202111	HOSE ASSY GREASE 1/8 X 102	2	--
8	202112	HOSE ASSY GREASE 1/8 X 118	4	6
9	202118	HOSE ASSY GREASE 1/8 X 156	2	--
10	202119	HOSE ASSY GREASE 1/8 X 162	4	--
11	202122	HOSE ASSY GREASE 1/8 X 180	--	6

Eastern Wrecker Sales Inc

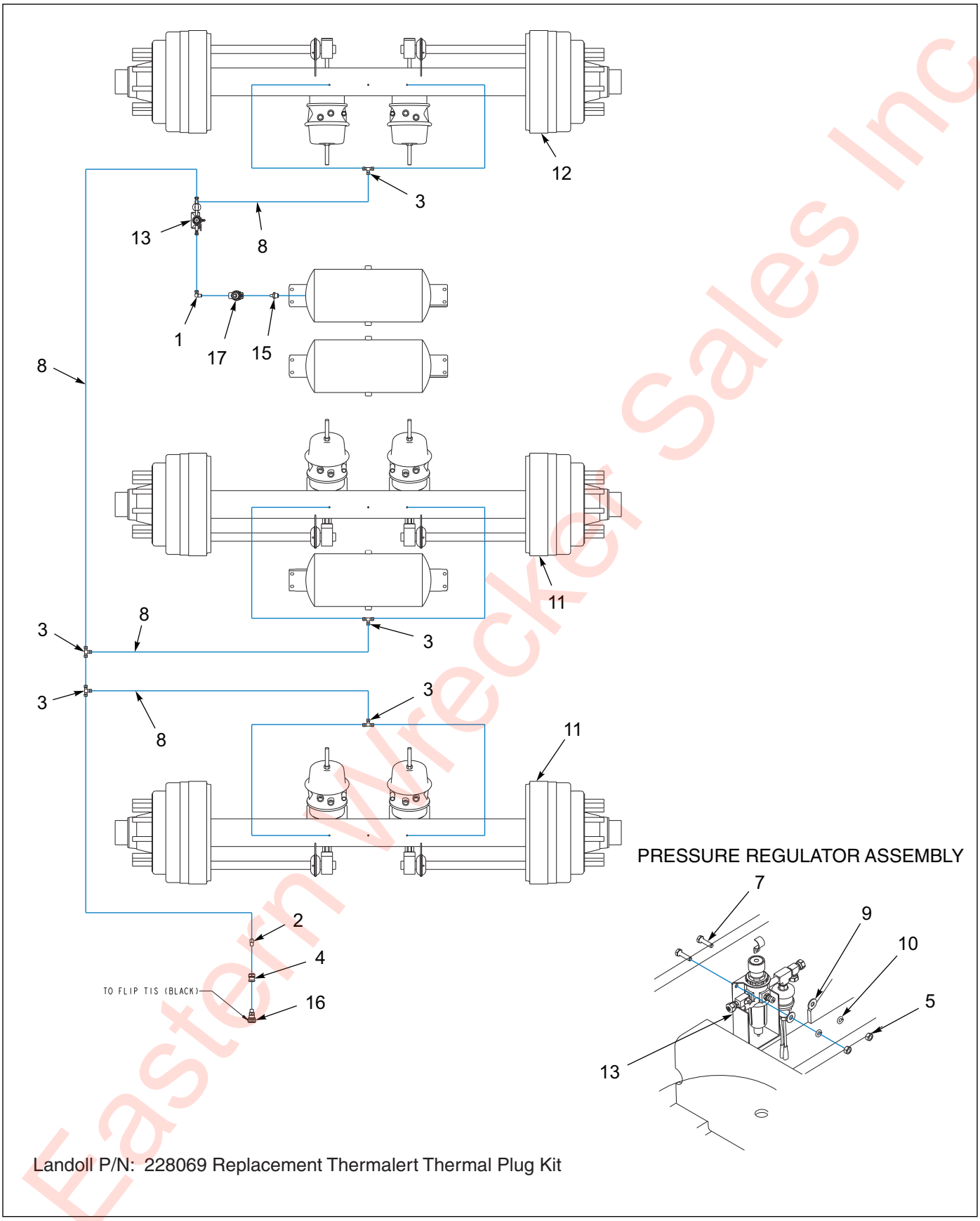

Eastern Wrecker Sales Inc

Figure 1-39: Tire Inflation System - 855E HD (1 of 2)

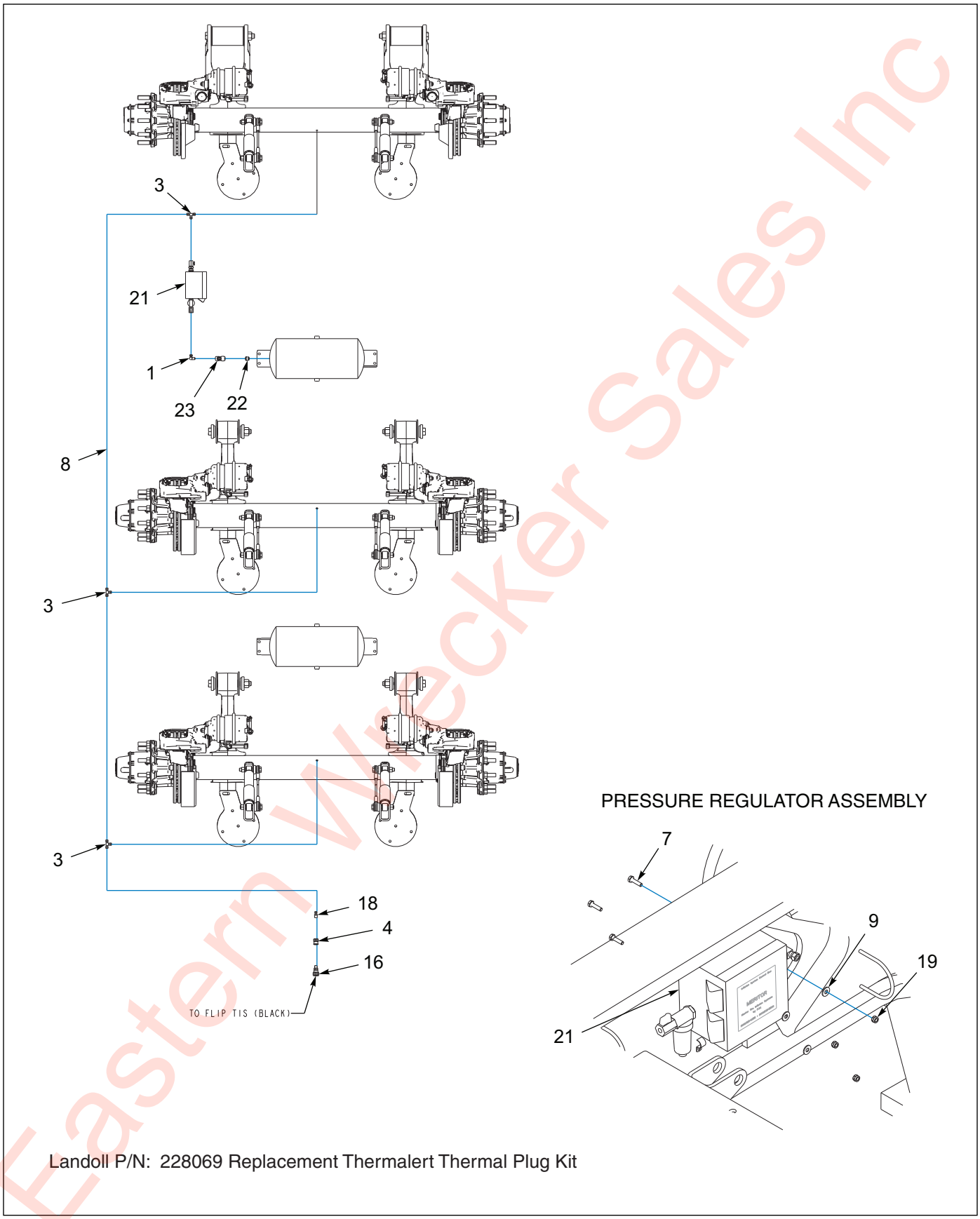

Figure 1-40: Tire Inflation System - 855E HD (2 of 2)

Eastern Wrecker Sales Inc

Tire Inflation System - 855E HD

ITEM	PART NO.	DESCRIPTION	QTY.	
	198492	FRAME ASSY 855EHD 26' GROTE		
	198493	FRAME ASSY855EHD25-1/2'60"SPC		
	198494	FRAME ASSY 855EHD 26' XTR XMBR		
	198515	FRAME ASSY 855EHD XTR MBRSHDFP		
	198516	FRAME ASSY 855EHD-26-54HYDFLIP		
	198519	FRAME ASSY 855EHD 26' 102" DSK		
	198520	FRAME ASSY 855EHD 26' 108" DSK		
1	1-297-010008-07	FITTING AIR 90 1/4TUBEX1/4NPT	REF	REF
2	1-297-010008-09	FITTING,AIR 90 1/4TUBEX3/8NPT	REF	--
3	1-297-010010-01	FITTING,AIR,UNION TEE 1/4	REF	REF
4	1-297-010022-03	FITTING,AIR ANCHR CPLG, 3/8NPT	REF	1
5	1-512-010007-05	NUT, HEX 1/4-20	REF	--
6	1-560-010002-04	PLUG, PIPE, 1/2NPT **(NOT SHOWN)**	REF	--
7	1-654-010047-06	SCREW,HX CP 1/4-20UNCX1 GR5	REF	3
8	1-833-010001	TUBING NYLON 1/4 OD	REF	REF
9	1-861-010032-07	WASHER,FLAT 1/4 ZP	REF	3
10	1-861-010034-09	WASHER, LKG HLCL SPR, 1/4	REF	--
11	138962	AXLE WLDMT 2516SPG 79 TIS	REF	--
12	142891	AXLE WLDMT 2516 SPG 79FMT TIS	REF	--
13	157703	TIRE INFLATION SYSTEM 3AX **(SEE PAGE 1-208)**	REF	--
14	176474	HARNESS KIT TIRE INFL 800 **(NOT SHOWN)**	REF	--
15	2083-8-4S	NIPPLE HEX 1/2PIPE - 1/4PIPE	REF	--
16	3-220-010004	COUPLER AIR FEMALE 3/8-18MPT	REF	1
17	905-54-107	BRAKE PROTECTION VALVE	REF	--
18	1-297-010007-06	FITTING,AIR,1/4TUBE TO 3/8NPT	--	1
19	1-512-010005-01	NUT,HEX,SLFLKG GRB 1/4-20	--	3
20	164052	HARNESS,60"BRANCH,WORK LIGHT **(NOT SHOWN)**	--	1
21	176076	THERMALERT TIS 3 AXLE SAF AXLE	--	1
22	1/2X3/8BUSH	BUSHING 1/2X3/8 BLACK IRON	--	1
23	168610	THERMALERT PRESS PROT VALVE	--	REF

Eastern Wrecker Sales Inc

Table provided for general use.

NOTES:

Eastern Wrecker Sales Inc

Frame Assemblies - 855E Paver

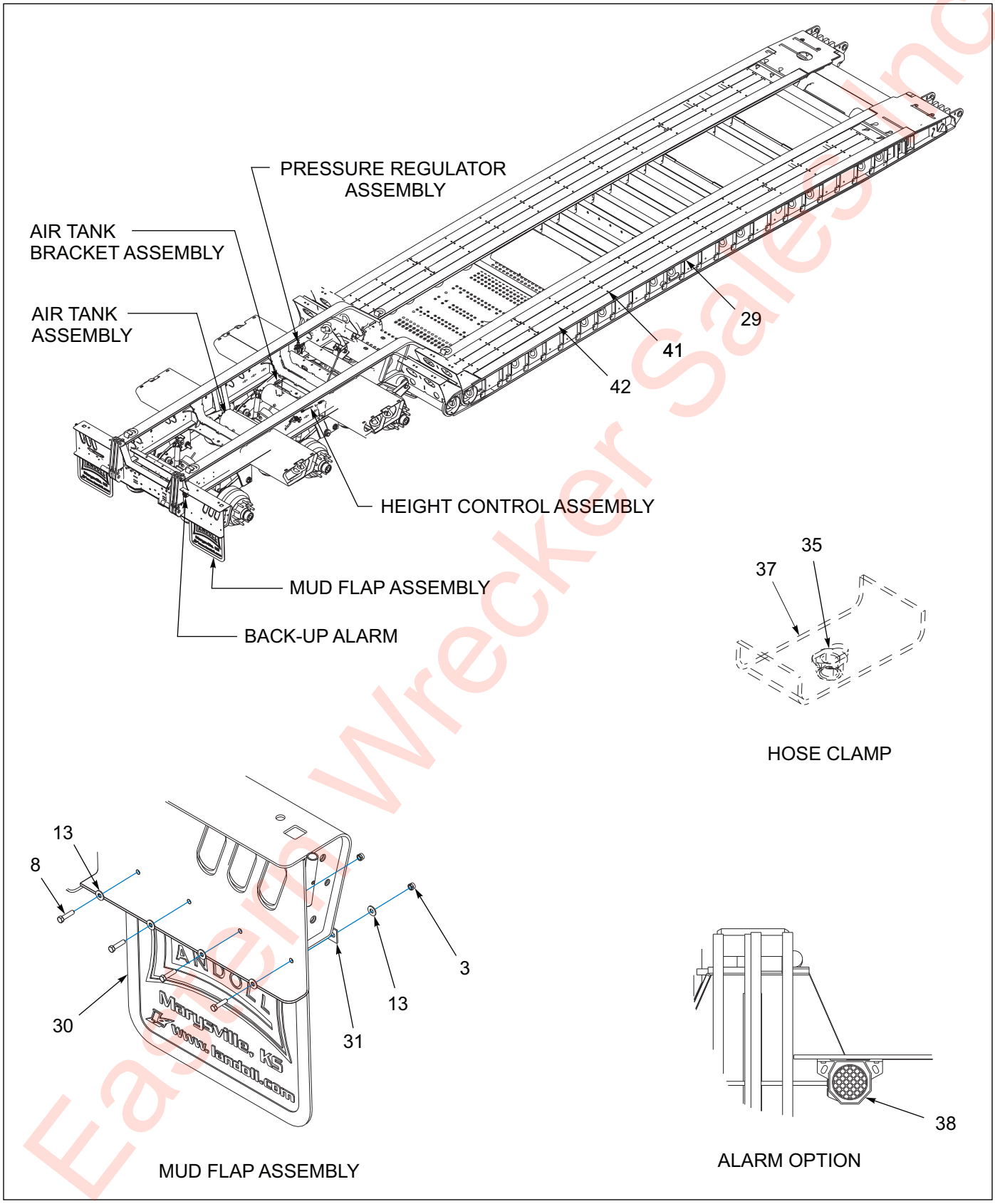

Figure 1-41: General Assembly - 855E Paver (1 of 2)

Eastern Wrecker Sales Inc

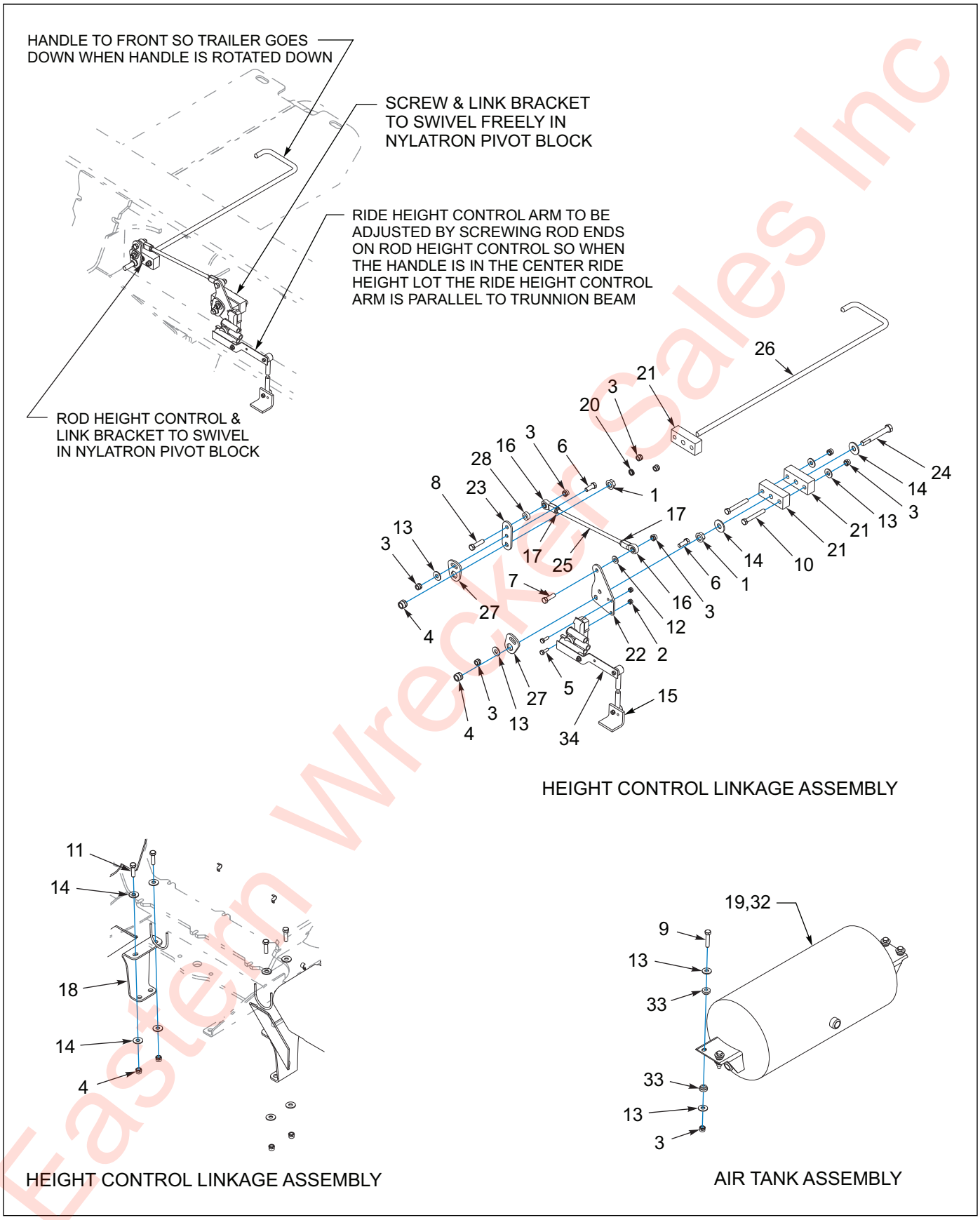

Figure 1-42: General Assembly - 855E Paver (2 of 2)

Eastern Wrecker Sales Inc

General Assembly - 855E Paver

ITEM	PART NO.	DESCRIPTION	QTY.
	198495	FRAME ASSY 855EPAV 23'	
	198496	FRAME ASSY 855EPAV 20-1/2	
	198497	FRAME ASSY 855EPAV-23' GALV	
	198517	FRAME ASSY 855EPAV-23'HYD FLIP	
1	1-510-010003-09	NUT,1/2-13 FLANGE HD,SERRATED	2
2	1-512-010005-01	NUT,HEX,SLFLKG GRB 1/4-20	2
3	1-512-010005-05	NUT, HEX, SLFLKG GRB 3/8-16	28
4	1-512-010005-09	NUT,HEX,SLFLKG, 1/2-13 GRB	6
5	1-654-010047-04	SCREW,HEX CAP,1/4-20X3/4 GR5	2
6	1-654-010051-05	SCREW,HEX CAP 3/8-16UNCX1 GR5	2
7	1-654-010051-06	SCREW,HEX CAP 3/8-16UNCX1-1/4	1
8	1-654-010051-07	SCREW,HEX CAP,3/8-16UNCX1-1/2	9
9	1-654-010051-08	SCREW,HEX CAP,3/8-16X1-3/4 G	12
10	1-654-010051-12	SCREW,HEX CAP,3/8-16UNCX2-3/4	2
11	1-654-010055-04	SCREW,HEX CAP,1/2-13UNCX1-3/4	4
12	1-861-010032-10	WASHER, FLAT 3/8" N ZP/CD	1
13	1-861-010032-11	WASHER, FLAT 3/8 W ZP/CD	44
14	1-861-010032-15	WASHER, FLAT 1/2 W ZP/CD	10
15	111021	KIT SRK-167 NEWAY 952-50-001	REF
16	123717	ROD END, BALL JOINT 3/8	2
17	123869	NUT HX JAM 3/8-24UNF GR2	2
18	163092	BRACKET AIR TANK TRL 855	2
19	171664	AIR TANK MODIFY BRKT	REF
20	174178	SPRING, COMP HGT CONTROL	1
21	194415	PIVOT BLOCK NYLATRON HC	3
22	194417	LINK VALVE HT CTRL 855	1
23	194418	LINK ROD HT CTRL 855	1
24	194419	SCREW PIVOT HEIGHT CONTROL	1
25	194424	ROD HEIGHT CONTROL 855	1
26	194425	ROD HEIGHT CTRL 835	1
27	194426	ANTI-ROTATION WASHER 3/8	2
28	194427	SPACER WASHER HC	1
29	-----	FRAME WELDMENT	REF
30	3-485-010001	FLAP, MUD 21 IN	2
31	3-762-010017	CLAMP MUD FLAP	2
32	3-780-010002	TANK AIR 9.5X22.5 .5NPT PORTS	REF
33	805-2	BUSHINGS, STEP	24
34	900 54 007	HEIGHT CONTROL VALVE N	REF
35	1-510-010001	NUT, 3/8-16 UNC FLANGE LOCK	1
36	1-796-010001	TIE WIRE 22 PLASTIC **(NOT SHOWN)**	5
37	103817	CLAMP,HOSE 660 U/C	1
38	117997	ALARM DB ADJ SMART BACKUP	REF
39	145499	PRESERVATIVE WOODGUARD **(NOT SHOWN)**	.5
40	3-201-010002	CONDUIT 3/8 PLASTIC FLEX **(NOT SHOWN)**	8
41	3-654-010129-2	SCREW,5/16X3ZP TORX FLOOR	AR
42	RWD39000	APITONG, 1-3/8 X 7.08	AR
43	RWD39062	APITONG 2X5-7/8 NET S4S	AR

Eastern Marker Sales Inc

Table provided for general use.

NOTES:

Eastern Wrecker Sales Inc

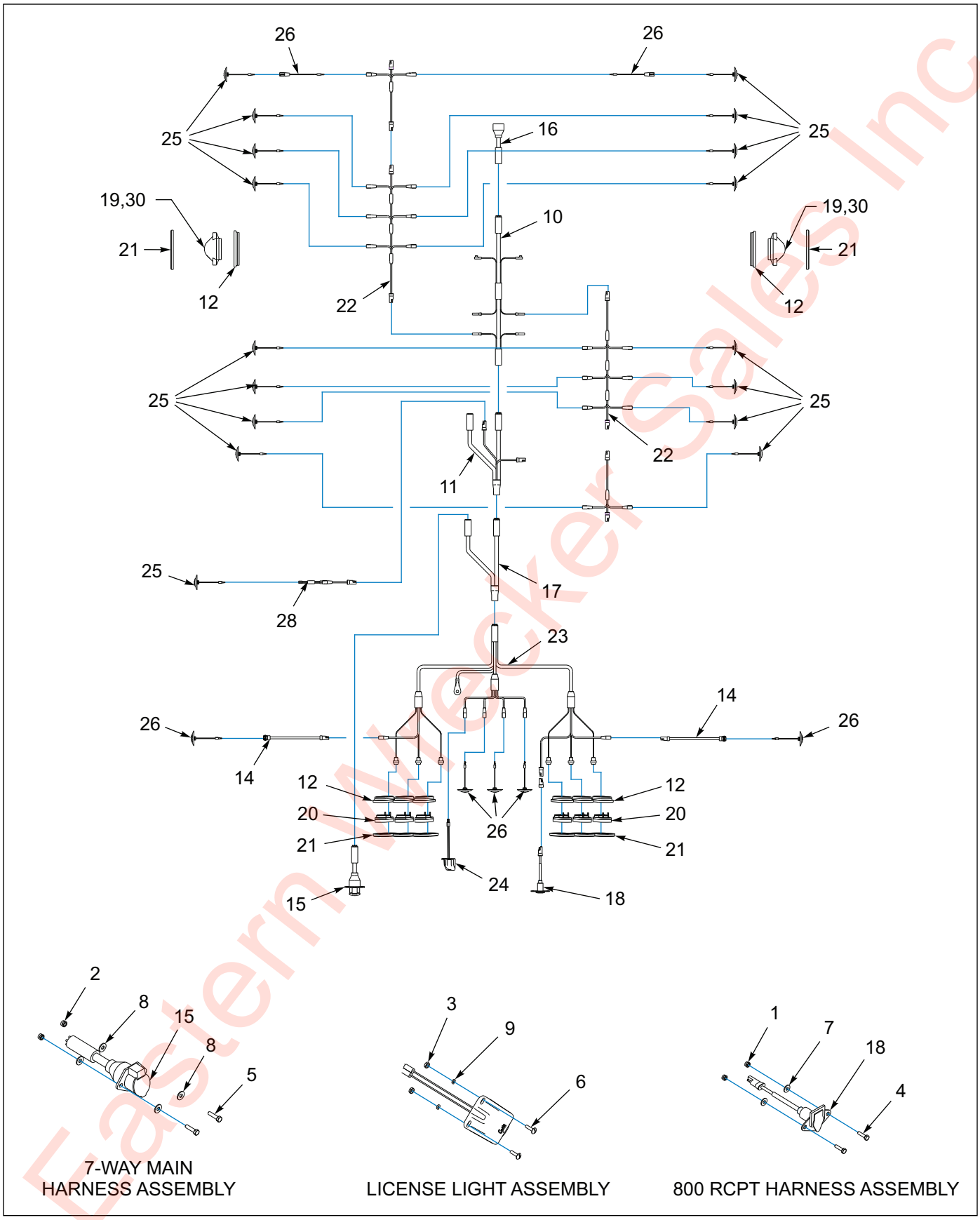

Eastern Wrecker Sales Inc

Figure 1-43: Electrical System - 855E Paver

Electrical System - 855E Paver

ITEM	PART NO.	DESCRIPTION	QTY.		
	198495	FRAME ASSY 855EPAV 23'	*		
	198497	FRAME ASSY 855EPAV-23' GALV	*		
	198496	FRAME ASSY 855EPAV 20-1/2		*	
	198517	FRAME ASSY 855EPAV-23'HYD FLIP			*
1	1-512-010005-01	NUT,HEX,SLFLKG GRB 1/4-20	2	2	2
2	1-512-010005-03	NUT HEX SLFLKG GRB 5/16-18	2	2	2
3	1-512-010007-03	NUT, HEX 10-24	2	2	2
4	1-654-010047-06	SCREW,HX CP 1/4-20UNCX1 GR5	2	2	2
5	1-654-010049-06	SCREW,H/CAP,5/16-18UNCX1-1/4	2	2	2
6	1-656-010003051	SCREW,RH HD MACH 10-24X3/4	2	2	2
7	1-861-010032-07	WASHER,FLAT 1/4 ZP	2	2	2
8	1-861-010032-09	WASHER, FLAT 5/16 W ZP/CD	4	4	4
9	1-861-010034-07	WASHER,LKG,HLCL SPR, NO 10	2	2	2
10	143102	HARNESS BED MAIN GROTE	1	1	1
11	143103	HARNESS ECHAIN GROTE	1	1	1
12	143114	GROMMET OVAL GROTE **(BEFORE 01/02/20)**	8	8	8
13	143123	GREASE DIELECTRIC 4 OZ TUBE **(NOT SHOWN)**	.25	.25	.25
14	144609	MARKER LAMP PIGTAIL HARNESS	2	2	2
15	146897	HARNESS 7WAY RECP REAR GROTE	1	1	1
16	146898	HARNESS 7WAY PLUG G/N GROTE	1	1	1
17	146929	HARNESS Y SPLITTER GROTE	1	1	1
18	150116	HARNESS ASSY RCPT 800	1	1	1
19	169410	LIGHT YEL MID TURN GROTE	2	2	--
20	179902	LIGHT S/T/T RED CLEAR LENS GRT **(BEFORE 01/02/20)**	6	6	6
20	213295	LIGHT S/T/T RED CLEAR LENS GRT **(AFTER 01/02/20)**	6	6	6
21	180570	COVER CHROME OBLONG GROM **(BEFORE 01/02/20)**	8	8	8
21	213296	COVER CHROME OBLONG GROM **(AFTER 01/02/20)**	8	8	8
22	187856	HARNESS MARKER MID DECK	2	2	2
23	187859	HARNESS BUMPER MICRONOVA GROTE	1	1	1
24	187860	LIGHT ASSY LICENSE LED GROTE	1	1	1
25	187863	LIGHT YEL LED.75CL/MK CLEAR CB	13	11	17
26	187864	LIGHT RED LED.75CL/MK CLEAR CB	5	5	5
27	191568	HARNESS MARKER LAMP MICRONOVA	2	2	2
28	200037	HARNESS ABS LIGHT SHORT	1	1	1
29	43029	HOSE WRAP AEROQUIP 1/4 **(NOT SHOWN)**	3	3	3
30	187868	LIGHT MID-TURN LED CLEAR LENS	--	--	2

Eastern Wheel Sales Inc

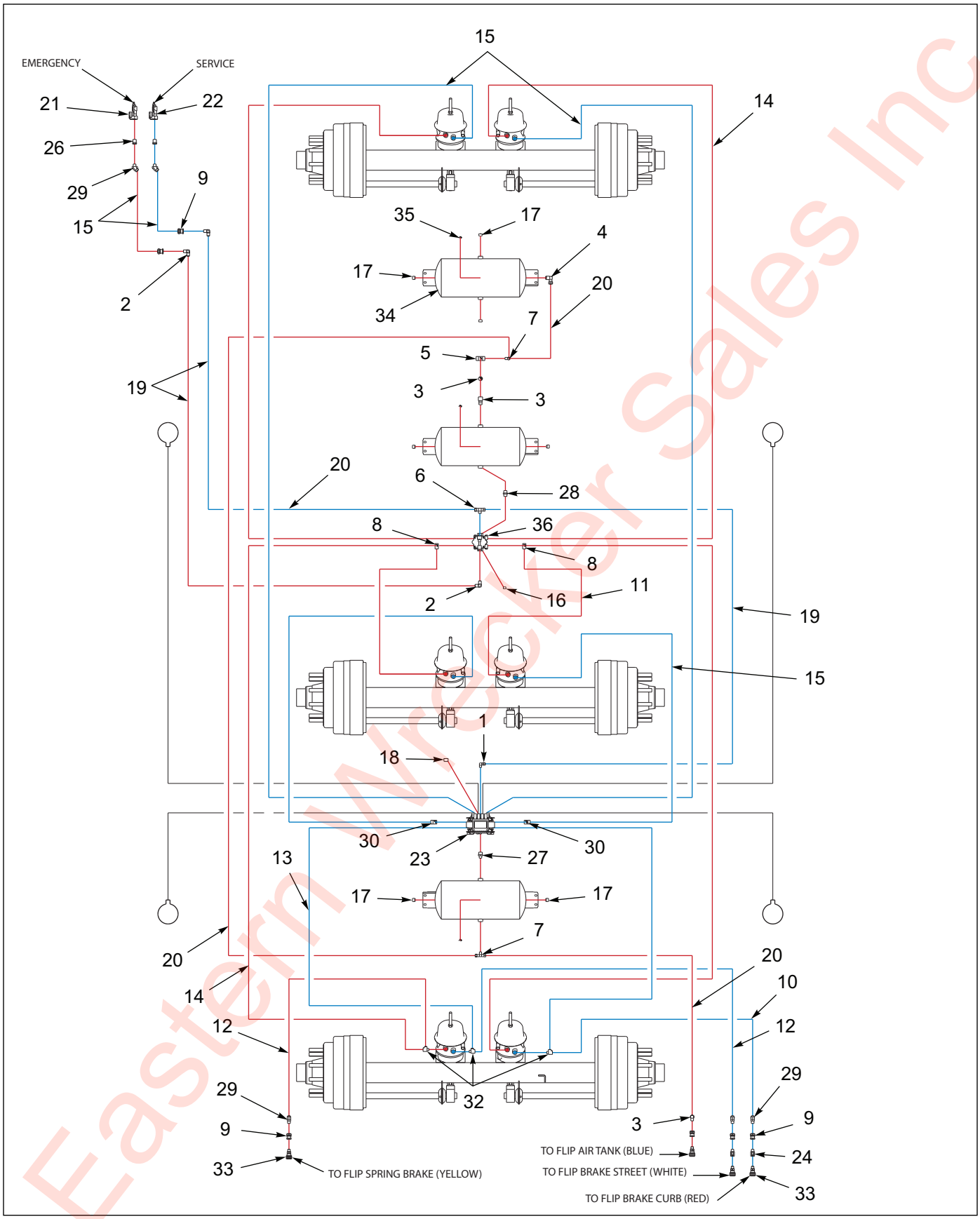

Figure 1-44: Air Brake System - 855E Paver

Eastern Wrecker Sales Inc

Air Brake System - 855E Paver

ITEM	PART NO.	DESCRIPTION	QTY.
	198495	FRAME ASSY 855EPAV 23'	
	198496	FRAME ASSY 855EPAV 20-1/2	
	198497	FRAME ASSY 855EPAV-23' GALV	
	198517	FRAME ASSY 855EPAV-23'HYD FLIP	
1	1-297-010008-18	FITTING,AIR 90 3/8TUBEX1/4NPT	1
2	1-297-010008-20	FITTING,AIR 90 3/8TUBEX3/8NPT	3
3	1-297-010008-23	FITTING,AIR 90 1/2TUBEX3/8NPT	1
4	1-297-010008-24	FITTING,AIR 90 1/2TUBEX1/2NPT	1
5	1-297-010009-04	FITTING,AIR, PIPE TEE 1/2	1
6	1-297-010015-07	FITTING,AIR,BR TEE 3/8T-3/8P	1
7	1-297-010015-11	FITTING,AIR,BR TEE 1/2T-1/2P	2
8	1-297-010018-03	FITTING,3/8 BRASS PIPE,ST TEE	2
9	1-297-010022-03	FITTING,AIR ANCHR CPLG, 3/8NPT	6
10	1-384-010038-2	HOSE ASM AIR 3/8X66,W/3/8 END	1
11	1-384-010038024	HOSE ASM AIR 3/8X24,W/3/8 END	4
12	1-384-010038054	HOSE ASM AIR 3/8X54,W/3/8 END	2
13	1-384-010038060	HOSE ASM AIR 3/8X60,W/3/8 END	2
14	1-384-010038072	HOSE ASM AIR 3/8X72,W/3/8 END	4
15	1-384-010038084	HOSE ASM AIR 3/8X84,W/3/8 END	4
16	1-560-010002-03	PLUG, PIPE, 3/8NPTF	1
17	1-560-010002-04	PLUG, PIPE, 1/2NPT	7
18	1-560-010002-05	PLUG,PIPE, 3/4-14NPTF	1
19	1-833-010002	TUBING NYLON 3/8 OD	AR
20	1-833-010003	TUBING NYLON 1/2 OD	8
21	108801	GLAD HAND-RED-AIR	1
22	108802	GLAD HAND-BLUE-AIR	1
23	114586	ABS KIT WABCO 4S/2MTRI/SPREAD **(SEE PAGE 1-92)**	1
24	163578	VALVE MINI BALL AIR 3/8NPT	2
25	171664	AIR TANK MODIFY BRKT	1
26	2081-8-6S	REDUCER 1/2NPT X 3/8NPT	2
27	2083-12-8S	NIPPLE 3/4NPTX1/2NPT	1
28	2083-8-8S	NIPPLE 1/2NPTX1/2NPT	2
29	2088-6-6S	ADAPTER 45 3/8MPTX3/8FPT	5
30	2089-6-6S	ADAPTER 90 3/8MPTX3/8FPT	2
31	2089-8-8S	ADAPTER 90 1/2MPTX1/2FPT	1
32	2092-6-6S	TEE,#6NPT,1MALE, 2 FEMALE	3
33	3-220-010004	COUPLER AIR FEMALE 3/8-18MPT	4
34	3-780-010002	TANK AIR 9.5X22.5 .5NPT PORTS	3
35	56D4	COCK,DRAIN AIR TANK VEL036019	2
36	758-181	VALVE TASK 4 PORT	1
37	138962	AXLE WLDMT 2516SPG 79 TIS	REF

Eastern Tracker Sales Inc

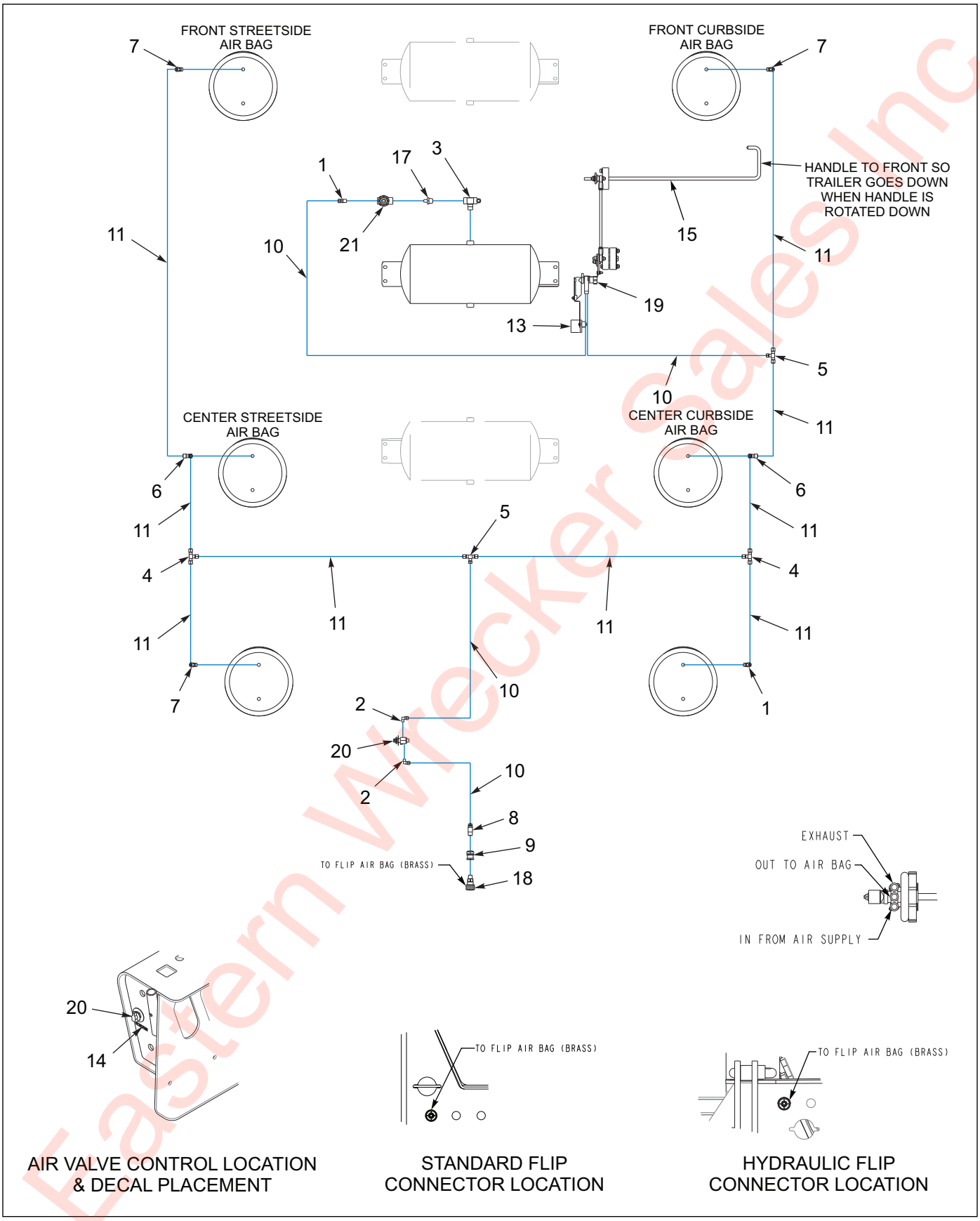

Figure 1-45: Air Ride Suspension - 855E Paver

Eastern Wrecker Sales Inc

Air Ride Suspension - 855E Paver

ITEM	PART NO.	DESCRIPTION	QTY.
	198495	FRAME ASSY 855EPAV 23'	
	198496	FRAME ASSY 855EPAV 20-1/2	
	198497	FRAME ASSY 855EPAV-23' GALV	
	198517	FRAME ASSY 855EPAV-23'HYD FLIP	
1	1-297-010007-05	FITTING, AIR, 1/4TUBEX1/4NPT	1
2	1-297-010008-05	FITTING,AIR 90 1/4TUBEX1/8NPT	2
3	1-297-010009-04	FITTING,AIR, PIPE TEE 1/2	REF
4	1-297-010010-03	FITTING,AIR, UNION TEE 3/8	2
5	1-297-010010-04	FITTING,AIR,UN/TEE3/8X3/8X1/4	2
6	1-297-010011-04	FITTING,AIR,M/RUN TEE 3/8-1/4	2
7	1-297-010013-11	FITTING,AIR,45 M/ELB3/8T-1/4P	4
8	1-297-010013-12	FITTING AIR 45 M/ELB3/8TX3/8P	1
9	1-297-010022-03	FITTING,AIR ANCHR CPLG, 3/8NPT	1
10	1-833-010001	TUBING NYLON 1/4 OD	15
11	1-833-010002	TUBING NYLON 3/8 OD	34
12	102732	AIR CONTROL KIT **(ITEMS 13, 19, & 21) (SEE PAGE 1-93)**	1
13	111021	KIT SRK-167 NEWAY 952-50-001	REF
14	168973	DECAL FLIP AXLE AIR BAGS	1
15	194425	ROD HEIGHT CTRL 835	1
16	-----	855E WELDMENT **(NOT SHOWN)**	1
17	2083-8-4S	NIPPLE HEX 1/2PIPE - 1/4PIPE	1
18	3-220-010004	COUPLER AIR FEMALE 3/8-18MPT **(NOT SHOWN)**	1
19	900 54 007	HEIGHT CONTROL VALVE N	REF
20	900-54-088	VALVE, MANUAL OPERATED	1
21	905-54-107	BRAKE PROTECTION VALVE	REF

Eastern Wrecker Sales Inc

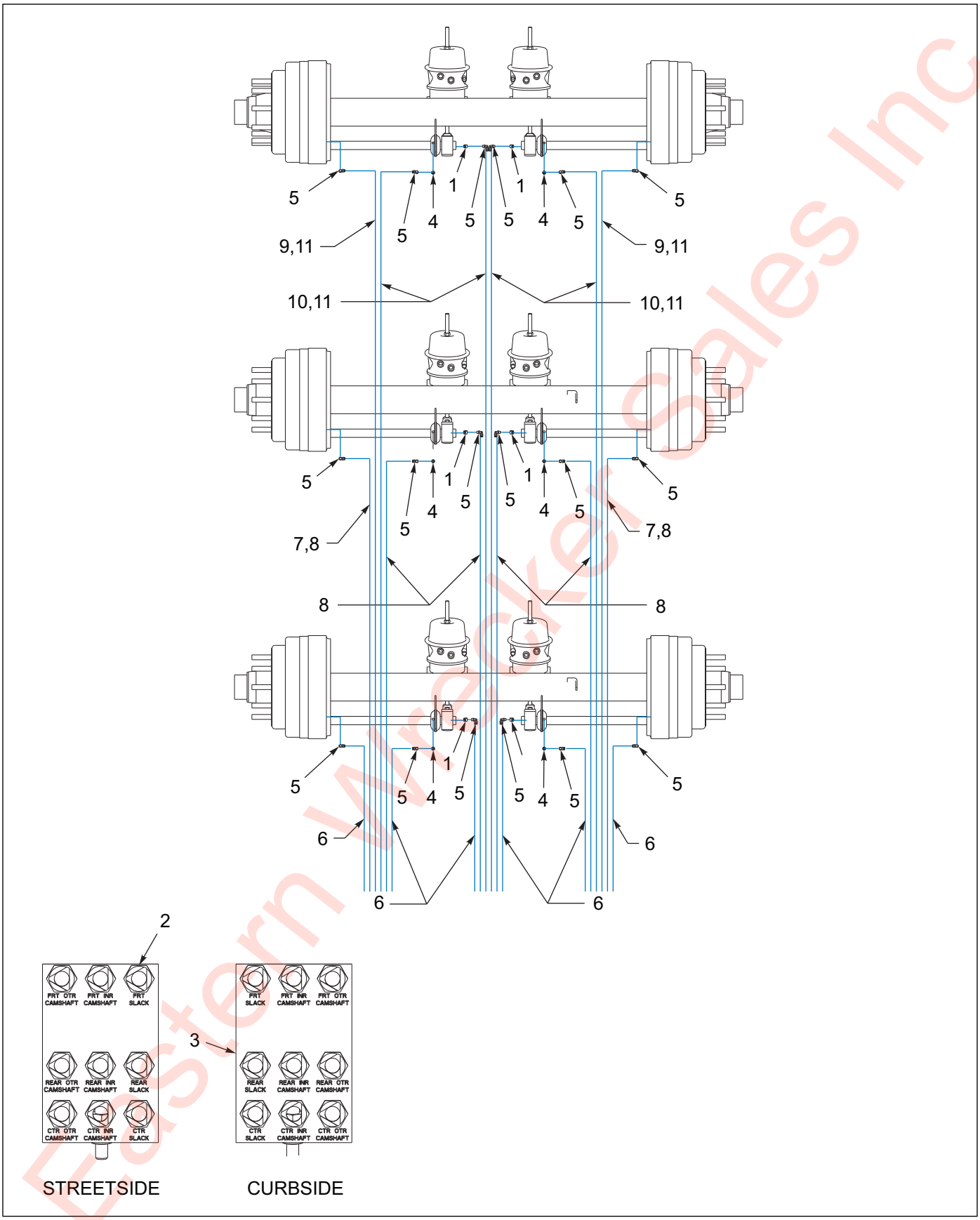

Figure 1-46: Grease System - 855E Paver

Eastern Wrecker Sales Inc

Grease System - 855E Paver

ITEM	PART NO.	DESCRIPTION	QTY.
	198495	FRAME ASSY 855EPAV 23'	
	198496	FRAME ASSY 855EPAV 20-1/2	
	198497	FRAME ASSY 855EPAV-23' GALV	
	198517	FRAME ASSY 855EPAV-23'HYD FLIP	
1	101528	ELBOW,BRASS PIPE STREET	6
2	142545	NUT 7/16 FOR BULKHEAD	18
3	142553	DECAL, GREASE TRL U/C	2
4	202094	ADAPTER 5/16--18X1/8NPTF	6
5	202099	FITTING GREASE 90 SWIV PTC 1/8	18
6	202102	HOSE ASSY GREASE 1/8 X 36	6
7	202111	HOSE ASSY GREASE 1/8 X 102	2
8	202112	HOSE ASSY GREASE 1/8 X 118	4
9	202118	HOSE ASSY GREASE 1/8 X 156	2
10	202119	HOSE ASSY GREASE 1/8 X 162	4

Eastern Wrecker Sales Inc

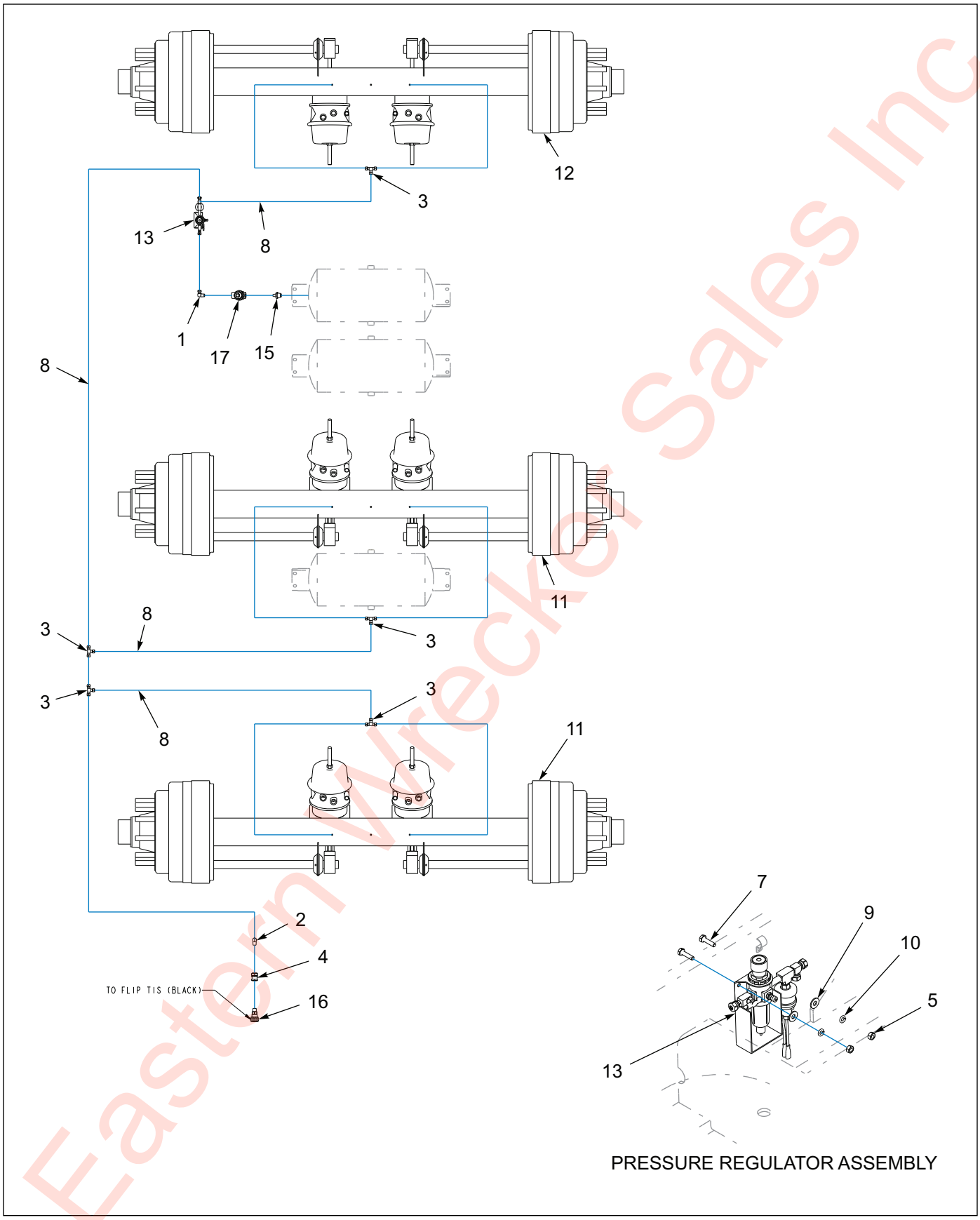

Figure 1-47: Tire Inflation System - 855E Paver

Eastern Wrecker Sales Inc

Tire Inflation System - 855E Paver

ITEM	PART NO.	DESCRIPTION	QTY.
	198495	FRAME ASSY 855EPAV 23'	
	198496	FRAME ASSY 855EPAV 20-1/2	
	198497	FRAME ASSY 855EPAV-23' GALV	
	198517	FRAME ASSY 855EPAV-23'HYD FLIP	
1	1-297-010008-07	FITTING AIR 90 1/4TUBEX1/4NPT	REF
2	1-297-010008-09	FITTING,AIR 90 1/4TUBEX3/8NPT	REF
3	1-297-010010-01	FITTING,AIR,UNION TEE 1/4	REF
4	1-297-010022-03	FITTING,AIR ANCHR CPLG, 3/8NPT	REF
5	1-512-010007-05	NUT, HEX 1/4-20	REF
6	1-560-010002-04	PLUG, PIPE, 1/2NPT	REF
7	1-654-010047-06	SCREW,HX CP 1/4-20UNCX1 GR5	REF
8	1-833-010001	TUBING NYLON 1/4 OD	REF
9	1-861-010032-07	WASHER,FLAT 1/4 ZP	REF
10	1-861-010034-09	WASHER, LKG HLCL SPR, 1/4	REF
11	138962	AXLE WLDMT 2516SPG 79 TIS	REF
12	142891	AXLE WLDMT 2516 SPG 79FMT TIS	REF
13	157703	TIRE INFLATION SYSTEM 3AX **(SEE PAGE 1-208)**	REF
14	176474	HARNESS KIT TIRE INFL 800 **(NOT SHOWN)**	REF
15	2083-8-4S	NIPPLE HEX 1/2PIPE - 1/4PIPE	REF
16	3-220-010004	COUPLER AIR FEMALE 3/8-18MPT	REF
17	905-54-107	BRAKE PROTECTION VALVE	REF

Eastern Wrecker Sales Inc

Brake & Air Control Kits

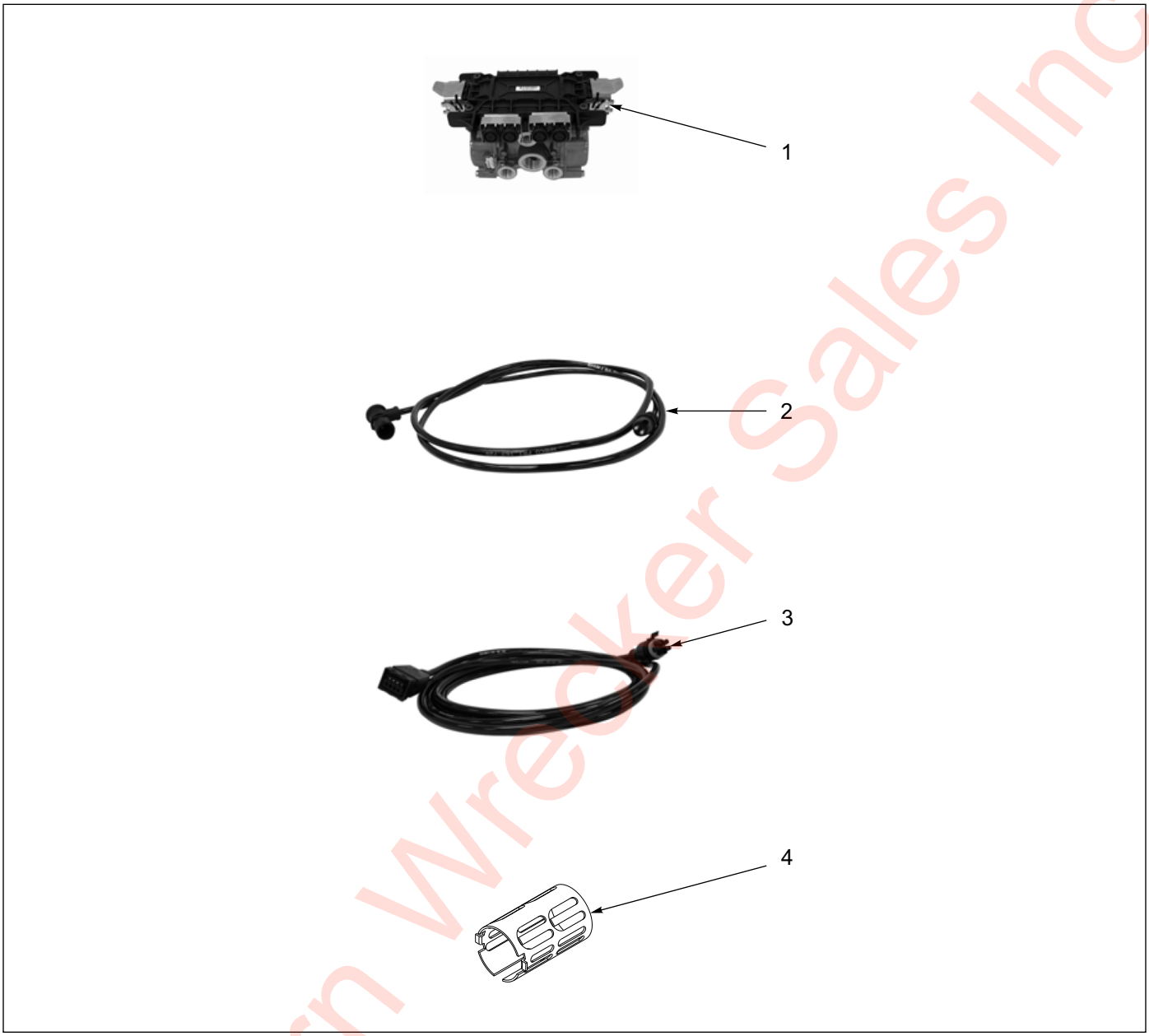

Figure 1-48: ABS Brake Kit - Rockwell

ABS Brake Kit - Rockwell

ITEM	PART NO.	DESCRIPTION	QTY.
	114586	ABS BRAKE KIT 4S/2M-TRI/SPRD	
1	114588	ECU/VALVE ASSEMBLY	1
2	103861	SENSOR EXTENSION CABLE - 10 FT	4
3	147464	POWER/DIAGNOSTIC CABLE 4.0M/3.0M	1
4	101849	SPRING CLIP, ABS SENSOR	2
5	101847	ABS SENSOR CABLE-4M 90° - 1FT **(NOT SHOWN) (SEE PAGE 1-98 FOR REFERENCE)**	2

Eastern Wrecker Sales Inc

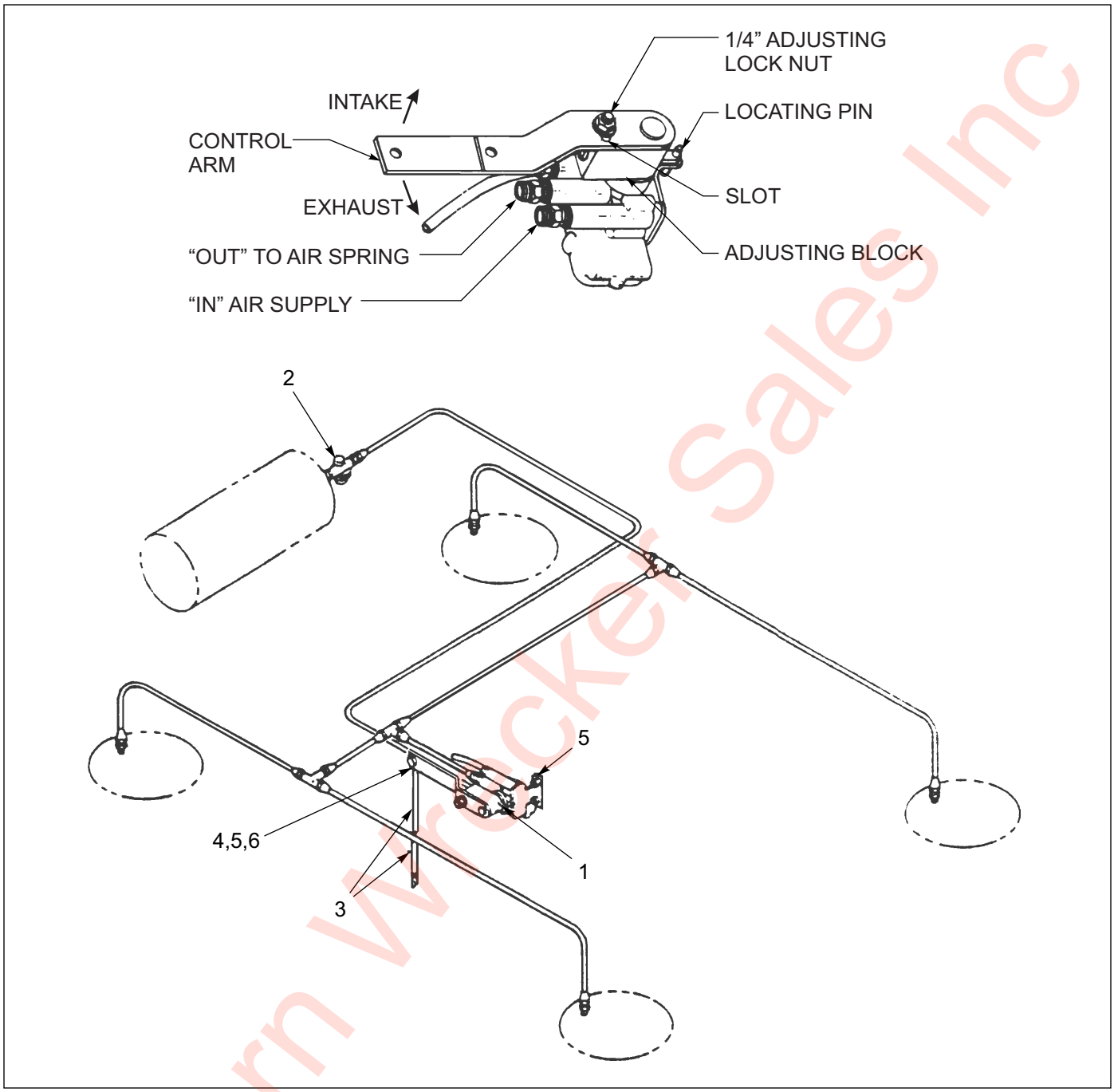

Figure 1-49: Air Control Kit

Air Control Kit

ITEM	PART NO.	DESCRIPTION	QTY.
	102732	AIR CONTROL KIT NEWAY	
1	900 54 007	HEIGHT CONTROL VALVE	1
2	905-54-107	AIR PRESSURE PROTECTION VALVE & FILTER	1
3	111021	SRK - 167 KIT ADJUSTABLE LINK ASSEMBLY	1
4	1-654-010047-04	SCREW, HEX HEAD CAP 1/4-20 X 3/4 GR5	2
5	1-512-010005-01	NUT, HEX LOCK 1/4-20 GRB	2
6	-----	DECAL - OPERATING	1

Eastern Wrecker Sales Inc

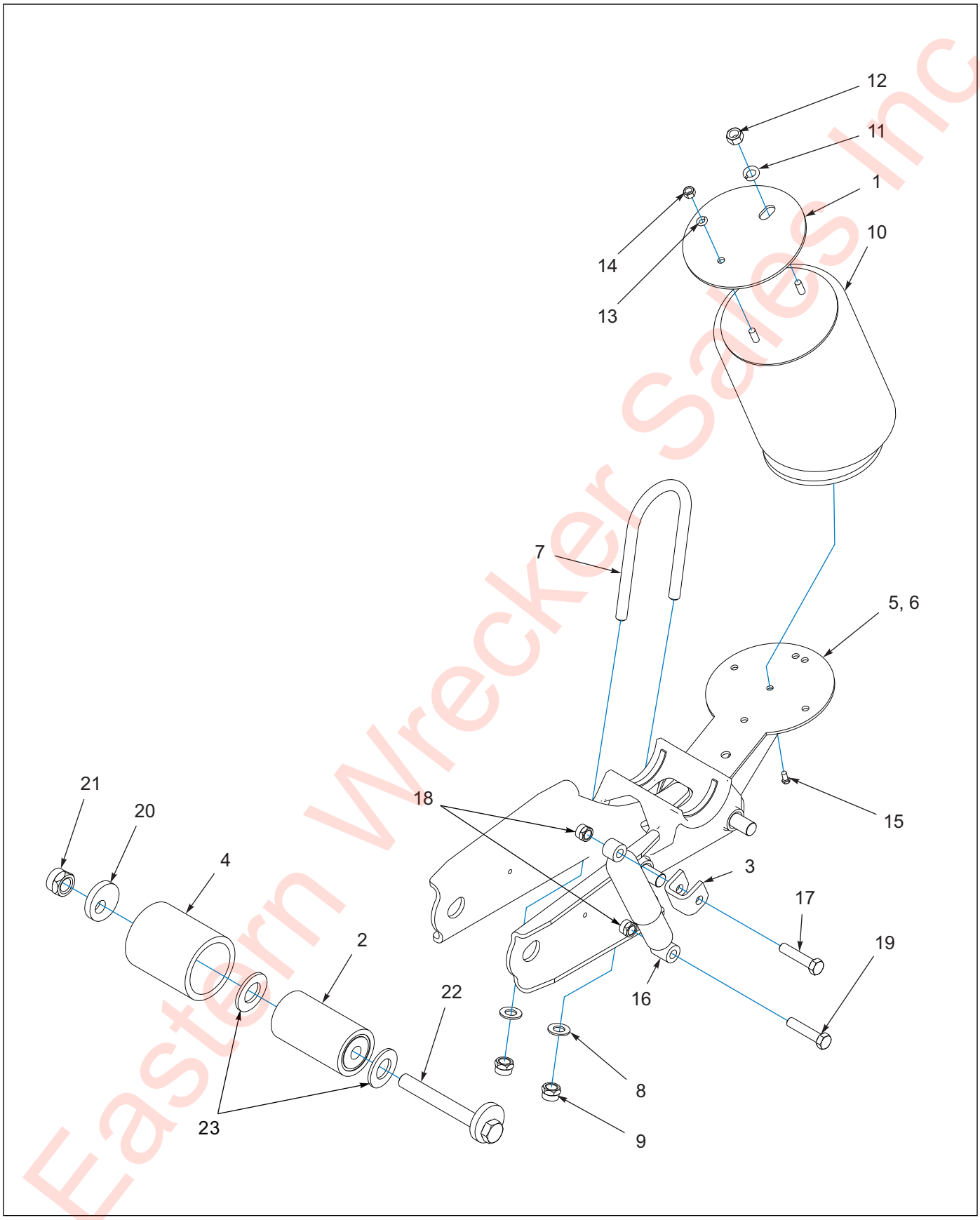

Figure 1-50: Suspension Hanger - RLU 250 FMT (Front)

Eastern Wrecker Sales Inc

Suspension Hanger - RLU 250 FMT (Front)

ITEM	PART NO.	DESCRIPTION	QTY.
	167392	SUSPENSION RLU 250 FMT LP **(REF ONLY)**	
	110621	SUSPENSION BRACKET (ITEMS 1-4)	
	167391	SUSPENSION, BEAM RLU 250 FMT **(ITEMS 5-9)**	
	110622	SUSPENSION, FASTENER RLU 250 FMT **(ITEMS 10-23)**	
1	110615	AIR SPRING MOUNTING PLATE	2
2	111029	BUSHING YOKE	2
3	111027	BRACKET, SHOCK UPPER	2
4	111028	BUSHING SLEEVE 5.5	2
5	191588	BEAM EQUALIZING ASSY RH W/ ADAPTERS	1
6	191589	BEAM EQUALIZING ASSY LH W/ ADAPTERS	1
7	111033	U-BOLT .875-9 X 11 GR8	2
8	936 00 162	WASHER, FLAT .78	4
9	934 00 498	NUT, HEX LOCK .875-9 GRC	4
10	111036	AIR SPRING	2
11	936 00 077	3/4 WASHER	2
12	934 00 149	3/4-16 HEX NUT **(TOP OF AIR SPRING)**	2
13	12486400-520	WASHER, 1/2	2
14	1-654-010051-05	SCREW, HEX HEAD CAP 3/8-16 X 1 GR5	2
15	12486400-521	1/2-13 HEX NUT	2
16	900-44-162	SHOCK ABSORBER	2
17	12486400-526	SCREW, HEX HEAD CAP 3/4-10 X 3-1/2 **(UPPER SHOCK)**	2
18	934-00-492	LOCK NUT 3/4-10 **(UPPER SHOCK)**	4
19	129004	SCREW, HEX HEAD CAP 3/4-10 X 4 GR5 **(LOWER SHOCK)**	2
20	111038	ALIGNMENT BLOCK ASSEMBLY **(PIVOT)**	2
21	129006	ALIGN BLOCK NON-WELD	2
22	111008	1-1/8” LOCK NUT	6
23	111037	WEAR WASHER 1.125	4
24	134144	ALIGNMENT, BLOCK ASSY **(ITEMS 20-23)**	1

Eastern Wrecker Sales Inc

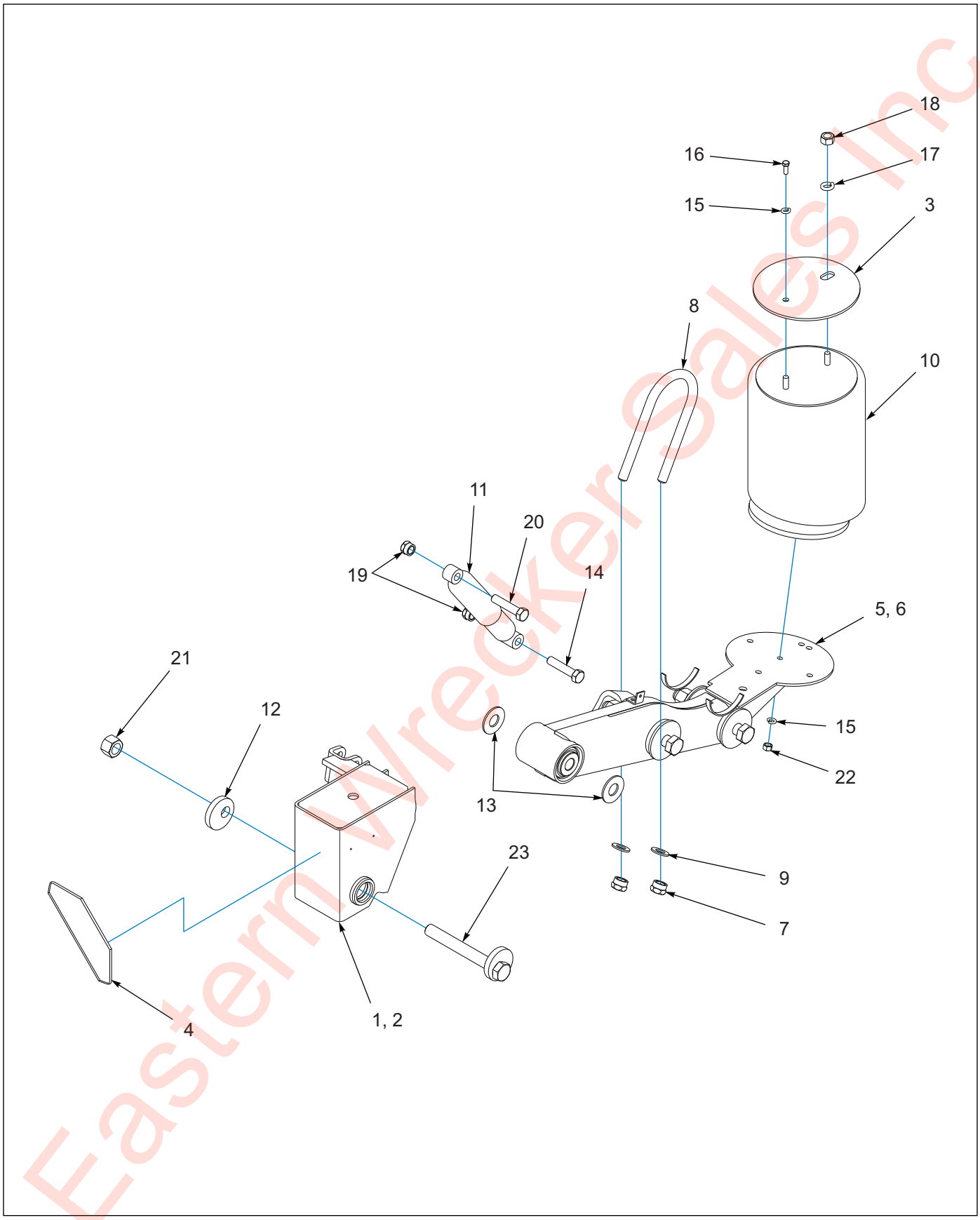

Eastern Wrecker Sales Inc

Figure 1-51: Suspension Hanger RLU-250-9-4 (Center & Rear)

Suspension Hanger RLU- 250-9-4 (Center & Rear)

ITEM	PART NO.	DESCRIPTION	QTY.
	128434	SUSPENSION RLU-250-9-4 **(CENTER AND REAR) (REF ONLY)**	
	110617	SUSPENSION BRACKET **(ITEMS 1-4)**	
	110616	SUSPENSION, BEAM RLU 250-9-4 **(ITEMS 5-9)**	
	110618	SUSPENSION, FASTENER RLU 250-9-4 **(ITEMS 10-23)**	
1	111026	FRAME BRACKET **(CURBSIDE EZ-ALIGN)**	1
2	111025	FRAME BRACKET **(ROADSIDE EZ-ALIGN)**	1
3	110615	PLATE, AIR BAG MOUNT	2
4	900 23 002	ANGLE BRACE	2
5	111031	EQUALIZING BEAM W/ ADAPTERS **(ROADSIDE)**	1
6	111030	EQUALIZING BEAM W/ ADAPTERS **(CURBSIDE)**	1
7	934 00 498	NUT, HEX LOCK .875-9 GRC	4
8	111033	U-BOLT .875-9 X 11 GR8	2
9	936 00 162	WASHER, FLAT .78	4
10	111036	AIR SPRING	2
11	900-44-162	SHOCK ABSORBER	2
12	129006	ALIGN BLOCK NON-WELD	2
13	900-36-177	1-1/8” SPACER WASHER	4
14	129004	SCREW, HEX HEAD CAP 3/4-10 X 4 GR5 **(LOWER SHOCK BOLT)**	2
15	12486400-520	WASHER, 1/2	2
16	1-654-010051-05	SCREW, HEX HEAD CAP 3/8-16 X 1 GR5	2
17	936 00 077	3/4 WASHER	2
18	934 00 149	3/4-16 HEX NUT **(TOP OF AIR SPRING)**	2
19	934 00 492	NUT, HEX 3/4-10 **(UPPER SHOCK LOCK NUT)**	4
20	12486400-526	SCREW, HEX HEAD CAP 3/4-10 X 3-1/2 **(UPPER SHOCK)**	2
21	111008	1-1/8” LOCK NUT	2
22	12486400-521	1/2-13 HEX NUT	2
23	129005	PIVOT BOLT ALIGNMENT BLOCK ASSEMBLY **(EZ-ALIGN)**	2
24	170115	WIRE ROPE STRAP KIT RLU 250-9-4	2

Eastern Wrecker Sales Inc

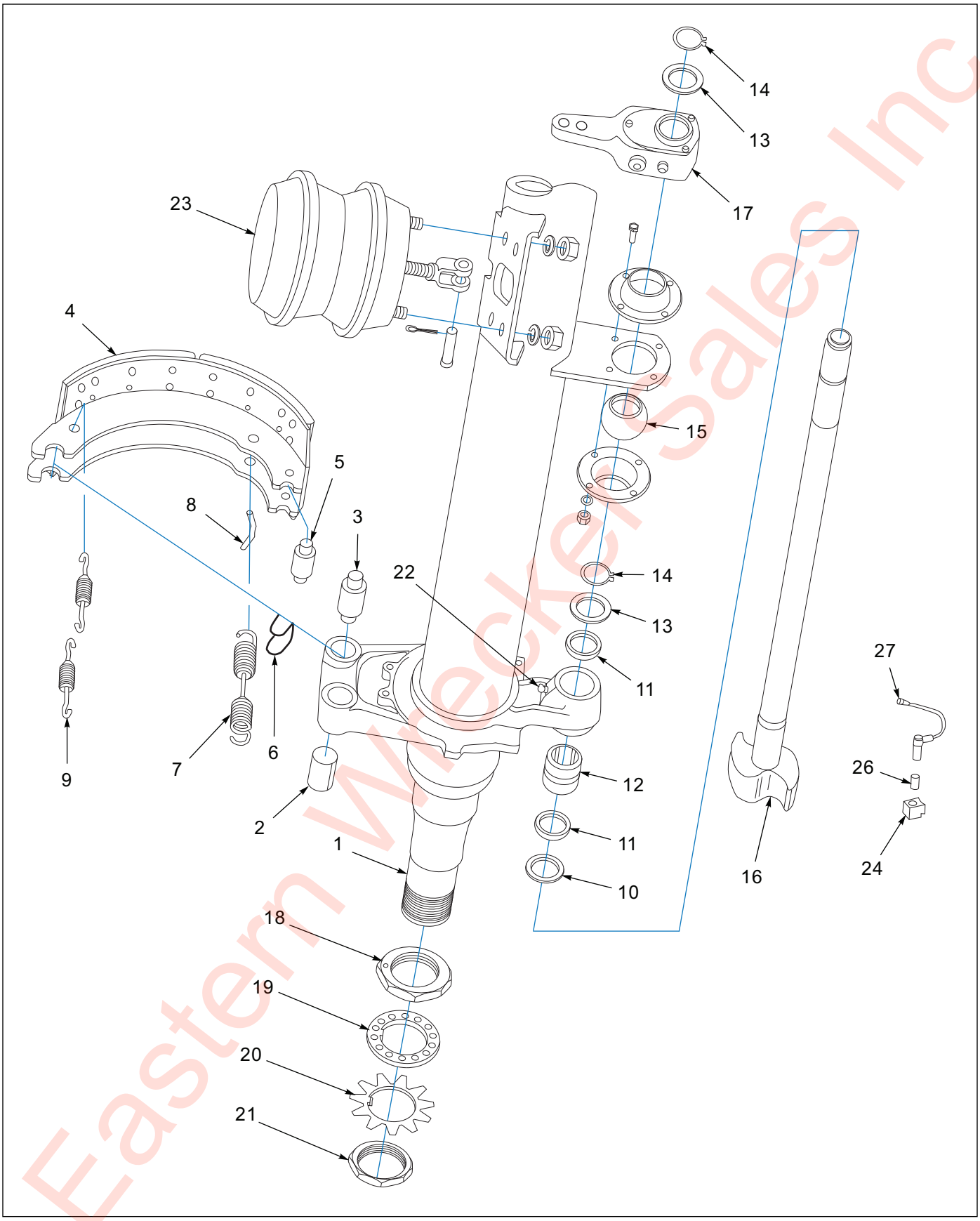

Figure 1-52: Axle and Brake Assembly - Dexter 16-1/2” X 7”

Eastern Wrecker Sales Inc

Axle and Brake Assembly - Dexter 16-1/2” X 7”

ITEM	PART NO.	DESCRIPTION	QTY.
	115717	AXLE 79, 16.5 X 7 SPG BRK - 25K	
	138956	AXLE 79, 16.5 X 7 SPG BRK - 25K TIS	
	158538	AXLE 87, 16.5 X 7 SPR BRK - 25K	
	172098	AXLE 87 16.5 X 7 SPR BRK - 25K TIS	
	K71-136-00	BRAKE SHOE HARDWARE KIT **(ITEMS 1-7)**	
	-----	BRAKE BLOCK KIT **(ITEMS 8 & 9)**	
	138090	CAMSHAFT REPAIR KIT **(ITEMS 10-16)**	
1	-----	BEAM W/ BRACKETS	1
2	-----	BUSHING, SPIDER ANCHOR PIN	4
3	-----	PIN, ANCHOR	4
4	040-180-00	SHOE AND LINING ASSEMBLY	4
5	014-065-00	ROLLER	4
6	071-122-00	RETAINER, ROLLER	4
7	046-096-00	SPRING, SHOE RETRACTOR	2
8	056-018-00	RETAINER PIN RETRACTOR SPRING	4
9	046-097-00	KEEPER SPRING	4
10	005-096-00	WASHER CAMSHAFT	2
11	010-052-00	SEAL GREASE	4
12	-----	BUSHING CAMSHAFT SPIDER	2
13	-----	WASHER CAMSHAFT END	2
14	069-078-00	RETAINER, CAMSHAFT END	2
15	-----	BUSHING CAMSHAFT SUPPORT	2
16	137461	CAMSHAFT, 25" LH	1
16	137485	CAMSHAFT, 25" RH	1
17	139383	SLACK ADJUSTER, AUTOMATIC	2
18	006-114-00	NUT, INNER SPINDLE	2
19	005-098-00	WASHER, SPINDLE LOCK	2
20	005-099-00	WASHER, TABBED SPINDLE LOCK	2
21	006-115-00	NUT, OUTER SPINDLE	2
22	-----	FITTING, GREASE 45°	2
23	034-058-01	AIR CHAMBER, SPRING BRAKE	4
23	034-057-01	AIR CHAMBER, SERVICE BRAKE	2
24	103805	SENSOR BLOCK	2
26	144979	RETAINER CLIP	2
27	101847	ABS SENSOR CABLE, 4M 90DEG **(1 FOOT)**	2
-----	138090	CAMSHAFT REPAIR KIT **(ITEMS 10-15, & 22)**	REF
-----	K71-136-00	BRAKE SHOE HARDWARE KIT **(ITEMS 2, 3, 5, 6, 7, 8, & 9)**	REF

Eastern Wrecker Sales Inc

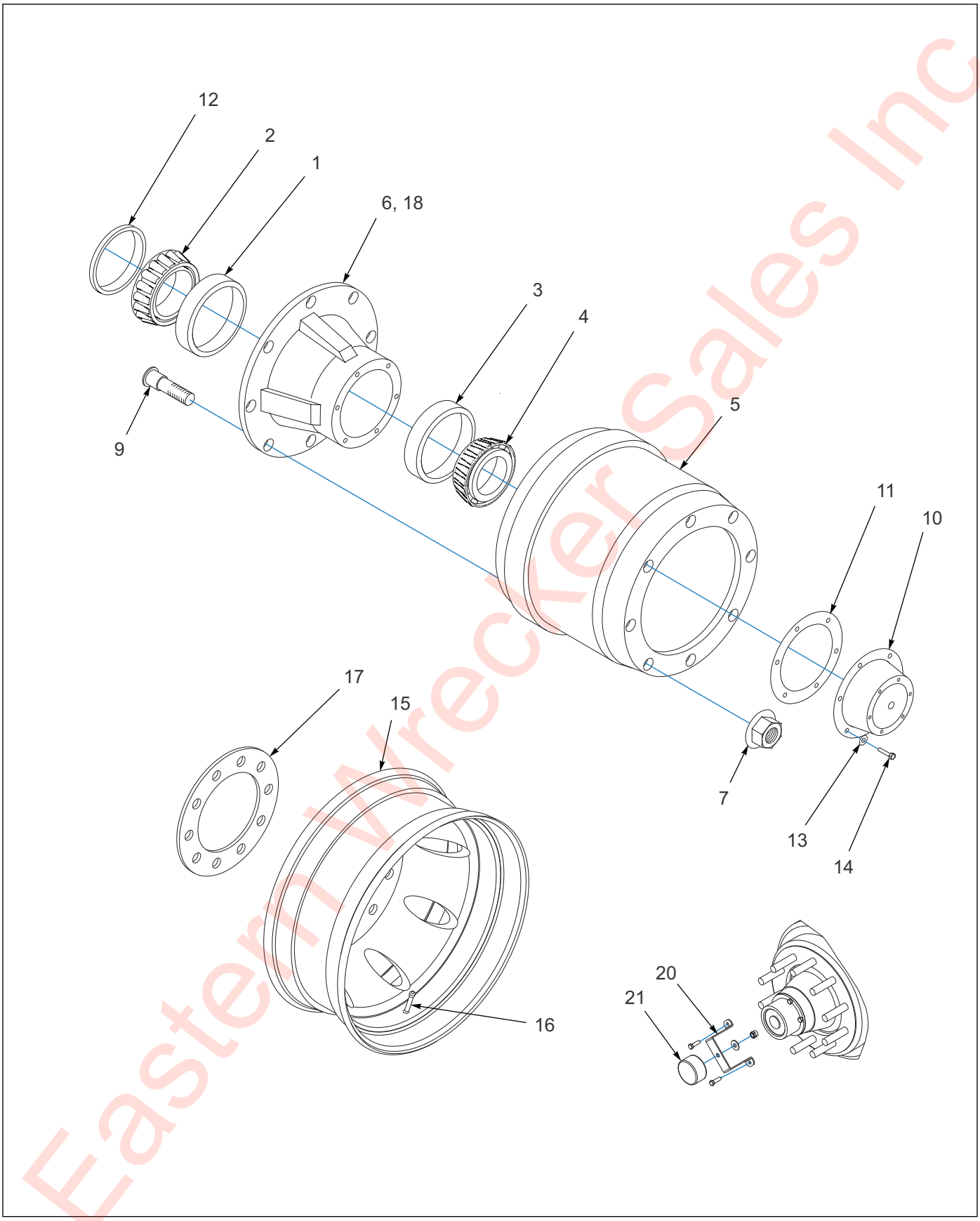

Eastern Wrecker Sales Inc

Figure 1-53: Outboard Pilot Mount Hub and Drum

Outboard Pilot Mount Hub and Drum Assembly

ITEM	PART NO.	DESCRIPTION	QTY.
1	HM218210	INNER BEARING CUP	1
2	HM218248	INNER BEARING CONE	1
3	HM212011	OUTER BEARING CUP	1
4	HM212049	OUTER BEARING CONE	1
5	110976	OUTBOARD MOUNTED BRAKE DRUM	1
6	110975	HUB W/ STUDS	1
7	179933	NUT FLANGE MM22X1.5	10
9	113536	STUD R.H. 22MM 3.5 STANDOUT	10
10	4009	CAP, HUB	1
11	3067	GASKET, OIL CAP	1
12	3-659-010012	SEAL	1
13	1-861-010034-10	WASHER, SPLIT LOCK 5/16	6
14	1-654-010049-03	SCREW, HEX HEAD CAP 5/16-18 GR5	6
15	3-870-010106	WHEEL, POLISHED ALUM PILOT MNT 22.5 X 7.50 **(10 BOLT)**	1
15	111652	WHEEL, PILOT MNT 22.5 X 8.25, PP **(10 BOLT) (ALUM COLOR.)**	1
15	3-870-010116	WHEEL, MACHINED ALUM PILOT MNT 22.5 X 7.50 **(10 BOLT)**	1
15	3-870-010110	WHEEL, DISC PILOT MNT 22.5 X 8.25 **(10 BOLT)(STD. STEEL)**	1
15	111416	WHEEL, ALUM PILOT 22.5 X 8.25 POL **(10 BOLT)**	1
15	111417	WHEEL, ALUM PILOT 22.5 X 8.25 MACH **(10 BOLT)**	1
15	134757	WHEEL, ALUM PILOT 22.5 X 8.25 POL **(10 BOLT)**	1
15	139600	WHEEL, ALUM DURABRITE 255/70R GY **(10 BOLT)**	1
16	TR573	VALVE STEM	1
16	TR545D	VALVE STEM **(ALUMINUM)**	1
17	-----	ABS TONE RING **(NOT SOLD SEPARATELY)**	1
18	3-870-010107	WHEEL GUARD 10 HOLE 285.75MM BC	REF
19	137108	HUBODOMETER 255/70R22.5 TIRE **(ITEMS 20 & 21; NOT SHOWN)**	1
20	112529	BRACKET, HUBODOMETER	1
21	113109	HUBODOMETER, 572 RPM	1

Eastern Wheel & Scales Inc

Ramp Assemblies

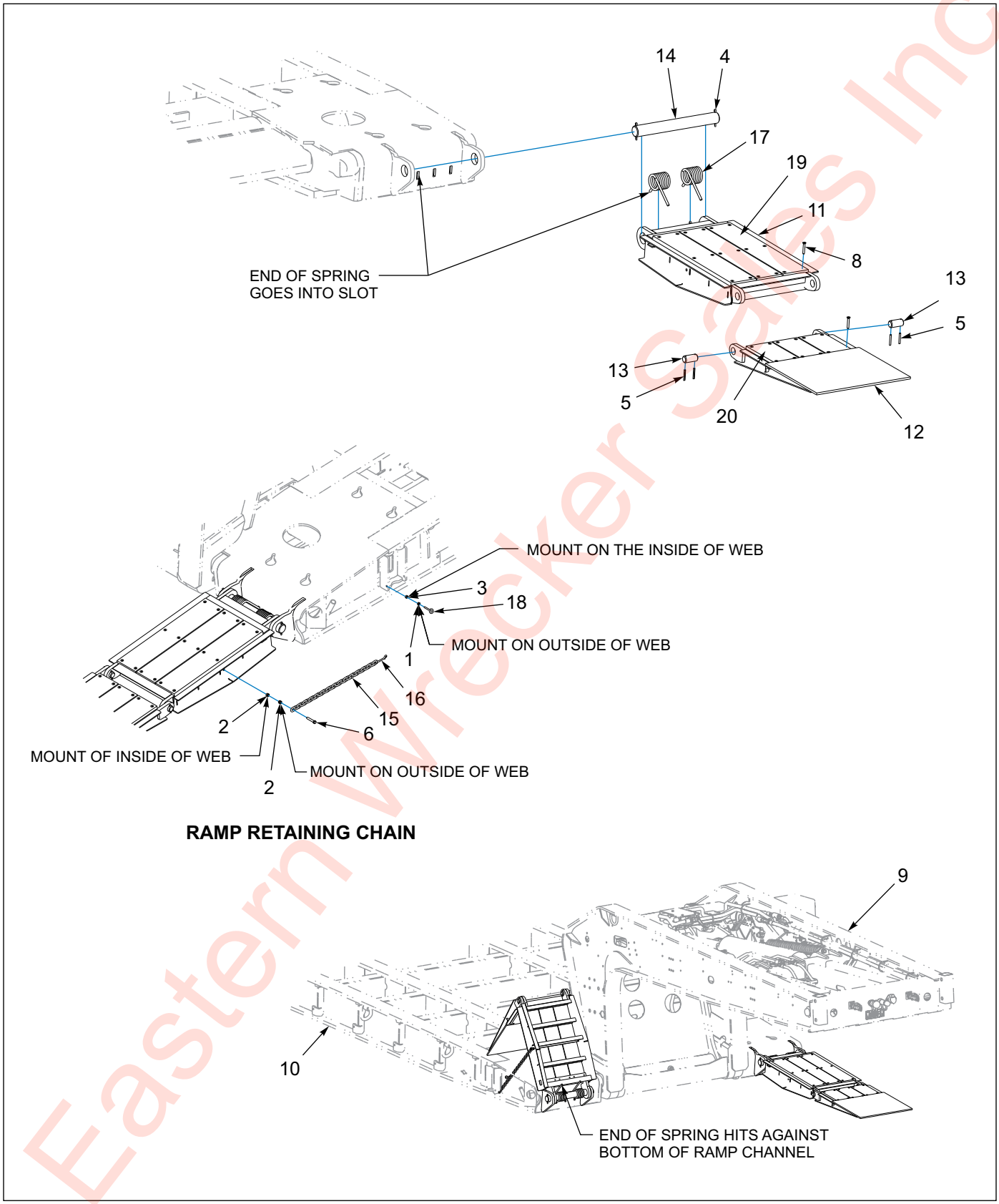

Figure 1-54: Ramp Assembly - Front Bi-Fold (855E Paver)

Eastern Wrecker Sales Inc

Ramp Assembly - Front Bi-Fold (855E Paver)

ITEM	PART NO.	DESCRIPTION	QTY.
	179324	RAMP INSTL FRT BI-FOLD 855PAV	
1	1-512-010005-03	NUT HEX SLFLKG GRB 5/16-18	2
2	1-512-010005-05	NUT, HEX, SLFLKG GRB 3/8-16	4
3	1-512-010007-06	NUT, HEX 5/16-18	2
4	1-557-010362-65	PIN COTTER, 1/4X2-1/2 ZP	4
5	1-647-010004221	PIN,SPRING 1/4X2 SLOTTED	8
6	1-654-010051-09	SCREW,HEX CAP,3/8-16UNCX2 GR5	2
7	145499	PRESERVATIVE WOODGUARD	0.5
8	158732	SCREW,5/16X2-1/4ZP TORX FLOOR	60
9	171679	GOOSENECK ASSY 855 - 12'5"	REF
10	183649	FRAME WLDMT 855PAV-23'	REF
11	184350	RAMP 855PAV WLDMT	2
12	184355	RAMP WLDMT END 855PAV	2
13	184381	PIN 1-1/4" DIA W/HOLES 2" CTRS	4
14	184382	PIN RAMP MOUNT 855PAV	2
15	187440	CHAIN, 3/16" LINK, 24" LONG	2
16	3-707-010001	SNAP, DOUBLE END	2
17	3-720-010084	SPRING,TORSION,TAG RAMP	4
18	5/16-18X1-1/2EB	EYE BOLT 5/16-18X1-1/2	2
19	RWD39000	APITONG, 1-3/8 X 7.08 NET	17
20	RWD39021	APITONG, 1 X 7.08 NET	11

Eastern Wrecker Sales Inc

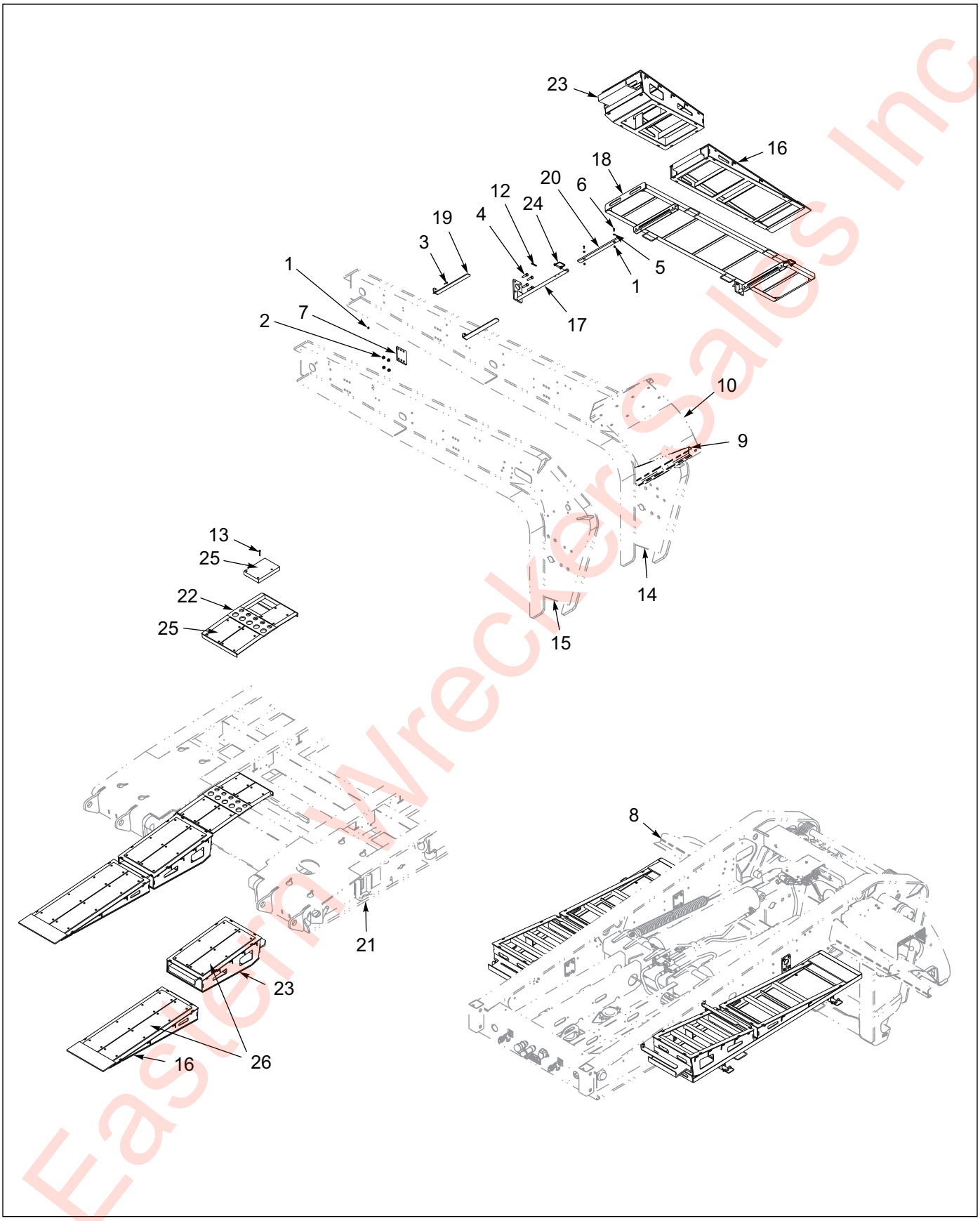

Figure 1-55: Ramp Assembly - Front Center (855E Paver)

Eastern Wrecker Sales Inc

Ramp Assembly - Front Center (855E Paver)

ITEM	PART NO.	DESCRIPTION	QTY.		
	184384	RAMP 2 SETS FRT CTR 855PAV	*		
	184383	RAMP 1 SET FRT CTR 855PAV		*	
	199038	RAMP SET 2 PIECE 855 PAV			*
1	1-512-010005-01	NUT,HEX,SLFLKG GRB 1/4-20	16	--	8
2	1-512-010005-09	NUT,HEX,SLFLKG, 1/2-13 GRB	16	--	8
3	1-654-010047-06	SCREW,HX CP 1/4-20UNCX1 GR5	8	--	4
4	1-654-010055-04	SCREW,HEX CAP,1/2-13UNCX1-3/4	16	--	8
5	1-861-010032-06	WASHER, FLAT 1/4 N ZP/CD	8	--	4
6	106955	SCREW,BHSC 1/4-20UNCX3/4	8	--	4
7	111382	MOUNT, TIE DOWN BLACK	4	--	2
8	136870	MOUNT FENDER/MUD FLAP RH 835	2	2	2
9	136871	MOUNT FENDER/MUD FLAP LH	2	2	2
10	142064	MUD FLAP POLYMER MOD 24X30	2	2	2
11	145499	PRESERVATIVE WOODGUARD **(NOT SHOWN)**	0.5	.25	.25
12	147072	PIN, SPRING SLOTTED 5/16 X 2	4	--	2
13	158732	SCREW,5/16X2-1/4ZP TORX FLOOR	88	28	44
14	171679	GOOSENECK ASSY 855 - 12'5"	REF	REF	REF
15	171685	GOOSENECK ASSY 855 - 10'9"	REF	REF	REF
16	182128	RAMP WLDMT,AL W/ WD,FRT 835PAV	2	1	1
17	182153	RAMP STORAGE WLDMT,835PAV	4	--	2
18	182156	SLIDE TRAY WLDMT, RAMP STORAGE	2	--	1
19	182159	PLATE, LOCK, RAMP STORAGE	4	--	2
20	182167	SLIDE PAD 5/8X1-1/4X18-1/4 NYL	4	--	2
21	183649	FRAME WLDMT 855PAV-23'	REF	REF	REF
22	184397	RAMP FILLR WLDMT, 855PAV	2	--	1
23	184402	RAMP WLDMT, AL REAR 855PAV	2	1	1
24	516-22PTL	RETAINING PIN MUD FLAP	4	--	2
25	RWD39000	APITONG, 1-3/8 X 7.08 NET	10	--	5
26	RWD39021	APITONG, 1 X 7.08 NET	23	12	12

Eastern Wheeler Sales Inc

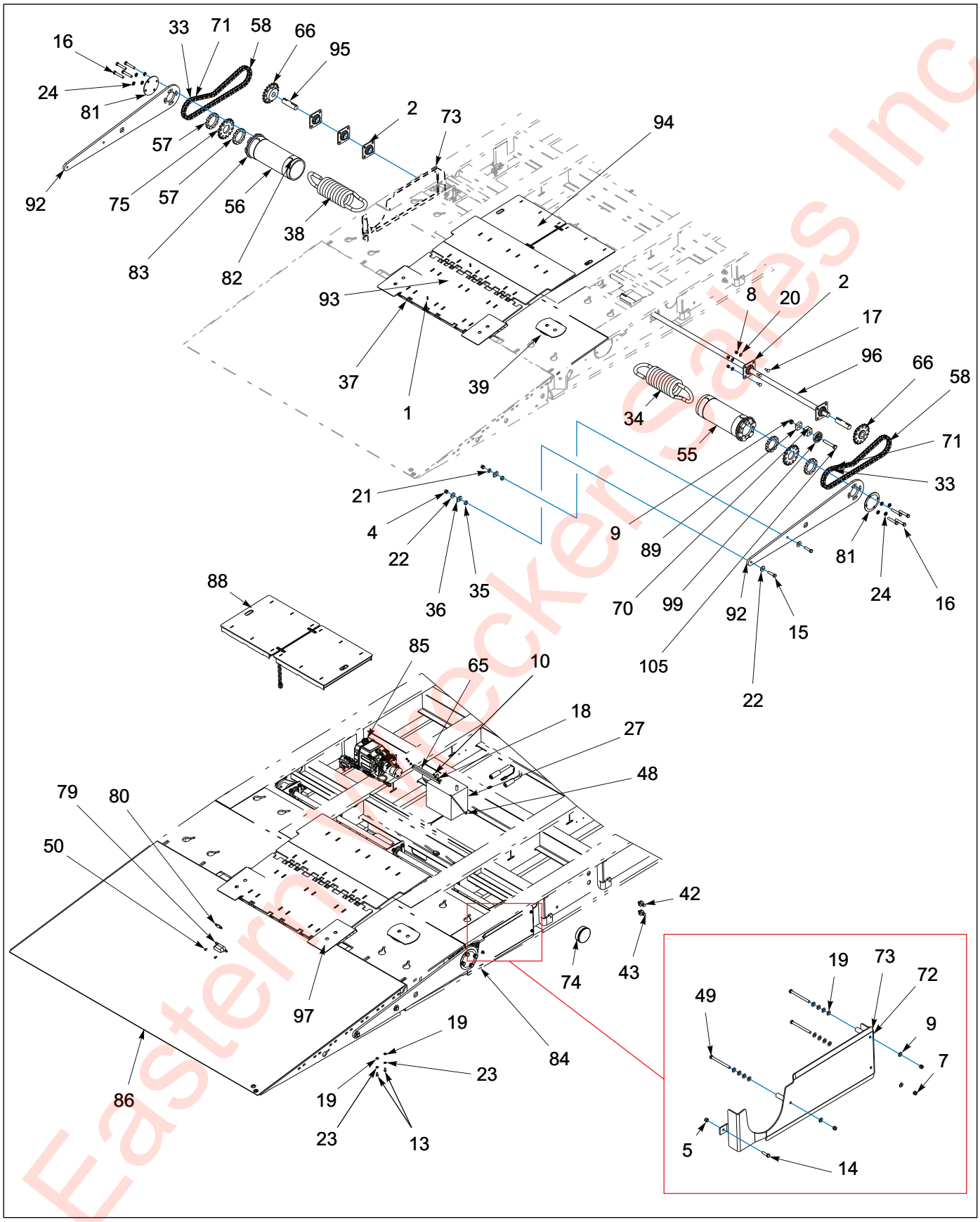

Figure 1-56: Power Ramp, 855, Construction/Paver, Full Width (1 of 3)

Eastern Wrecker Sales Inc

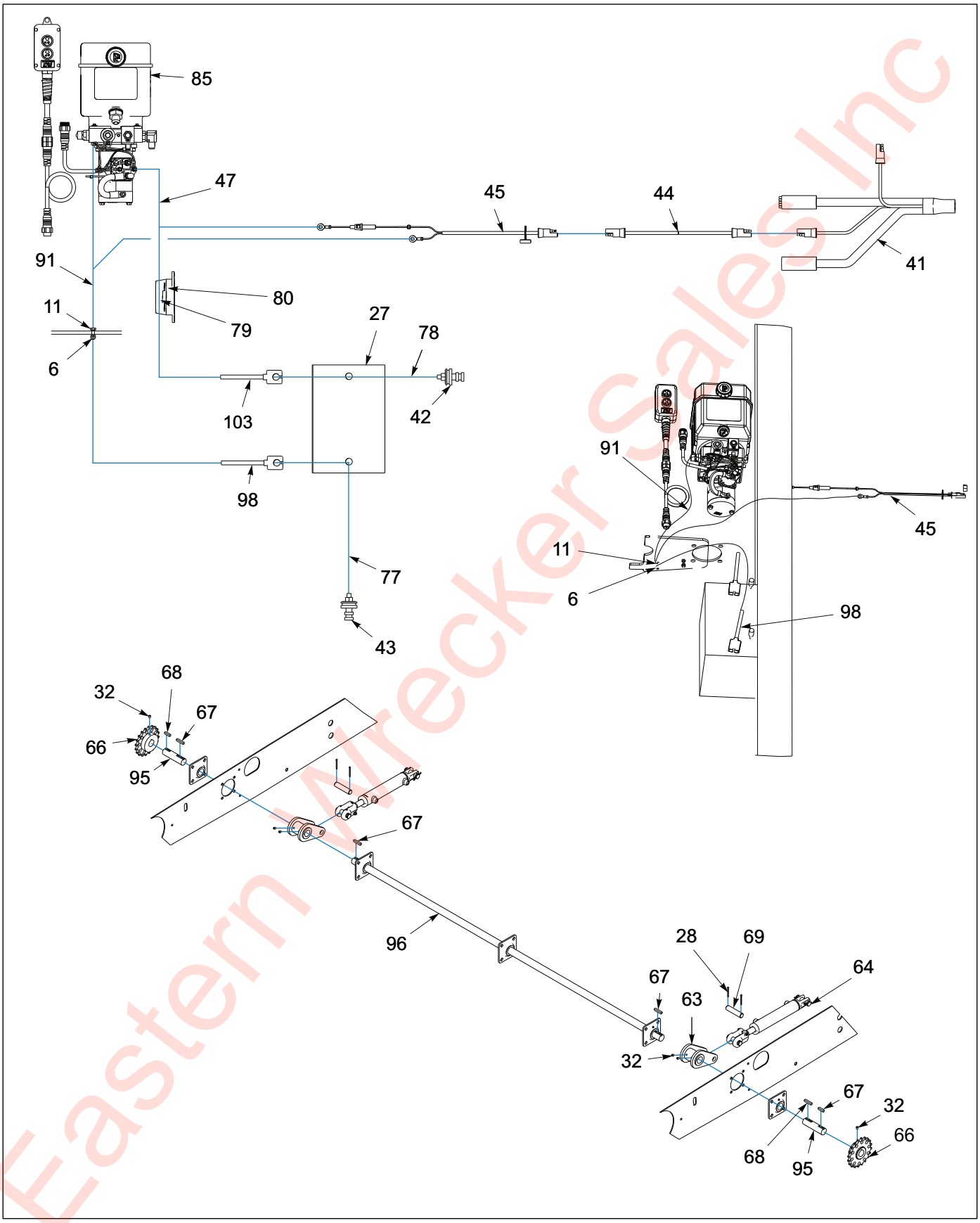

Eastern Wrecker Sales Inc

Figure 1-57: Power Ramp, 855, Construction/Paver, Full Width (2 of 3)

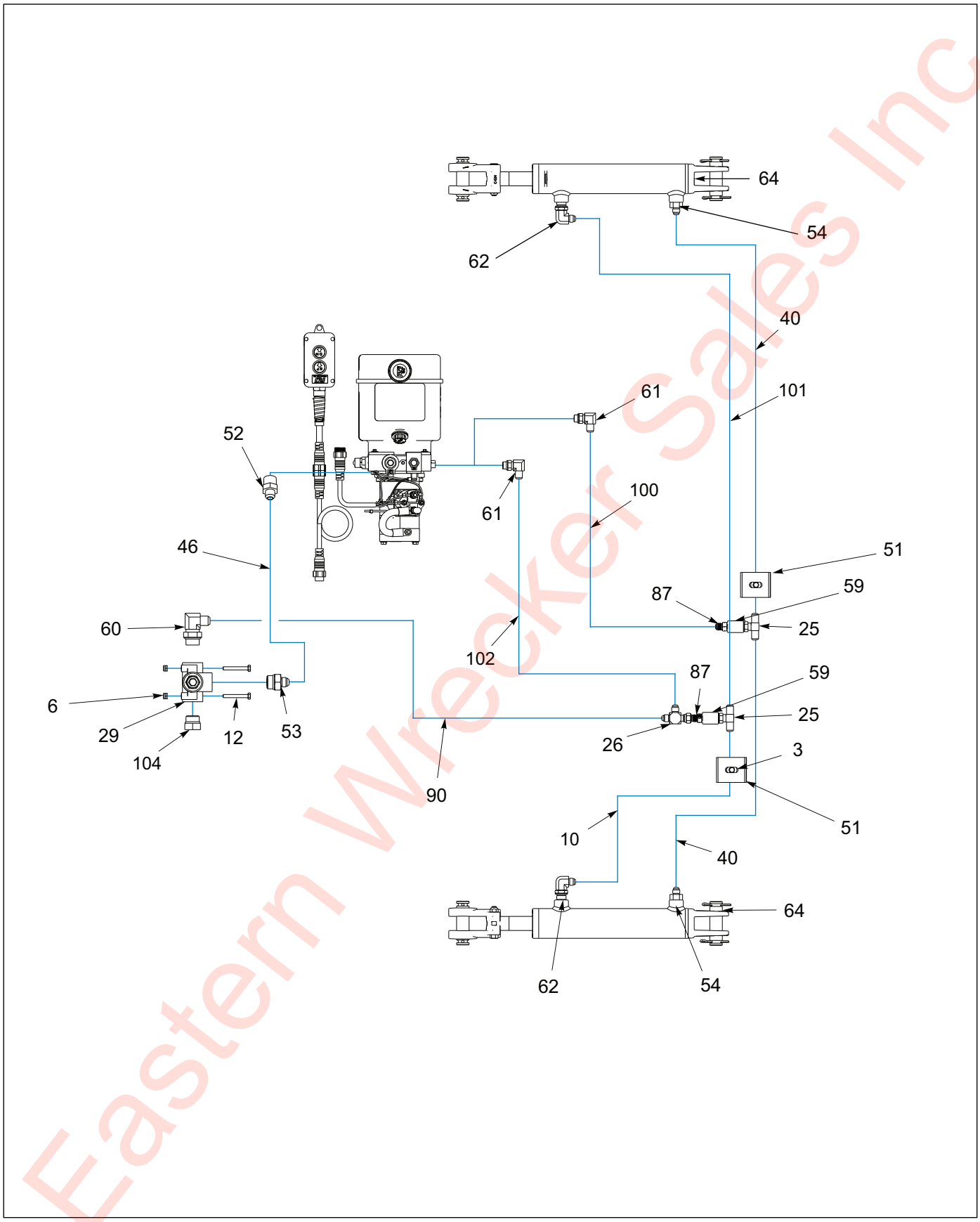

Figure 1-58: Power Ramp, 855, Construction/Paver, Full Width (3 of 3)

Eastern Wrecker Sales Inc

Power Ramp - 855

ITEM	PART NO.	DESCRIPTION	QTY.
	210060	POWER RAMP INSTALLATION, 855 CON/PAV FULL WIDTH	
1	0600-250-01000	ROLL PIN, SLTD, 1/4X1	12
2	1-065-010011	FLANGED BEARING UNIT 1-1/2 ID	5
3	1-510-010001	NUT, 3/8-16 UNC FLANGE LOCK	2
4	1-512-010002-14	NUT, HEX SLFLKG, 5/8-18 UNF, GRC	4
5	1-512-010003-14	NUT, 3/8-16UNC ESNA	2
6	1-512-010005-01	NUT, HEX, SLFLKG, 1/4-20 UNC, GRB	3
7	1-512-010005-05	NUT, HEX, SLFLKG, 3/8-16 UNC, GRB	6
8	1-512-010005-09	NUT, HEX, SLFLKG, 1/2-13 UNC, GRB	20
9	1-512-010005-15	NUT, HEX, SLFLKG, 3/4-10 UNC, GRB	2
10	1-512-010007-05	NUT, HEX, 1/4-20 UNC, GR2	4
11	1-654-010047-05	SCREW, HEX, 1/4-20UNCX7/8 GR5	1
12	1-654-010047-10	SCREW, HEX, 1/4-20UNCX2 GR5	2
13	1-654-010051-03	SCREW, HEX, 3/8-16UNCX3/4 GR5	2
14	1-654-010051-06	SCREW, HEX, 3/8-16UNCX1-1/4 GR5	2
15	1-654-010059-07	SCREW, HEX, 5/8-11UNCX2-1/2 GR5	4
16	1-654-010059-11	SCREW, HEX, 5/8-11UNCX3-1/2 GR	8
17	1-654-010070-02	SCREW, RDH, SQ NK, 1/2-13X1-1/4	20
18	1-861-010032-06	WASHER, FLAT, ZP/CD, 1/4N	2
19	1-861-010032-10	WASHER, FLAT, ZP/CD, 3/8N	32
20	1-861-010032-14	WASHER, FLAT, ZP/CD, 1/2N	20
21	1-861-010032-18	WASHER, FLAT, ZP/CD, 5/8N	2
22	1-861-010032-19	WASHER, FLAT, ZP/CD, 5/8W	6
23	1-861-010034-11	WASHER, LKGM HLCL SPR, 3/8	2
24	1-861-010034-15	WASHER, LKGM HLCL SPR, 5/8	8
25	102-1089	ADAPER, 90, #6SAE X #6JIC	2
26	102-1158	ADAPER, TEE, 6JIC-6JIC-6SWVL	1
27	108196	BATTERY, 12V, DEE CYCLE	1
28	110-4224	PIN, COTTER, 3/16 X 2	4
29	120661	VALVE, HYD PRES #12SAE, 2500PSI	1
30	122381	METAL PRIMER LOCTITE #96132 **(NOT SHOWN)**	REF
31	122382	EPOXY COATING, ANTI-SLIP **(NOT SHOWN)**	REF
32	122709	SCREW, SET, HXSKTCPPT 3/8-16X1/2	6
33	135188	MASTER CONNECTING LINK	2
34	139619	SPRING, TORSION, 835 RAMP LH	1
35	139630	BUSHING, RAMP ARM	4
36	139631	WASHER, RAMP ARM	4
37	139826	PIN, RAMP FLIPPER	6
38	139830	SPRING, TORSION, 835 RAMP RH	1
39	140927	FILLER WLDMT APPROACH 825	1
40	1422765	HOSE ASSY 3/8X44 SAE37 STR	2
41	143103	HARNESS E-CHAIN GROTE	REF
42	148581	BATTERY JUMPER POSITIVE TERMINAL	1
43	148582	BATTERY JUMPER NEGATIVE TERMINAL	1
44	150111	HARNESS 300 IN MALE/FEMALE BULLET	1
45	153032	HARNESS TRICKLE CHARGE BATTERY	1
46	153841	HOSE ASSY, 3/8, #8 JIC SWIVEL	1
47	166916	CABLE ASSY-POS 2AWG X 12 IN	1
48	1709AS669-01	J-BOLT 1/4-20 X 12 BAT-HLD-DN	2

Eastern Market Sales Inc

Power Ramp - 855

ITEM	PART NO.	DESCRIPTION	QTY.
49	173044	SCREW, HEX CAP, 3/8-16 X 4-1/2	6
50	-----	SCREW HEAD HEAD THREAD CUT	2
51	2-181-010001	CLAMP	2
52	2021-12-8S	ADAPTER, STR, #12 PIPE - #8 TUBE	1
53	202702-12-8S	ADAPTER, #12 O-RING #8 TUBE	1
54	202702-8-6S	ADAPTER, #8 O-RING TO #6 TUBE	2
55	-----	ANCHOR WLDMT LH 835 RAMP PIVOT	1
56	-----	ANCHOR WLDMT RH 835 RAMP PIVOT	1
57	204358	SPACER RAMP PIVOT ANCHOR	4
58	204363	CHAIN ASSY #80	2
59	205924	#6SAE X #6SAE COUPLING	2
60	2062-12-8S	ADAPTER, 90, 12 O-RING - 8 TUBE	1
61	2062-6-6S	ADAPER, 90, #6SAE X #6JIC	2
62	2062-8-6S	ELBOW, 90, #6SAE X #6JIC	2
63	206900	COLLAR, POWER SHAF T	2
64	206904	CYLINDER 2X8 SIDE PORT	2
65	206906	BATTERY CLAMP BRKT 835	1
66	206907	SPROCKET, 20T W/HUB	2
67	206909	KEY, 3/8X2	4
68	206910	KEY, 3/8X1-1/2	2
69	206911	PIN, CYLINDER ANCHOR 1 IN X 4-1/4 IN	2
70	206912	IDLER BUSHING SUPPORT	2
71	206913	HALF LINK, #80 CHAIN	4
72	206917	DRIVE SHIELD WLDMT LH	1
73	206919	DRIVE SHIELD WLDMT RH	1
74	208081	PLUG, PLASTIC PANEL 4-17/32	1
75	208082	SPROCKET #80 20T RAMP DRIVE ZP	2
76	208083	ATF DEXRON III **(NOT SHOWN)**	REF
77	208406	CABLE ASSY-NEG 2AWG X 60	1
78	208407	CABLE ASSY-POS 2AWG X 60	1
79	208413	FUSE AMG 300 AMP 835 RAMP	1
80	208414	FUSE HOLDER 835 RAMP	1
81	208883	COVER, RAMP PIVOT ARM	2
82	209914	BEARING, UHMW 2 IN	4
83	210034	SHIM 3/8X8 OD X 7-1/4 ID	4
84	210050	FRAME RAMP BRKT 855 FULL WIDTH PWR RAMP	REF
85	210059	POWER UNIT 12VDC 3QT .03050CU/IN	1
86	210061	RAMP WLDMT FULL WIDTH 855	1
87	210062	FITTING FLOW CONTROL 1 WAY M3.5	2
88	210084	LID ASSY CTR STORAGE	1
89	210459	IDLER BUSHING WASHER	2
90	212454	HOSE ASSY 3/8X18 #8 STR #6-90	1
91	213179	18 IN WIRE ASSY 10AWG 5/16 RINGS	1
92	213264	PIVOT ARM 855 RAMP	2
93	213265	RAMP CENTER BRIDGE WLDMT 855	1
94	213269	RAMP REAR BRIDGE WLDMT 855	1
95	213273	SHAFT, OUTER END, RAMP DRIVE	2
96	213274	SHAFT, CROSS, RAMP DRIVE	1
97	213275	FILLER WLDMT RAMP BRIDGE	2

Eastern Wrecker Sales Inc

Power Ramp - 855

ITEM	PART NO.	DESCRIPTION	QTY.
98	239-8113-36	CABLE ASSY, BATTERY NEG 36 IN	1
99	3P257	IDLER, #80 CHAIN SMOOTH	2
100	50013-114	HOSE ASSY 3/8X16, 56, 9/16JIC X ST	1
101	50013-33	HOSE ASSY 3/8X44, 56, 9/12JICXST	2
102	51134-08	HOSE ASSY 3/8X11, 06, 9/16JICXST	1
103	514-9045-12	CABLE ASSY, BATTERY POS 12 IN	1
104	900598-12S	PLUG, O-RING BOSS #12	1
105	W908406-4	SCREW, HEX, 3/4-10UNCX4-1/2 GR5	2

Eastern Wrecker Sales Inc

Flip Assemblies

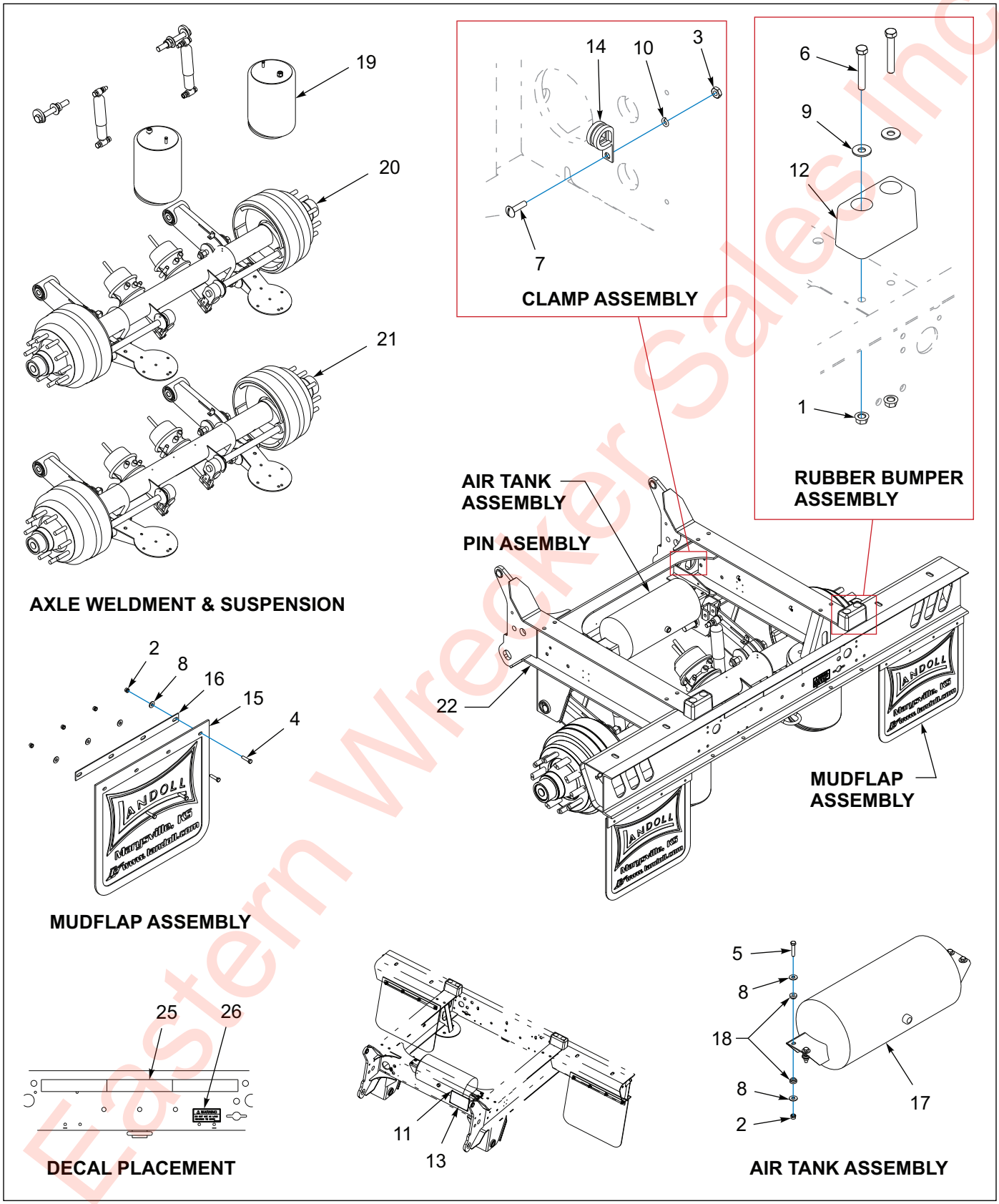

Figure 1-59: General Assembly

Eastern Wrecker Sales Inc

General Assembly

ITEM	PART NO.	DESCRIPTION	QTY.			
	198709	FLIP ASSY 835EAG-60 GROTE	*			
	198711	FLIP ASSY 800EAG-60 GROTE GALV	*			
	198717	FLIP ASSY 835EAG-50	*			
	198710	FLIP ASSY 835EAG-60 GROTE TIS		*		
	198712	FLIP ASSY 800EAG-60 GRT TISGAL		*		
	198716	FLIP ASSY 835EAG-50 TIS		*		
	198721	FLIP ASSY 835-60-120			*	
	198722	FLIP ASSY 835E-60-120 TIS				*
1	1-510-010003-09	NUT,1/2-13 FLANGE HD,SERRATED	4	4	4	4
2	1-512-010005-05	NUT, HEX, SLFLKG GRB 3/8-16	12	12	12	12
3	1-512-010007-03	NUT, HEX 10-24	1	1	1	1
4	1-654-010051-07	SCREW,HEX CAP,3/8-16UNCX1-1/2	8	8	8	8
5	1-654-010051-08	SCREW,HEX CAP,3/8-16X1-3/4 G	4	4	4	4
6	1-654-010055-10	SCREW HEX CAP 1/2-13X3-1/4GR5	4	4	4	4
7	1-656-010003051	SCREW,RH HD MACH 10-24X3/4	1	1	1	1
8	1-861-010032-11	WASHER, FLAT 3/8 W ZP/CD	16	16	16	16
9	1-861-010032-15	WASHER, FLAT 1/2 W ZP/CD	4	4	4	4
10	1-861-010034-07	WASHER,LKG,HLCL SPR, NO 10	1	1	1	1
11	12420301-017	RIVET,BLIND .156 X 1/4 GRIP	4	4	4	4
12	128874	BUMPER RUBBER 6X3X3-1/2	2	2	2	2
13	155780	TRAILER VIN PLATE B	1	1	1	1
14	239-9076-006	CLAMP 3/4,HOSE LOOM, TUBE SPT	1	1	1	1
15	3-485-010001	FLAP, MUD 21 IN	2	2	2	2
16	3-762-010017	CLAMP MUD FLAP	2	2	2	2
17	3-780-010002	TANK AIR 9.5X22.5 .5NPT PORTS	1	1	1	1
18	805-2	BUSHINGS, STEP	8	8	8	8
19	110618	SUSPENSION,FASTNR,RLU 250-9-4 **(SEE PAGE 1-96)**	1	1	1	1
20	115756	AXLE WLDMT 2516 SPG 79 327CTR	1	--	--	--
20	164590	AXLE WLDMT W/RLU 250-9-4	--	--	1	--
21	138962	AXLE WLDMT 2516 SPG 79 TIS	--	1	--	--
21	176335	AXLE WLDMT 2516 SPR 87 TIS	--	--	--	1
22	-----	FLIP WLDMT	REF	REF	REF	REF
23	3-201-010002	CONDUIT 3/8 PLASTIC FLEX **(NOT SHOWN)**	1	1	1	1
24	3-395-010001	CF FIRE HOSE **(NOT SHOWN)**	1	1	1	1
25	3-573-010377	DECAL, 2" REFLEXITE TAPE,RD/WHT	48	48	87	87
26	3-573-010496	DECAL WARNING TIE DOWN	1	1	1	1

Eastern Wecker Sales Inc

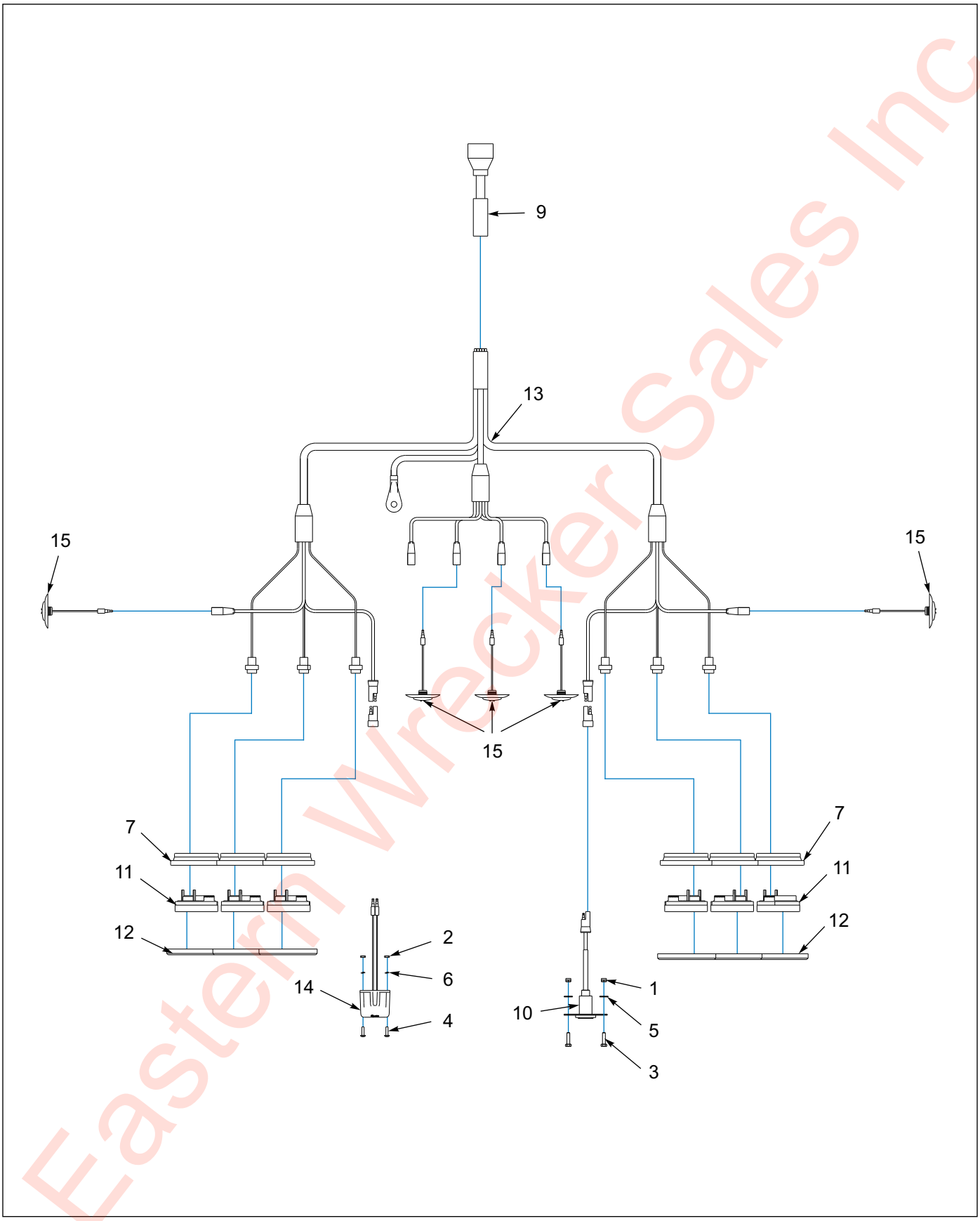

Figure 1-60: Electrical System

Eastern Wrecker Sales Inc

Electrical System

ITEM	PART NO.	DESCRIPTION	QTY.
	198709	FLIP ASSY 835EAG-60 GROTE	
	198710	FLIP ASSY 835EAG-60 GROTE TIS	
	198711	FLIP ASSY 800EAG-60 GROTE GALV	
	198712	FLIP ASSY 800EAG-60 GRT TISGAL	
	198717	FLIP ASSY 835EAG-50	
	198716	FLIP ASSY 835EAG-50 TIS	
	198721	FLIP ASSY 835-60-120	
	198722	FLIP ASSY 835E-60-120 TIS	
1	1-512-010005-01	NUT,HEX,SLFLKG GRB 1/4-20	2
2	1-512-010007-03	NUT, HEX 10-24	2
3	1-654-010047-06	SCREW,HX CP 1/4-20UNCX1 GR5	2
4	1-656-010003051	SCREW,RH HD MACH 10-24X3/4	2
5	1-861-010032-07	WASHER,FLAT 1/4 ZP	2
6	1-861-010034-07	WASHER,LKG,HLCL SPR, NO 10	2
7	143114	GROMMET OVAL GROTE **(BEFORE 01/02/20)**	6
8	143123	GREASE DIELECTRIC 4 OZ TUBE **(NOT SHOWN)**	.50
9	146898	HARNESS 7WAY PLUG G/N GROTE	1
10	150116	HARNESS ASSY RCPT 800	1
11	179902	LIGHT S/T/T RED CLEAR LENS GRT **(BEFORE 01/02/20)**	6
11	213295	LIGHT S/T/T RED CLEAR LENS GRT **(AFTER 01/02/20)**	6
12	180570	COVER CHROME OBLONG GROM **(BEFORE 01/02/20)**	6
12	213296	COVER CHROME OBLONG GROM **(AFTER 01/02/20)**	6
13	187859	HARNESS BUMPER MICRONOVA GROTE	1
14	187860	LIGHT ASSY LICENSE LED GROTE	1
15	187864	LIGHT RED LED.75CL/MK CLEAR CB	5

Eastern Wrecker Sales Inc

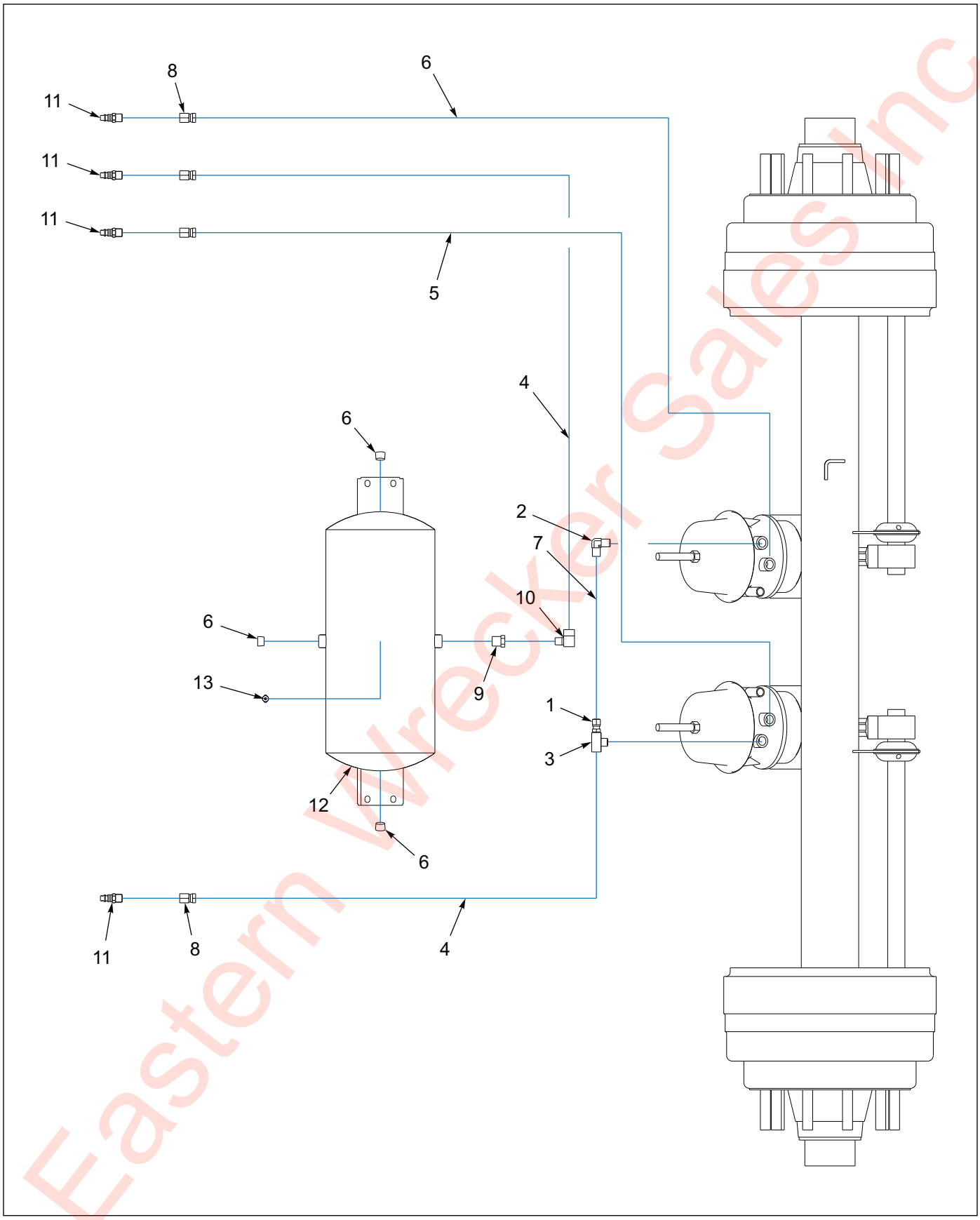

Figure 1-61: Air Brake System

Eastern Wrecker Sales Inc

Air Brake System

ITEM	PART NO.	DESCRIPTION	QTY.
	198709	FLIP ASSY 835EAG-60 GROTE	
	198710	FLIP ASSY 835EAG-60 GROTE TIS	
	198711	FLIP ASSY 800EAG-60 GROTE GALV	
	198712	FLIP ASSY 800EAG-60 GRT TISGAL	
	198717	FLIP ASSY 835EAG-50	
	198716	FLIP ASSY 835EAG-50 TIS	
	198721	FLIP ASSY 835-60-120	
	198722	FLIP ASSY 835E-60-120 TIS	
1	1-297-010007-12	FITTING AIR 3/8TUBE X 3/8NPT	1
2	1-297-010008-20	FITTING,AIR 90 3/8TUBEX3/8NPT	1
3	1-297-010017-03	FITTING,BRS PIPE M/BR TEE 3/8	1
4	1-384-010038056	HOSE ASM AIR 3/8X56,W/3/8 END	3
5	1-384-010038072	HOSE ASM AIR 3/8X72,W/3/8 END	1
6	1-560-010002-04	PLUG, PIPE, 1/2NPT	3
7	1-833-010002	TUBING NYLON 3/8 OD	AR
8	2046-6-6S	CONNECTOR HYDR 3/8TO3/8NPTF	4
9	2081-8-6S	REDUCER 1/2NPT X 3/8NPT	1
10	2089-6-6S	ADAPTER 90 3/8MPTX3/8FPT	1
11	3-220-010005	COUPLER AIR MALE 3/8-MPT	4
12	3-780-010002	TANK AIR 9.5X22.5 .5NPT PORTS	REF
13	56D4	COCK,DRAIN AIR TANK VEL036019	1

Eastern Wrecker Sales Inc

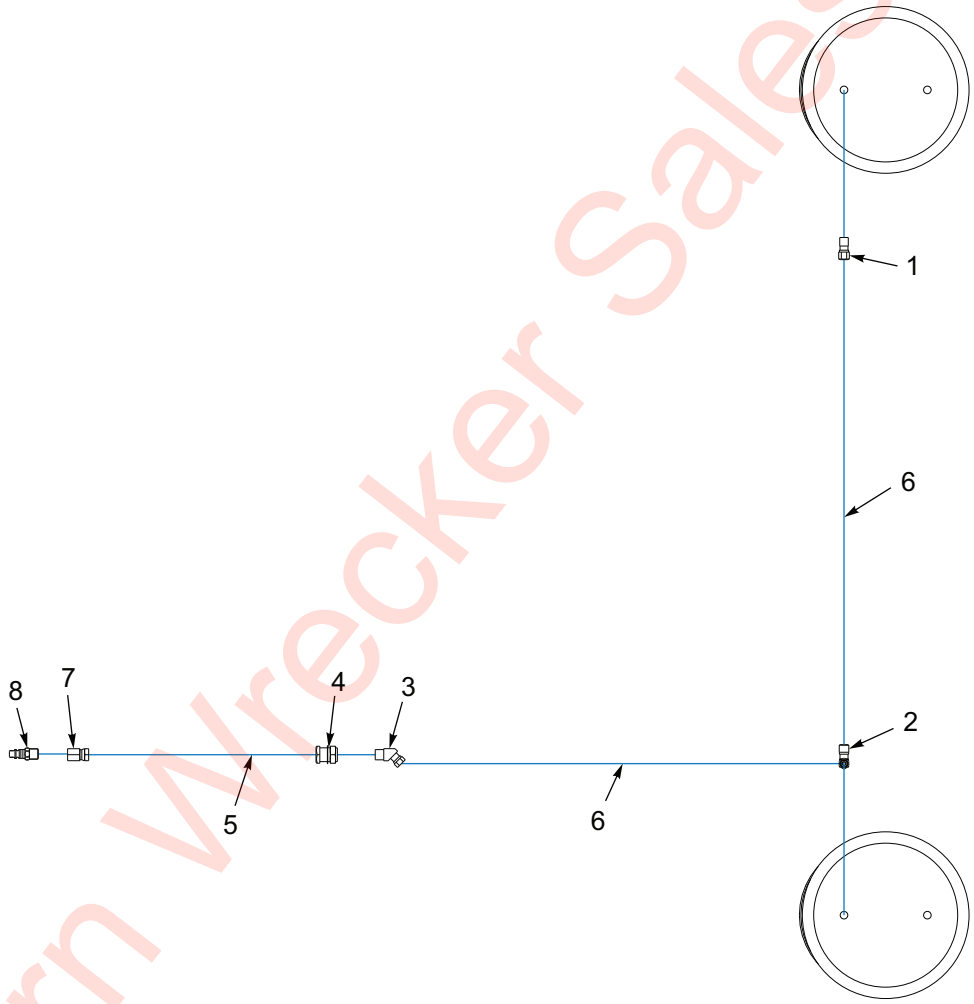

Figure 1-62: Air Ride Suspension

Eastern Wrecker Sales Inc

Air Ride Suspension

ITEM	PART NO.	DESCRIPTION	QTY.
	198709	FLIP ASSY 835EAG-60 GROTE	
	198710	FLIP ASSY 835EAG-60 GROTE TIS	
	198711	FLIP ASSY 800EAG-60 GROTE GALV	
	198712	FLIP ASSY 800EAG-60 GRT TISGAL	
	198717	FLIP ASSY 835EAG-50	
	198716	FLIP ASSY 835EAG-50 TIS	
	198721	FLIP ASSY 835-60-120	
	198722	FLIP ASSY 835E-60-120 TIS	
1	1-297-010008-18	FITTING,AIR 90 3/8TUBEX1/4NPT	1
2	1-297-010011-04	FITTING,AIR,M/RUN TEE 3/8-1/4	1
3	1-297-010013-12	FITTING AIR 45 M/ELB3/8TX3/8P	1
4	1-297-010022-03	FITTING,AIR ANCHR CPLG, 3/8NPT	1
5	1-384-010038030	HOSE ASM AIR 3/8X30,W/3/8 END	1
6	1-833-010002	TUBING NYLON 3/8 OD	9
7	2046-6-6S	CONNECTOR HYDR 3/8TO3/8NPTF	1
8	3-220-010005	COUPLER AIR MALE 3/8-MPT	1

Eastern Wrecker Sales Inc

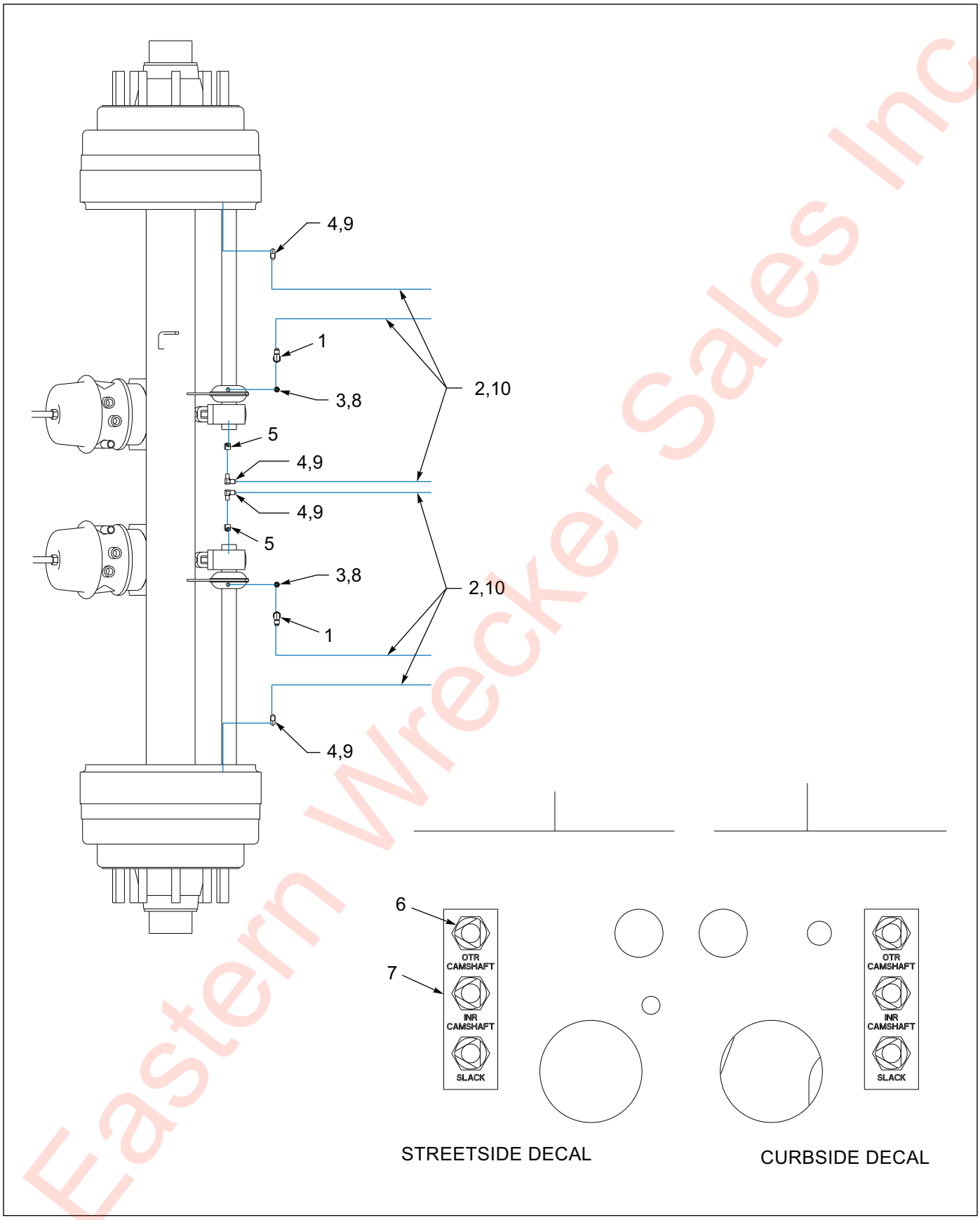

Eastern Wrecker Sales Inc

Figure 1-63: Grease Assembly

Grease Assembly

ITEM	PART NO.	DESCRIPTION	QTY.	
	198709	FLIP ASSY 835EAG-60 GROTE	*	
	198710	FLIP ASSY 835EAG-60 GROTE TIS	*	
	198711	FLIP ASSY 800EAG-60 GROTE GALV	*	
	198712	FLIP ASSY 800EAG-60 GRT TISGAL	*	
	198717	FLIP ASSY 835EAG-50		*
	198716	FLIP ASSY 835EAG-50 TIS		*
	198721	FLIP ASSY 835-60-120		*
	198722	FLIP ASSY 835E-60-120 TIS		*
1	138155	ADAPTER 90 #4 JIC	2	--
2	142441	HOSE ASSY,GREASE 1/4X45	6	--
3	161797	ADAPTER STR 5-16-18 #4JIC	2	--
4	2024-2-4S	ADAPTER, ELBOW	4	--
5	101528	ELBOW,BRASS PIPE STREET	2	2
6	142545	NUT 7/16 FOR BULKHEAD	6	6
7	142553	DECAL, GREASE TRL U/C	2	2
8	202094	ADAPTER 5/16--18X1/8NPT, F	--	2
9	202099	FITTING GREASE 90 SWIV PTC 1/8	--	6
10	202103	HOSE ASSY GREASE 1/8 X 45	--	6

Eastern Wrecker Sales Inc

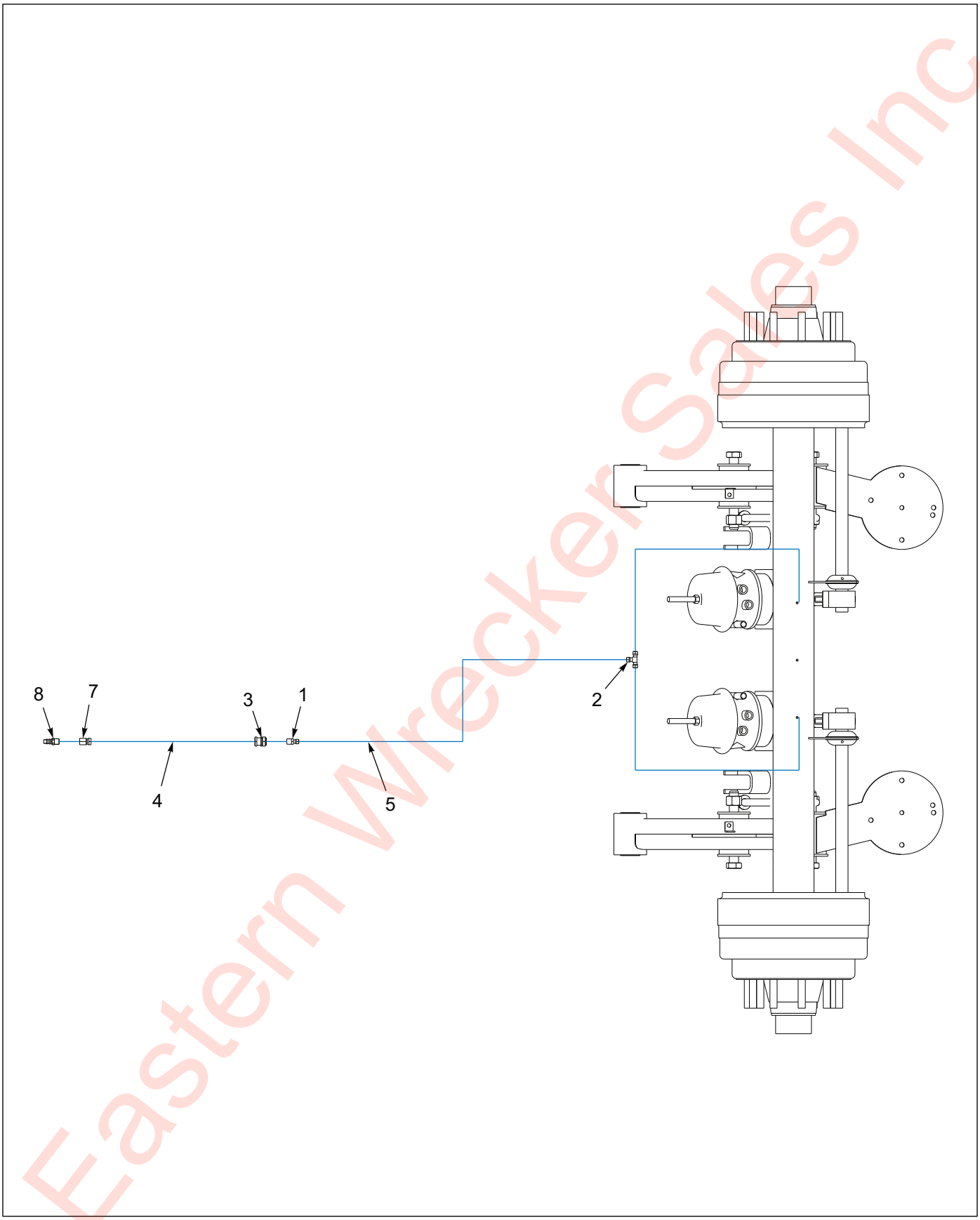

Figure 1-64: Tire Inflation System

Eastern Wrecker Sales Inc

Tire Inflation System

ITEM	PART NO.	DESCRIPTION	QTY.
	198710	FLIP ASSY 835EAG-60 GROTE TIS	
	198712	FLIP ASSY 800EAG-60 GRT TISGAL	
	198716	FLIP ASSY 835EAG-50 TIS	
	198722	FLIP ASSY 835E-60-120 TIS	
1	1-297-010007-06	FITTING,AIR,1/4TUBE TO 3/8NPT	1
2	1-297-010010-01	FITTING,AIR,UNION TEE 1/4	REF
3	1-297-010022-03	FITTING,AIR ANCHR CPLG, 3/8NPT	1
4	1-384-010038030	HOSE ASM AIR 3/8X30,W/3/8 END	1
5	1-833-010001	TUBING NYLON 1/4 OD	REF
6	157700	TIRE INFLATION SYS FLIP AXLE **(SEE PAGE 1-208)**	1
7	2046-6-6S	CONNECTOR HYDR 3/8TO3/8NPTF	1
8	3-220-010005	COUPLER AIR MALE 3/8-MPT	1

Eastern Wrecker Sales Inc

Hydraulic Flip Assemblies

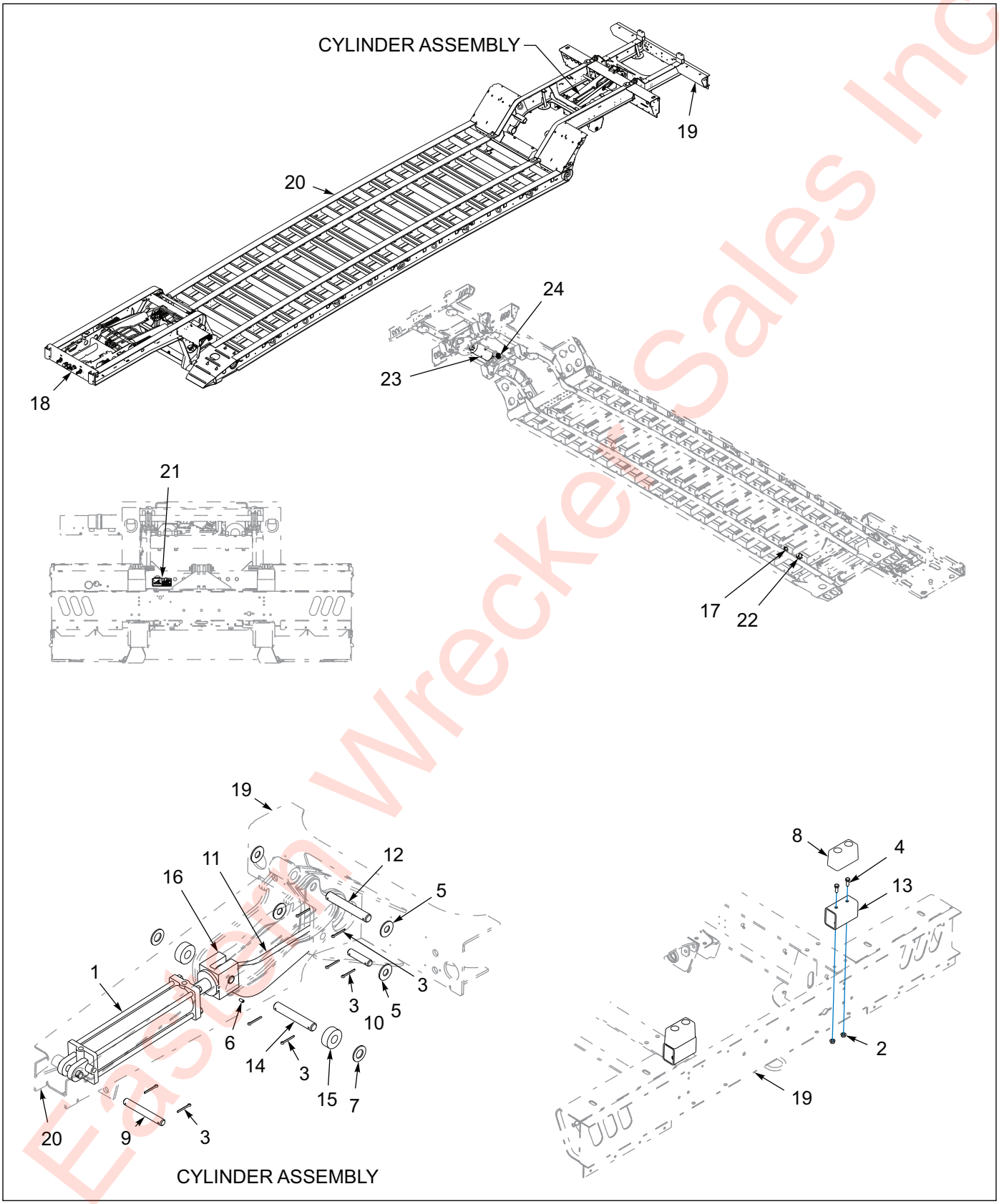

Figure 1-65: Frame & Cylinder Assembly

Eastern Wrecker Sales Inc

Frame & Cylinder Assembly

ITEM	PART NO.	DESCRIPTION	QTY.
	199995	PLUMBING FOR HYD FLIP "E"	
1	1-242-010180-3	CYLINDER,HYD 4X20STRK 3000PSI **(SEE PAGE 1-42)**	1
2	1-510-010003-09	NUT,1/2-13 FLANGE HD,SERRATED	4
3	1-557-010362-63	PIN,COTTER 1/4X2 ZP	8
4	1-654-010055-02	SCREW 1/2-13UNCX1-1/4 CP GR5	4
5	1-861-010032-25	WASHER FL 1IN WIDE ZP	4
6	114987	SCREW,SET,HX SKT,3/8-16X3/4	1
7	116100	WASHER 1-1/4 NAR FL ZP/CD	2
8	128874	BUMPER RUBBER 6X3X3-1/2	REF
9	129146	PIN HINGE BUMPER PIVOT	1
10	133458	PIN CYL ROD END	1
11	148028	LINK HYD FLIP AXLE	1
12	147883	TUBE,RECT4X2X3/16X77 NCH 4 S	REF
13	148811	MOUNT RUBBER BUMPER	2
14	150057	PIN HINGE HYD FLIP	1
15	150058	ROLLER HYD FLIP AXLE	2
16	150059	CLEVIS CYL FLIP AXLE	1
17	164435	VALVE COUNTERBALANCE 855	1
18	-----	G/N ASSY 835E 12’	REF
19	198733	FLIP WLDMT HYDR 800E-45	REF
20	199996	FRAME MOD WLDMT HYD FLIP BRKT	REF
21	2-573-010037	DECAL, DANGER, WING	1
22	200015	VALVE 3 GPM DUAL FLOW CONTROL	1
23	3-780-010002	TANK AIR 9.5X22.5 .5NPT PORTS	REF
24	758-181	VALVE TASK 4 PORT	REF

Eastern Wrecker Sales Inc

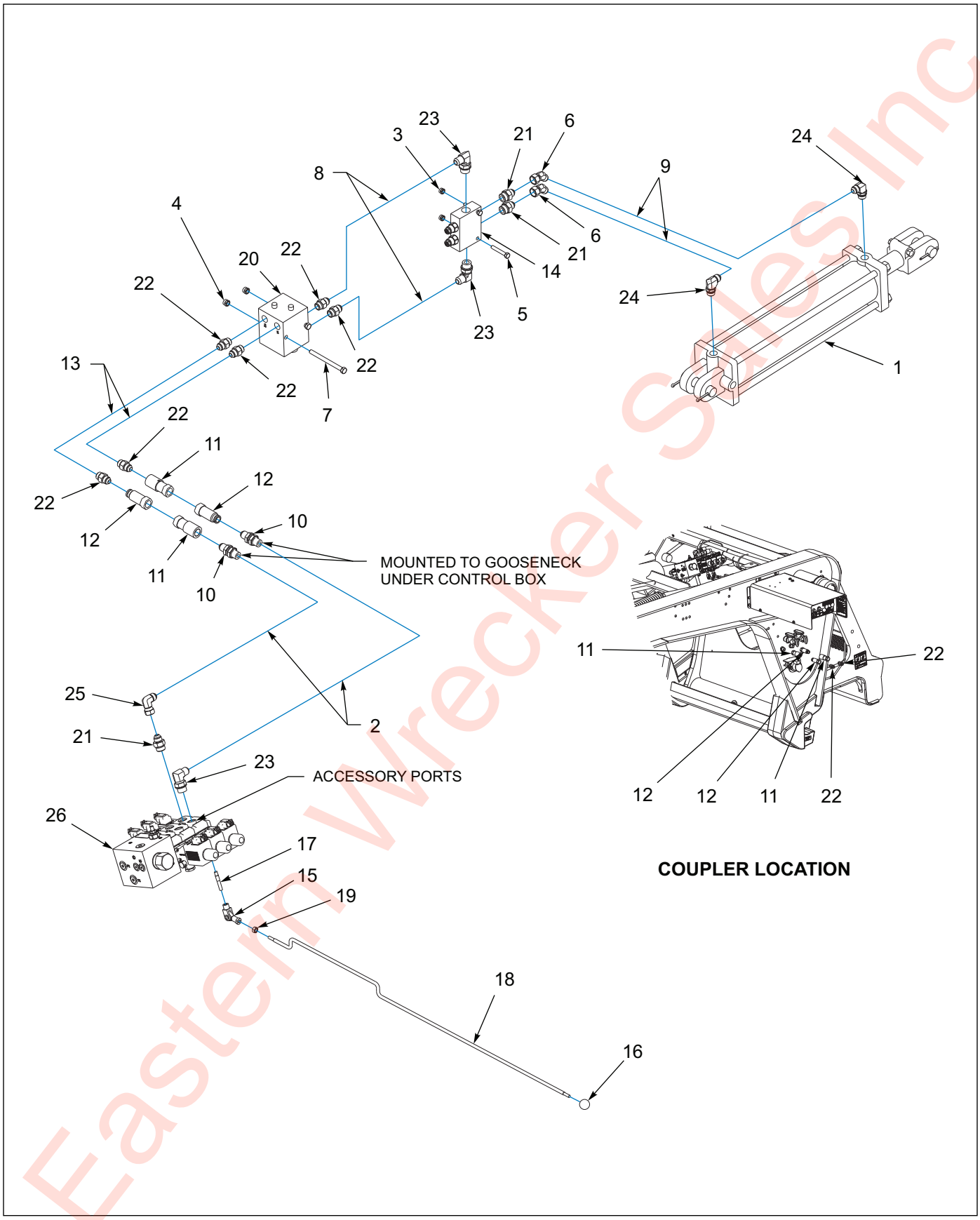

Figure 1-66: Hydraulic System

Eastern Wrecker Sales Inc

Hydraulic System

ITEM	PART NO.	DESCRIPTION	QTY.
	199995	PLUMBING FOR HYD FLIP "E"	
1	1-242-010180-3	CYLINDER,HYD 4X20STRK 3000PSI **(SEE PAGE 1-42)**	REF
2	1-397-010302064	HOSE ASSY,1/2X64,SAE 37STR-90	2
3	1-512-010005-03	NUT HEX SLFLKG GRB 5/16-18	2
4	1-512-010005-05	NUT, HEX, SLFLKG GRB 3/8-16	2
5	1-654-010049-09	SCREW,HEX CAP,5/16-18UNCX2GR5	2
6	121031	FITTING,45EL #8M X #8F 37SWVL	2
7	129698	SCREW,HXCP,3/8-16UNCX4-1/2GR5	2
8	147582	HOSE ASSY 3/8X24 #8 JIC SWIV	2
9	148036	HOSE ASSY 3/8X484 **(NOT SHOWN)**	2
10	148043	ADAPTER BLKHD #8 JIC #8 ORB	2
11	148044	COUPLER FLAT FACE FEMALE BODY	2
12	148045	COUPLER FLAT FACE MALE BODY	2
13	150083	HOSE ASSY 3/8X98 #8STR-#8-90	2
14	164435	VALVE COUNTERBALANCE 855	REF
15	186875	CLEVIS JOINT,ROD ENDS M8.1.25	1
16	186877	KNOB BLACK 1" ROUND M8X1.25THD	REF
17	193910	STUD M8-1.25X50MM DBLE THD	1
18	197610	ROD HANDLE M8X1.25 ENDS LONG	1
19	1DM8ER	NUT HEX HD M8X1.25 CL8.8	1
20	200015	VALVE 3 GPM DUAL FLOW CONTROL	REF
21	202702-10-8S	ADAPTER, #10 O-RING #8 TUBE	3
22	202702-8-8S	ADAPTER #8 O-RING TO #8 TUBE	6
23	2062-10-8S	ADAPTER,90, #10 O-RING-TUBE	3
24	2062-8-8S	ADAPTER, 90, #8 O-RING-TUBE	2
25	2071-8-8S	ADAPTER90 #8 FLR SWIVEL #8JIC	1
26	186885	VALVE, 3 SP, 35 GPM, SOLENOID **(SEE PAGE 1-36)**	1

Eastern Wrecker Sales Inc

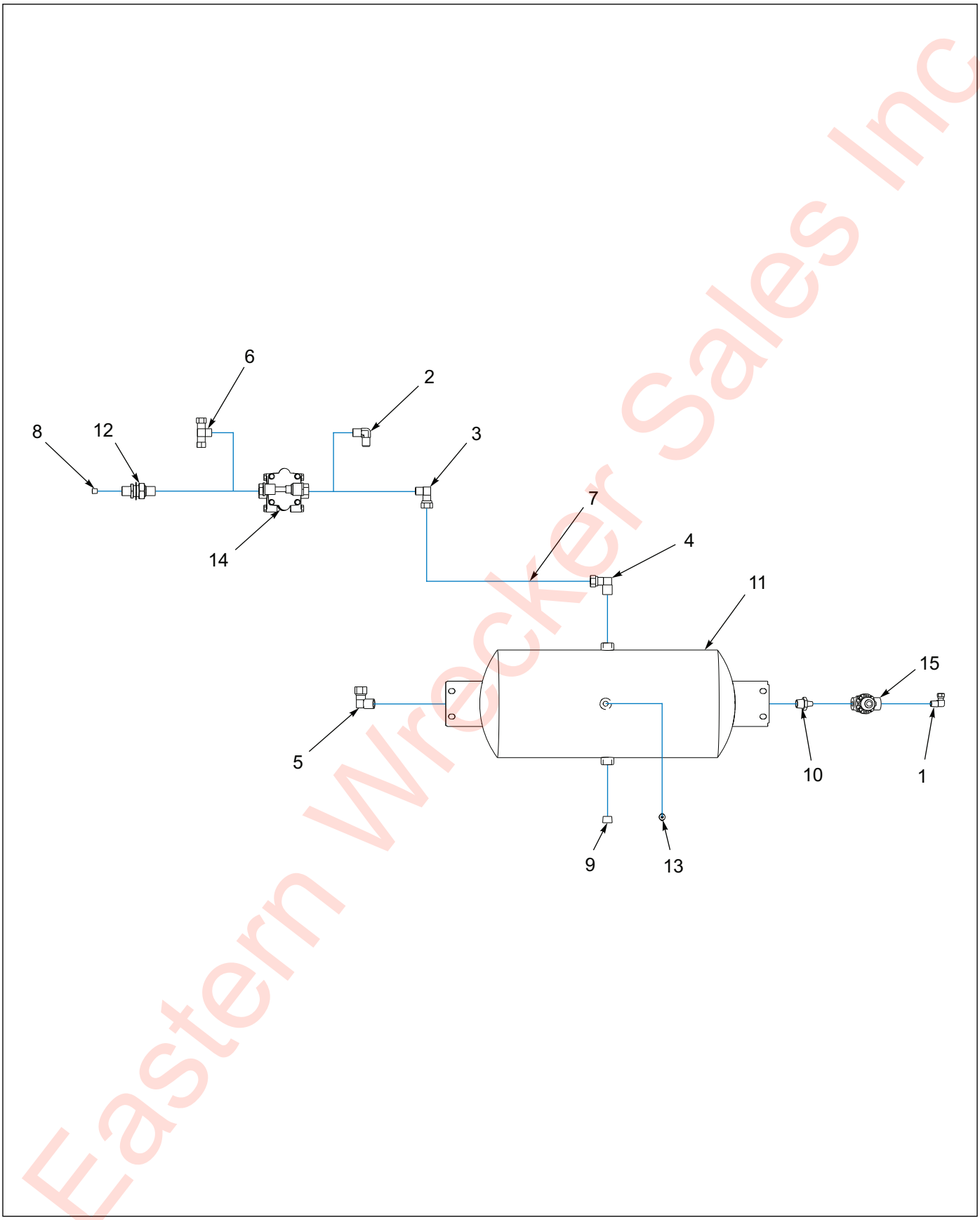

Figure 1-67: Air System

Eastern Wrecker Sales Inc

Air System

ITEM	PART NO.	DESCRIPTION	QTY.
	199995	FRAME MOD HYD FLIP PROVISION	
1	1-297-010008-07	FITTING AIR 90 1/4TUBEX1/4NPT	REF
2	1-297-010008-20	FITTING,AIR 90 3/8TUBEX3/8NPT	REF
3	1-297-010008-23	FITTING,AIR 90 1/2TUBEX3/8NPT	1
4	1-297-010008-24	FITTING,AIR 90 1/2TUBEX1/2NPT	1
5	1-297-010008-26	FITTING AIR 5/8TUBE X1/2NPT90	REF
6	1-297-010015-07	FITTING,AIR,BR TEE 3/8T-3/8P	REF
7	1-397-010302064	HOSE ASSY,1/2X64,SAE 37STR-90	REF
8	1-560-010002-02	PLUG, PIPE, 1/4NPT	1
9	1-560-010002-04	PLUG, PIPE, 1/2NPT	REF
10	2083-8-4S	NIPPLE HEX 1/2PIPE - 1/4PIPE	REF
11	3-780-010002	TANK AIR 9.5X22.5 .5NPT PORTS	REF
12	55B61	FRAME UNION	1
13	56D4	COCK,DRAIN AIR TANK VEL036019	REF
14	758-181	VALVE TASK 4 PORT	REF
15	905-54-107	BRAKE PROTECTION VALVE	REF

Eastern Wrecker Sales Inc

Swingout Installation

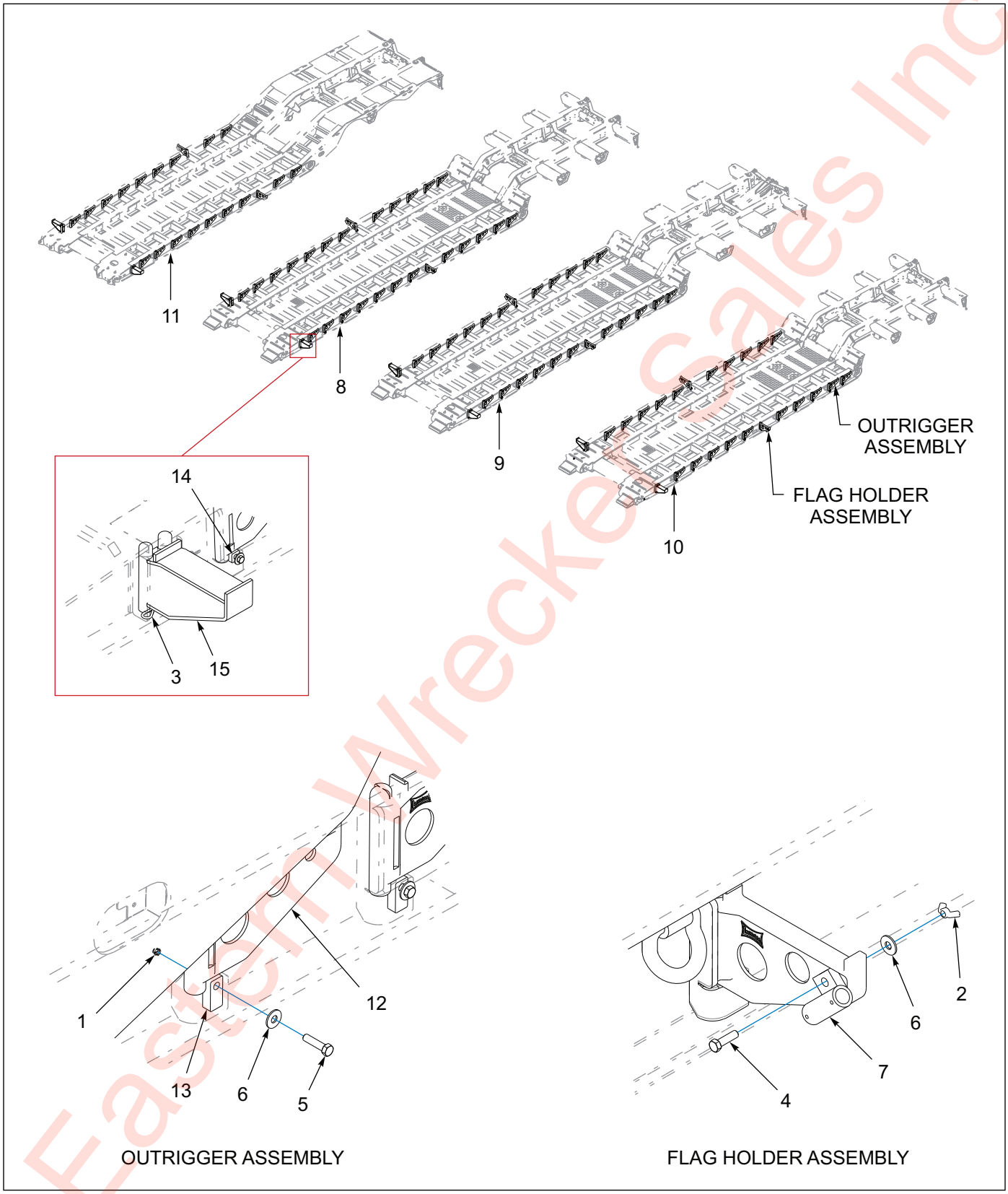

Figure 1-68: Swing Out Installation

Eastern Wrecker Sales Inc

Swing Out Installation

ITEM	PART NO.	DESCRIPTION	QTY.			
	163101	SWINGOUT O/R 855-26'	*			
	163102	SWINGOUT O/R 855-23-1/2'		*		
	168963	SWINGOUT O/R 855-25'			*	
	186329	SWING-OUT O/R 855				*
1	1-512-010005-09	NUT,HEX,SLFLKG, 1/2-13 GRB	26	22	24	20
2	1-533-010001	1/2-13 WING NUT 20 TYPE A	2	2	2	2
3	1-557-010014	PIN, HAIR 1/4 DIA	2	2	2	2
4	1-654-010055-04	SCREW,HEX CAP,1/2-13UNCX1-3/4	2	2	2	2
5	1-654-010055-05	SCREW,HEX CAP,1/2-13UNCX2 GR5	26	22	24	20
6	1-861-010032-15	WASHER, FLAT 1/2 W ZP/CD	28	24	26	22
7	114741	HOLDER FLAG WLDMT	2	2	2	2
8	163065	FRAME WLDMT 855-26	REF	--	--	--
9	163517	FRAME WLDMT 855-23-1/2	--	REF	--	--
10	168941	FRAME WLDMT 855-25 HYD FLIP	--	--	REF	--
11	186300	FRAME WLDMT 855PAV-20.5'	--	--	--	REF
12	167-0022	OUTRIGGER FOR 10 CHANNEL	26	22	24	20
13	182009	STOP BLOCK O/R	24	20	22	18
14	184391	STOP BLOCK O/R 400	2	2	2	2
15	3-311-015001	OUTRIGGER WLDMT FRONT	2	2	2	2

Eastern Wrecker Sales Inc

Spreader Assembly

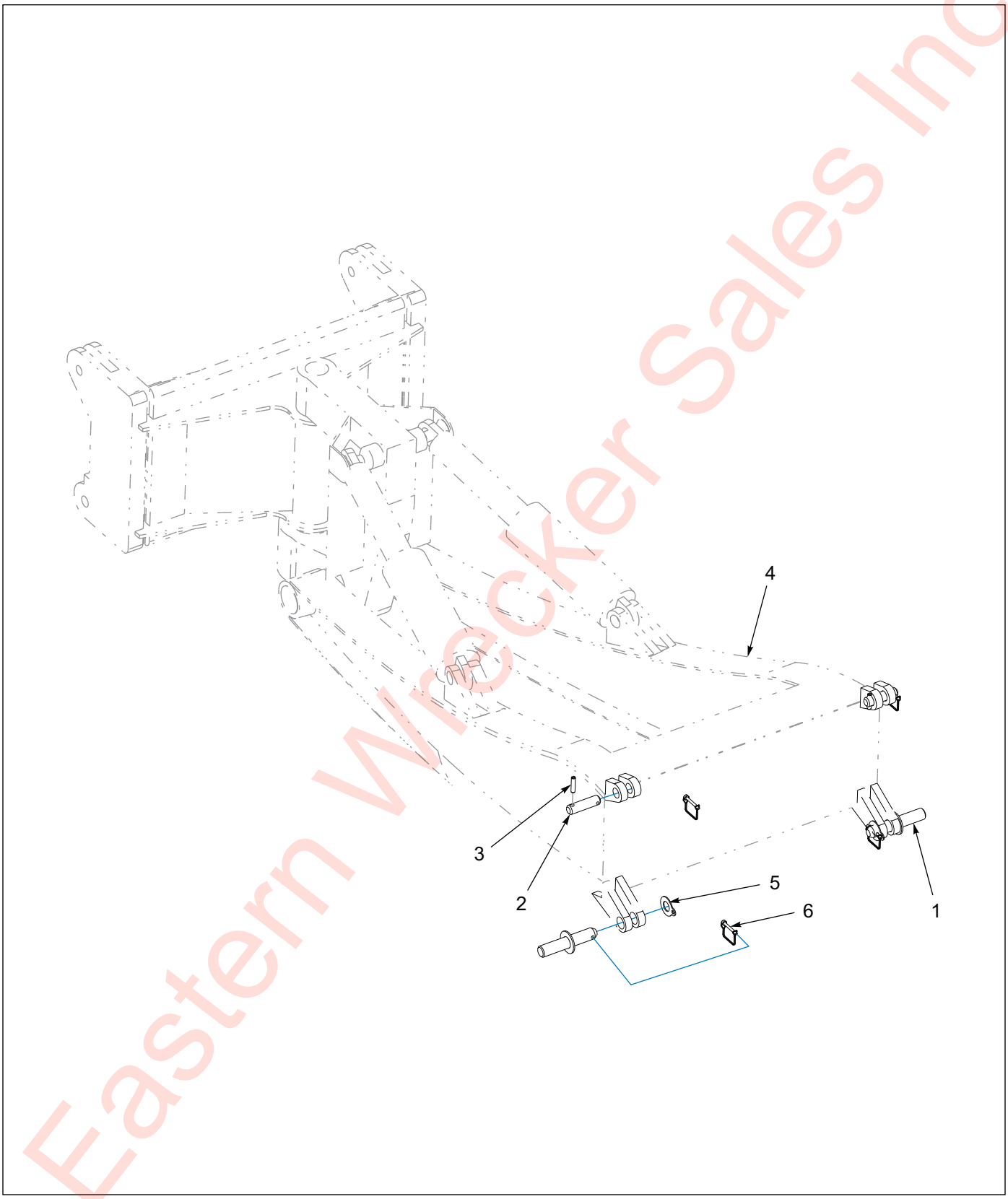

Figure 1-69: Spreader Assembly - 855E HD

Eastern Wrecker Sales Inc

Spreader Assembly - 855E HD

ITEM	PART NO.	DESCRIPTION	QTY.
	172435	SPREADER ASSEMBLY	
1	114712	PIN WELDMENT, FLIP LOWER	2
2	128873	SPREADER NITRO FOR FLIP	2
3	141251	PIN, UPPER SPREADER NITRO	2
4	172425	PIN, LOWER SPREADER NITRO	1
5	172436	WASHER, BOOSTER	2
6	516-22PTL	PIN, MUD FLAP	4

Eastern Wrecker Sales Inc

Stinger Assembly

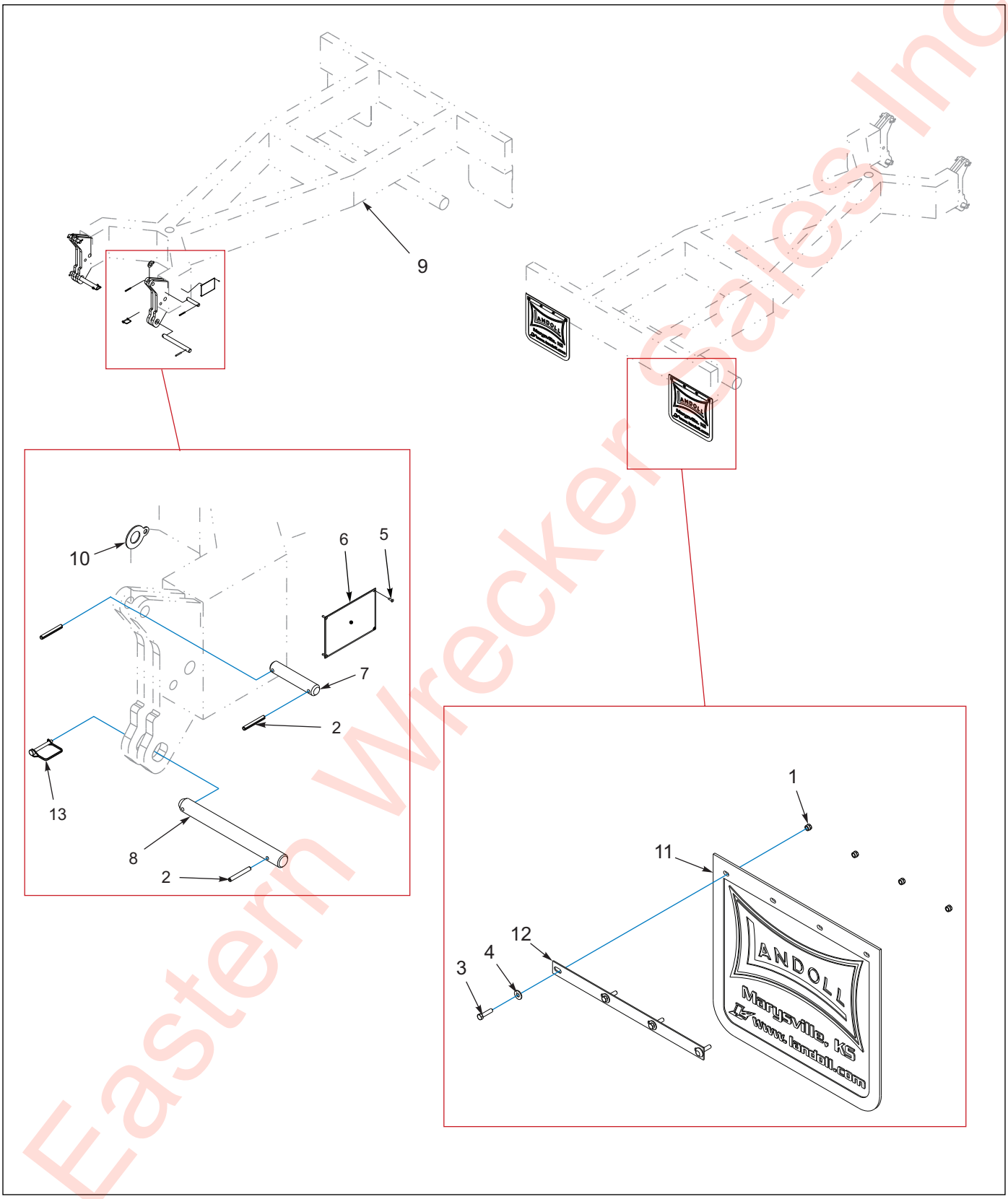

Figure 1-70: Stinger Assembly - 855E HD

Eastern Wrecker Sales Inc

Stinger Assembly - 855E HD

ITEM	PART NO.	DESCRIPTION	QTY.
	172434	STINGER ASSEMBLY	
1	1-512-010005-05	NUT, HEX LOCK 3/8-16 GRB	8
2	1-647-010004259	ROLL PIN, SLOTTED 3/8 X 3	6
3	1-654-010051-07	SCREW, HEX HEAD CAP 3/8-16 X 1-1/2 GR5	8
4	1-861-010032-11	WASHER, FLAT 3/8W	8
5	12420301-017	RIVET, BLIND .156 X 1/4 GRIP	4
6	155780	INFORMATION FOR TRL VIN	1
7	172426	PIN, UPPER SPREADER NITRO	2
8	172427	PIN, LOWER SPREADER NITRO	2
9	172428	STINGER NITRO W/ AXLE	1
10	172436	WASHER, BOOSTER	2
11	3-485-010001	MUD FLAP, 21”	2
12	3-762-010017	CLAMP, MUD FLAP	2
13	516-22PTL	PIN, MUD FLAP	2

Eastern Wrecker Sales Inc

Support Boom Assembly

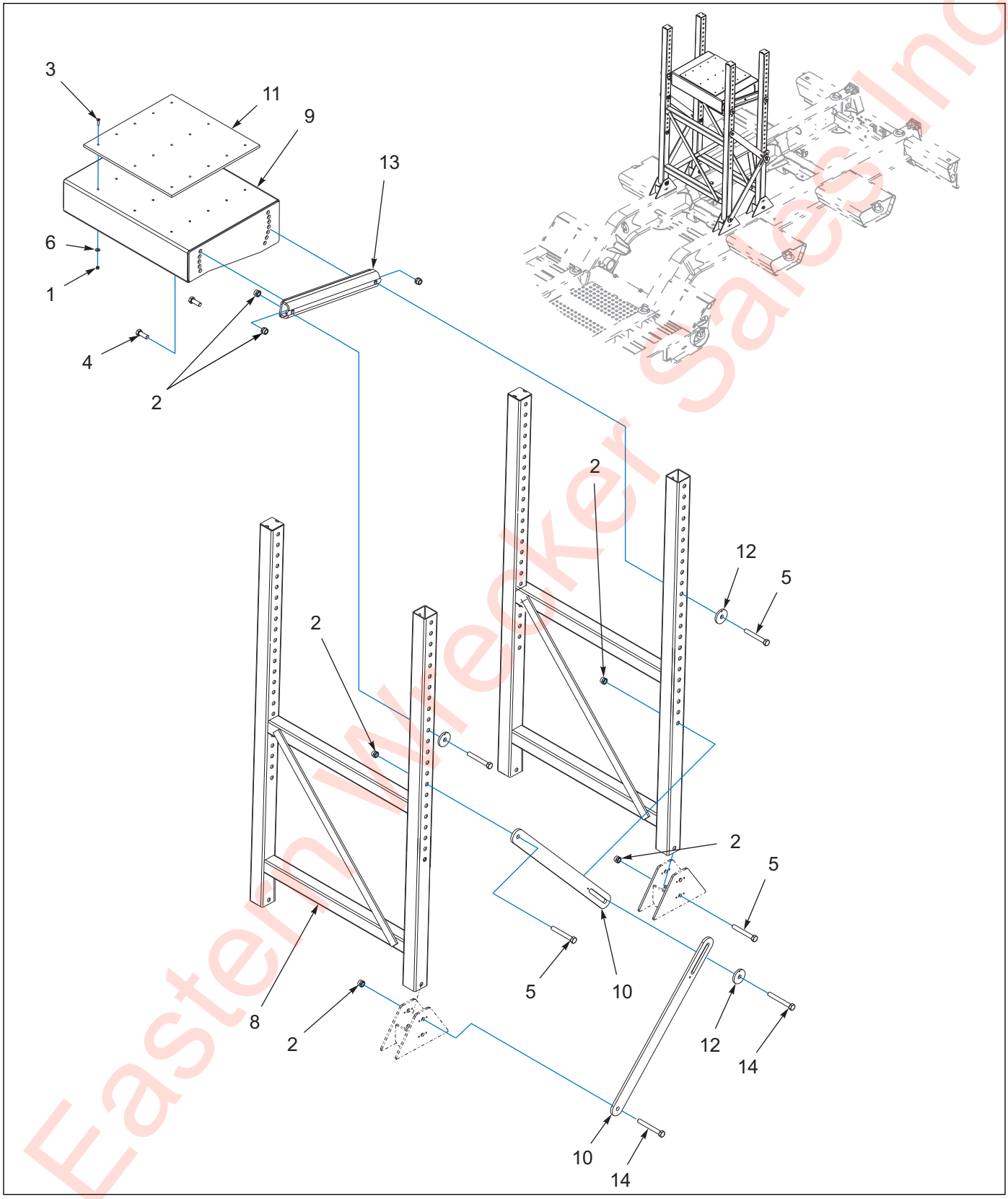

Figure 1-71: Support Boom Assembly - 855E HD

Eastern Wrecker Sales Inc

Support Boom Assembly - 855E HD

ITEM	PART NO.	DESCRIPTION	QTY.
	173664	SUPPORT BOOM ASSEMBLY	
1	1-512-010005-03	NUT, HEX LOCK 5/16-18 GRB	15
2	1-512-010005-15	NUT, HEX LOCK 3/4-10 GRB	16
3	1-654-010034-06	SCREW, HEX SOCKET CTSK 5/16-18 X 1-1/4	15
4	1-654-010061-05	SCREW, HEX HEAD CAP 3/4-10 X 2 GR5	4
5	1-654-010061-16	SCREW, HEX HEAD CAP 3/4-10 X 5-1/2 GR5	8
6	1-861-010032-09	WASHER, FLAT 5/16W	15
7	-----	BOOM SUPPORT WELDMENT	REF
8	173662	TUBE UPRIGHT BOOM WELDMENT	2
9	173666	SUPPORT PLATFORM BOOM WELDMENT	1
10	173669	BRACE PLATFORM	4
11	173670	PAD RUBBER PLATFORM	1
12	173672	WASHER, PLATFORM 3/4	6
13	174645	SUPPORT PLATFORM WELDMENT	2
14	W908409-4	SCREW, HEX HEAD CAP 3/4-10 X 6 GR5	4

Eastern Wrecker Sales Inc

Cover Assembly

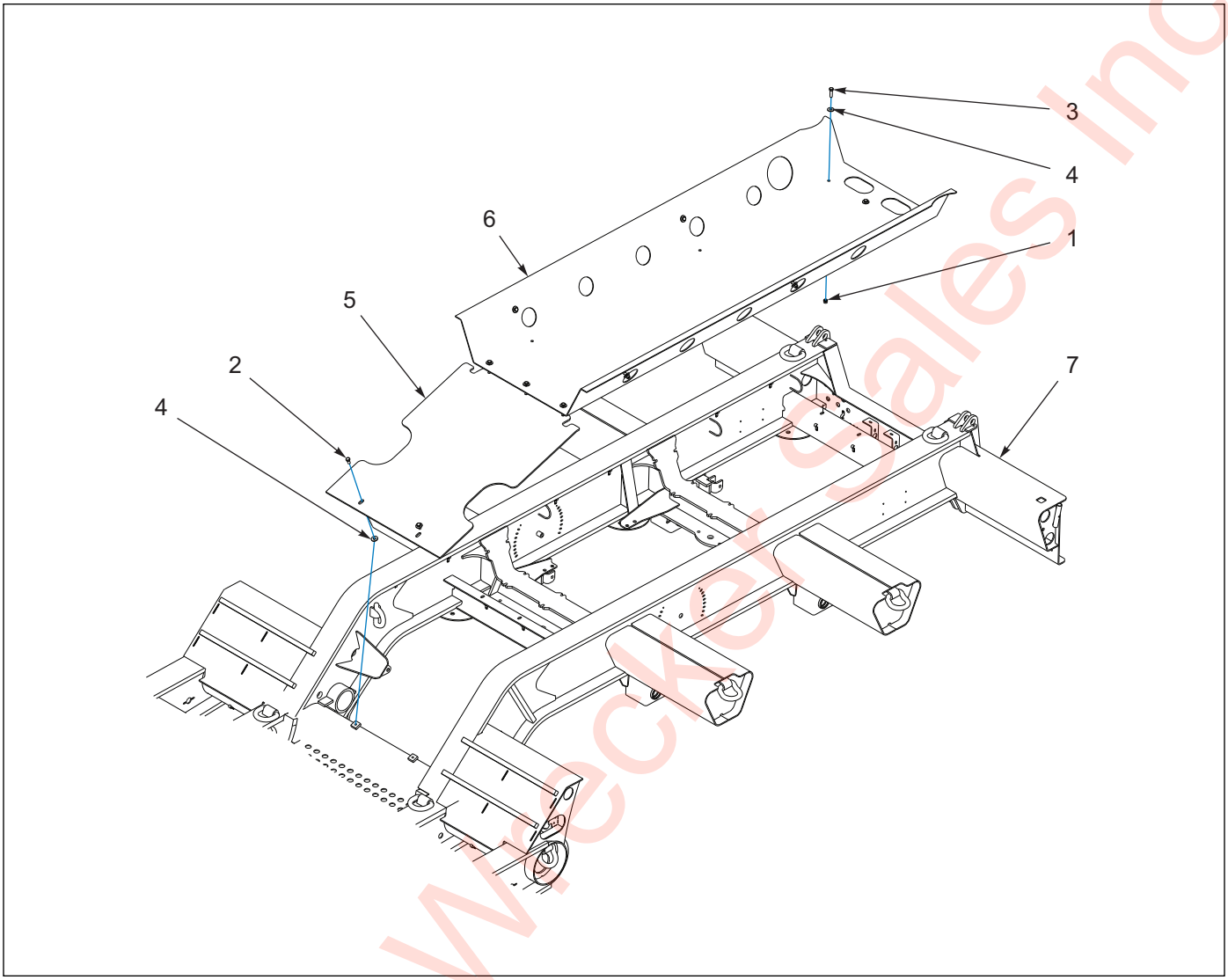

Figure 1-72: Cover Boom Trough Assembly

Cover Boom Trough Assembly

ITEM	PART NO.	DESCRIPTION	QTY.
	163516	COVER BOOM TROUGH 855-50 ASSY	
	162787	COVER BOOM TROUGH 855-54	
	169644	COVER BOOM TROUGH 855-60	
1	1-512-010005-09	NUT,HEX,SLFLKG, 1/2-13 GRB	10
2	1-654-010055-01	SCR,HX CP 1/2-13UNCX1 GR5	2
3	1-654-010055-04	SCREW,HEX CAP,1/2-13UNCX1-3/4	10
4	1-861-010032-15	WASHER, FLAT 1/2 W ZP/CD	22
5	162046	COVER, FRONT TROUGH	1
6	163100	COVER, BOOM TROUGH **(USED W/ 163516)**	1
6	162045	COVER, BOOM TROUGH **(USED W/ 162787)**	1
6	169645	COVER, BOOM TROUGH **(USED W/ 169644)**	1
7	-----	FRAME WELDMENT	REF

Eastern Wrecker Sales Inc

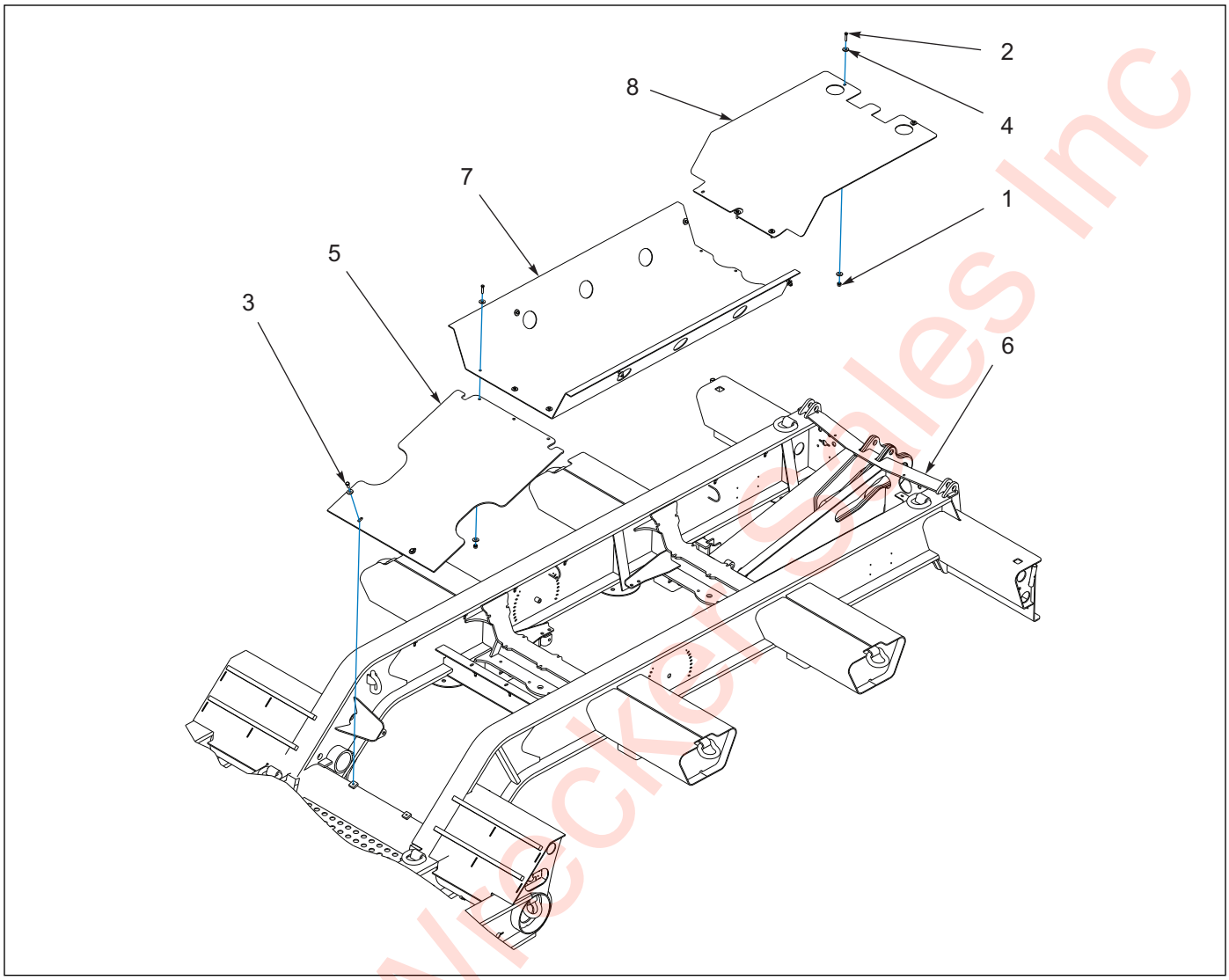

Figure 1-73: Cover Boom Trough Assembly - Flip

Cover Boom Trough Assembly - Flip

ITEM	PART NO.	DESCRIPTION	QTY.
	164108	COVER BOOM TROUGH ASSEMBLY, FLIP (855-54)	
	168962	COVER BOOM TROUGH ASSEMBLY, FLIP (855-60)	
1	1-512-010005-09	NUT, HEX LOCK 1/2-13 GRB	12
2	1-654-010055-04	SCREW, HEX HEAD CAP 1/2-13 X 1-3/4 GR5	2
3	1-654-010055-01	SCREW, HEX HEAD CAP 1/2-13 X 1 GR5	2
4	1-861-010032-15	WASHER, FLAT 1/2W	22
5	162046	COVER, FRONT TROUGH	1
6	-----	FRAME WELDMENT	REF
7	164109	COVER, BOOM TROUGH MID **(USED W/ 164108)**	1
	168961	COVER, BOOM TROUGH MID **(USED W/ 168962)**	1
8	164110	COVER, BOOM TROUGH REAR	1

Eastern Wholesale Inc

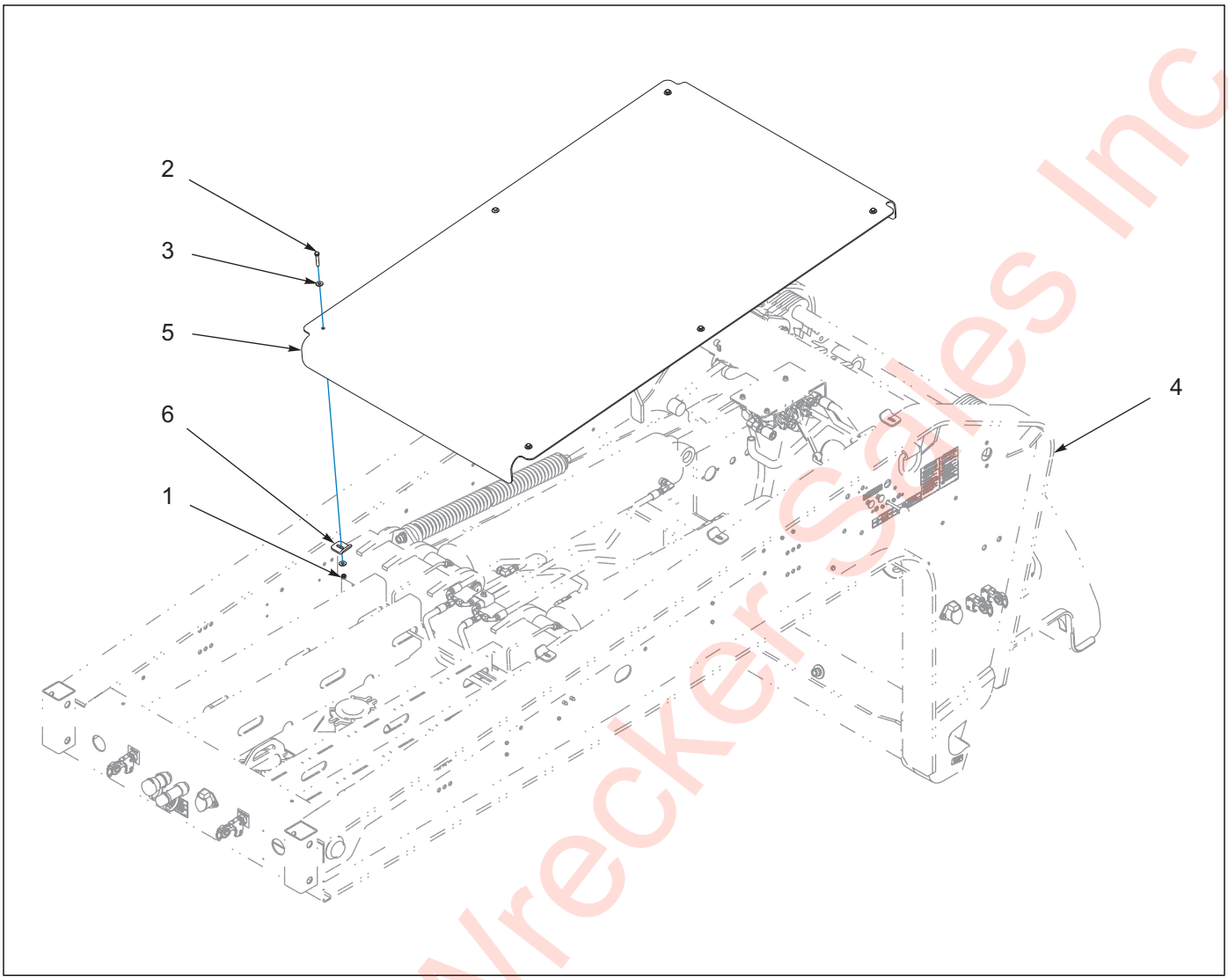

Figure 1-74: Gooseneck Cover Assembly - 855E

Gooseneck Cover Assembly - 855E

ITEM	PART NO.	DESCRIPTION	QTY.
	162485	GOOSENECK COVER ASSEMBLY	
1	1-512-010005-05	NUT, HEX LOCK 3/8-16 GRB	6
2	1-654-010051-09	SCREW, HEX HEAD CAP 3/8-16 X 2 GR5	6
3	1-861-010032-11	WASHER, FLAT 3/8W	12
4	-----	GOOSENECK ASSEMBLY, 13FT	REF
5	162483	COVER, GOOSENECK TOP ALUMINUM	1
6	162484	CLAMP, GOOSENECK COVER	4

Eastern Wrecker Sales Inc

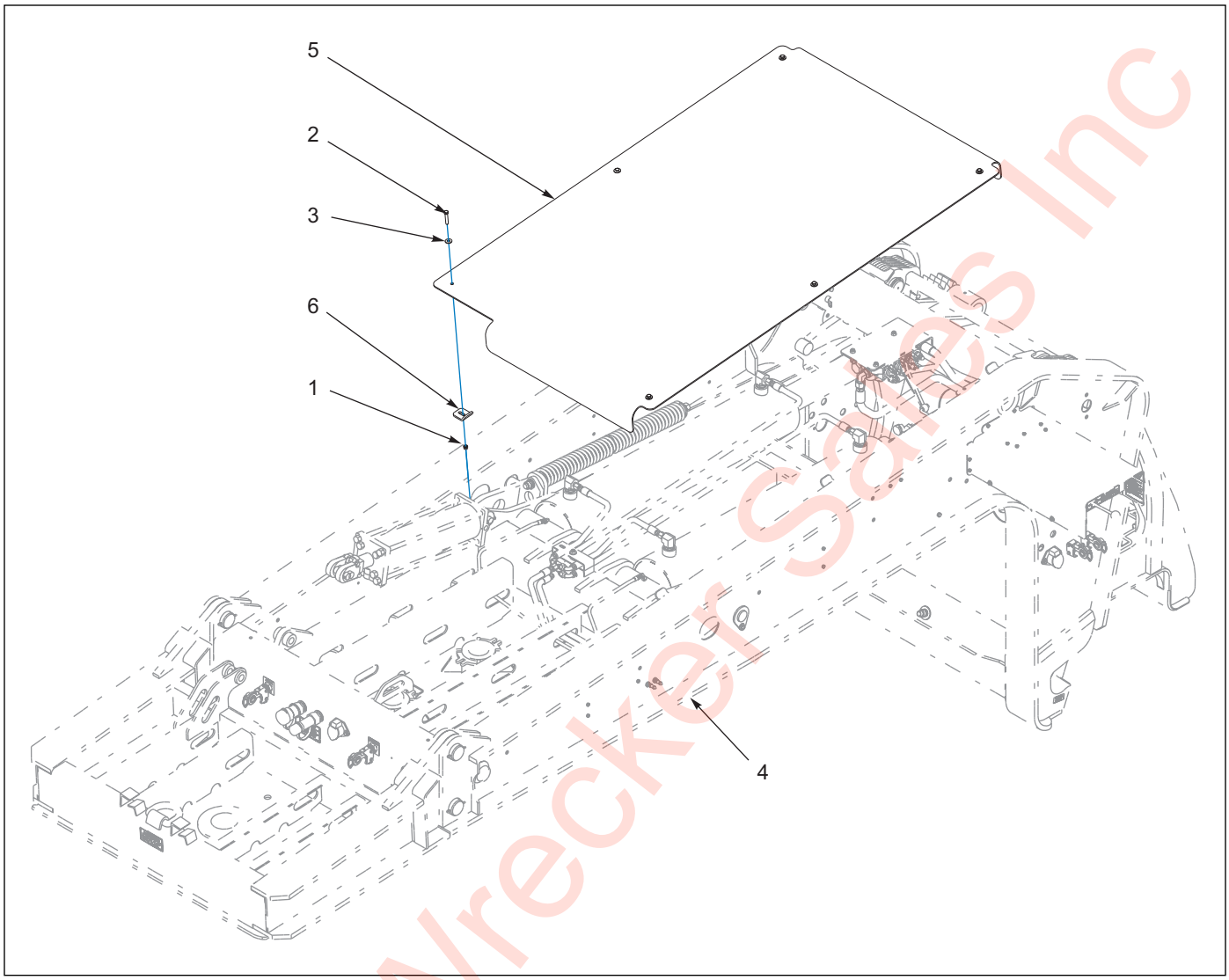

Figure 1-75: Gooseneck Cover Assembly - 855E HD

Gooseneck Cover Assembly - 855E HD

ITEM	PART NO.	DESCRIPTION	QTY.
	174665	GOOSENECK COVER ASSEMBLY	
1	1-512-010005-05	NUT, HEX LOCK 3/8-16 GRB	6
2	1-654-010051-09	SCREW, HEX HEAD CAP 3/8-16 X 2 GR5	6
3	1-861-010032-11	WASHER, FLAT 3/8W	12
4	-----	GOOSENECK ASSEMBLY	REF
5	174664	COVER, GOOSENECK TOP HYD FLIP EXT	1
6	162484	CLAMP, GOOSENECK COVER	6

Eastern Wrecker Sales Inc

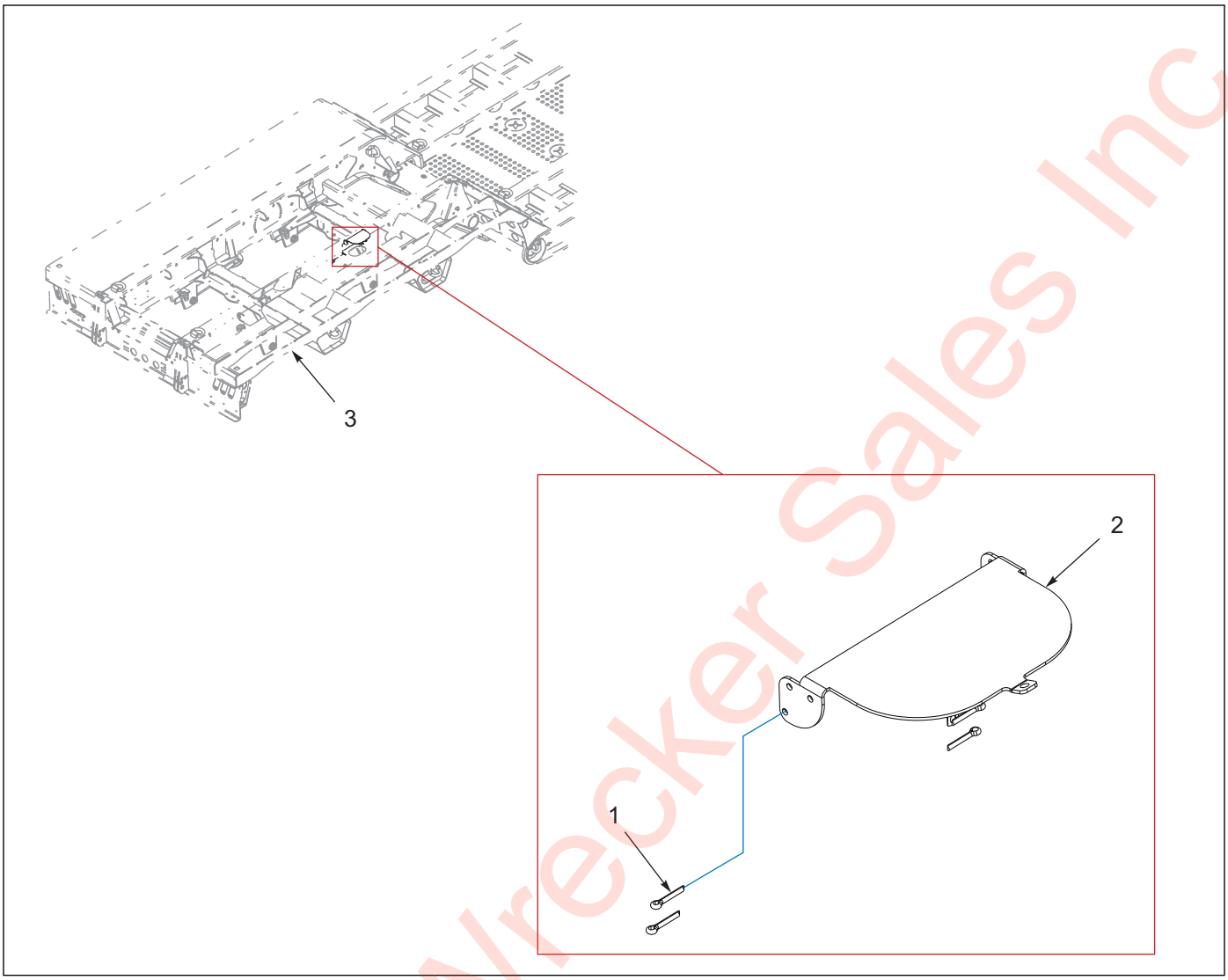

Figure 1-76: Trunnion Cover Installation

Trunnion Cover Installation

ITEM	PART NO.	DESCRIPTION	QTY.
	168972	COVER INSTALLATION, TRUNNION	
	165163	COVER INSTALLATION, NON-LOAD-BEARING	
1	1-557-010362-49	PIN, COTTER 3/16 X 1	4
2	163589	LID COVER OPENING	1
3	----	FRAME WELDMENT	REF

Eastern Wrecker Sales Inc

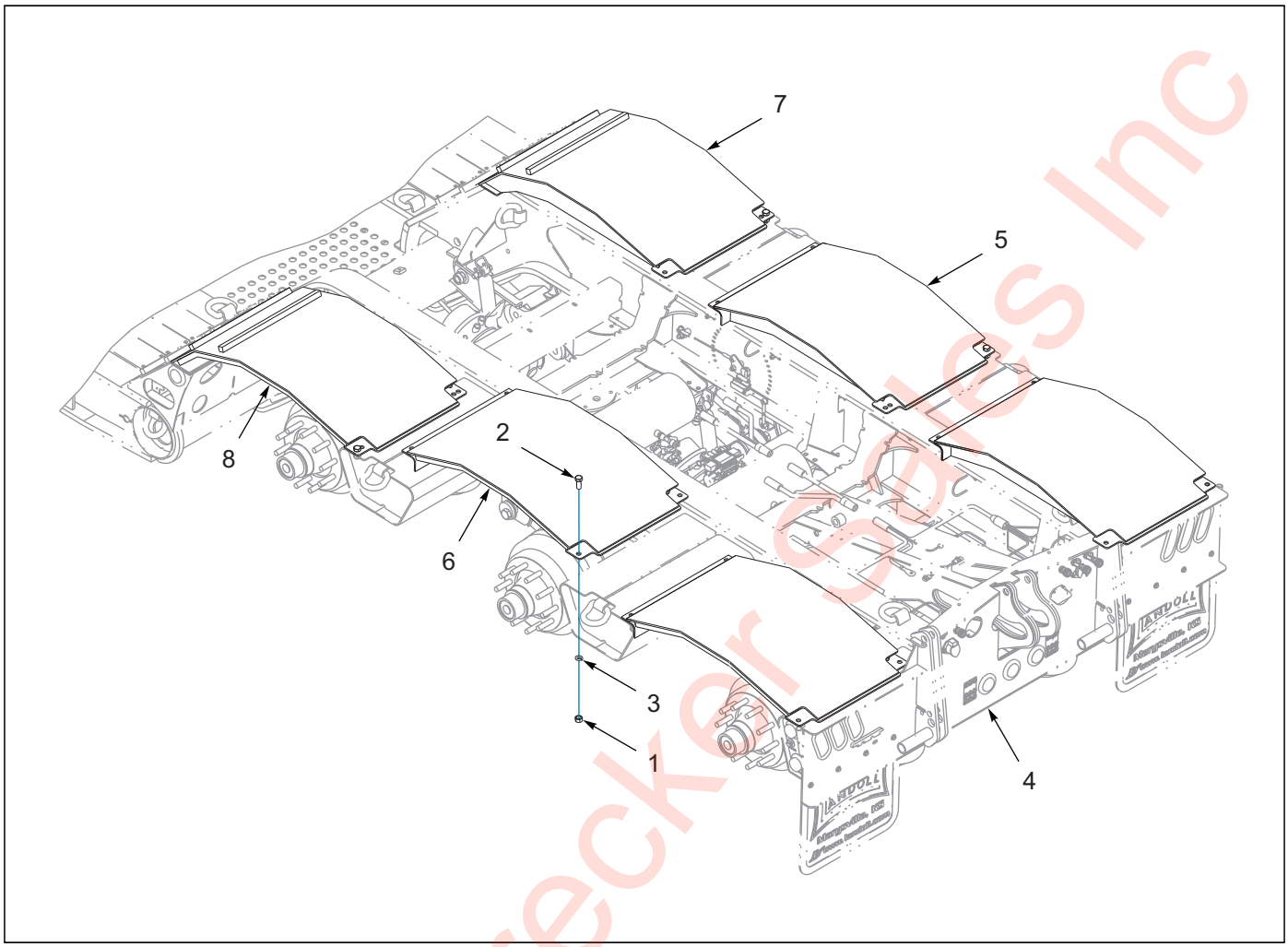

Figure 1-77: Wheel Cover Assembly - Used W/ 255 Tires

Wheel Cover Assembly - Used W/ 255 Tires

ITEM	PART NO.	DESCRIPTION	QTY.
	164838	WHEEL COVER ASSEMBLY	
1	1-512-010007-12	NUT, HEX 3/4-10 GRB	14
2	1-654-010061-04	SCREW, HEX HEAD CAP 3/4-10 X 1-3/4 GR5	14
3	1-861-010034-17	WASHER, SPLIT LOCK 3/4	14
4	-----	FRAME ASSEMBLY	REF
5	164828	WHEEL COVER WELDMENT RH	2
6	164829	WHEEL COVER WELDMENT LH	2
7	164830	WHEEL COVER FRONT RH	1
8	164831	WHEEL COVER FRONT LH	1

Eastern Wrecker Sales Inc

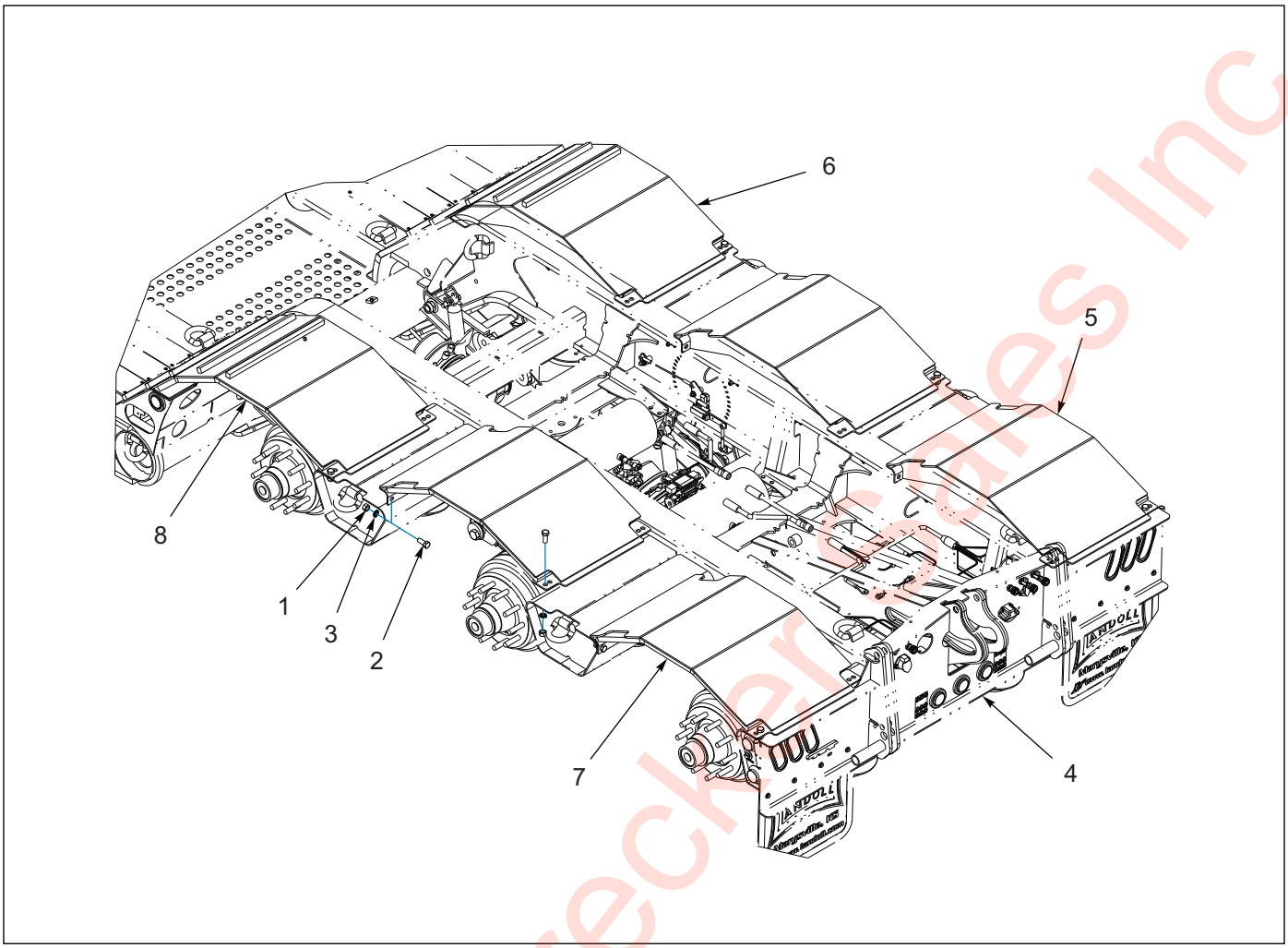

Figure 1-78: Wheel Cover Assembly - Used W/ 275 Tires

Wheel Cover Assembly - Used W/ 275 Tires

ITEM	PART NO.	DESCRIPTION	QTY.
	165151	WHEEL COVER ASSEMBLY	
1	1-512-010007-12	NUT, HEX 3/4-10 GRB	14
2	1-654-010061-04	SCREW, HEX HEAD CAP 3/4-10 X 1-3/4 GR5	14
3	1-861-010034-17	WASHER, SPLIT LOCK 3/4	14
4	-----	FRAME ASSEMBLY	REF
5	165152	WHEEL COVER WELDMENT RH	2
6	165156	WHEEL COVER FRONT RH	1
7	165160	WHEEL COVER WELDMENT LH	2
8	165161	WHEEL COVER FRONT LH	1

Eastern Wrecker Sales Inc

Table provided for general use.

NOTES:

Eastern Wrecker Sales Inc

Engine Assemblies - Option

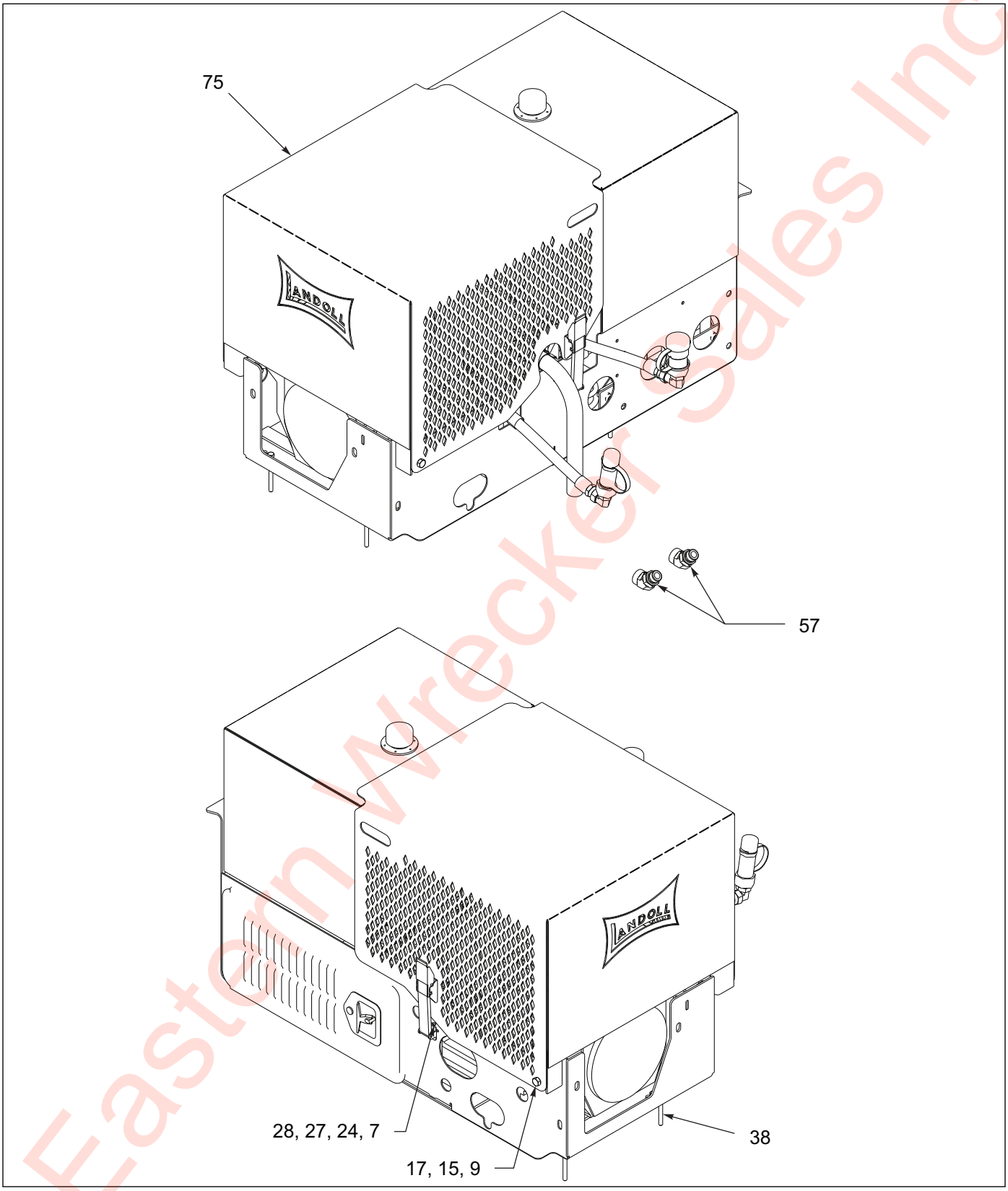

Figure 1-79: 25 HP Upper Deck Engine Package (1 of 4)

Eastern Wrecker Sales Inc

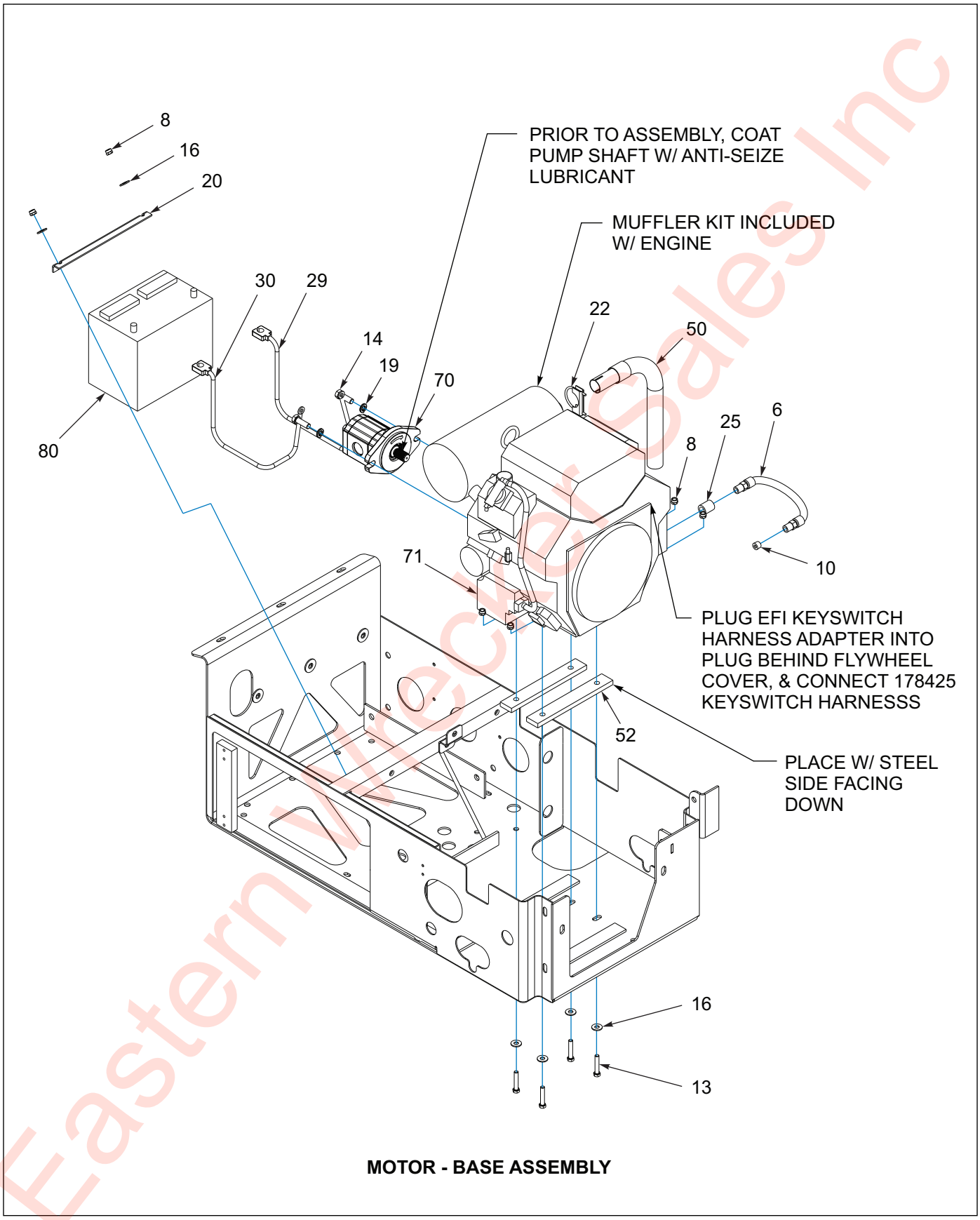

Figure 1-80: 25 HP Upper Deck Engine Package (2 of 4)

Eastern Wrecker Sales Inc

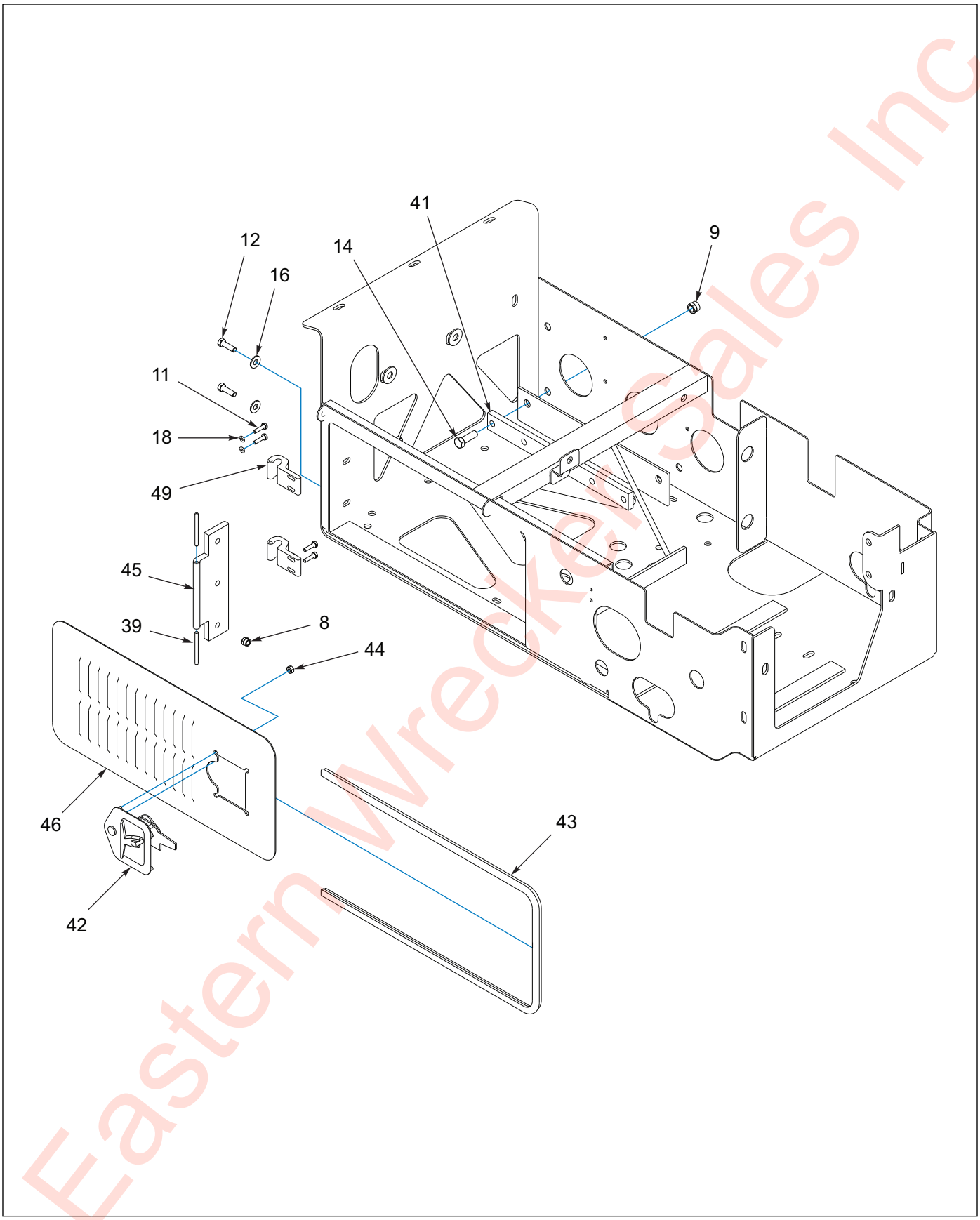

Figure 1-81: 25 HP Upper Deck Engine Package (3 of 4)

Eastern Wrecker Sales Inc

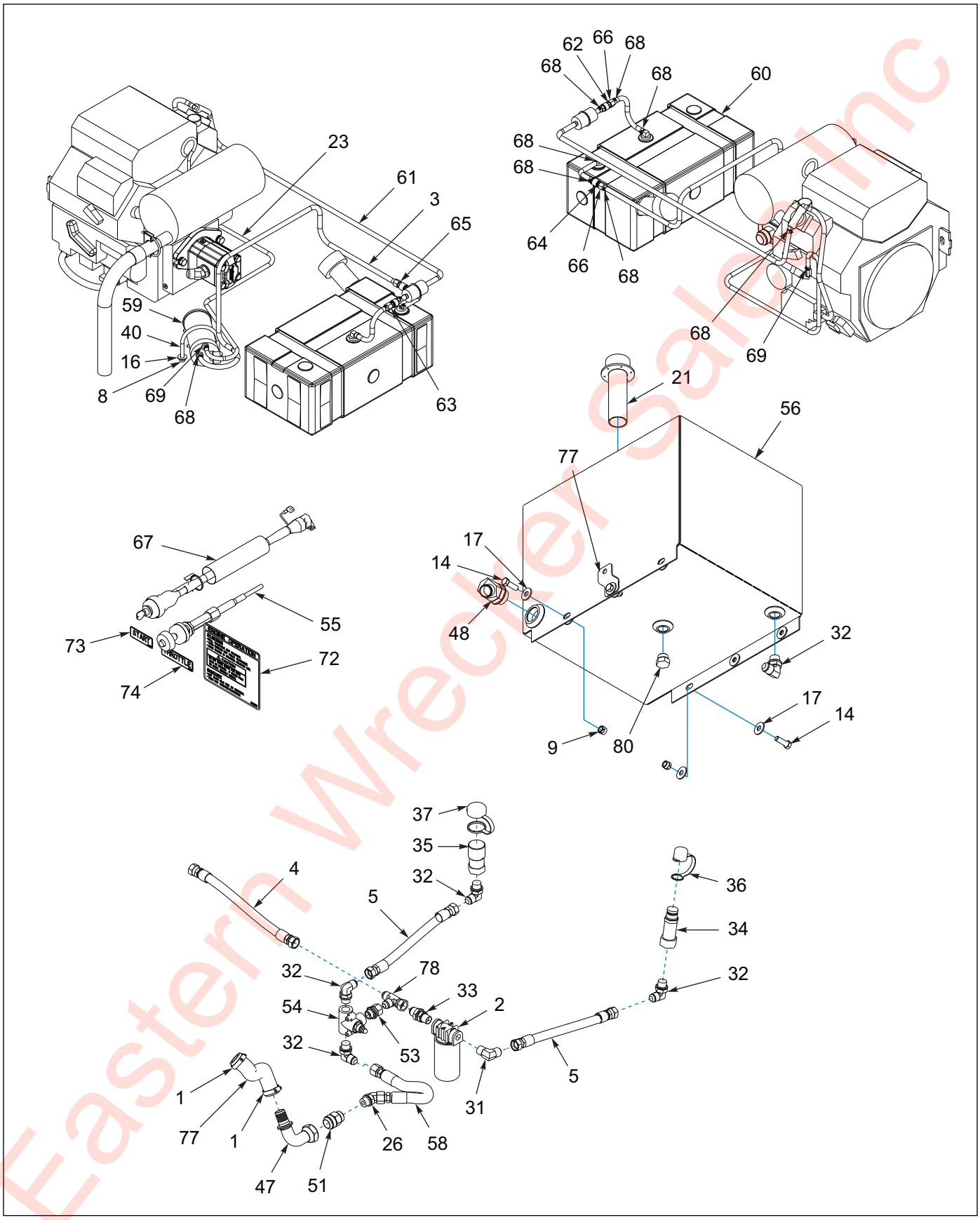

Figure 1-82: 25 HP Upper Deck Engine Package (4 of 4)

Eastern Wrecker Sales Inc

25 HP Upper Deck Engine Package

ITEM	PART NO.	DESCRIPTION	QTY.
	189360	ENGINE PACKAGE, 25HP EFI, U/D	
	189360FI	FIELD INSTL ENG PKG, 25 HP EFI, U/D	
1	1-181-010046-7	CLAMP,HOSE 1-1/16 TO 2DIA #24	2
2	1-295-010001	FILTER, RETURN LINE	1
3	1-316-010013	HOSE,1/4 LOW PRESSURE FUEL	1
4	1-397-010304018	HOSE ASSY, 3/4 X 18, SAE37, STR-STB	1
5	1-397-010304060	HOSE ASSY,3/4X60,SAE37,TR-ST	2
6	1-397-010312032	HOSE ASSY,3/8X32,3/8 MPT ENDS	1
7	1-512-010004-03	NUT,HEX,SLFLK 10-24UNC, GRA	8
8	1-512-010005-05	NUT, HEX, SLFLKG GRB 3/8-16	15
9	1-512-010005-09	NUT,HEX,SLFLKG, 1/2-13 GRB	10
10	1-560-010002-03	PLUG, PIPE, 3/8NPTF	1
11	1-654-010047-06	SCREW,HX CP 1/4-20UNCX1 GR5	4
12	1-654-010051-06	SCREW,HEX CAP 3/8-16UNCX1-1/4	3
13	1-654-010051-09	SCREW,HEX CAP,3/8-16UNCX2 GR5	6
14	1-654-010055-03	SCREW,HEX CAP,1/2-13UNCX1-1/2	10
15	1-654-010055-13	SCREW, HEX, 1/2-13 UNC X 4 GR5	2
16	1-861-010032-11	WASHER, FLAT 3/8 W ZP/CD	19
17	1-861-010032-15	WASHER, FLAT 1/2 W ZP/CD	14
18	1-861-010034-09	WASHER, LKG HLCL SPR, 1/4	4
19	1-861-010034-13	WASHER, LKG HLCL SPR, 1/2	2
20	3-120-010124	BATTERY CLAMP BRKT	1
21	3-162-010001	FILLER BREATHER STRAINER ASSY	1
22	3-182-010028	CLAMP MUFFLER	1
23	3-316-010008	3/16 ID FUEL HOSE	1
24	3-443-010018	LATCH,FLEX DRAW,LEVER ASSIST	2
25	3/8P COUPL	3/8 BLK PIPE COUPLING **(NOT SHOWN)**	1
26	40-0667-02	ADAPTER, 45 #8 O-RING-TUBE	1
27	110-0116	SCREW RD HD CAP 10-24X3/4	8
28	110-0253	WASHER,FLAT 3/16 STD	8
29	514-9045-26	CABLE ASSY BATTERY POSITIVE	1
30	514-9073-18	CABLE ASSY BATTERY NEG 18 LNG	1
31	2024-12-12S	ADAPTER 90 3/4MPT X3/4M JIC	1
32	2062-12-12S	ADAPTER,90,#12 O-RINGX#12TUBE	5
33	2240-12-12S	ADAPTER,BLKHD,3/4NPT-3/4TBE	1
34	105479	COUPLER FLAT FACE MALE NOSE	1
35	105480	COUPLER FLAT FACE FEMALE BODY	1
36	105481	COUPLER DUST CAP MALE	1
37	105482	COUPLER DUST CAP FEMALE	1
38	108295	SCREW,HX CP 3/8-16UNCX4 GR5	2
39	108601	PIN, DOOR HINGE	2
40	110578	U-BOLT, 3/8-16 x 3-1/8 x 4-1/8	1
41	113856	MOUNT,ENG ISOLATOR,KOHLERCH25	1
42	114814	LATCH FOLDING T LOCKABLE	1
43	114815	SEAL, SPONGE RUBBER TRIM	1
44	115877	NUT HVY HEX 1/4-20 GR5	4
45	116326	HINGE,BASE MNT, COM ENG PKG	1
46	116328	MOUNT,DOOR WLDMT,COM ENG PKG	1
47	116330	FITTING 1.25F 37-1.25 BARB 90	1

Eastern Wrecker Sales Inc

25 HP Upper Deck Engine Package

ITEM	PART NO.	DESCRIPTION	QTY.
48	117873	FITTING,1.63-12 SAE-1 25H/B45	1
49	119206	HINGE, DOOR ENG DRV, 25HP	2
50	119445	EXHAUST EXT WLDMT 25HP E/P	1
51	119553	CONNECTOR,O-RING/37FL,20-16	1
52	120659	ISOLATOR, KOHLER 25HP MOUNT	2
53	120660	ADAPTER #12-O/RFEM-12#FL M	1
54	120661	VALVE,HYD PRES,#12SAE,2500P	1
55	128774	CABLE, THROTTLE 40'	2
56	129264	HYD TANK WLDMT, 30G E/P	1
57	138209	ADAPTER, HYD 45 #12, MAOLE-FEM ORB	2
58	143850	HOSE, 3/4 X 35, SAE 37, #12STR-#12STR	1
59	166766	CARBON CANISTER,FUEL TANK,GAS	1
60	169531	TANK,FUEL PLSTC,6 GAL,LOW PERM	1
61	169532	HOSE, FUEL,1/4 LOW PERM, CARB	1
62	170109	FITTING,1/4MPT TO MALE QD,FORC	1
63	170110	FITTING, 5/16 BARB TO FEMALE QD, FORCE	1
64	170111	FITTING,1/4MPT TO MALE QD,SUZU	1
65	170112	FITTING, 5/16 BARB TO FEMALE QD, SUZUKI	1
66	173860	FITTING,1/4 HOSE BARBX1/4 FNPT	2
67	178428	SWITCH & HARNESS KIT KOLHER UD	1
68	178638	SPRING CLAMP, 1/2"OD FUEL HOSE	8
69	179090	SPRING CLAMP,7/16"OD FUEL HOSE	2
70	186811	PUMP HYDRAULIC GEAR 0.77CID	1
71	189308	ENGINE, KOHLER, 25HP, EFI, PUMP MNT	1
72	189309	DECAL, EFI ENG PKG INSTR	1
73	189310	DECAL, START, ENG PKG	1
74	189311	DECAL, THROTTLE, ENG PKG	1
75	189364	WELDMENT, HOOD ENG PKG, 25HP EFI	1
76	189369	PLATE, FUEL HOSE CLAMP	1
77	193904	HOSE, 1-1/4 X 7-1/2 SUCTION	1
78	203102-12-12S	ADAPTER,TEE, #12, SAE37 SWIVL	1
79	900598-12S	PLUG, O-RING BOSS #12	1
80	2481X	BATTERY 12 VOLT	1
81	199105	FUEL FILTER KOHLER, 25-050-42-S **(NOT SHOWN)**	1
82	210377	FUEL PUMP KOHLER **(NOT SHOWN)**	1

Eastern Mower Sales Inc

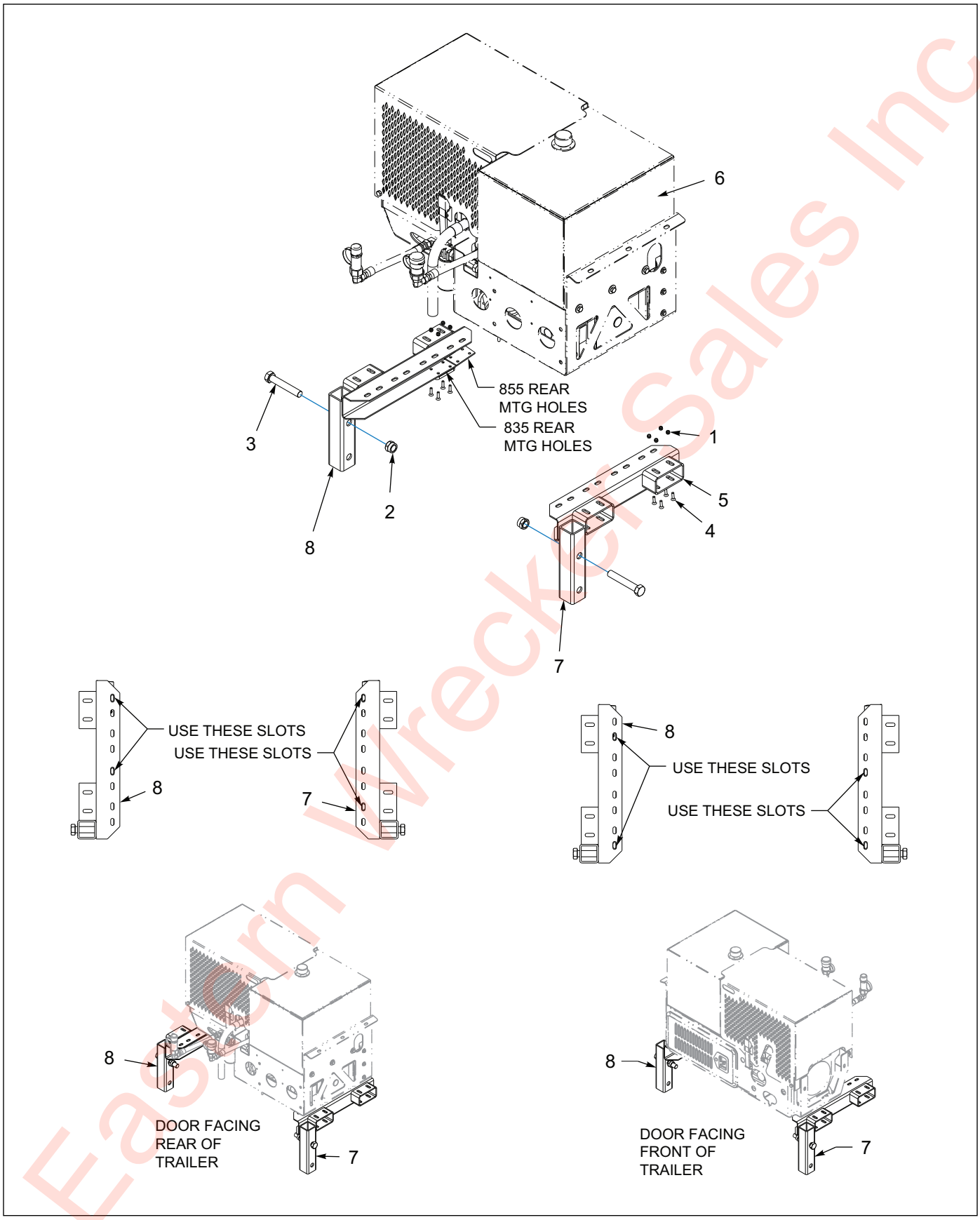

Eastern Wrecker Sales Inc

Figure 1-83: 800 Engine Mount Installation

800 Engine Mount Installation

ITEM	PART NO.	DESCRIPTION	QTY.
	178434	MOUNT INSTL ENG PKG 800	
1	1-512-010005-03	NUT HEX SLFLKG GRB 5/16-18	8
2	1-512-010005-19	NUT 1-8 HEX SLF-LOCKING GRB	2
3	1-654-010065-17	SCREW, HEX CAP, 1-8UNCX6, GR5	2
4	1-654-010121-06	SCREW HEX SKT CTSK,5/16X1-1/4	8
5	110996	PAD SWING REST BOTTOM	2
6	-----	27 HP ENGINE	REF
7	178435	MOUNT WLDMT LH ENG PKG	1
8	178436	MOUNT WLDMT RH ENG PKG	1

Eastern Wrecker Sales Inc

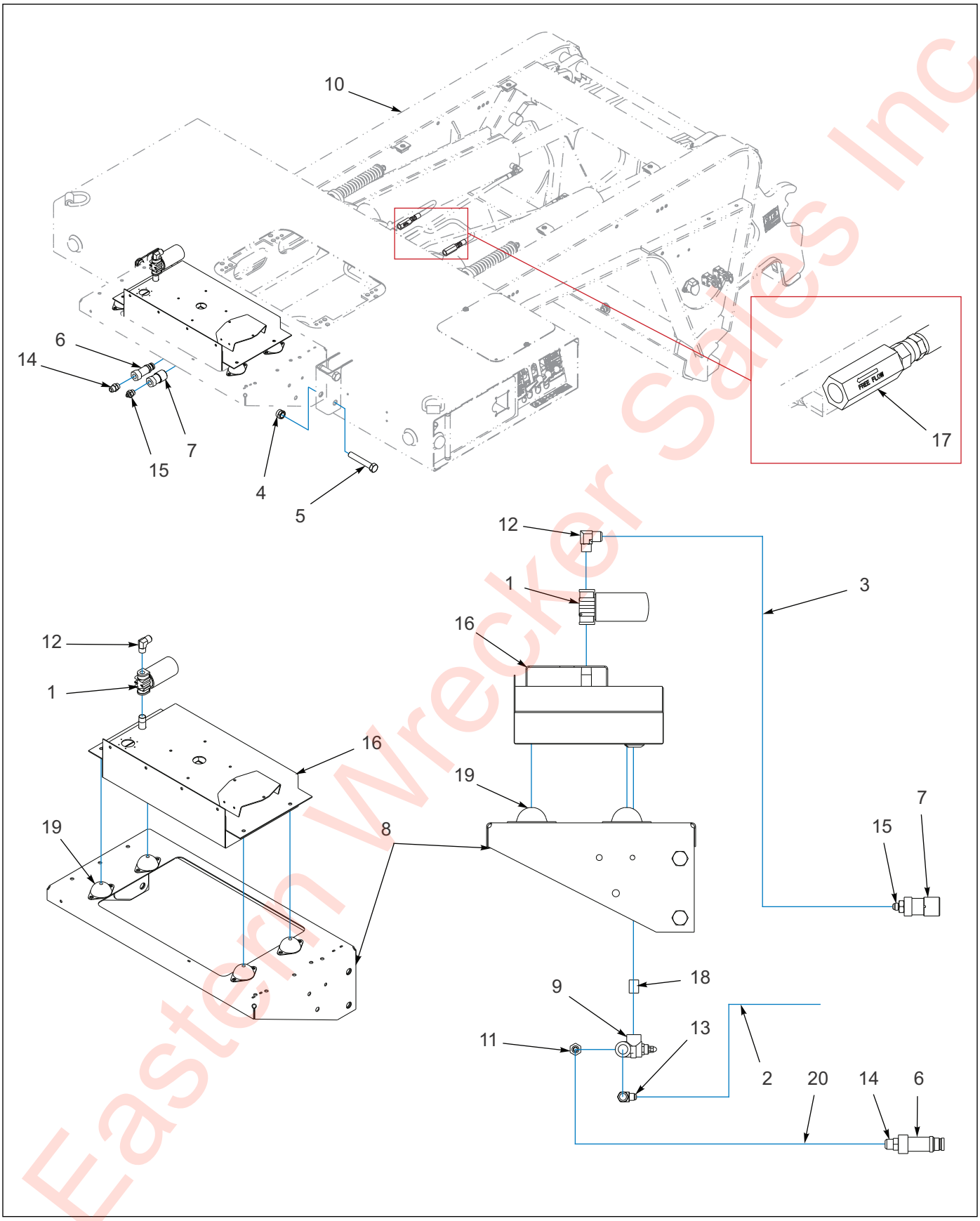

Figure 1-84: Front Engine Mount Installation

Eastern Wrecker Sales Inc

Front Engine Mount Installation

ITEM	PART NO.	DESCRIPTION	QTY.
	112172	ENGINE INSTALLATION FRONT MOUNT	
1	1-295-010001	RETURN LINE FILTER	REF
2	1-397-010301024	HOSE ASSEMBLY 1/2 X24	2
3	1-397-010305060	HOSE ASSEMBLY 3/4 X 60	1
4	1-512-010005-19	NUT, HEX LOCK 1-8 GRB	4
5	1-654-010065-17	SCREW, HEX HEAD CAP 1-8 X 6 GR5	4
6	105479	COUPLER FLAT FACE MALE NOSE	1
7	105480	COUPLER FLAT FACE FEMALE BODY	1
8	112184	MOUNT WELDMENT 11 HP FRONT ENGINE	1
9	125130	VALVE, HYDR PRESSURE RELIEF LW	1
10	-----	GOOSENECK ASSEMBLY	REF
11	2021-12-8S	ADAPTER STRAIGHT	1
12	2024-12-12S	ELBOW 90	REF
13	2024-12-8S	ELBOW 90	1
14	202702-12-12S	ADAPTER	1
15	202702-12-8S	ADAPTER	1
16	3-786-010033	TANK WELDMENT 5.5 GAL W/ ENG MOUNT	REF
17	3-846-010155	VALVE, RESTRICTOR **(NOT SHOWN)**	2
18	3/4NIPPLE	NIPPLE, ALL THREAD 3/4	1
19	CA-1595	MACHINE MOUNT 40 DUROMETER	REF
20	1-397-010302060	HOSE ASSEMBLY 1/2 X 60	1

Eastern Wrecker Sales Inc

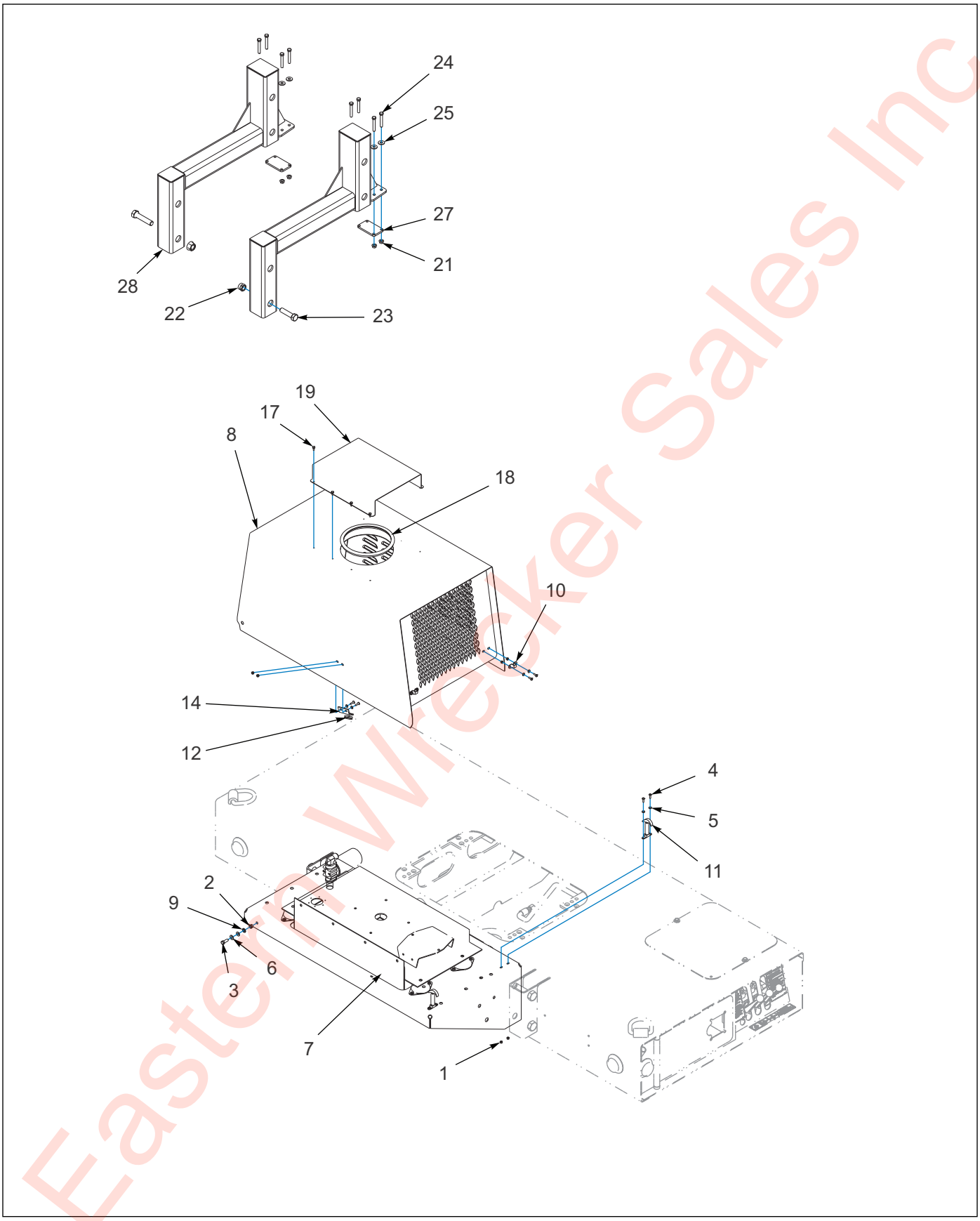

Figure 1-85: Front Engine Mount Cover Installation

Eastern Wrecker Sales Inc

Front Engine Mount Cover Installation

ITEM	PART NO.	DESCRIPTION	QTY.
	112174	COVER, INSTALLATION 11 HP FRONT MOUNT	
1	1-512-010004-03	NUT, HEX LOCK 10-24 GRA	10
2	1-512-010005-05	NUT, HEX LOCK 3/8-16 GRB	2
3	1-654-010051-05	SCREW, HEX HEAD CAP 3/8-16 X 1 GR5	2
4	1-656-010003051	SCREW, RD HEAD MACH #10-24 X 3/4	10
5	1-861-010032-03	WASHER, FLAT #10	10
6	1-861-010032-10	WASHER, FLAT 3/8N	2
7	112172	ENGINE INSTALLATION FRONT MOUNT **(SEE PAGE 1-154)**	REF
8	112175	COVER WELDMENT 11HP	1
9	112248	NYLON SHOULDER WASHER	4
10	231-4310	BRACKET, LATCHING	2
11	239-4899	LATCH, BATTERY COVER	2
12	1-343-010001	RUBBER GROMMET	1
13	10030	SEAL, BAR STOCK NEOPRENE SPNG **(NOT SHOWN)**	1
14	3-120-010463	BRACKET, HOOD STRAP	1
15	3-153-010024040	CABLE, VINYL COATED 1/8 X 40 **(NOT SHOWN)**	1
16	3-182-010034	CLAMP, 1/8 WIRE ROPE **(NOT SHOWN)**	4
17	118-7429	SCREW, SELF TAP HEX HEAD #10 X 1/2	8
18	114815	SEAL, SPONGE RUBBER TRIM	1
19	171441	SHIELD, ENGINE COVER TOP	1
20	1-397-010302042	HOSE ASSEMBLY, 1/2 X 42 **(NOT SHOWN)**	1
21	1-512-010005-03	NUT, HEX LOCK 5/16-18 GRB	8
22	1-512-010005-19	NUT, HEX LOCK 1-8 GRB	2
23	1-654-010065-17	SCREW, HEX HEAD CAP 1-8 X 6 GR5	2
24	1-654-010121-06	SCREW, HEX SOCKET CTSK 5/16-18 X 1-1/4	8
25	1-861-010032-09	WASHER, FLAT 5/16W	8
26	105276	HOSE ASSEMBLY, 3/4 X 52 **(NOT SHOWN)**	1
27	110996	PAD, SWING REST BOTTOM	2
28	118006	MOUNT WELDMENT ENG PKG 825 DECK	2
29	118005	MOUNT KIT, ENG PACKAGE 825 DECK **(ITEMS 20-28)**	1

Eastern Wholesale Sales Inc

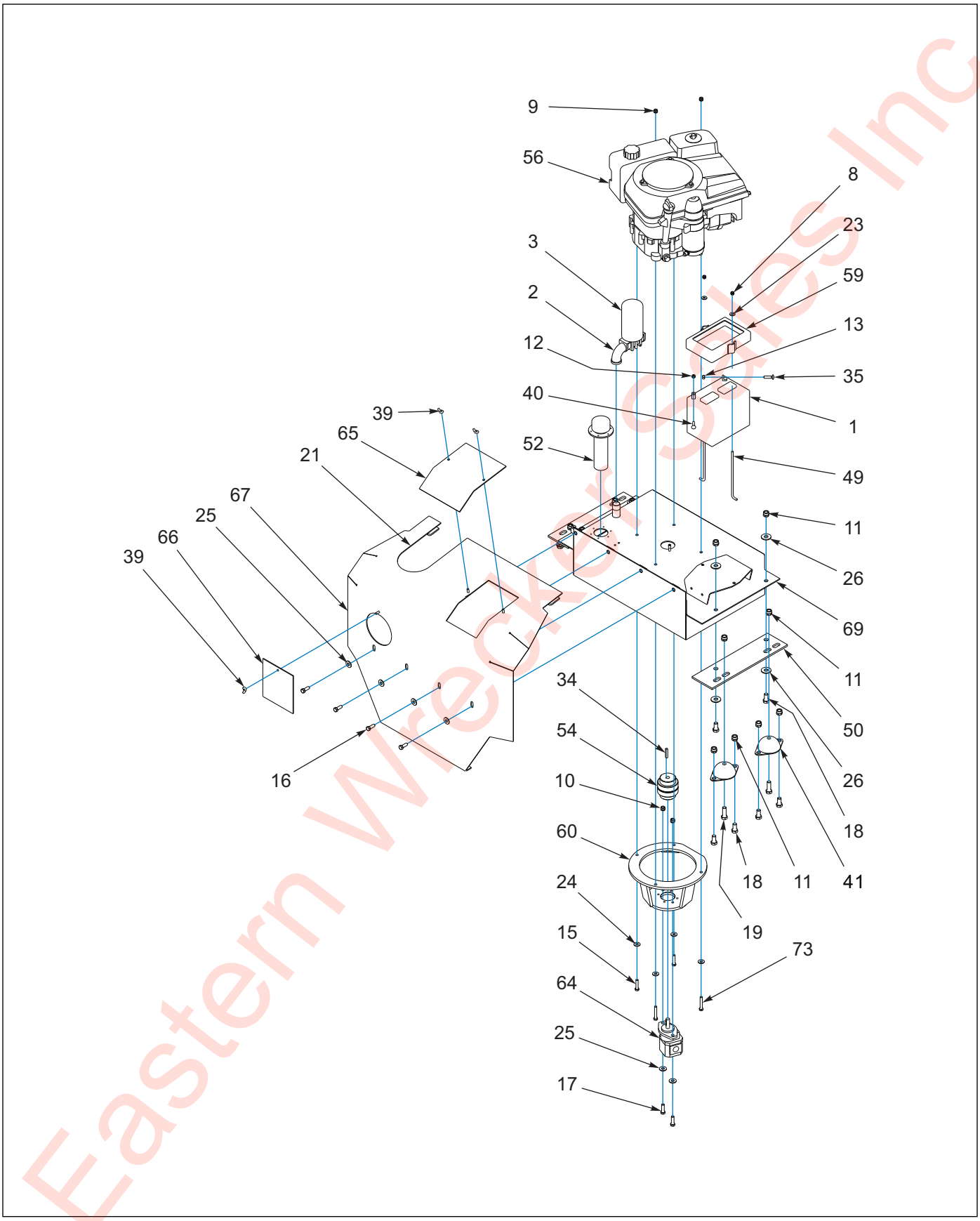

Figure 1-86: 42-11 HP Honda Engine Drive Installation (1 of 2)

Eastern Wrecker Sales Inc

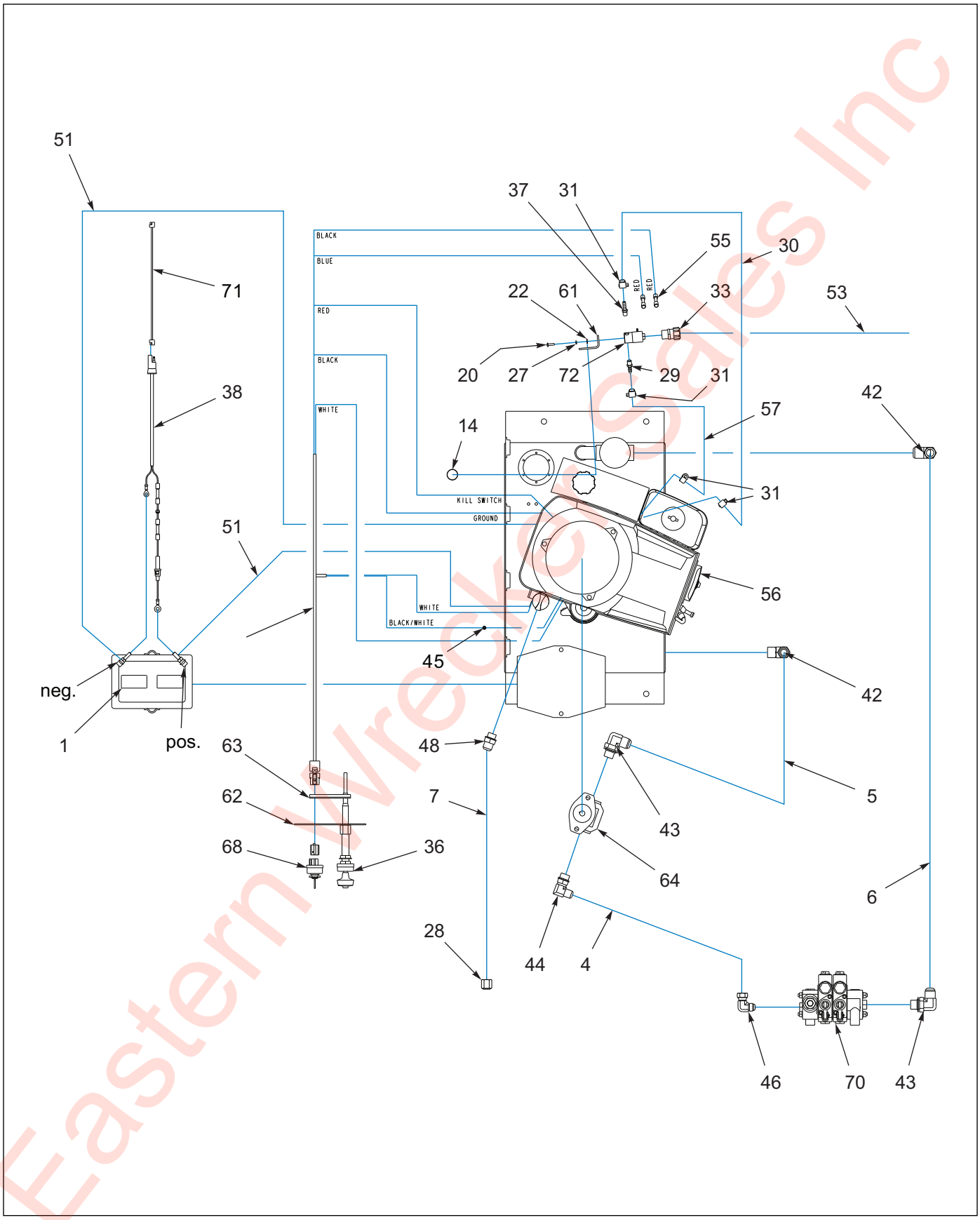

Figure 1-87: 42-11 HP Honda Engine Drive Installation (2 of 2)

Eastern Wrecker Sales Inc

42-11 HP Honda Engine Drive Installation

ITEM	PART NO.	DESCRIPTION	QTY.
	3-410-010912	42-11 HP HONDA ENGINE DRIVE INSTALLATION **(REF ONLY)**	
1	1-060-010004	BATTERY, 12 VOLT ALL-PURPOSE UTILITY	1
2	1-271-010005-05	ELBOW, STR 3/4	1
3	1-295-010001	RETURN LINE FILTER	1
4	1-397-010302060	HOSE ASSEMBLY 60”	1
5	1-397-010304016	HOSE ASSEMBLY 16”	1
6	1-397-010305060	HOSE ASSEMBLY 60”	1
7	1-397-010318018	HOSE ASSEMBLY 1/2	1
8	1-512-010005-01	NUT, HEX LOCK 1/4-20 GRB	2
9	1-512-010005-03	NUT, HEX LOCK 5/16-18	2
10	1-512-010005-05	NUT, HEX LOCK 3/8-16 GRB	8
11	1-512-010005-09	NUT, HEX LOCK 1/2-13 GRB	16
12	1-512-010007-05	NUT, HEX 1/4-20	1
13	1-512-010007-06	NUT, HEX 5/16-18	1
14	1-560-010002-05	PLUG, PIPE 3/4-14	1
15	1-654-010050-07	SCREW, HEX HEAD CAP 5/16 -24 X 1-1/2 GR5	2
16	1-654-010051-05	SCREW, HEX HEAD CAP 3/8-16 X 1 GR5	4
17	1-654-010051-06	SCREW, HEX HEAD CAP 3/8-16 X 1-1/4 GR5	4
18	1-654-010055-01	SCREW, HEX HEAD CAP 1/2-13 X 1 GR5	12
19	1-654-010055-03	SCREW, HEX HEAD CAP 1/2-13 X 1-1/2 GR5	4
20	1-654-010100015	SCREW, MACH SLOT TRUSS HEAD #8-32 X 5/8	2
21	1-822-010002	TRIM-LOK 3/16 X 23	1
22	1-861-010032-03	WASHER, FLAT #10	2
23	1-861-010032-07	WASHER, FLAT 1/4	2
24	1-861-010032-09	WASHER, FLAT 5/16	4
25	1-861-010032-11	WASHER, FLAT 3/8W	8
26	1-861-010032-15	WASHER, FLAT 1/2W	8
27	1-861-010034-07	WASHER SPLIT LOCK #10	2
28	102-0323	CAP NUT	1
29	102-0511	HOSE BARB	2
30	104-0505	HOSE FUEL LINE	2
31	105-0105	CLAMP, HOSE	4
33	106-0078	STRAIN RELIEF CONN 1/2	1
34	110-4337	KEY, STEEL	1
35	111-1267	SCREW, RD HEAD SQ NECK 5/16-18 X 1-1/4 GR5	1
36	139140	THROTTLE CABLE	1
37	144736	HOSE BARB	1
38	153032	HARNESS, TRICKLE CHARGE BATTERY	1
39	1/4-20WN	WING NUT, 1/4-20	3
40	1/4-20X1-1/4 CB	SCREW, RD HEAD SQ NECK 1/4-20 X 1-1/4	1
41	CA-1595	MACHINE MOUNT 40 DUROMETER	4
42	2024-12-12S	ADAPTER, 90	2
43	2062-10-12S	ADAPTER 90	1
44	2062-10-8S	ADAPTER 90	1
45	STP-164	CONNECTOR, FEMALE 1/4 SPADE INSULATED	1
46	2071-8-8S	ADAPTER 90	1
48	3-007-010042	ADAPTER	1
49	3-014-010023	ANCHOR BOLT BATTERY	2
50	3-054-010066	BAR, 4 HOLE MOUNT	2

Eastern Wrecker Sales Inc

42-11 HP Honda Engine Drive Installation

ITEM	PART NO.	DESCRIPTION	QTY.
51	3-156-010042	CABLE ASSEMBLY	2
52	3-162-010001	FILLER BREATHER STRAINER ASSEMBLY	1
53	3-201-010002	CONDUIT, FLEX PLASTIC 3/8	1
54	3-220-010010	COUPLING ASSEMBLY	1
55	3-272-010021	ELECT. BUTT SPLICE	2
56	3-273-010014	ENGINE, 11HP HONDA	1
57	3-316-010008	FUEL HOSE 3/16	1
58	3-368-010068	HARNESS, WIRING	1
59	3-380-010006	HOLD DOWN BATTERY	1
60	3-482-010051	PUMP MOUNT WELDMENT	1
61	3-482-010137	MOUNT FUEL SOLENOID	1
62	3-565-010172	PLATE MOUNTING ENGINE CONTROLS	1
63	3-565-010173	PLATE, CLAMP	1
64	3-591-010010	PUMP, HYDRAULIC	1
65	3-681-010056	COVER, ENG ACCESS	1
66	3-681-010057	COVER, HYD ACCESS	1
67	3-681-010069	SHIELD WELDMENT	1
68	3-765-010015	SWITCH ASSEMBLY, STARTER	1
69	3-786-010037	TANK WELDMENT	1
70	3-846-010041	VALVE, 2 SPOOL	REF
71	3-368-010252	HARNESS ASSEMBLY, BULKHEAD LIGHT	1
72	3-850-010002	FUEL SOLENOID 12V DC	1
73	5/16-18X2 HHCS	SCREW, HEX HEAD CAP 5/16-18 X 2 GR5	2

Eastern Wrecker Sales Inc

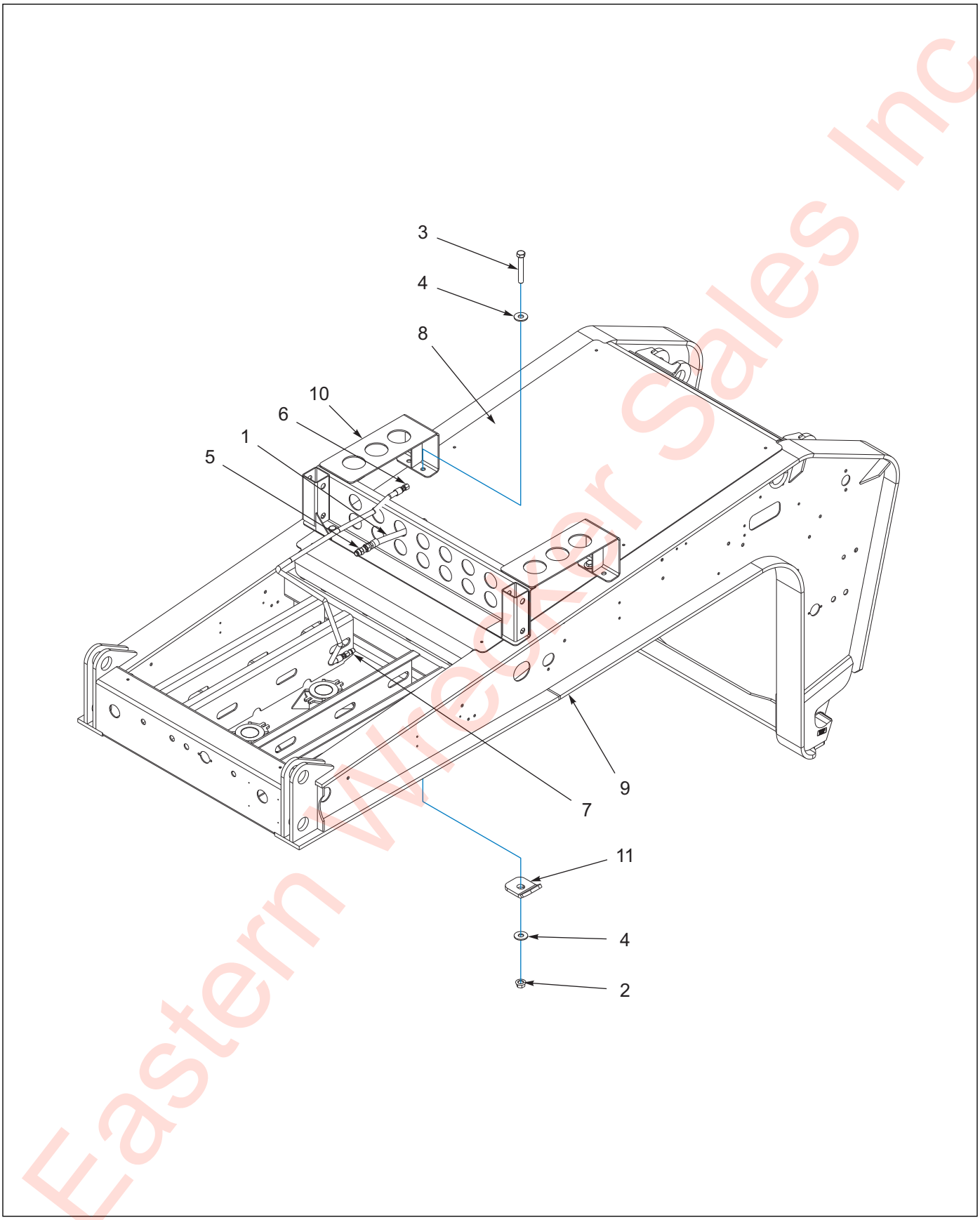

Figure 1-88: Engine Drive Support

Eastern Wrecker Sales Inc

Engine Drive Support

ITEM	PART NO.	DESCRIPTION	QTY.
	173608	ENGINE DRIVE SUPPORT	
1	1-397-010304060	HOSE ASSEMBLY 3/4 X 60	1
2	1-512-010005-15	NUT, HEX LOCK 3/4-10 GRB	4
3	1-654-010061-09	SCREW, HEX HEAD CAP 3/4-10 X 3 GR5	4
4	1-861-010032-21	WASHER, FLAT 3/4W	8
5	130157	FITTING, UNION 37 FLARE	1
6	1406044	HOSE ASSEMBLY 1/2 X 60	1
7	148338	FITTING, UNION 37 FLARE	1
8	162483	COVER, G/N TOP ALUM	REF
9	-----	GOOSENECK WLDMT	REF
10	173605	SUPPORT, ENG DRIVE WELDMENT	1
11	173607	CLAMP, ENG DRIVE	4

Eastern Wrecker Sales Inc

Fender Assemblies - Option

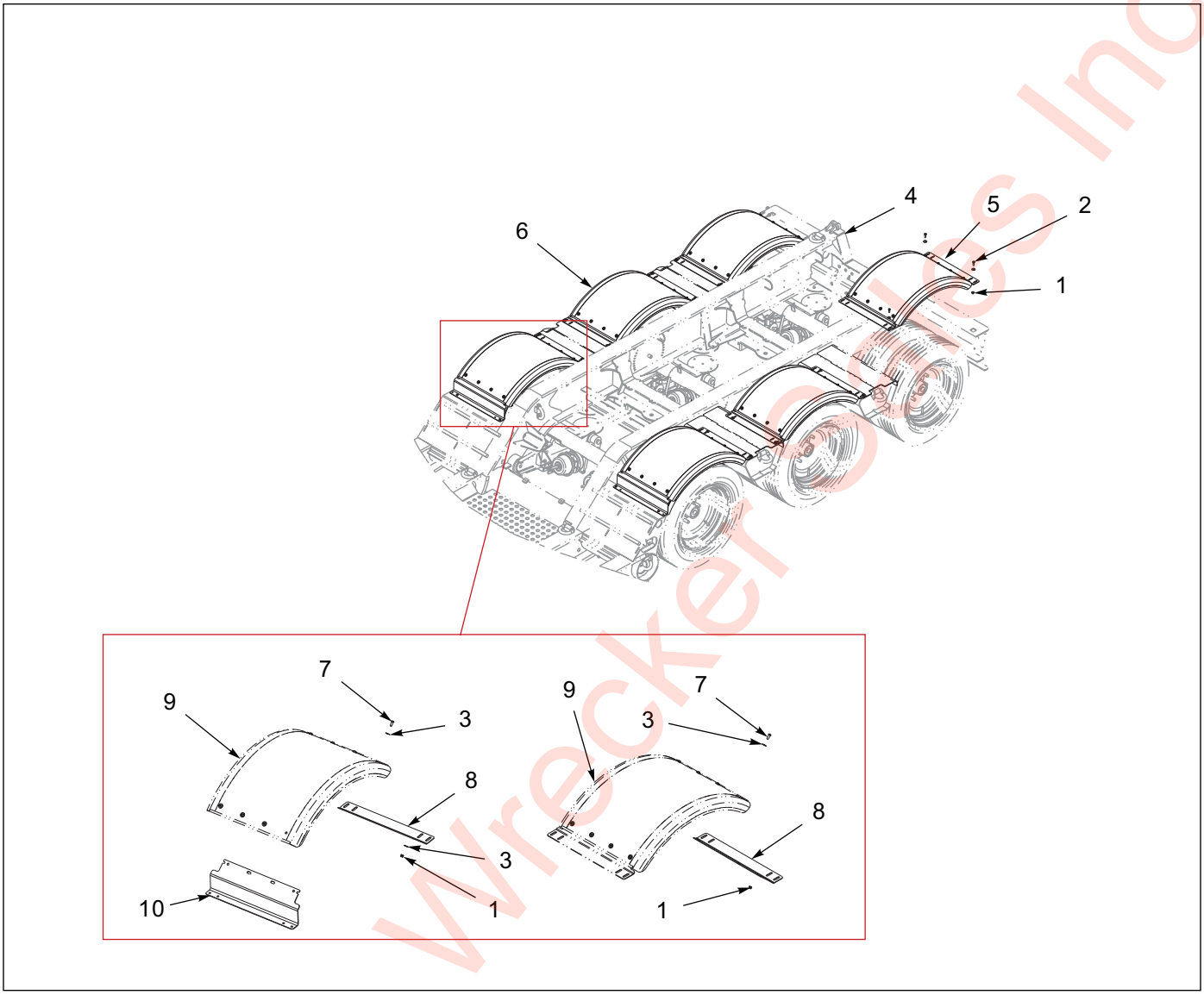

Figure 1-89: Black Poly Fender Installation - 3 Axle

Black Poly Fender Installation - 3 Axle

ITEM	PART NO.	DESCRIPTION	QTY.
	171976	BLACK POLY FENDER INSTALLATION, 3 AXLE	
1	1-512-010005-05	NUT, HEX LOCK 3/8-16 GRB	AR
2	1-654-010051-05	SCREW, HEX HEAD CAP 3/8-16 X 1 GR5	16
3	1-861-010032-11	WASHER, FLAT 3/8W	AR
4	-----	FRAME ASSEMBLY	REF
5	174020	FENDER SUB-ASSY, BLACK POLY **(ITEMS 1, 3, & 7-9)**	4
6	174021	FENDER SUB-ASSY, FRONT BLACK POLY **(ITEMS 1, 3, & 7-10)**	2
7	108336	SCREW, BUTTON HEAD CAP 3/8-16 X 1	AR
8	171984	BRACKET MOUNTING, FENDER	8
9	174019	FENDER, MODIFIED BLACK POLY DUAL	4
10	174022	BRACKET MOUNTING, FRONT FENDER	2

Eastern Wrecker Sales Inc

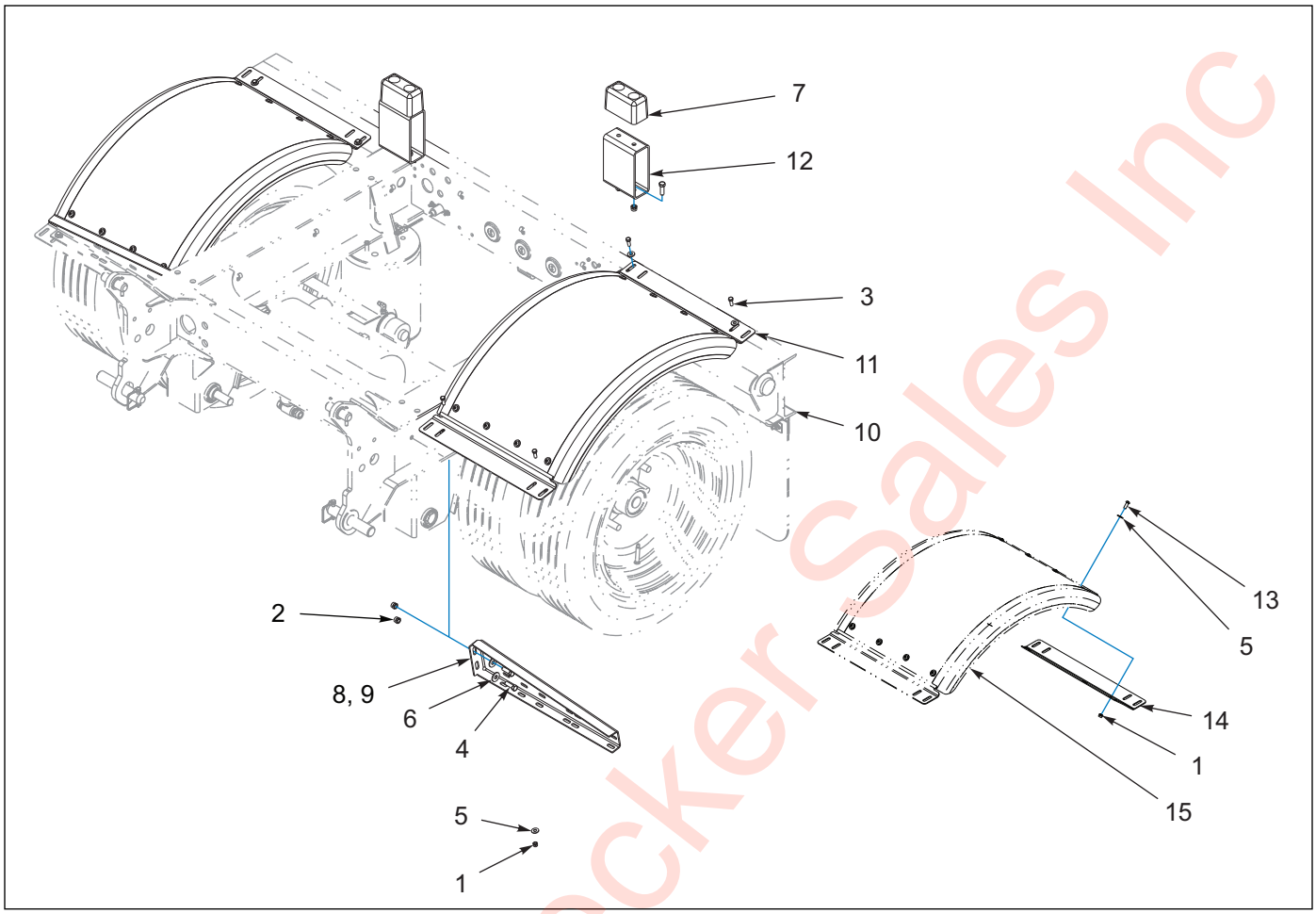

Figure 1-90: Black Poly Fender Installation - Flip Axle

Black Poly Fender Installation - Flip Axle

ITEM	PART NO.	DESCRIPTION	QTY.
	171977	BLACK POLY FENDER INSTALLATION, FLIP AXLE	
1	1-512-010005-05	NUT, HEX LOCK 3/8-16 GRB	AR
2	1-512-010005-09	NUT, HEX LOCK 1/2-13 GRB	8
3	1-654-010051-05	SCREW, HEX HEAD CAP 3/8-16 X 1 GR5	8
4	1-654-010055-03	SCREW, HEX HEAD CAP 1/2-13 X 1-1/2 GR5	8
5	1-861-010032-11	WASHER, FLAT 3/8W	AR
6	1-861-010032-15	WASHER, FLAT 1/2W	4
7	128874	BUMPER, RUBBER 6 X 3 X 3-1/2	REF
8	143670	MOUNT, FENDER/ MUD FLAP RH	1
9	143671	MOUNT, FENDER/ MUD FLAP LH	1
10	-----	FLIP ASSEMBLY	REF
11	174020	FENDER SUB-ASSEMBLY, BLACK POLY **(ITEMS 1, 3, & 13-16)**	2
12	174027	SUPPORT WELDMENT, FLIP AXLE	2
13	108336	SCREW, BUTTON HEAD CAP 3/8-16 X 1	AR
14	171984	BRACKET MOUNTING, FENDER	4
15	174019	FENDER, MODIFIED BLACK POLY DUAL	2
16	174022	BRACKET MOUNTING, FRONT FENDER	2

Eastern Wrecker Sales Inc

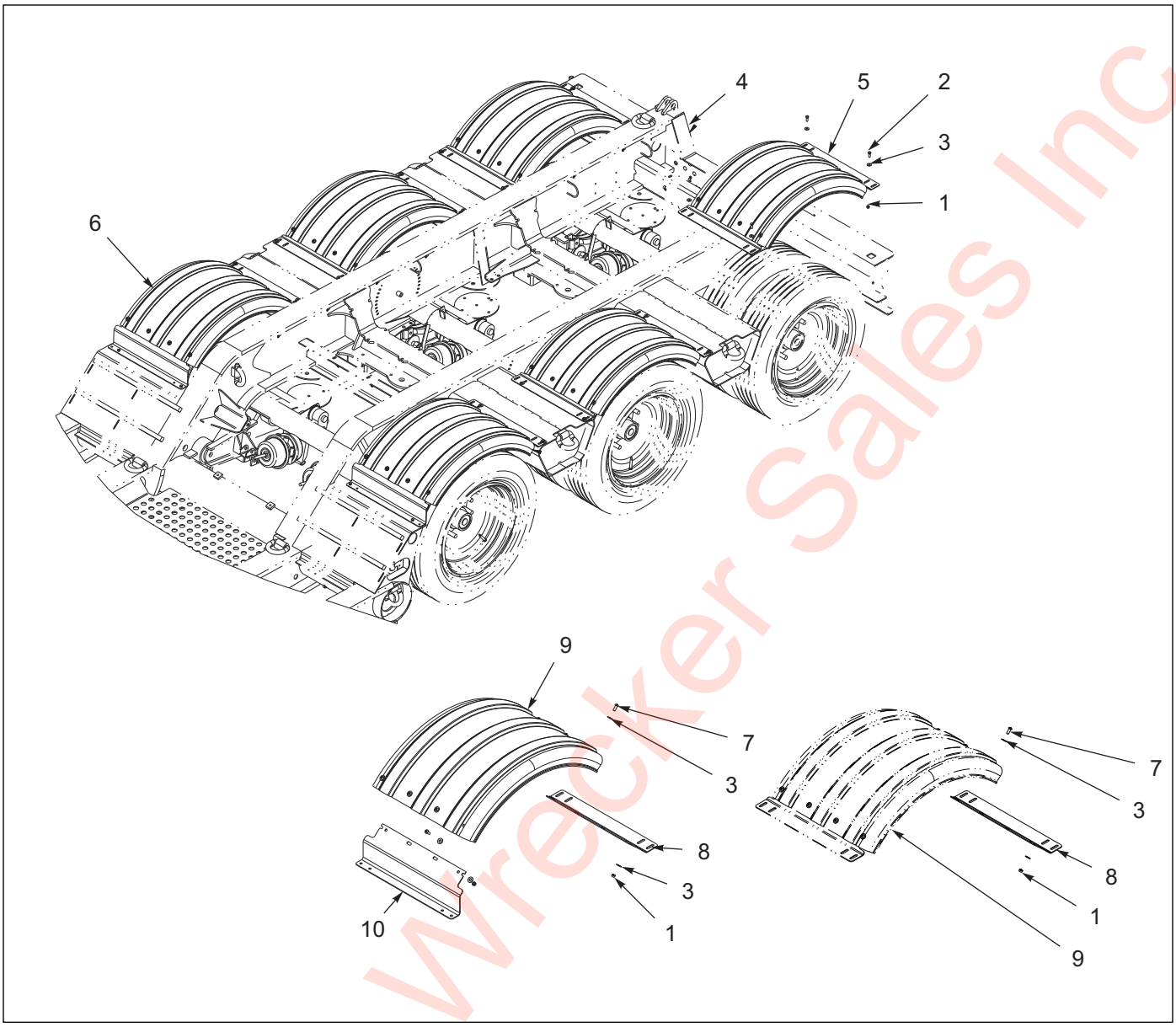

Figure 1-91: Chrome Poly Fender Installation - 3 Axle

Chrome Poly Fender Installation - 3 Axle

ITEM	PART NO.	DESCRIPTION	QTY.
	171981	BLACK POLY FENDER INSTALLATION, 3 AXLE	
1	1-512-010005-05	NUT, HEX LOCK 3/8-16 GRB	16
2	1-654-010051-05	SCREW, HEX HEAD CAP 3/8-16 X 1 GR5	16
3	1-861-010032-11	WASHER, FLAT 3/8W	20
4	-----	FRAME ASSEMBLY	REF
5	174023	FENDER SUB-ASSY, CHROME POLY **(ITEMS 1, 3, & 7-9)**	4
6	174024	FENDER SUB-ASSY, FRONT CHROME POLY **(ITEMS 1, 3, & 7-10)**	2
7	108336	SCREW, BUTTON HEAD CAP 3/8-16 X 1	8
8	171984	BRACKET MOUNTING, FENDER	2
9	171983	FENDER, MODIFIED CHROME POLY	1
10	174022	BRACKET MOUNTING, FRONT FENDER	1

Eastern Wrecker Sales Inc

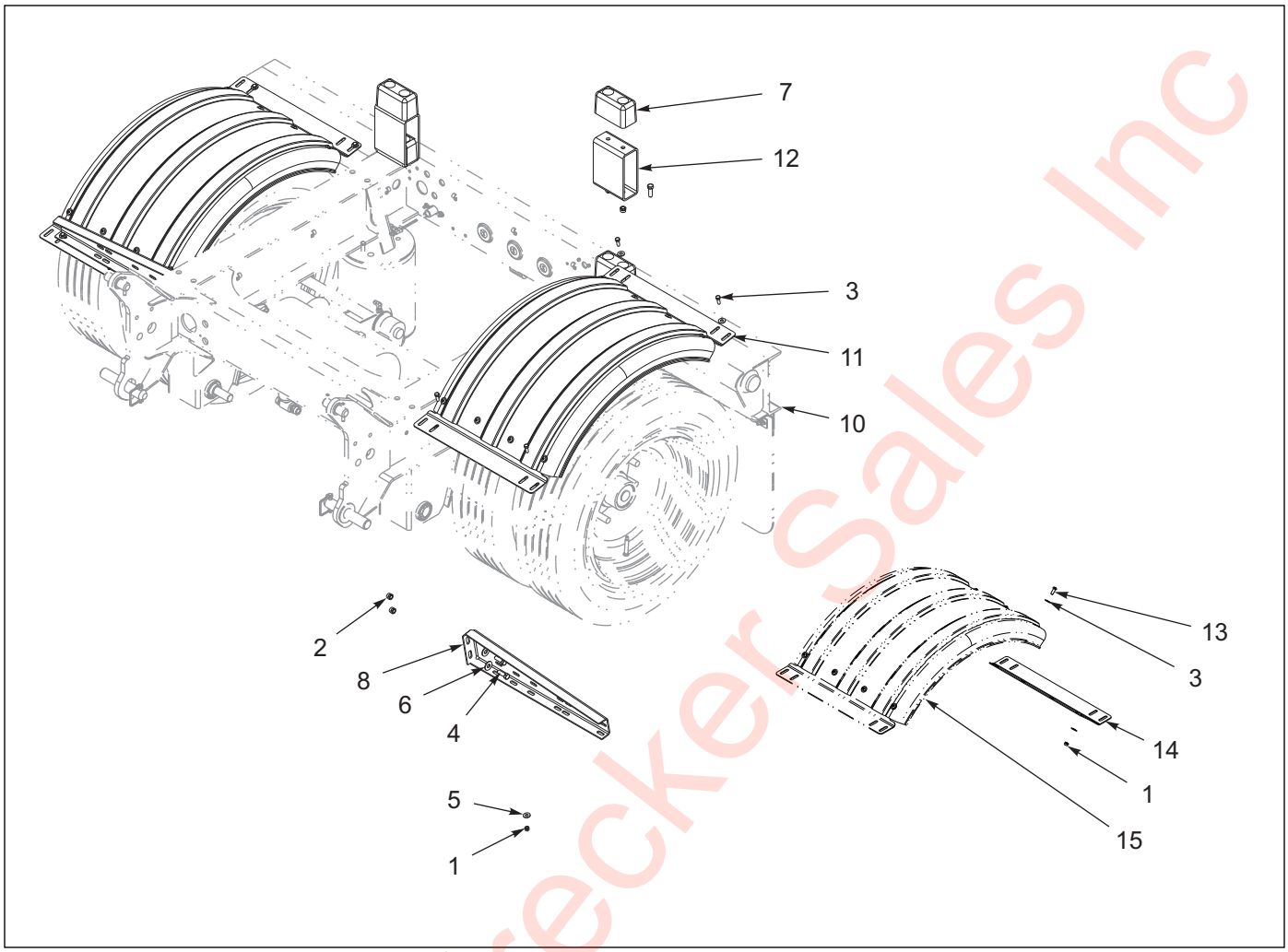

Figure 1-92: Chrome Poly Fender Installation - Flip Axle

Chrome Poly Fender Installation - Flip Axle

ITEM	PART NO.	DESCRIPTION	QTY.
	171982	CHROME POLY FENDER INSTALLATION, FLIP AXLE	
1	1-512-010005-05	NUT, HEX LOCK 3/8-16 GRB	8
2	1-512-010005-09	NUT, HEX LOCK 1/2-13 GRB	8
3	1-654-010051-05	SCREW, HEX HEAD CAP 3/8-16 X 1 GR5	8
4	1-654-010055-03	SCREW, HEX HEAD CAP 1/2-13 X 1-1/2 GR5	8
5	1-861-010032-11	WASHER, FLAT 3/8W	12
6	1-861-010032-15	WASHER, FLAT 1/2W	4
7	128874	BUMPER, RUBBER 6 X 3 X 3-1/2	REF
8	143670	MOUNT, FENDER/ MUD FLAP RH	1
9	143671	MOUNT, FENDER/ MUD FLAP LH	1
10	-----	FLIP ASSEMBLY	REF
11	174023	FENDER SUB-ASSEMBLY, CHROME POLY **(ITEMS 1, 5, & 13-15)**	2
12	174027	SUPPORT WELDMENT, FLIP AXLE	2
13	108336	SCREW, BUTTON HEAD CAP 3/8-16 X 1	8
14	171984	BRACKET MOUNTING, FENDER	2
15	171983	FENDER, MODIFIED CHROME POLY	1

Eastern Wrecker Sales Inc

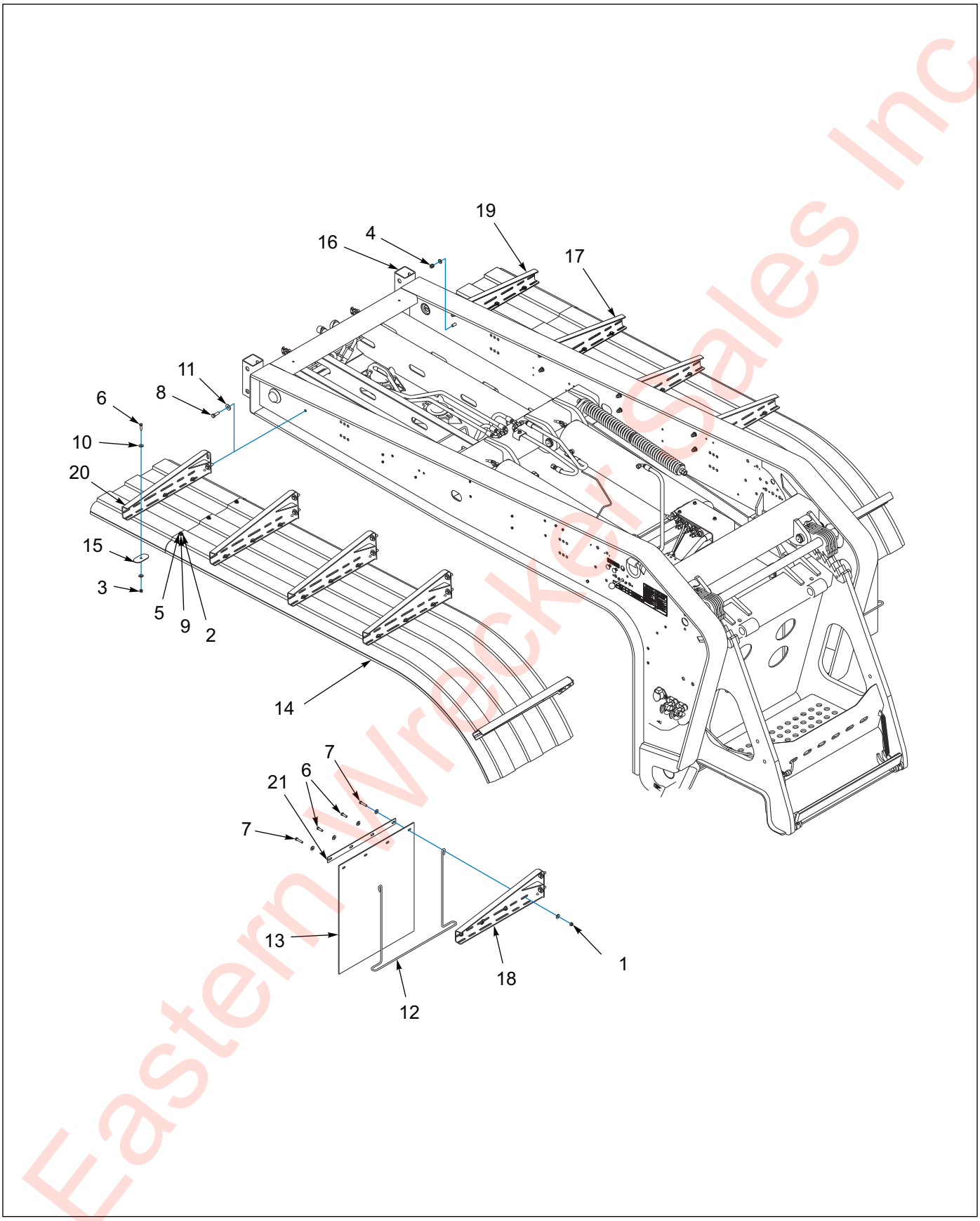

Figure 1-93: Gooseneck Fender Installation

Eastern Wrecker Sales Inc

Gooseneck Fender Installation

ITEM	PART NO.	DESCRIPTION	QTY.
	164827	FENDERS ASSY G/N 855-12'5"	
1	1-510-010001	NUT, 3/8-16 UNC FLANGE LOCK	8
2	1-512-010005-01	NUT,HEX,SLFLKG GRB 1/4-20	6
3	1-512-010005-05	NUT, HEX, SLFLKG GRB 3/8-16	30
4	1-512-010005-09	NUT,HEX,SLFLKG, 1/2-13 GRB	24
5	1-654-010047-04	SCREW,HEX CAP,1/4-20X3/4 GR5	6
6	1-654-010051-06	SCREW,HEX CAP 3/8-16UNCX1-1/4	34
7	1-654-010051-08	SCREW,HEX CAP,3/8-16X1-3/4 G	4
8	1-654-010055-03	SCREW,HEX CAP,1/2-13UNCX1-1/2	24
9	1-861-010032-07	WASHER,FLAT 1/4 ZP	12
10	1-861-010032-11	WASHER, FLAT 3/8 W ZP/CD	100
11	1-861-010032-15	WASHER, FLAT 1/2 W ZP/CD	24
12	128886	BRACKET ANTI-SAIL MUD FLAP	2
13	131195	MUD FLAP BLACK POLYMER 24X30	2
14	143669	FENDER PLASTIC 26-3/8X129	1
15	147312	WASHER BACK-UP FENDER MT	30
16	-----	GOOSENECK ASSY 855-12'-5"	REF
17	194148	WLDMT MNT FNDR/MUD FLAP RH 835	5
18	194149	WLDMT MNT FNDR/MUD FLAP LH 835	5
19	194152	WLDMT MNT FNDR/MUD FLAP RH 327	1
20	194153	WLDMT MNT FNDR/MUD FLAP LH 327	1
21	3-762-010017	CLAMP MUD FLAP	1

Eastern Wrecker Sales Inc

Lift Assemblies - Option

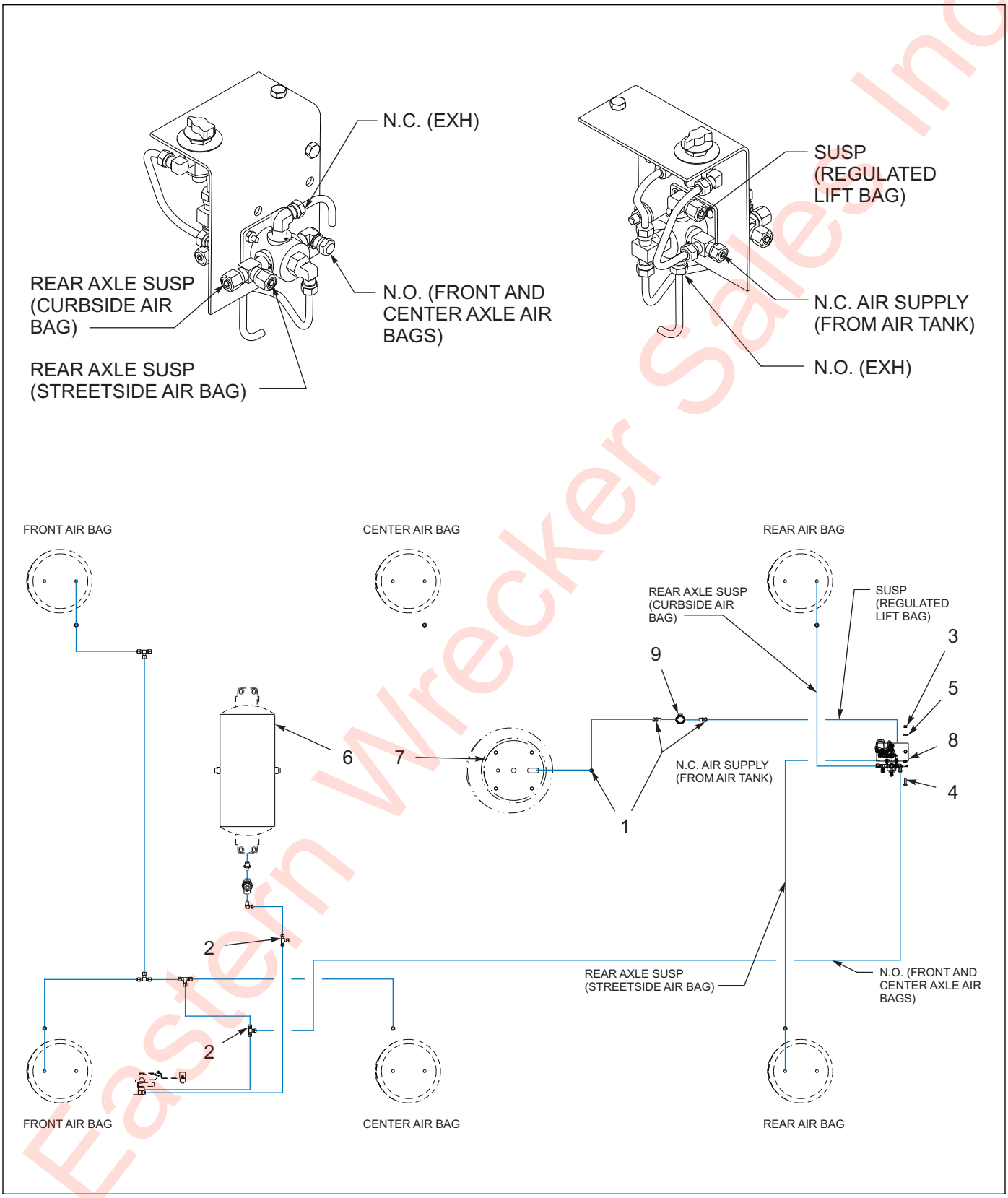

Figure 1-94: Lift Axle Control - 855E

Eastern Wrecker Sales Inc

Lift Axle Control Assembly - 855E

ITEM	PART NO.	DESCRIPTION	QTY.
	140939	AXLE LIFT CONTROL ASSEMBLY	
1	1-297-010007-05	FITTING, AIR	3
2	1-297-010010-01	FITTING, AIR TEE	2
3	1-512-010005-03	NUT, HEX LOCK 5/16-18 GRB	3
4	1-654-010049-05	SCREW, HEX HEAD CAP 5/16-18 X 1 GR5	3
5	1-861-010032-09	WASHER, FLAT 5/16W	3
6	112193	AIR RIDE PLUMBING INSTALLATION	REF
7	112953	AIR CONTROL KIT FOR LIFT AXLE	REF
8	140369	CONTROL ASSEMBLY, LIFT AXLE, FLIP **(SEE PAGE 1-172)**	1
9	164092	VALVE REGULATOR ASSEMBLY	1

Eastern Wrecker Sales Inc

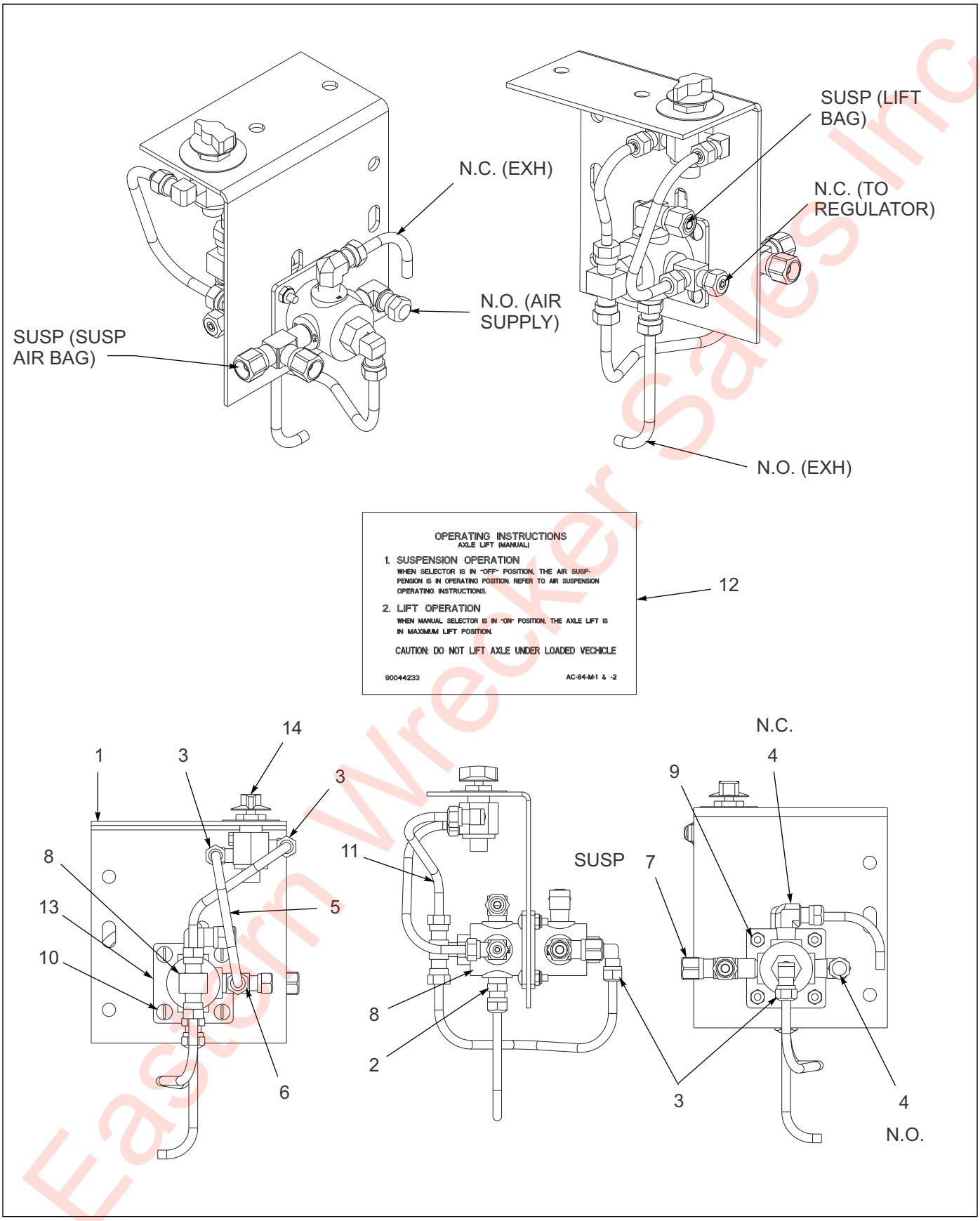

Figure 1-95: Lift Axle (Flip) Control Assembly

Eastern Wrecker Sales Inc

Lift Axle (Flip) Control Assembly

ITEM	PART NO.	DESCRIPTION	QTY.
	140369	CONTROL ASSEMBLY, LIFT AXLE - FLIP	
1	112324	PLATE, MOUNTING AIR LIFT KIT	1
2	1-297-010007-05	FITTING, AIR	1
3	1-297-010008-05	FITTING, AIR 90	3
4	1-297-010008-07	FITTING, AIR 90	2
5	1-297-010008-18	FITTING, AIR 90	1
6	1-297-010011-02	FITTING, AIR M/RUN TEE	1
7	1-297-010011-04	FITTING, AIR M/RUN TEE	1
8	1-297-010015-02	FITTING, AIR BR TEE	1
9	1-512-010003-06	NUT, HEX LOCK #10-24	4
10	1-656-010003051	SCREW, RD HEAD MACH #10-24 X 3/4	4
11	1-833-010001	TUBING, NYLON 1/4OD	AR
12	-----	DECAL, AXLE LIFT OPERATING INSTRUCTIONS	REF
13	900-54-079	PILOT VALVE	2
14	900-54-088	VALVE, AIR RIDE CONTROL	REF

Eastern Wrecker Sales Inc

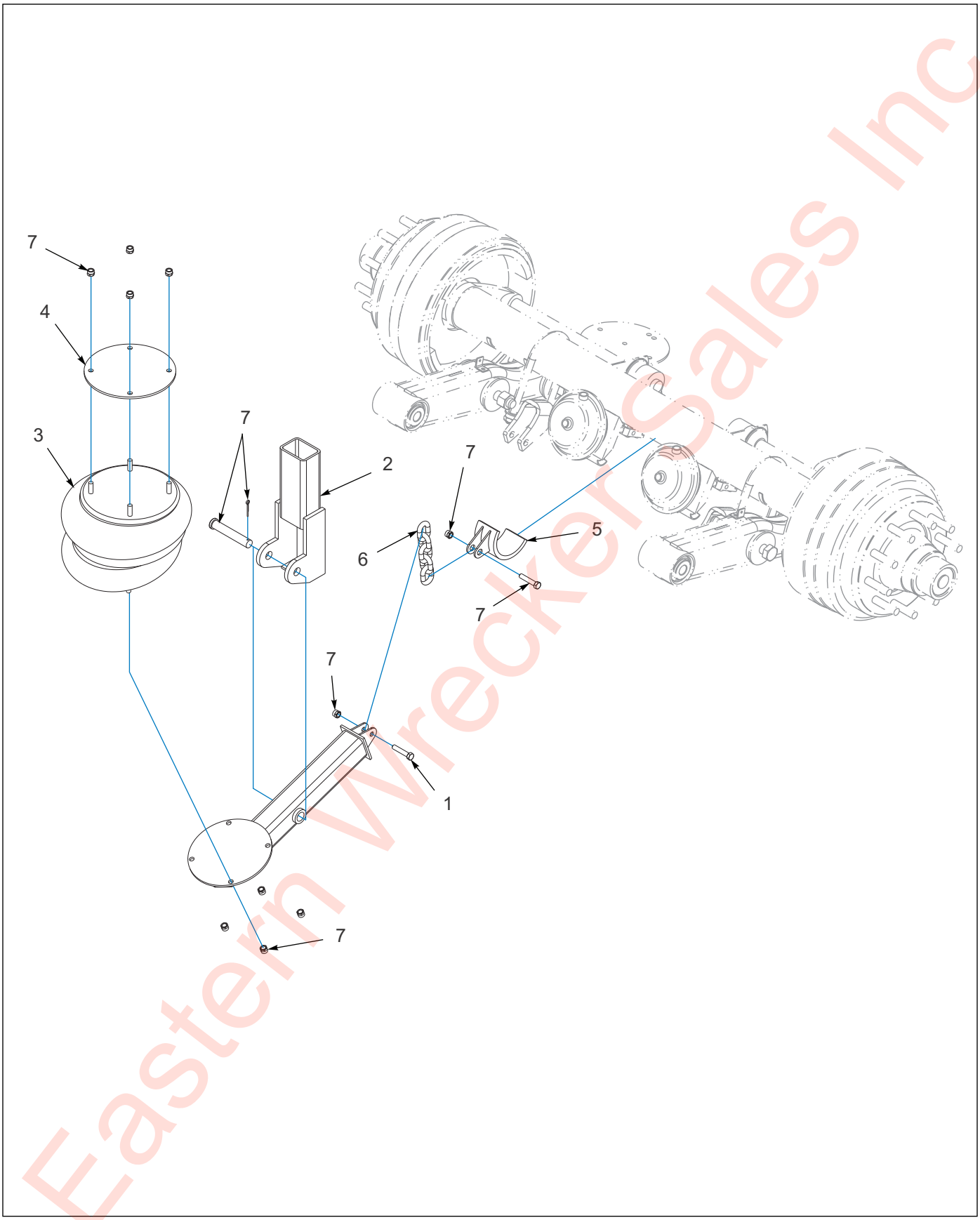

Eastern Wrecker Sales Inc

Figure 1-96: Rear Suspension Air Lift Assembly

Rear Suspension Air Lift Assembly

ITEM	PART NO.	DESCRIPTION	QTY.
	140450	REAR SUSPENSION AIR LIFT ASSEMBLY	
1	161825	BEAM LIFT BRACKET	1
2	161830	ANCHOR WELDMENT AXLE LIFT PIVOT	1
3	164087	AIR SPRING	1
4	164088	PLATE, AIR SPRING MOUNTING	1
5	161833	AXLE WELDMENT, AXLE LIFT	1
6	164090	CHAIN	1
7	164091	FASTENER KIT	1
8	164092	VALVE REGULATOR ASSEMBLY **(NOT SHOWN)**	1
9	164093	CENTER BAG LIFT - LITERATURE KIT **(NOT SHOWN)**	1

Eastern Wrecker Sales Inc

Light Installations - Options

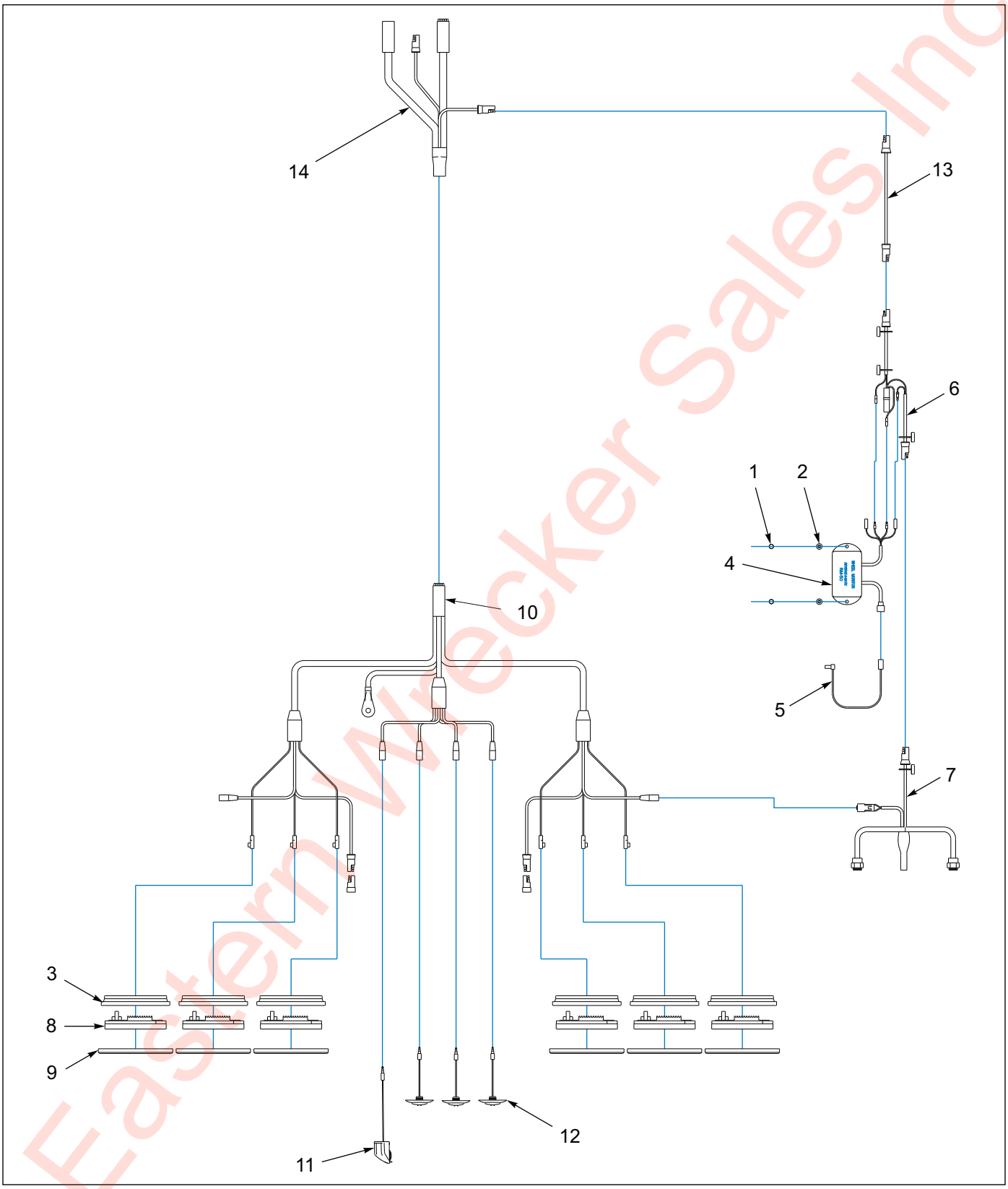

Figure 1-97: Backup Alarm/Light Installation

Eastern Wrecker Sales Inc

Backup Alarm/Light Installation

ITEM	PART NO.	DESCRIPTION	QTY.
	150329	BACKUP ALARM/LIGHT INSTALLATION	
1	1-654-010047-04	SCREW, HEX HEAD CAP 1/4-20 X 3/4 GR5	6
2	108417	NUT, HEX FLANGE SPIRALOCK 1/4-20	6
3	143114	GROMMET OVAL GROTE **(BEFORE 01/02/20)**	8
4	150072	REVERSE DETN MODULE AND SENSOR	1
5	137559	SENSOR DIRECTIONAL CABLE, BACK-UP	1
6	150074	HARNESS, MODULE/ALARM	1
7	166872	HARNESS, BACKUP LIGHT/ALARM	1
8	179902	LIGHT S/T/T RED CLEAR LENS GRT **(BEFORE 01/02/20)**	6
8	213295	LIGHT S/T/T RED CLEAR LENS GRT **(AFTER 01/02/20)**	6
9	180570	COVER CHROME OBLONG GROM **(BEFORE 01/02/20)**	6
9	213296	COVER CHROME OBLONG GROM **(AFTER 01/02/20)**	6
10	187859	HARNESS, BUMPER MICRONOVA GROTE	1
11	187860	LIGHT ASSY, LICENSE LED GROTE	1
12	187864	LIGHT, RED LED, .75CL/MK CLEAR CB	5
13	3-368-010252	HARNESS ASSY, BKHD LIGHT EXT	1
14	143103	HARNESS, E-CHAIN GROTE	1

Eastern Wrecker Sales Inc

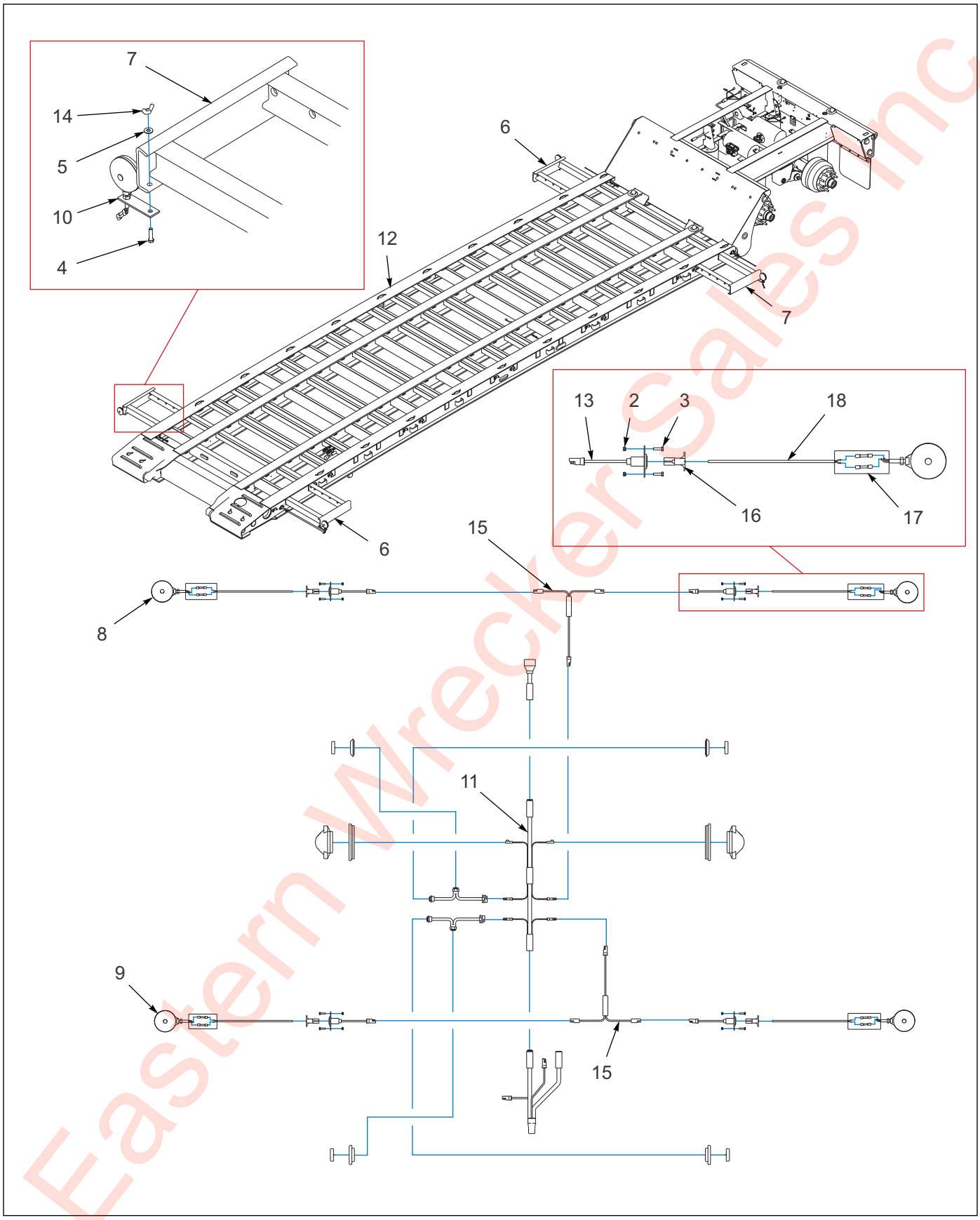

Figure 1-98: Pullout Extension Mounted Light Package

Eastern Wrecker Sales Inc

Pullout Extension Mounted Light Package

ITEM	PART NO.	DESCRIPTION	QTY.
	146931	PULLOUT EXTENSION MNTD LIGHT PACKAGE	
1	0013007	TUBING, HEAT SHRINK	AR
2	1-512-010005-01	NUT, HEX LOCK 1/4-20 GRB	8
3	1-654-010047-06	SCREW, HEX HEAD CAP 1/4-20 X 1 GR5	8
4	1-654-010051-07	SCREW, HEX HEAD CAP 3/8-16 X 1-1/2 GR5	4
5	1-861-010032-11	WASHER, FLAT 3/8W	8
6	112598	PULL-OU0T ASSEMBLY, RH	REF
7	112599	PULL-OUT ASSEMBLY, LH	REF
8	129893	LAMP, YELLOW TURN SIGNAL STUD MOUNT	2
9	129894	LAMP, RED TURN SIGNAL STUD MOUNT	2
10	129895	BRACKET, LAMP MOUNTING PULLOUT EXT	4
11	143102	HARNESS, MAIN	2
12	-----	FRAME WELDMENT	REF
13	150116	PIGTAIL MAKER	4
14	155628	NUT, WING 3/8-16	4
15	167965	HARNESS, JUMPER T-POWER	2
16	3-272-010010	CONNECTOR ELECT 4 POLE MALE	4
17	3-272-010021	ELECT BUTT SPLICE 16/14 W/ SEAL	8
18	W214S-1	CABLE, 2 WIRE 14AWG PVC JACKET	AR

Eastern Wrecker Sales Inc

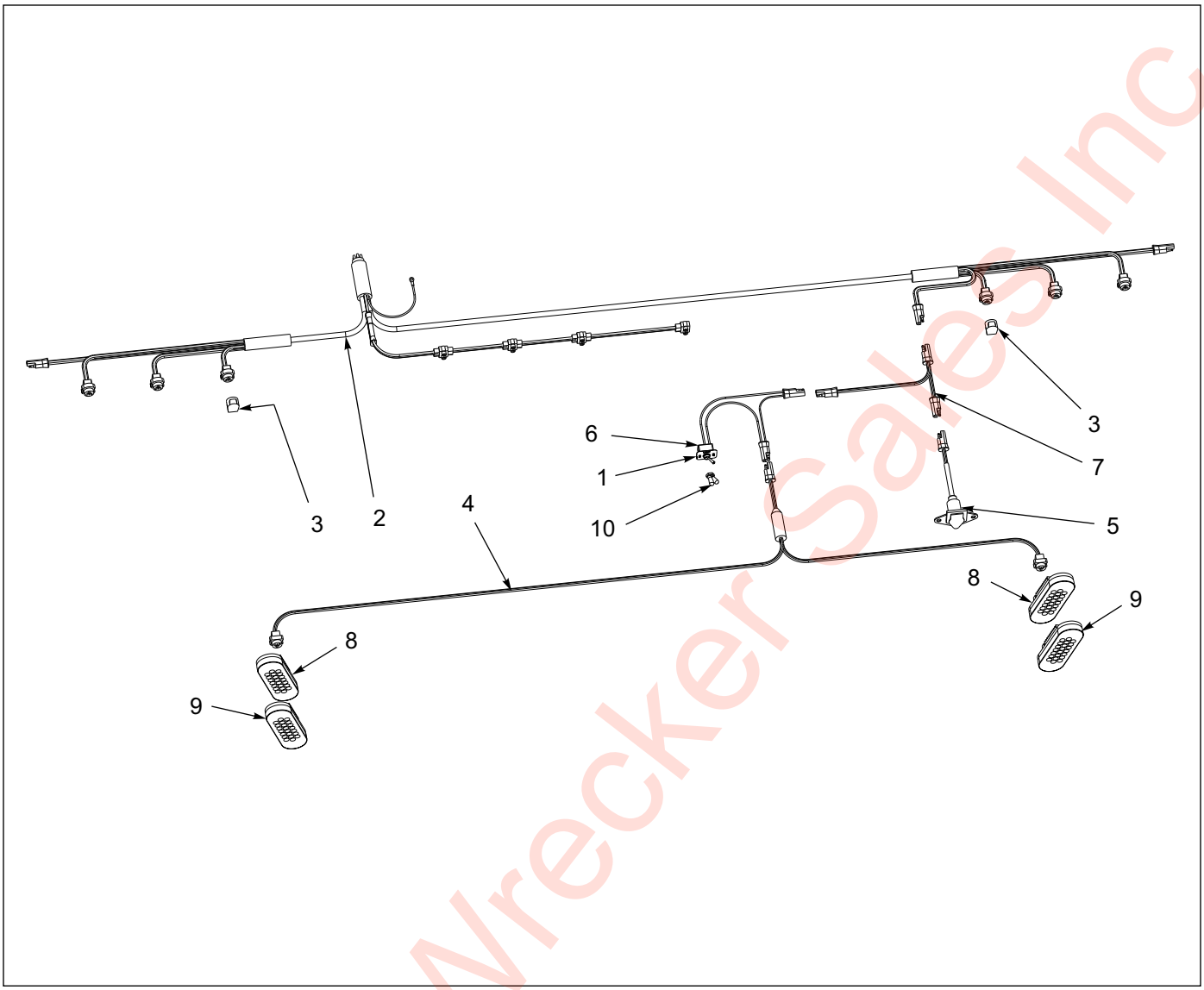

Figure 1-99: Strobe Light - 800E Bumper

Strobe Light - 800E Bumper

ITEM	PART NO.	DESCRIPTION	QTY.
	199131	STROBE 800E BUMPER GROTE	
1	130116	DECAL, ON/OFF LIGHT	1
2	143104	HARNESS BUMPER GROTE	REF
3	144608	DUMMY PLUG FOR FEMALE PLUG	2
4	150114	HARNESS BUMPER STROBE GROTE	1
5	150116	HARNESS ASSY RCPT 800	REF
6	150117	SWITCH ASSY LIGHT GROTE	1
7	150118	HARNESS JUMPER BRANCH	1
8	177902	KNOB,SLT30AC STEERING WHEEL	2
9	187869	LIGHT STROBE YEL CLEAR LENS GR	2
10	81264	RUBBER BOOT FOR ELECT SWITCH	1
11	199131FI	FIELD INSTALLATION KIT - 800E BUMPER STROBE LIGHT	REF

Eastern Wrecker Sales Inc

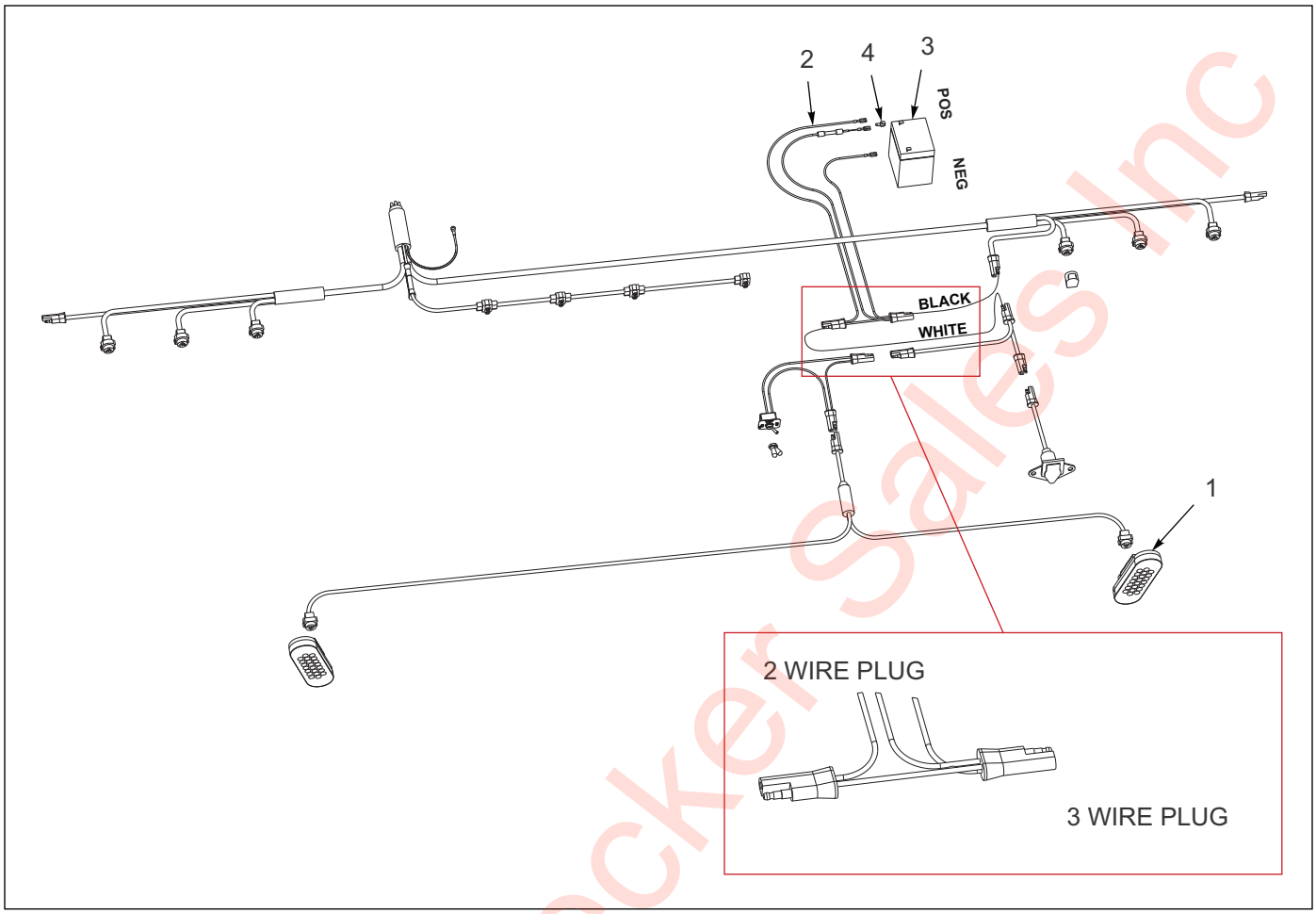

Figure 1-100: Strobe Light - Battery Backup Bumper

Strobe Light - Battery Backup Bumper

ITEM	PART NO.	DESCRIPTION	QTY.
	169830	BATTERY BCKUP BUMPER STROBE FI **(FRAME INSTALL ONLY)**	
1	155107	BUMPER STROBE LIGHT **(SEE PAGE 1-180)**	REF
2	156069	HARNESS ASSEMBLY, JUMPER TRIC CHG	1
3	3-128-010032	BATTERY BRAKE-AWAY	1
4	3-272-010157	ELECT ADAPTER CHAIR 1/4 PUSH ON	1

Eastern Wrecker Sales Inc

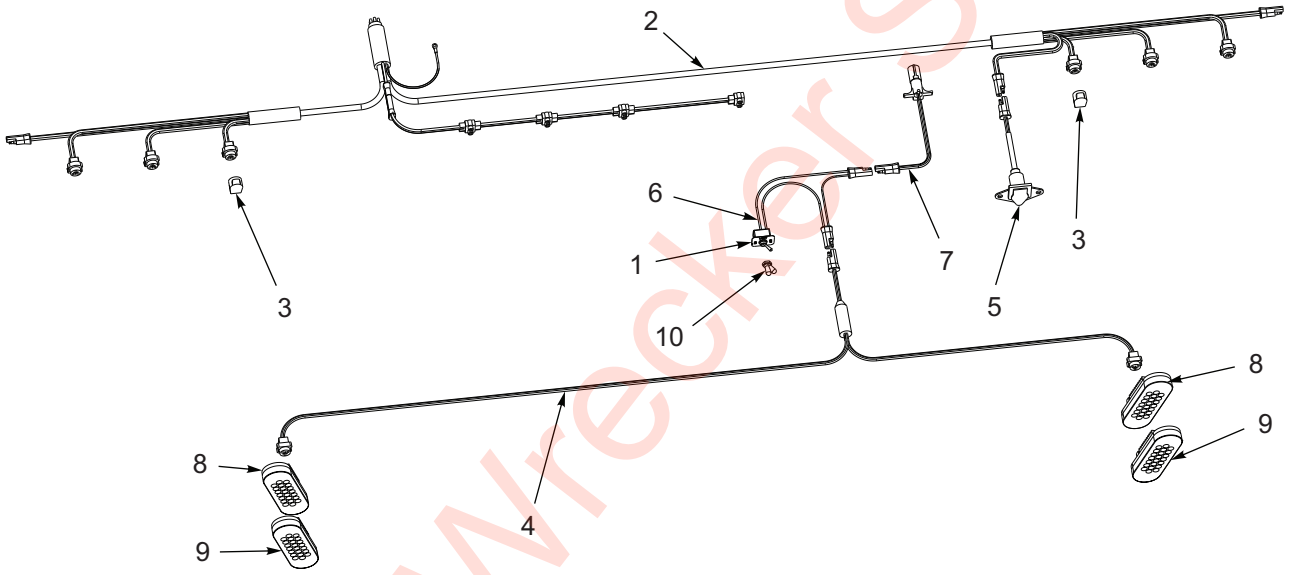

Figure 1-101: Strobe Light - Flip Axle Installation

Eastern Wrecker Sales Inc

Strobe Light - Flip Axle Installation

ITEM	PART NO.	DESCRIPTION	QTY.
	199129	STROBE, BUMPER, FLIP AXLE	
1	130116	DECAL, ON/OFF LIGHT	1
2	143104	HARNESS BUMPER GROTE	REF
3	144608	DUMMY PLUG FOR FEMALE PLUG	2
4	150114	HARNESS BUMPER STROBE GROTE	1
5	150116	HARNESS ASSY RCPT 800	REF
6	150117	SWITCH ASSY LIGHT GROTE	1
7	174071	HARNESS POWERFLIP STROBE	1
8	179902	LIGHT S/T/T RED CLEAR LENS GRT **(BEFORE 01/02/20)**	2
8	213295	LIGHT S/T/T RED CLEAR LENS GRT **(AFTER 01/02/20)**	2
9	187869	LIGHT STROBE YEL CLEAR LENS GR	2
10	81264	RUBBER BOOT FOR ELECT SWITCH	1

Eastern Wrecker Sales Inc

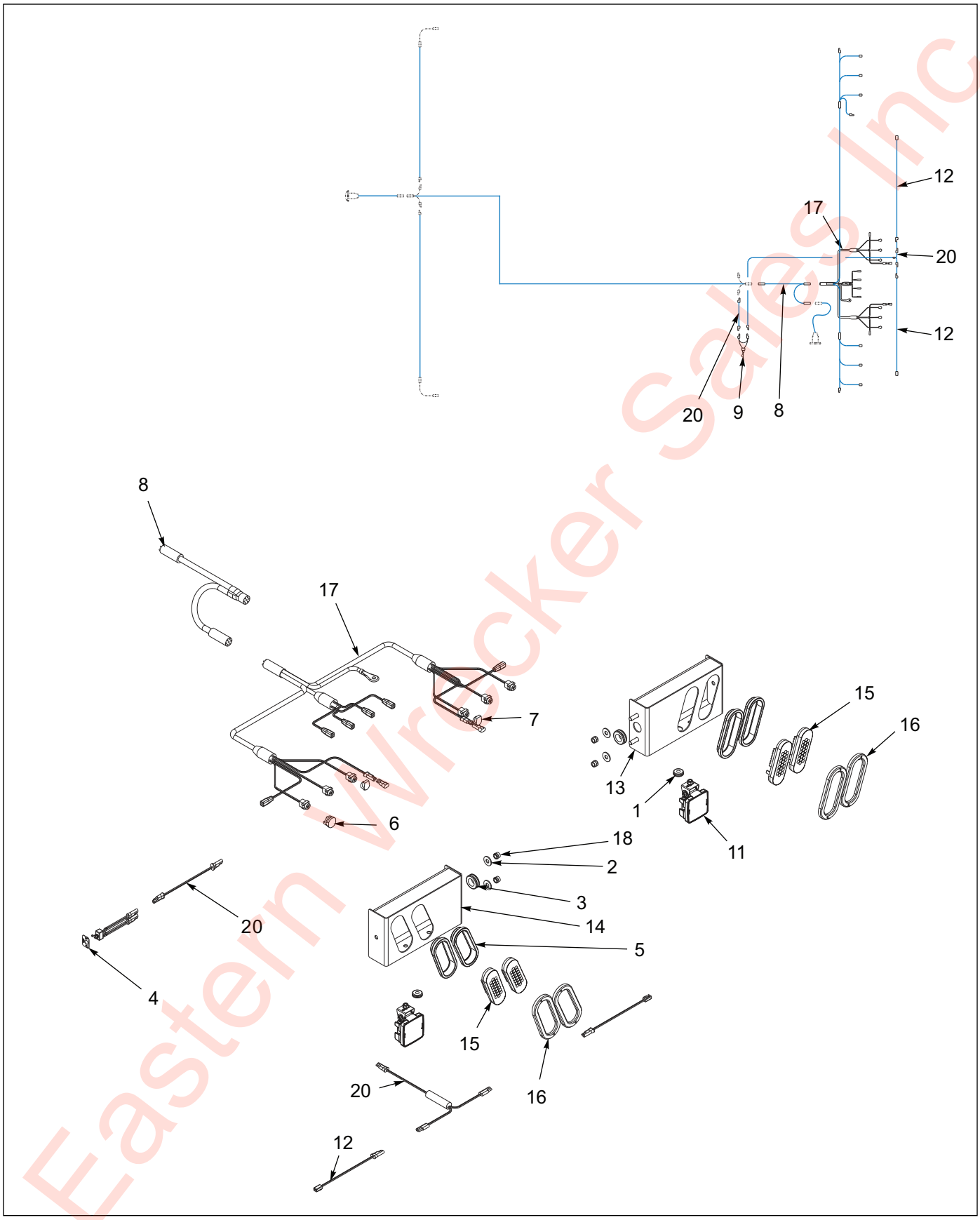

Figure 1-102: S/T/T Light Installation - 800E

Eastern Wrecker Sales Inc

S/T/T Light Installation - 800E

ITEM	PART NO.	DESCRIPTION	QTY.
	199717	LIGHT ASSY S/T/T 800E	
1	1-343-010001	GROMMET RUB 1-3/8ODX3/4IDX1/8	2
2	1-512-010005-09	NUT,HEX,SLFLKG, 1/2-13 GRB	4
3	1-861-010032-15	WASHER, FLAT 1/2 W ZP/CD	4
4	130116	DECAL, ON/OFF LIGHT	1
5	143114	GROMMET OVAL GROTE **(BEFORE 01/02/20)**	4
6	143121	DUMMY PLUG MALE/FEM BULLET	1
7	144608	DUMMY PLUG FOR FEMALE PLUG	2
8	146929	HARNESS Y SPLITTER GROTE	1
9	150117	SWITCH ASSY LIGHT GROTE	1
10	163342	GOOSENECK ASSY 855-12'-5"	REF
11	163996	LIGHT,12V SQUARE LED FLOOD	2
12	164052	HARNESS,60"BRANCH,WORK LIGHT	2
13	168712	MOUNT WLDMT RH S/T/T	1
14	168713	MOUNT WLDMT LH S/T/T	1
15	179902	LIGHT S/T/T RED CLEAR LENS GRT **(BEFORE 01/02/20)**	4
15	213295	LIGHT S/T/T RED CLEAR LENS GRT **(AFTER 01/02/20)**	4
16	180570	COVER CHROME OBLONG GROM **(BEFORE 01/02/20)**	4
16	213296	COVER CHROME OBLONG GROM **(AFTER 01/02/20)**	4
17	187859	HARNESS BUMPER MICRONOVA GROTE	1
18	237-2308-012	GROMMET, 1.125 ID	2
19	43029	HOSE WRAP AEROQUIP 1/4	3
20	169853	HARNESS T PWR BRANCH	1
21	199717FI	FIELD INSTALLATION KIT - 800E S/T/T LIGHT INSTALLATION **(NOT SHOWN)**	

Eastern Wrecker Sales Inc

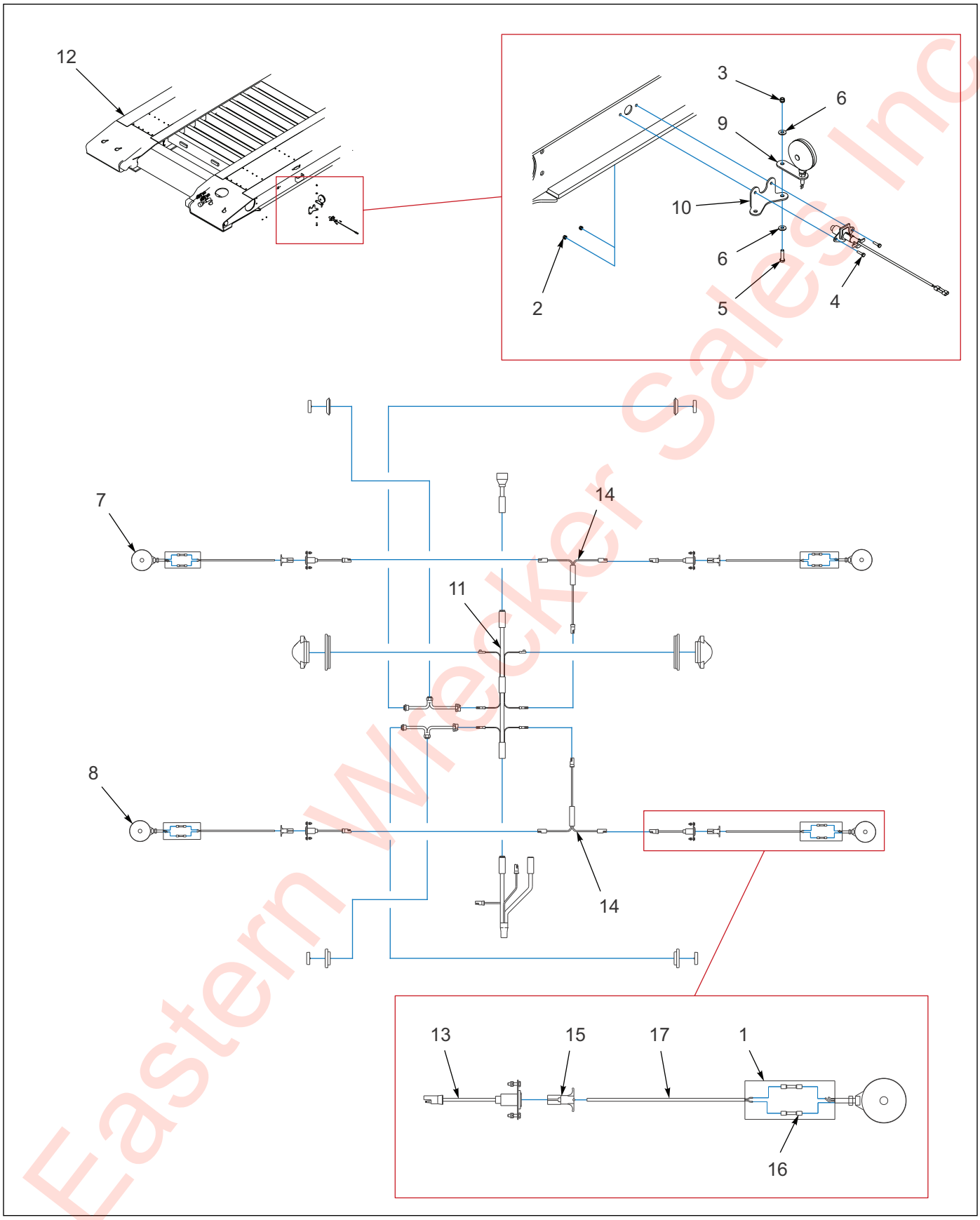

Figure 1-103: Web Mounted Four Corner Light Package

Eastern Wrecker Sales Inc

Web Mounted Four Corner Light Package

ITEM	PART NO.	DESCRIPTION	QTY.
	146932	WEB MOUNTED FOUR CORNER LIGHT PACKAGE	
1	0013007	TUBING, HEAT SHRINK	1
2	1-512-010005-01	NUT, HEX LOCK 1/4-20 GRB	8
3	1-512-010005-05	NUT, HEX LOCK 3/8-16 GRB	4
4	1-654-010047-06	SCREW, HEX HEAD CAP 1/4-20 X 1 GR5	8
5	1-654-010051-07	SCREW, HEX HEAD CAP 3/8-16 X 1-1/2 GR5	4
6	1-861-010032-11	WASHER, FLAT 3/8W	8
7	129893	LAMP, YELLOW TURN SIGNAL STUD MOUNT	2
8	129894	LAMP, RED TURN SIGNAL STUD MOUNT	2
9	139132	BRACKET, LAMP MOUNTING SWING	4
10	139133	BRACKET, LAMP MOUNTING STATIONARY	4
11	143102	HARNESS, MAIN	REF
12	-----	FRAME WELDMENT	REF
13	150116	PIGTAIL MARKER	4
14	167965	HARNESS, JUMPER T-POWER	2
15	3-272-010010	CONNECTOR, ELECT 4 POLE MALE	4
16	3-272-010021	ELECT BUTT SPLICE 16/14 W/ SEAL	8
17	W214S-1	CABLE, 2 WIRE 14AWG PVC JACKET	AR

Eastern Wrecker Sales Inc

Misc Options

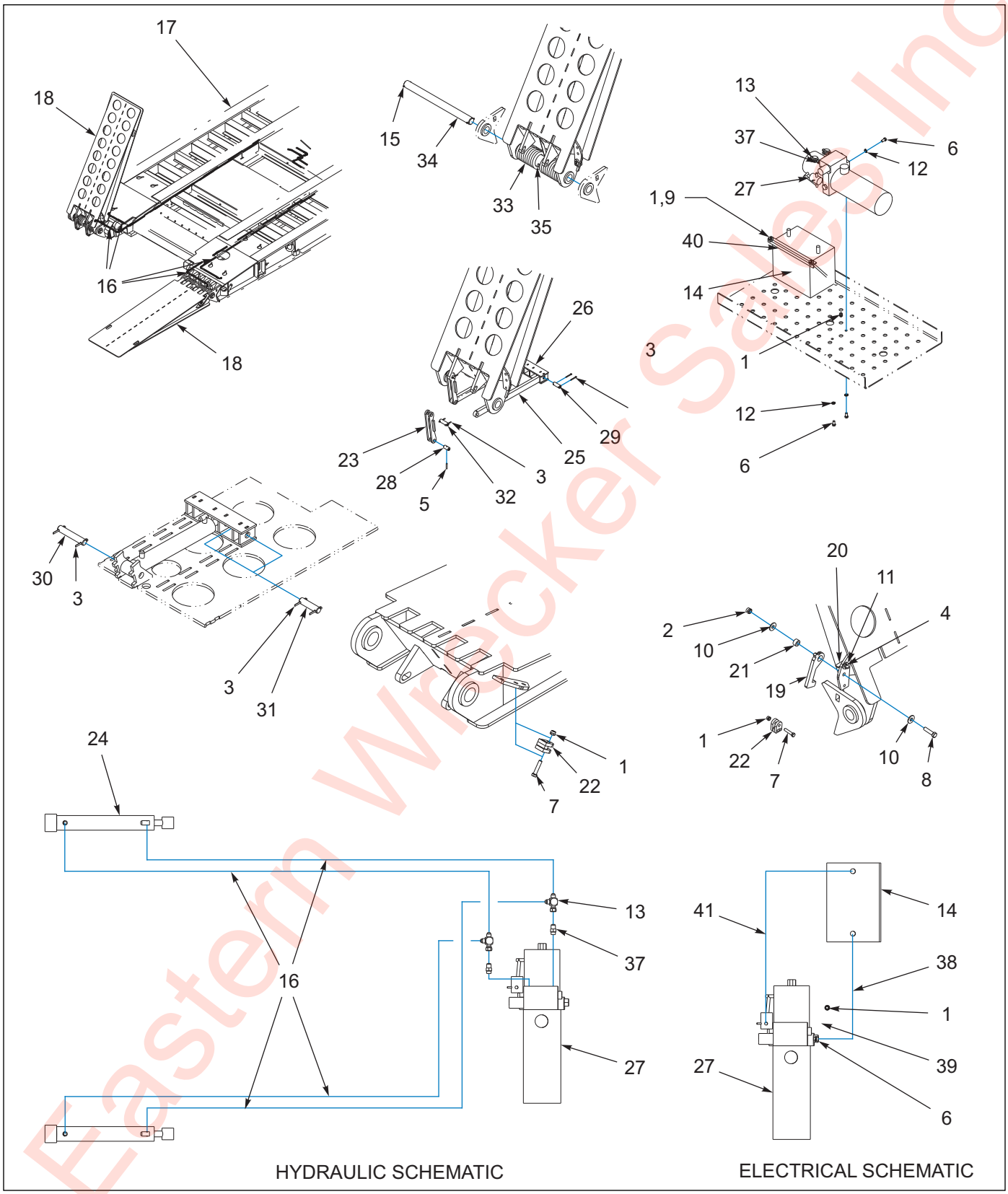

Figure 1-104: 6-1/2' Front Ramp Assembly - 855E HD

Eastern Wrecker Sales Inc

6-1/2’ Front Ramp Assembly - 855E HD

ITEM	PART NO.	DESCRIPTION	QTY.
	174639	6-1/2’ FRONT RAMP ASSEMBLY	
1	1-512-010005-05	NUT, HEX LOCK 3/8-16 GRB	7
2	1-512-010005-09	NUT, HEX LOCK 1/2-13 GRB	2
3	1-557-010362-51	PIN, COTTER 3/16 X 1-1/2	24
4	1-647-010004117	ROLL PIN, SLOTTED 1/8 X 1	2
5	1-647-010004217	ROLL PIN, SLOTTED 1/4 X 1-1/2	4
6	1-654-010051-03	SCREW, HEX HEAD CAP 3/8-16 X3/4 GR5	3
7	1-654-010051-08	SCREW, HEX HEAD CAP 3/8-16 X 1-3/4 GR5	4
8	1-654-010055-05	SCREW, HEX HEAD CAP 1/2-13 x 2 GR5	2
9	1-861-010032-11	WASHER, FLAT 3/8W	2
10	1-861-010032-15	WASHER, FLAT 1/2W	4
11	1-861-010032-16	WASHER, FLAT 9/16N	2
12	1-861-010034-11	WASHER, SPLIT LOCK 3/8	3
13	102-1158	ADAPTER, TEE	2
14	108196	BATTERY, 12 VOLT DEEP CYCLE	1
15	118650	ROLL PIN, SLOTTED 1/4 X 2-1/2	4
16	130642	HOSE ASSEMBLY 3/8 X 158	4
17	-----	FRAME WELDMENT	REF
18	173637	RAMP WELDMENT, 6 DEGREE	2
19	173650	LATCH, RAMP	2
20	173652	STOP, LATCH	2
21	173653	BUSHING, RAMP LATCH	2
22	173654	STOP RAMP WELDMENT	4
23	174611	PUSH BAR WELDMENT, FLIP	4
24	174612	CYLINDER, HYDRAULIC 1-1/2 X 8 **(SEE PAGE 1-190)**	2
25	174616	BASE PUSH BAR	4
26	174618	XBAR CONNECTOR WELDMENT	2
27	174628	HYDRAULIC UNIT	1
28	174632	PIN, PUSH BAR	4
29	174633	PIN, RAMP BAR	4
30	174634	PIN, RAMP CYL BASE	2
31	174635	PIN, RAMP CYL ROD	2
32	174636	PIN, RAMP/PUSH ROD	4
33	174638	SPRING, MODIFIED	4
34	174640	PIN, HINGE RAMP	2
35	174642	TUBE WELDMENT, SPRING SUPPORT	2
36	174648	HARNESS, HYDRAULIC UNIT CHARGE **(NOT SHOWN)**	1
37	202702-6-6S	ADAPTER, STRAIGHT	2
38	239-8113-18	CABLE, BATTERY NEGATIVE	1
39	239-8115-12	CABLE, BATTERY POSITIVE	1
40	3-120-010124	BATTERY CLAMP BRACKET	1
41	514-9045-30	CABLE, BATTERY POSITIVE	1

Eastern Wacker Sales Inc

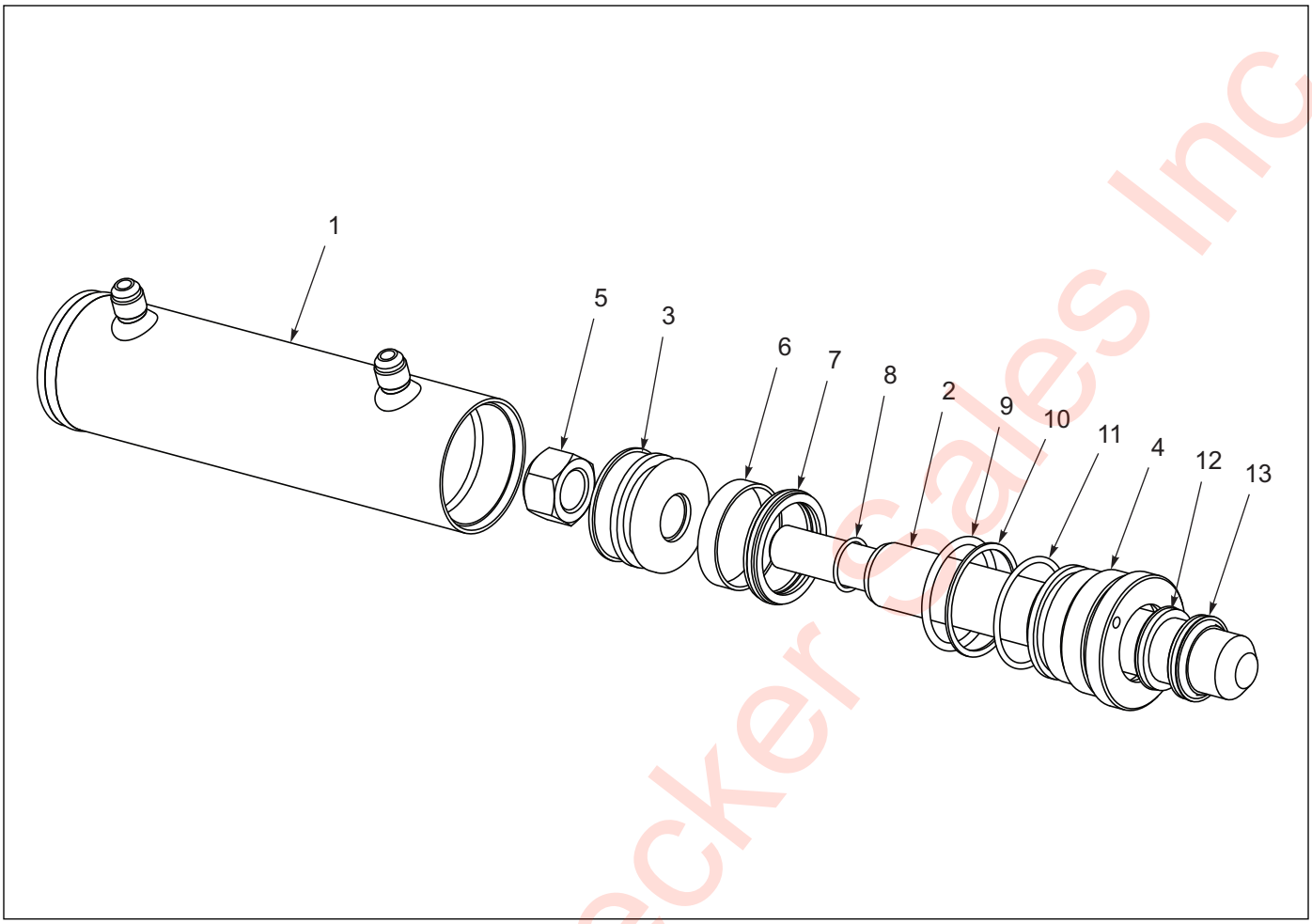

Figure 1-105: 1-1/2 x 8 Hydraulic Cylinder - 855E HD

1-1/2 X 8 Hydraulic Cylinder - 855E HD

ITEM	PART NO.	DESCRIPTION	QTY.
	174612	CYLINDER HYDRAULIC 1-1/2 X 8	2
1	-----	BUTT AND TUBE ASSEMBLY	1
2	175572	PISTON ROD ASSEMBLY	1
3	-----	PISTON	1
4	130064	GLAND	1
5	-----	LOCKNUT	1
6	-----	BEARING RING	1
7	-----	CROWN SEAL	1
8	-----	O-RING	1
9	-----	O-RING	1
10	-----	BU-WASHER	1
11	-----	O-RING	1
12	-----	U-CUP	1
13	-----	WIPER	1
14	130068	PACKING KIT **(ITEMS 6-13, NOT SHOWN)**	REF

Eastern Wrecker Sales Inc

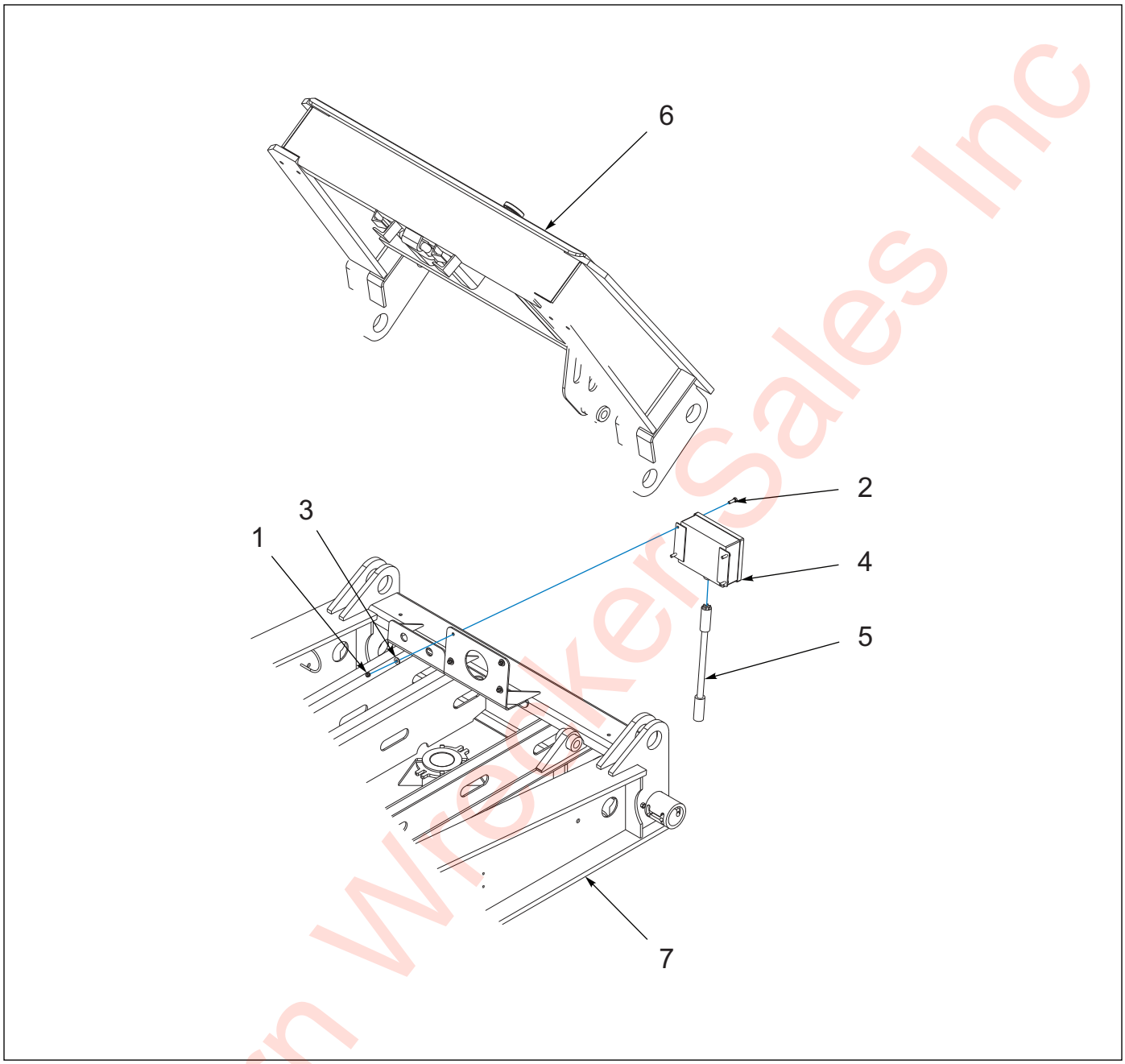

Figure 1-106: 24/12V Electrical Conversion Box Installation

24/12V Electrical Conversion Box Installation

ITEM	PART NO.	DESCRIPTION	QTY.
	174647	24/12V ELECTRICAL CONVERSION BOX	
1	1-512-010005-03	NUT, HEX LOCK 5/16-18 GRB	4
2	1-654-010049-05	SCREW, HEX HEAD CAP 5/16-18 X 1 GR5	4
3	1-861-010032-09	WASHER, FLAT 5/16W	4
4	137107	VOLTAGE CONVERTER BOX 12/24V	1
5	143166	HARNESS EXTENSION, 48”	1
6	-----	FLIP WELDMENT, G/N	REF
7	174650	MODIFY G/N 855	1

Eastern Wrecker Sales Inc

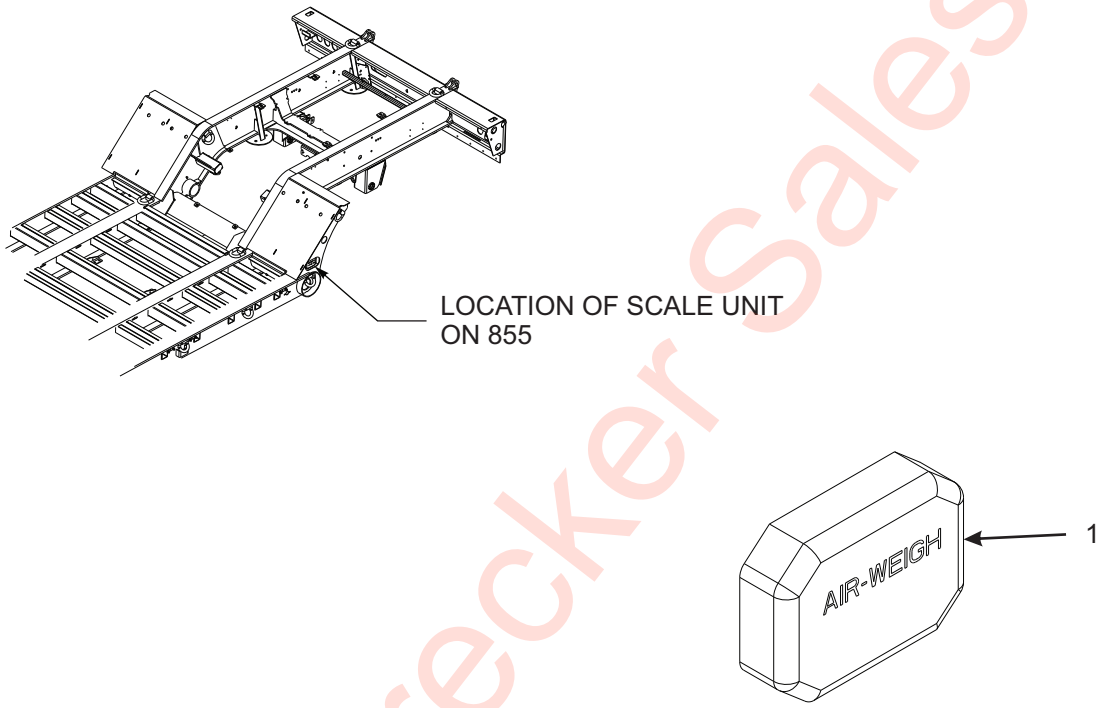

Figure 1-107: Air Weigh Scale Installation

Air Weigh Scale Installation

ITEM	PART NO.	DESCRIPTION	QTY.
	175366	SCALE INSTALLATION, QUICKLOAD RIGID	
1	175357	SCALE KIT, AIR QUICKLOAD	1
2	175361	CABLE, TRAILER POWER ABS T-BREAKOUT 15’	1
3	175362	TRAILER SCALE, QUICKLOAD	1
4	166924	DECAL, AW5800 TRAILER SIDE - M	1
5	175363	SPRING HOSE CLAMP 1/4OD	2
6	175365	AIR LIN 1/4OD	10’
7	3-395-010001	HOSE, CF FIRE **(NOT SHOWN)**	AR
8	204675	COMLINK CABLE - COMMUNICATES WITH TRUCK **(OPTIONAL)**	AR

Eastern Wrecker Sales Inc

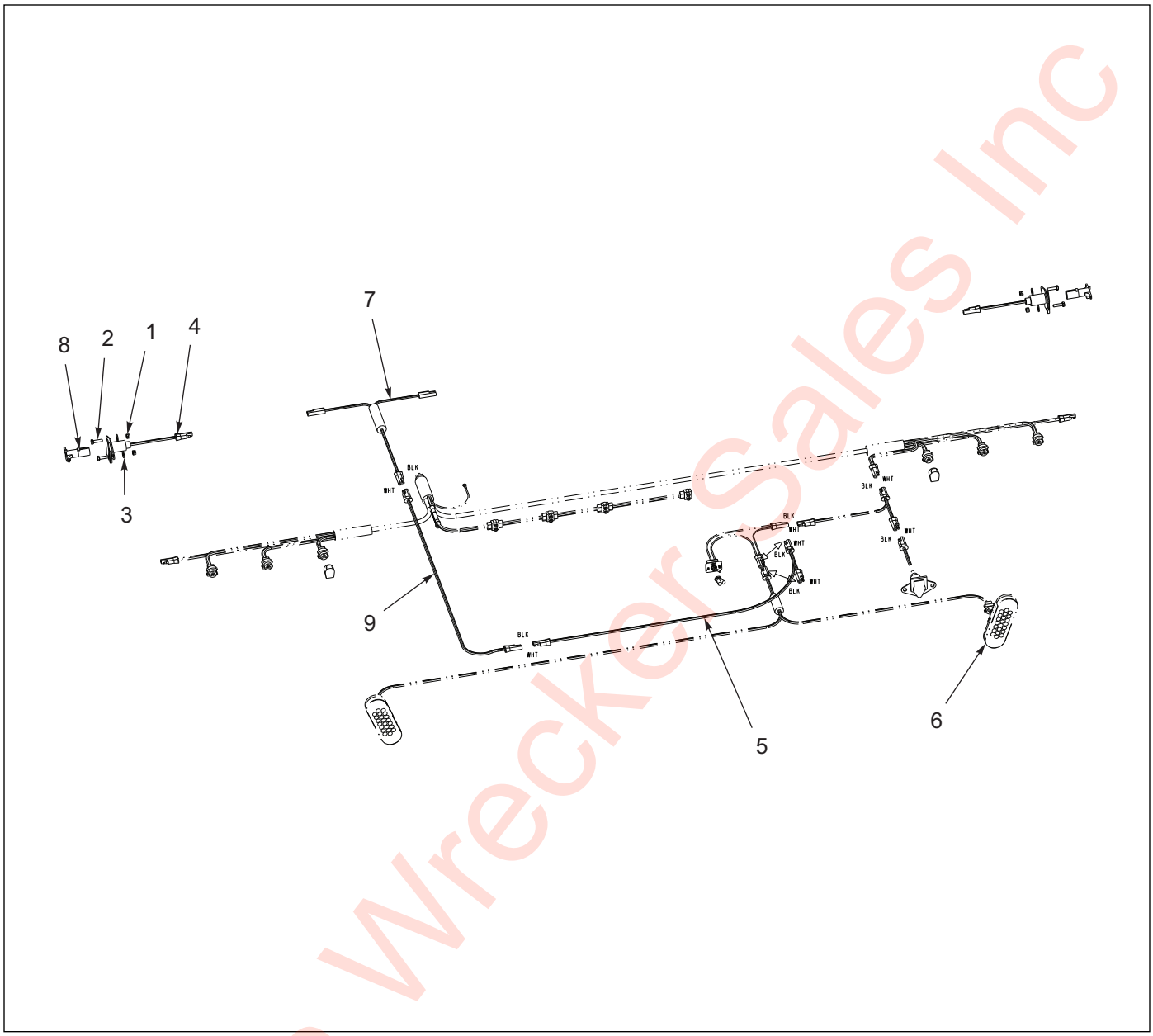

Figure 1-108: Auxiliary Mid Electrical Outlet

Auxiliary Mid Electrical Outlet

ITEM	PART NO.	DESCRIPTION	QTY.
	156502	AUXILIARY MID ELECTRICAL OUTLET	
1	1-512-010005-01	NUT, HEX LOCK 1/4-20	4
2	1-654-010047-06	SCREW, HEX HEAD CAP 1/4-20 X 1 GR5	4
3	1-861-010032-07	WASHER, FLAT 1/4W	4
4	150116	HARNESS/RECEPTACLE ASSEMBLY	2
5	150118	HARNESS, JUMPER BRANCH	1
6	-----	STROBE, BUMPER	REF
7	167965	HARNESS, JUMPER T-POWER	1
8	3-272-010010	CONNECTOR ELECT 4 POLE MALE	2
9	3-368-010252	HARNESS ASSEMBLY, BULKHEAD LIGHT	1

Eastern Wrecker Sales Inc

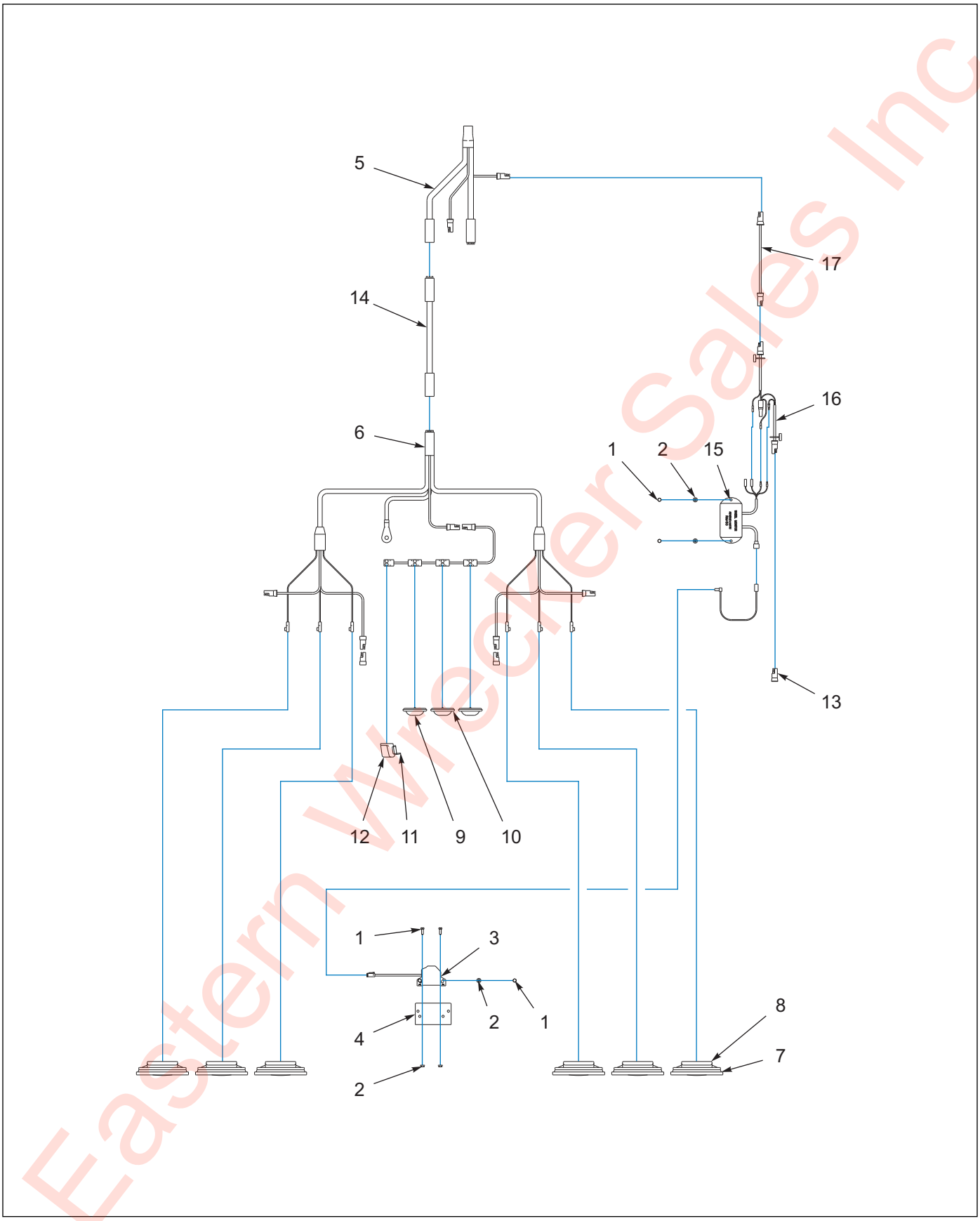

Figure 1-109: Backup Alarm Installation

Eastern Wrecker Sales Inc

Backup Alarm Installation

ITEM	PART NO.	DESCRIPTION	QTY.
	175355	BACKUP ALARM INSTALLATION	
1	1-654-010047-04	SCREW, HEX HEAD CAP 1/4-20 X 3/4 GR5	6
2	108417	NUT, HEX FLANGE SPIRALOCK 1/4-20	6
3	117997	ALARM, dB ADJUSTING SMART BACKUP	1
4	127991	BRACKET, BACKUP ALARM MOUNT	1
5	143103	HARNESS, E-CHAIN	REF
6	143104	HARNESS, BUMPER	REF
7	143113	LIGHT, RED LED OVAL STT	REF
8	143114	GROMMET OVAL GROTE **(BEFORE 01/02/20)**	REF
9	143115	LIGHT, RED LED RECTANGLE CLEARANCE	REF
10	143116	GROMMET, RECTANGLE	REF
11	143117	LIGHT, CLEAR LED LICENSE	REF
12	143118	BRACKET, LIGHT LICENSE	REF
13	143121	DUMMY PLUG MALE/FEM BULLET	1
14	143166	HARNESS, EXT 48”	REF
15	150072	SENSOR, DIRECTIONAL CABLE BACKUP	1
16	150074	HARNESS, MODULE/ALARM	1
17	3-368-010252	HARNESS ASSEMBLY, BULKHEAD EXT	1

Eastern Wrecker Sales Inc

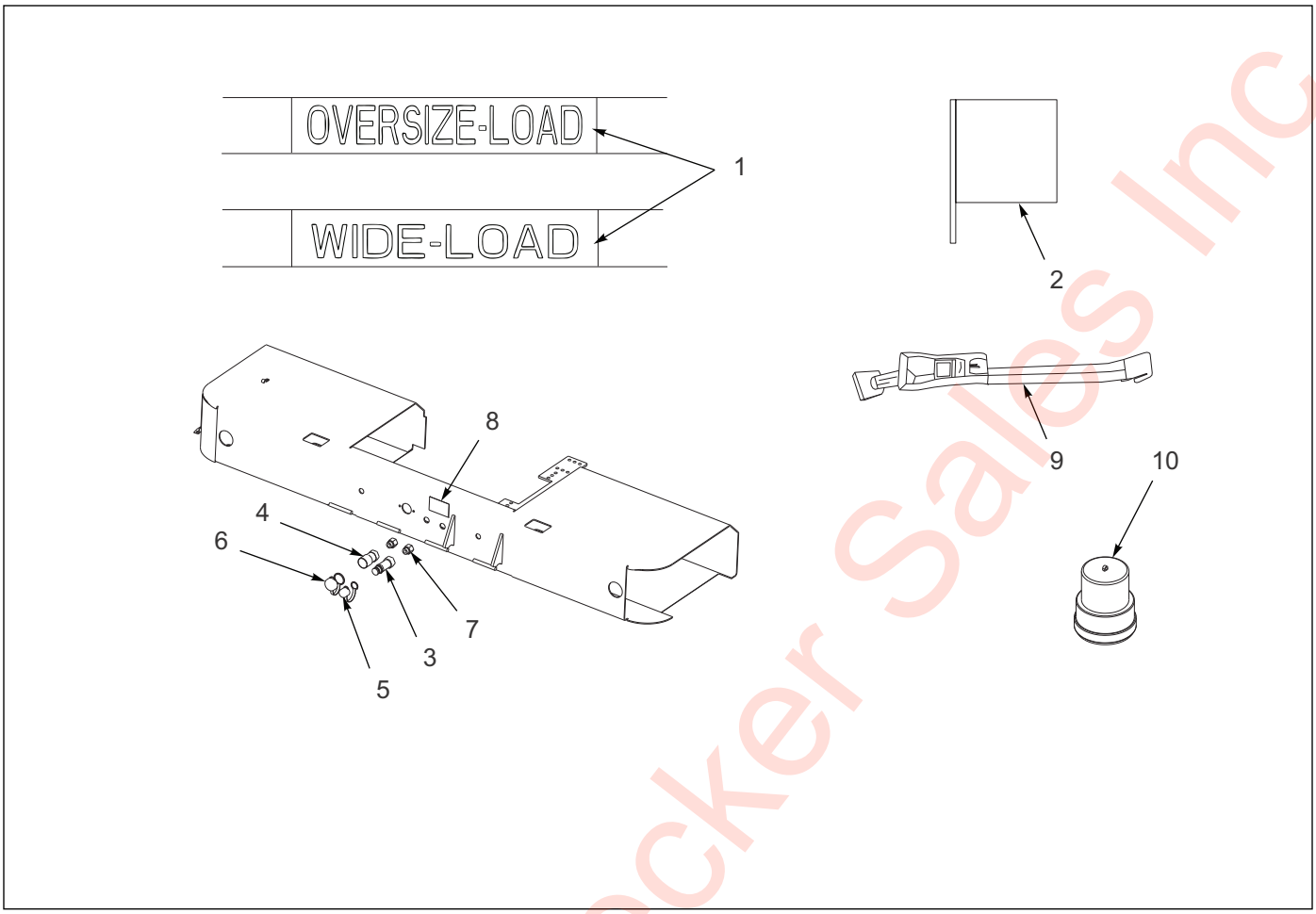

Figure 1-110: Banner Flag Kit Assembly

Banner Flag Kit Assembly

ITEM	PART NO.	DESCRIPTION	QTY.
	105297	BANNER/FLAG KIT WIDE/OVS LS **(ITEMS 1 & 2)**	
1	106655	BANNER WIDE/OVERSIZE LOAD	1
2	106654	FLAG, OVERWIDTH	6
3	105902	HYDRAULIC CONVERSION KIT, BALL TO FLAT **(ITEMS 4-8)**	1
4	105479	COUPLER, FLAT FACE MALE NOSE	1
5	105480	COUPLER, FLAT FACE FEMALE NOSE	1
6	105481	COUPLER, DUST CAP MALE	1
7	105482	COUPLER, DUST CAP FEMALE	1
8	2216-12-12S	INTERNAL PIPE, O-RING BOSS	2
9	105822	DECAL, HYD COUPLER	1
10	100696	STRAP, RATCHET ASSEMBLY **(NO PARTS BREAKDOWN)**	2
11	160070	WARNING LIGHT, AMBER MAG BASE	2

Eastern Wrecker Sales Inc

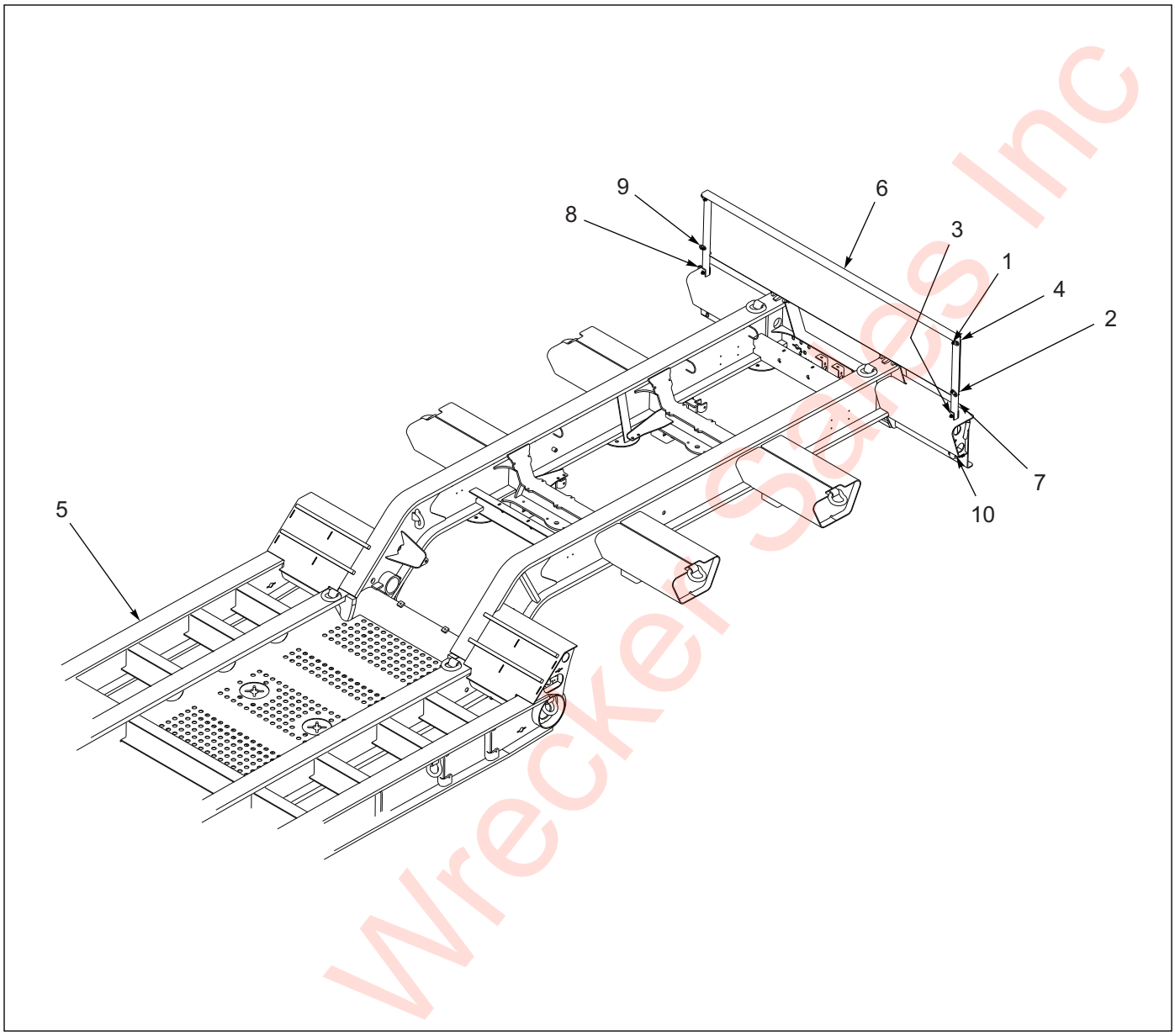

Figure 1-111: Banner Load Assembly

Banner Load Assembly

ITEM	PART NO.	DESCRIPTION	QTY.
	175951	LOAD, BANNER ASSEMBLY	
1	1-512-010005-05	NUT, HEX, SLFLKG GRB 3/8-16	3
2	1-654-010051-11	SCREW HX CP 3/8-16X2-1/2 G5ZP	2
3	1-654-010051-12	SCREW,HEX CAP,3/8-16UNCX2-3/4	2
4	1-861-010032-01	WASHER FLAT, 3/8W	5
5	-----	FRAME WELDMENT	REF
6	175950	SUPPORT WIDE LOAD BANNER 855	1
7	175952	TUBE LOAD BANNER	2
8	175953	STOP LOAD BANNER	4
9	175955	ANCHOR BANNER	4
10	516-22PTL	RETAINING PIN MUD FLAP	2

Eastern Wrecker Sales Inc

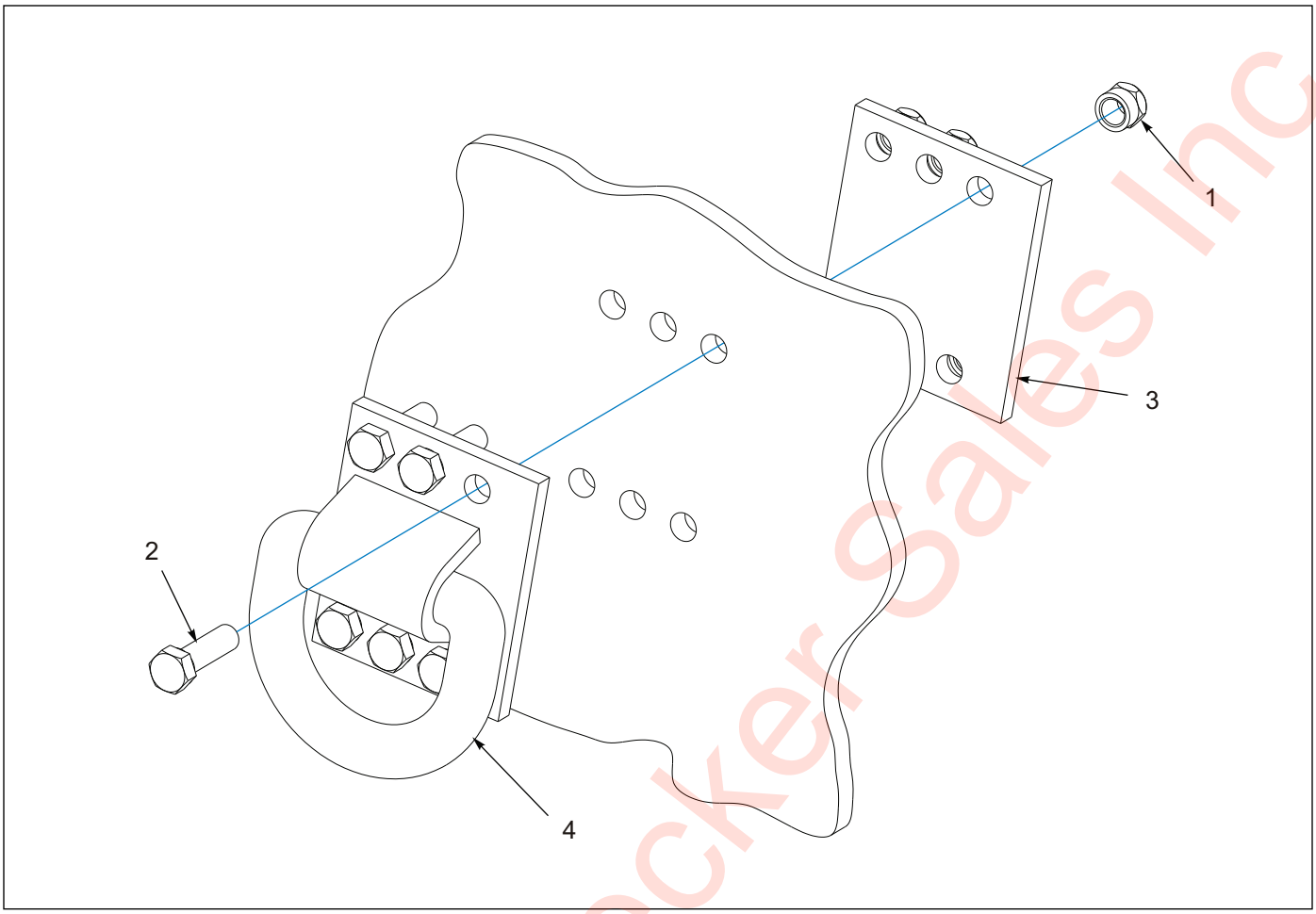

Figure 1-112: Bolt-On D-Ring Assembly

Bolt-on D-ring Assembly

ITEM	PART NO.	DESCRIPTION	QTY.
	111390	D-RING ASSEMBLY, BOLT-ON	
1	1-512-010005-09	NUT, HEX LOCK 1/2-13 GRB	6
2	1-654-010055-04	SCREW, HEX HEAD CAP 1/2-13 X1-3/4 GR5	6
3	111382	MOUNT, TIE DOWN	1
4	3-793-010040	TIE DOWN, WINCH	1

Eastern Wrecker Sales Inc

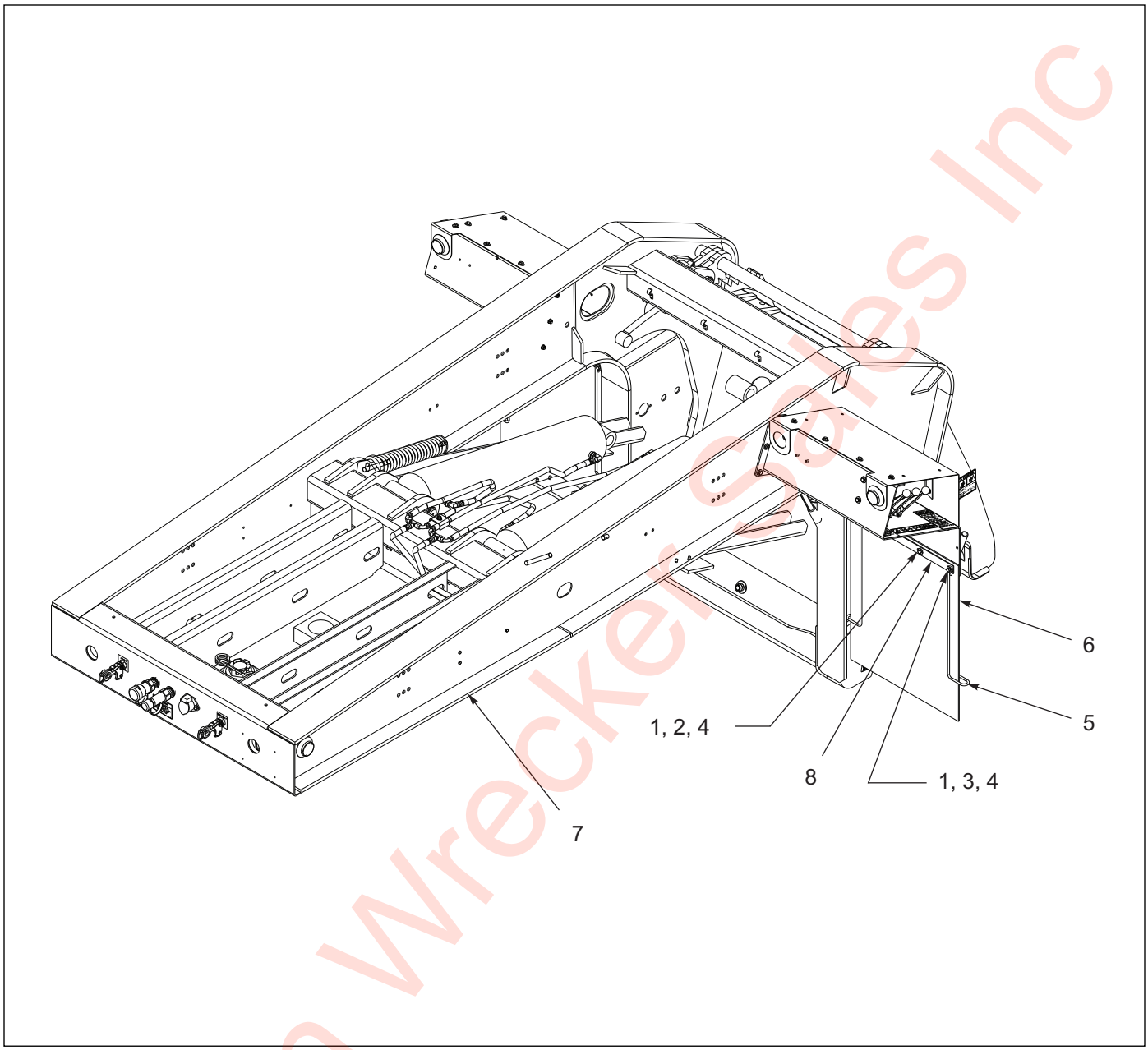

Figure 1-113: Gooseneck Mud Flaps - 855E

Gooseneck Mud Flaps - 855E

ITEM	PART NO.	DESCRIPTION	QTY.
	162066	GOOSENECK MUD FLAPS	
1	1-510-010001	NUT, FLANGE HEAD SERRATED 3/8-16	8
2	1-654-010051-06	SCREW, HEX HEAD CAP 3/8-16 X 1-1/4 GR5	4
3	1-654-010051-07	SCREW, HEX HEAD CAP 3/8-16 X 1-1/2 GR5	4
4	1-861-010032-11	WASHER, FLAT 3/8W	16
5	128886	BRACKET, ANTI-SAIL MUD FLAP	2
6	131195	MUD FLAP, BLACK POLYMER 24 X 30	2
7	160367	GOOSENECK ASSEMBLY, 13’	REF
8	3-762-010017	CLAMP, MUD FLAP	2

Eastern Wrecker Sales Inc

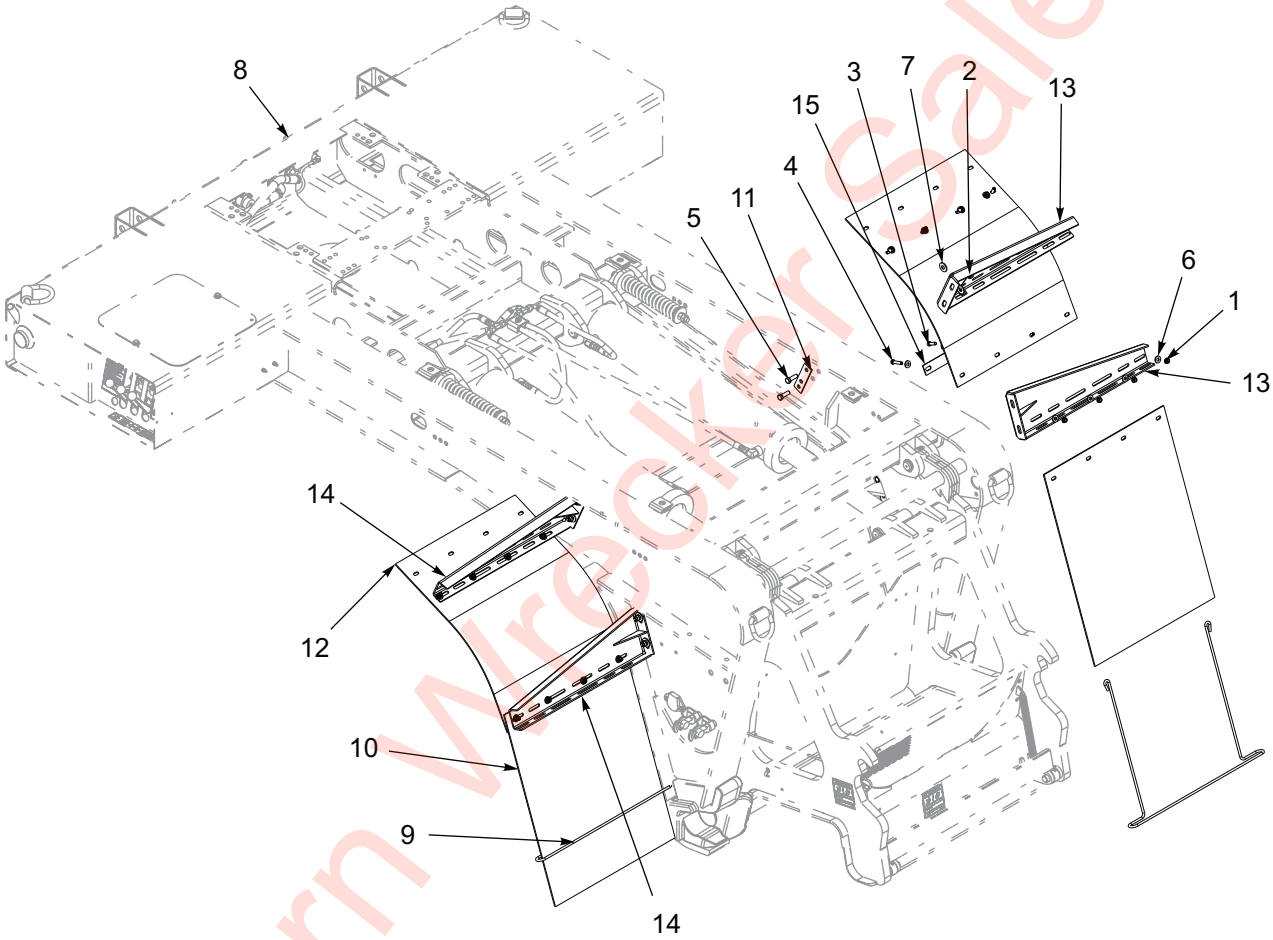

Figure 1-114: Gooseneck Mud Flap Installation

Eastern Wrecker Sales Inc

Gooseneck Mud Flap Installation

ITEM	PART NO.	DESCRIPTION	QTY.
	142065	MUD FLAP INSTL 825-835 G/N	
1	1-510-010001	NUT, 3/8-16 UNC FLANGE LOCK	16
2	1-512-010005-09	NUT,HEX,SLFLKG, 1/2-13 GRB	8
3	1-654-010051-06	SCREW,HEX CAP 3/8-16UNCX1-1/4	12
4	1-654-010051-08	SCREW,HEX CAP,3/8-16X1-3/4 G	4
5	1-654-010055-03	SCREW,HEX CAP,1/2-13UNCX1-1/2	8
6	1-861-010032-11	WASHER, FLAT 3/8 W ZP/CD	32
7	1-861-010032-15	WASHER, FLAT 1/2 W ZP/CD	8
8	-----	GOOSNECK ASSEMBLY	REF
9	128886	BRACKET ANTI-SAIL MUD FLAP	2
10	131195	MUD FLAP BLACK POLYMER 24X30	2
11	136908	DOUBLER	4
12	142064	MUD FLAP POLYMER MOD 24X30	2
13	194148	WLDMT MNT FNDR/MUD FLAP RH 835	2
14	194149	WLDMT MNT FNDR/MUD FLAP LH 835	2
15	3-762-010017	CLAMP MUD FLAP	4

Eastern Wrecker Sales Inc

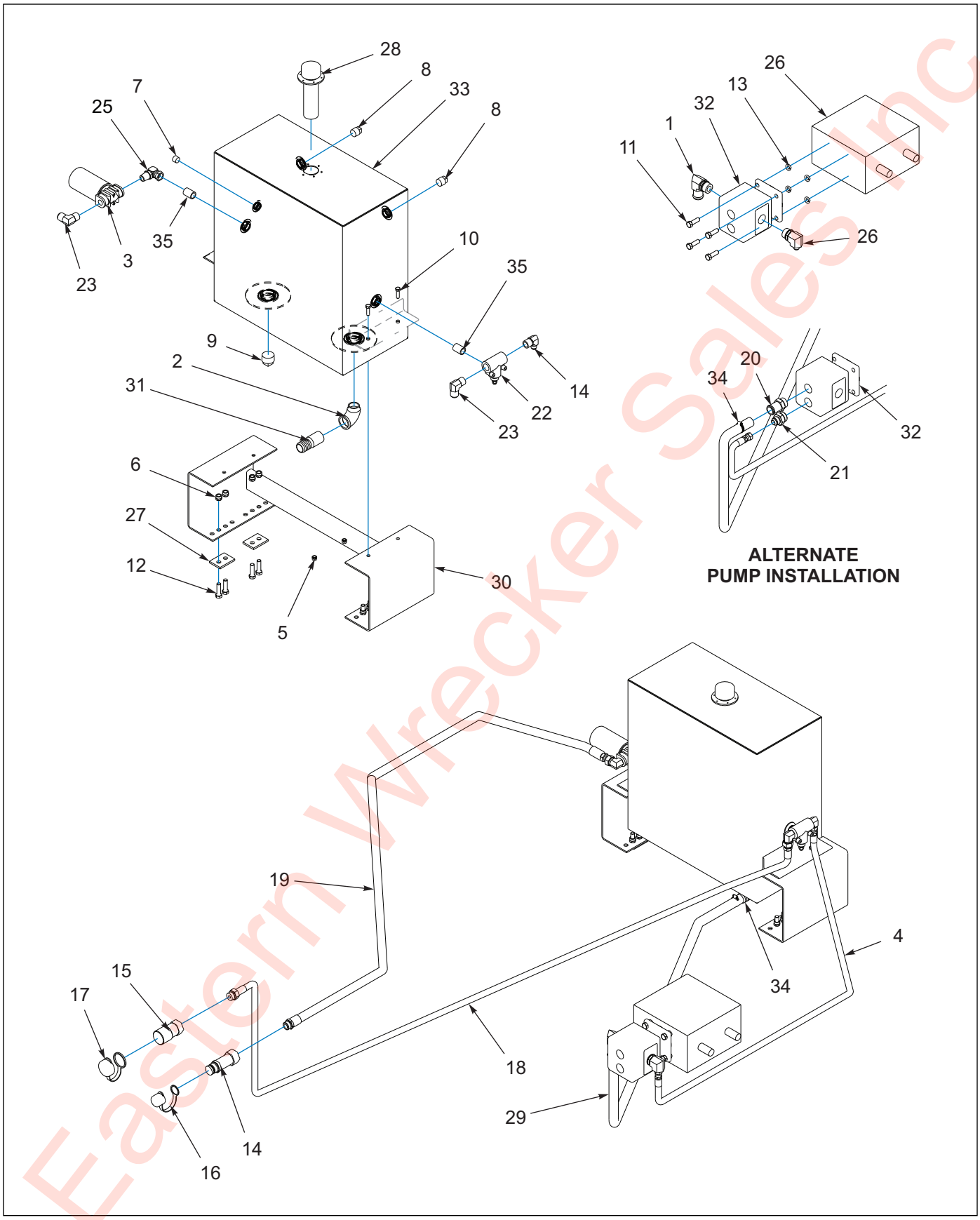

Figure 1-115: Hydraulic Wet Kit

Eastern Wrecker Sales Inc

Hydraulic Wet Kit

ITEM	PART NO.	DESCRIPTION	QTY.
	107498	HYDRAULIC WET KIT W/ PTO INSTALLED	
	107499	HYDRAULIC WET KIT W/ PTO NOT INSTALLED	
	107500	HYDRAULIC WET KIT W/O PTO NOT INSTALLED	
1	1-007-010006	ELBOW 90, 1-5/16 O-RING 1-1/4 HOSE	1
2	1-1/4ST ELL	BLACK PIPE ELBOW 90 ST	1
3	1-295-010001	FILTER, RETURN	1
	1-295-010002	FILTER ELEMENT	1
4	1-397-010301100	HOSE ASSEMBLY 1/2 X 100	1
5	1-512-010005-05	NUT, HEX LOCK 3/8-16 GRB	4
6	1-512-010005-09	NUT, HEX LOCK 1/2-13 GRB	8
7	1-560-010002-04	PIPE PLUG 1/2	1
8	1-560-010002-05	PIPE PLUG 3/4	2
9	1-560-010002-07	PLUG, BLACK PIPE 1-1/4 SQ HEAD	1
10	1-654-010051-06	SCREW, HEX HEAD CAP 3/8-16 X 1-1/4 GR5	4
11	1-654-010055-03	SCREW, HEX HEAD CAP 1/2-13 X 1-1/2 GR5	4
12	1-654-010055-04	SCREW, HEX HEAD CAP 1/2-13 X 1-3/4 GR5	8
13	1-861-010034-13	WASHER, SPLIT LOCK 1/2	4
14	105479	COUPLER, FLAT FACE MALE NOSE	1
15	105480	COUPLER, FLAT FACE FEMALE BODY	1
16	105481	COUPLER, DUST CAP MALE	1
17	105482	COUPLER, DUST CAP FEMALE	1
18	106759	HOSE ASSEMBLY 1/2 X 164	1
19	106760	HOSE ASSEMBLY 3/4 X 164	1
20	107513	ADAPTER	1
21	12-16 070120	ADAPTER	1
22	125130	RD12D HYD BY PASS SRDD	1
23	2024-12-12S	ADAPTER 90	2
24	2024-12-8S	ADAPTER, 90	1
25	2047-12-12S	ELBOW, 90 SWIVEL	1
26	2062-16-8S	ADAPTER, 90	1
27	3-120-010461	BRACKET, HYD TANK MOUNT SUPPORT	4
28	3-162-010001	FILLER-BREATHER-STRAINER ASSEMBLY	1
29	3-399-010001	HOSE, 1-1/4 SUCTION	8’
30	3-482-010503	TANK MOUNT	1
31	3-561-010001	HOSE BARB 1-1/4	1
32	3-591-010001	HYDRAULIC GEAR PUMP	1
33	3-786-010043	TANK, HYDRAULIC	1
34	6828	IDEAL HOSE CLAMP	2
35	C3069X12	NIPPLE, HEX	2
36	PTO	POWER TAKE OFF	1,0

Eastern Wrecker Sales Inc

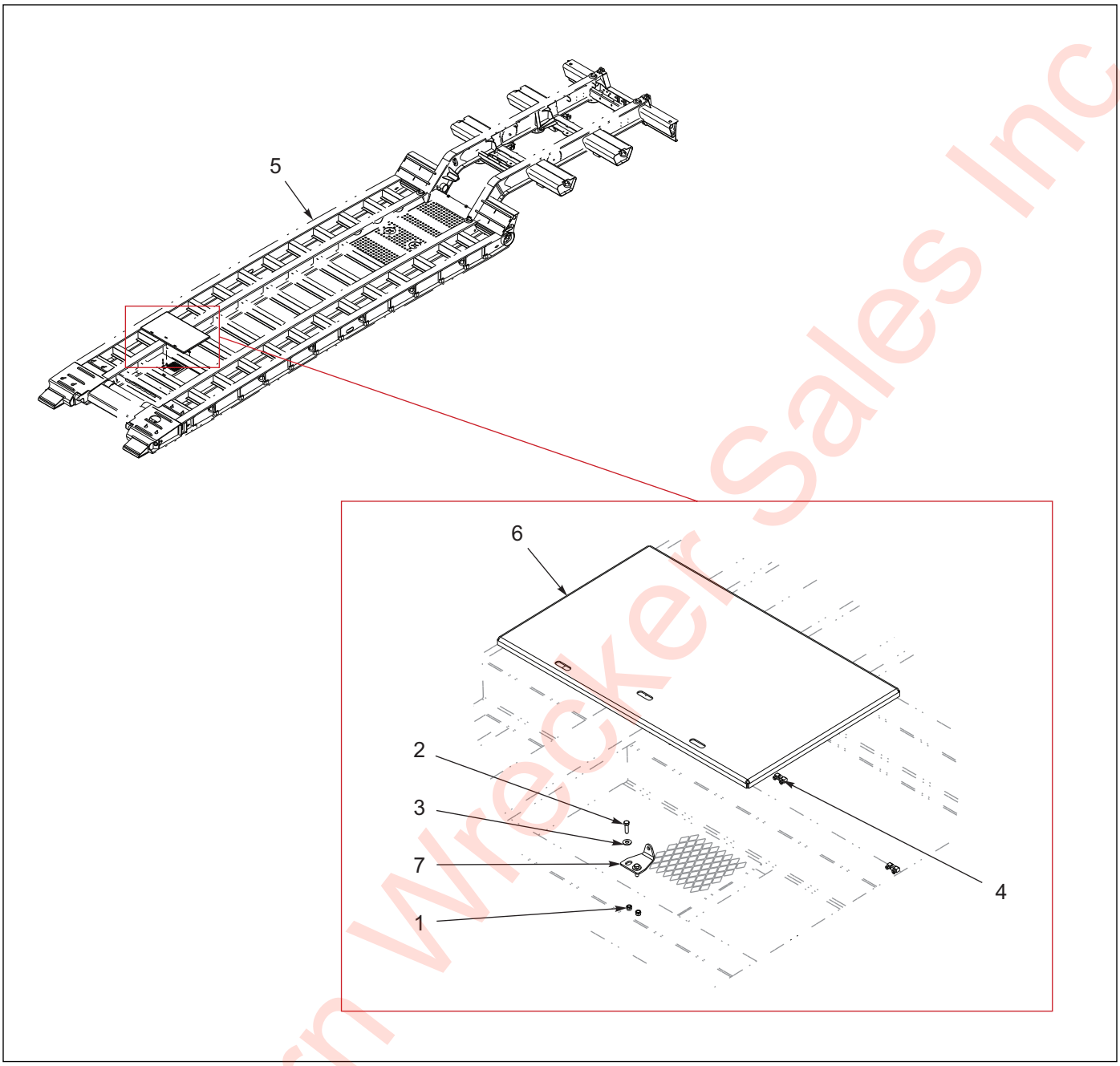

Figure 1-116: Lid Assembly - Storage Area Center

Lid Assembly - Storage Area Center

ITEM	PART NO.	DESCRIPTION	QTY.
	170412	LID ASSEMBLY, STORAGE AREA CENTER	
1	1-512-010005-05	NUT, HEX LOCK 3/8-16 GRB	1
2	1-654-010051-06	SCREW, HEX HEAD CAP 3/8-16 X 1-1/4 GR5	5
3	1-861-010032-11	WASHER, FLAT 3/8W	5
4	12412408	HINGE, TOOL BOX DOOR	3
5	----	FRAME WELDMENT	REF
6	170411	LID, STORAGE AREA CENTER	1
7	3-120-010498	BRACKET, LID LOCK	1

Eastern Wrecker Sales Inc

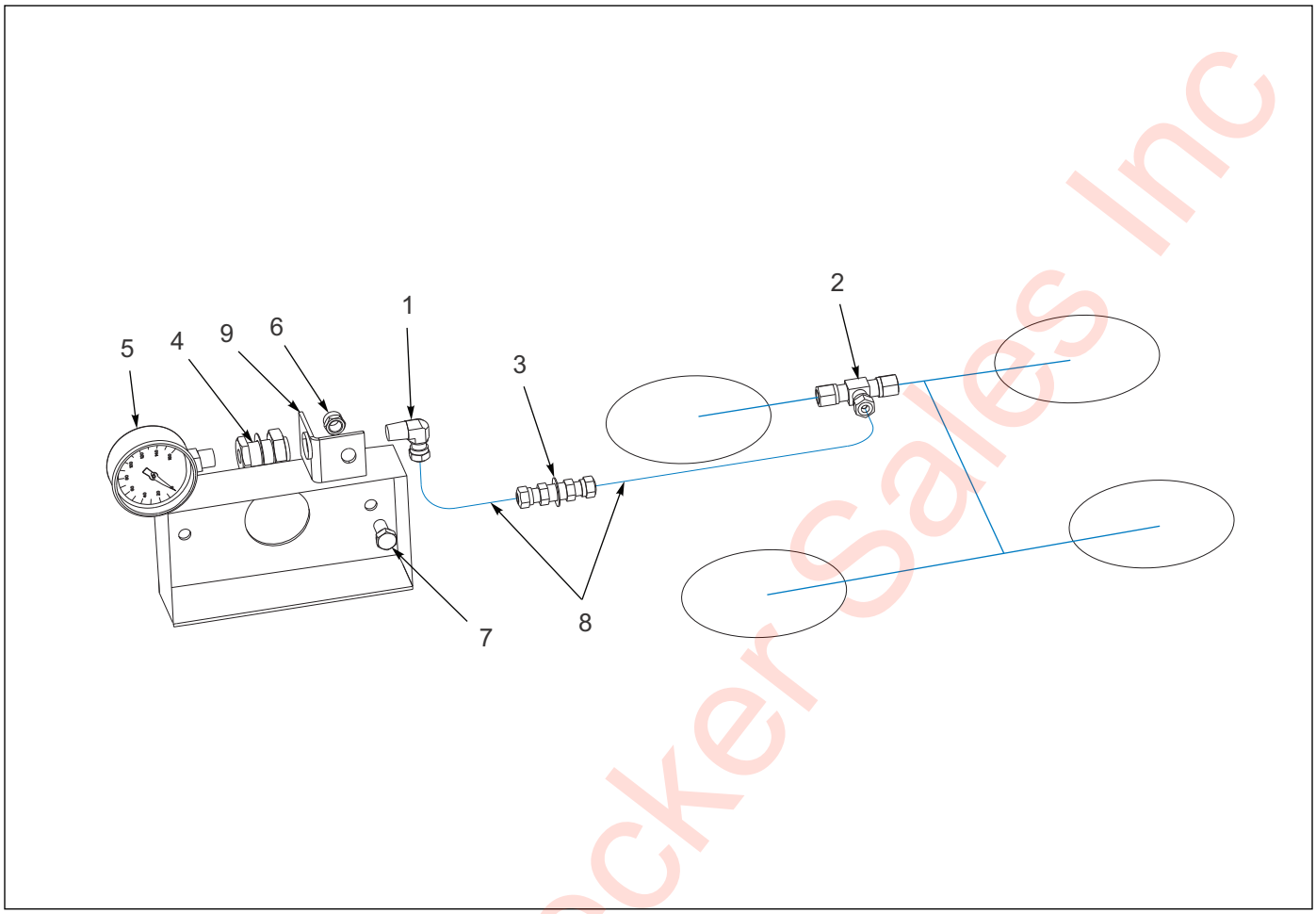

Figure 1-117: Pressure Gauge Installation

Pressure Gauge Installation

ITEM	PART NO.	DESCRIPTION	QTY.
	128601	PRESSURE GAUGE INSTALLATION	
1	1-297-010008-07	FITTING, AIR 90	1
2	1-297-010010-04	FITTING, AIR UNION TEE	1
3	1-297-010014-02	FITTING, AIR	1
4	1-297-010022-02	FITTING, AIR ANCHOR	1
5	1-323-010008	GAUGE, PRESSURE 0 - 160 PSI	1
6	1-512-010005-05	NUT, HEX LOCK 3/8-16 GRB	1
7	1-654-010051-03	SCREW, HEX HEAD CAP 3/8-16 X 3/4 GR5	1
8	1-833-010002	TUBING NYLON 3/8	AR
9	3-120-010445	BRACKET, PRESSURE REGULATOR	1

Eastern Wrecker Sales Inc

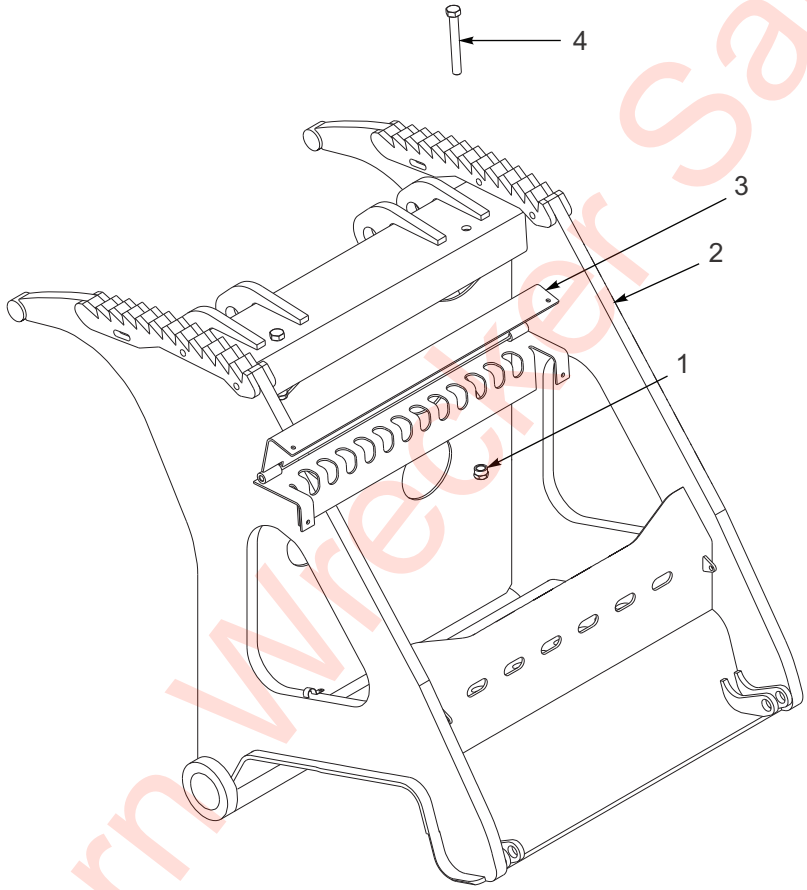

Figure 1-118: Rack and Tray Installation - 855E

Eastern Wrecker Sales Inc

Rack and Tray Installation - 855E

ITEM	PART NO.	DESCRIPTION	QTY.
	162051	RACK AND TRAY INSTALLATION 855C/B	
1	1-512-010005-15	NUT, HEX LOCK 3/4-10 GRB	2
2	160396	CARRIER WELDMENT	REF
3	162049	RACK WELDMENT CHAIN/BINDER	1
4	W908409-4	SCREW, HEX HEAD CAP 3/4-10 X 6 GR5	2

Eastern Wrecker Sales Inc

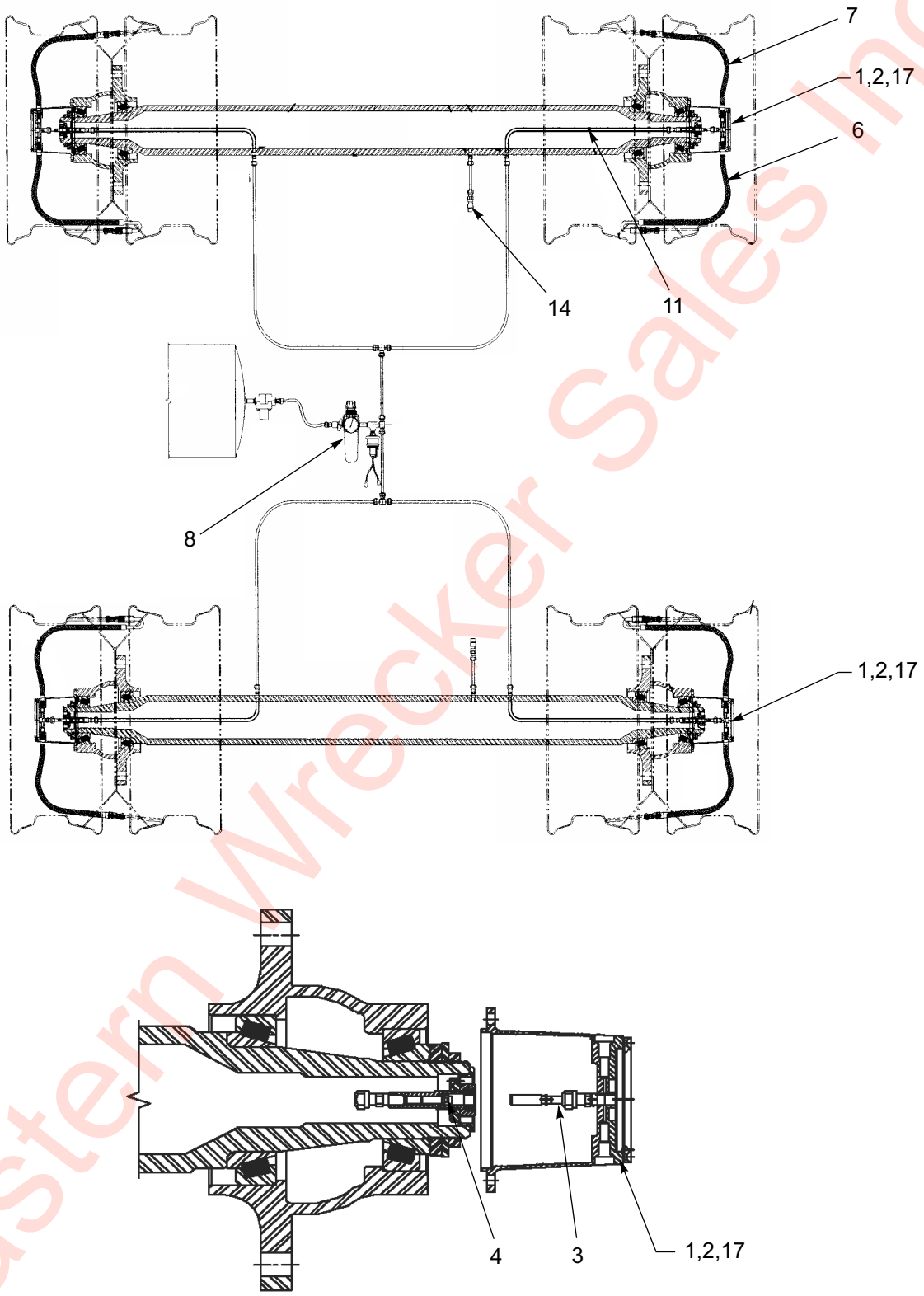

Figure 1-119: Tire Inflation System

Eastern Wrecker Sales Inc

Tire Inflation System

ITEM	PART NO.	DESCRIPTION	QTY.	
	157700	TIRE INFLATION SYSTEM FLIP AXLE	*	
	157703	TIRE INFLATION SYSTEM 3AX		*
1	139529	HUB CAP ASSEMBLY, LOW PROFILE 5.5” OIL	2	6
2	157704	GASKET, HUB CAP	2	6
3	157705	ROTATING SHAFT, UNIVERSAL	2	6
4	157706	SPINDLE PLUG, 1.75”	2	6
5	157707	AIR CYLINDER ASSEMBLY **(NOT SHOWN)**	2	6
6	159338	HOSE ASSEMBLY, OUTER TIRE	2	6
7	159337	HOSE ASSEMBLY, INNER TIRE	2	6
8	148416	REGULATOR ASSEMBLY W/ BALL VALVE	1	1
9	-----	WARNING LIGHT WIRE **(NOT SHOWN)**	1	1
10	-----	NYLON AIR TUBE **(NOT SHOWN)**	1	1
11	-----	CHAFE GUARD	1	1
12	-----	LARGE WIRE TIES **(NOT SHOWN)**	1	3
13	148417	TRIPLE AXLE HARDWARE KIT **(NOT SHOWN)**	--	1
13	148413	DUAL AXLE HARDWARE KIT **(NOT SHOWN)**	--	1
14	-----	AXLE VENT	1	1
15	145677	LIGHT PRESSURE GUARD **(NOT SHOWN)**	1	1
16	154653	PRESSURE SWITCH **(NOT SHOWN)**	1	1
17	085-002-02	RUBBER PLUG	2	6
18	194159	SPINDLE PLUG W/ ROTATING SHAFT KIT **(NOT SHOWN)** **(ITEMS 3 & 4)**	2	6

Eastern Wrecker Sales Inc

Eastern Wrecker Sales Inc

Index

Symbols

. 1-169

Numerics

0011037 1-63
0013007 . . . . . 1-179, 1-187
005-096-00 1-99
005-098-00 1-99
005-099-00 1-99
006-114-00 1-99
006-115-00 1-99
010-052-00 1-99
014-065-00 1-99
034-057-01 1-99
034-058-01 1-99
040-180-00 1-99
046-096-00 1-99
046-097-00 1-99
056-018-00 1-99
0600-250-01000 1-109
069-078-00 1-99
071-122-00 1-99
085-002-02 1-209
1/2X3/8BUSH 1-76
1/4-20WN 1-160
1/4-20X1-1/4 CB 1-160
1/4X3 1-38
10030 1-157
100696 1-196
1-007-010006 1-203
100855 1-8
101003 1-69
101299 . . . . . 1-8, 1-22
101386 1-41
101528 . . . . . 1-18, 1-57, 1-73, 1-89, 1-121
101847 . . . . . 1-92, 1-99
101849 1-92
101855 1-5
102-0323 1-160
102-0511 1-160
102-1089 1-109
102-1158 . . . . . 1-109, 1-189
102732 . . . . . 1-55, 1-71, 1-87, 1-93
103738 1-69
103805 1-99
103817 . . . . . 1-47, 1-62, 1-80
103861 1-92
104-0505 1-160
104370 . . . . . 1-18, 1-32
105-0105 1-160
105237 . . . . . 1-8, 1-22
105243 . . . . . 1-8, 1-22
105245 . . . . . 1-8, 1-22
105276 1-157
105282 1-5
105283 1-5
105297 1-196
105479 . . . . 1-18, 1-32, 1-150, 1-155, 1-196, 1-203
105480 . . . . 1-18, 1-32, 1-150, 1-155, 1-196, 1-203
105481 . . . . . 1-18, 1-32, 1-150, 1-196, 1-203
105482 . . . . . 1-18, 1-32, 1-150, 1-196, 1-203
105483 . . . . . 1-18, 1-32
105822 . . . . . 1-5, 1-196
105902 1-196
1-060-010004 1-160

Eastern Wrecker Sales Inc

106-0078 1-160
1-065-010011 1-109
106654 1-196
106655 1-196
106759 1-203
106760 1-203
106955 1-105
107498 1-203
107499 1-203
107500 1-203
107513 1-203
107887 . . . . . 1-8, 1-14, 1-22, 1-28
108196 . . . . . 1-109, 1-189
108295 1-150
108336 . . . . . 1-164, 1-165, 1-166, 1-167
108417 . . . . . 1-177, 1-195
108601 1-150
108801 . . . . . 1-14, 1-28, 1-51, 1-68, 1-85
108802 . . . . . 1-14, 1-28, 1-51, 1-68, 1-85
1-1/4ST ELL 1-203
110-0116 1-150
110-0253 1-150
110-4224 1-109
110-4337 1-160
110578 1-150
110615 . . . . . 1-95, 1-97
110616 1-97
110617 1-97
110618 . . . . . 1-97, 1-113
110621 1-95
110622 1-95
110975 1-101
110976 1-101
110996 . . . . . 1-153, 1-157
111008 . . . . . 1-95, 1-97
111021 . . . . 1-46, 1-55, 1-62, 1-71, 1-80, 1-87, 1-93
111025 1-97
111026 1-97
111027 1-95
111028 1-95
111029 1-95
111030 1-97
111031 1-97
111033 . . . . . 1-95, 1-97
111036 . . . . . 1-95, 1-97
111037 1-95
111038 1-95
111-1267 1-160
111382 . . . . . 1-105, 1-198
111390 1-198
111416 1-101
111417 1-101
111652 1-101
112172 . . . . . 1-155, 1-157
112174 1-157
112175 1-157
112184 1-155
112193 1-171
112248 1-157
112324 1-173
112529 1-101
112598 1-179
112599 1-179
112953 1-171
113109 1-101
113536 1-101
113856 1-150
114586 . . . . . 1-51, 1-68, 1-85, 1-92
114588 1-92
114712 1-133
114741 1-131
114814 1-150
114815 . . . . . 1-150, 1-157
114987 1-125

Eastern Wrecker Sales Inc

115717 1-99
115756 1-113
115877 1-150
116100 1-125
116326 1-150
116328 1-150
116330 1-150
117838 . . . . . 1-14, 1-28
117839 . . . . . 1-14, 1-28
117873 1-151
117997 . . . . . 1-47, 1-62, 1-80, 1-195
118005 1-157
118006 1-157
1-181-010046-7 1-150
118650 1-189
118-7429 1-157
119206 1-151
119445 1-151
119553 1-151
120659 1-151
120660 1-151
120661 . . . . . 1-109, 1-151
121031 1-127
121355 . . . . . 1-18, 1-32
12-16 070120 1-203
122381 1-109
122382 1-109
122709 1-109
123109 . . . . . 1-18, 1-32
123717 . . . . . 1-46, 1-62, 1-80
123812 1-41
123869 . . . . . 1-46, 1-62, 1-80
123873 1-41
12412408 1-204
1-242-010180-3 . . . . . 1-41, 1-42, 1-125, 1-127
12420301-017 . . . . . 1-5, 1-113, 1-135
12486400-520 . . . . . 1-95, 1-97
12486400-521 . . . . . 1-95, 1-97
12486400-526 . . . . . 1-95, 1-97
125130 . . . . . 1-155, 1-203
125871 1-18
125894 . . . . . 1-8, 1-22
1-271-010005-05 1-160
127806 1-41
127991 1-195
128434 1-97
128601 1-205
128774 1-151
128873 1-133
128874 . . . . . 1-113, 1-125, 1-165, 1-167
128886 . . . . . 1-169, 1-199, 1-201
129004 . . . . . 1-95, 1-97
129005 1-97
129006 . . . . . 1-95, 1-97
129146 1-125
129264 1-151
1-295-010001 . . . . . 1-150, 1-155, 1-160, 1-203
1-295-010002 1-203
129698 1-127
1-297-010004-04 . . . . . 1-14, 1-28
1-297-010007-05 . . . . 1-55, 1-71, 1-87, 1-171, 1-173
1-297-010007-06 . . . . . 1-14, 1-28, 1-76, 1-123
1-297-010007-12 1-117
1-297-010007-16 1-68
1-297-010008-05 1-14, 1-28, 1-55, 1-71, 1-87, 1-173
1-297-010008-07 1-14, 1-28, 1-59, 1-76, 1-91, 1-129, 1-173, 1-205
1-297-010008-09 . . . . . 1-59, 1-76, 1-91
1-297-010008-18 1-14, 1-28, 1-51, 1-68, 1-85, 1-119, 1-173
1-297-010008-20 1-14, 1-28, 1-51, 1-68, 1-85, 1-117, 1-129
1-297-010008-23 . . . . . 1-51, 1-68, 1-85, 1-129
1-297-010008-24 . . . . . 1-51, 1-68, 1-85, 1-129
1-297-010008-26 1-129
1-297-010009-03 . . . . . 1-14, 1-28
1-297-010009-04 . 1-51, 1-55, 1-68, 1-71, 1-85, 1-87

Eastern Wrecker Sales Inc

1-297-010010-01 *1-14, 1-28, 1-59, 1-76, 1-91, 1-123, 1-171*
1-297-010010-03 . . . . . *1-55, 1-71, 1-87*
1-297-010010-04 . . . . . *1-55, 1-71, 1-87, 1-205*
1-297-010011-02 . . . . . *1-173*
1-297-010011-04 . . . *1-55, 1-71, 1-87, 1-119, 1-173*
1-297-010013-11 . . . . . *1-55, 1-71, 1-87*
1-297-010013-12 . . . . . *1-55, 1-71, 1-87, 1-119*
1-297-010014-02 . . . . . *1-205*
1-297-010015-02 . . . . . *1-173*
1-297-010015-06 . . . . . *1-14, 1-28*
1-297-010015-07 . . . . . *1-51, 1-68, 1-85, 1-129*
1-297-010015-11 . . . . . *1-51, 1-68, 1-85*
1-297-010017-03 . . . . . *1-117*
1-297-010018-03 . . . . . *1-51, 1-68, 1-85*
1-297-010020-02 . . . . . *1-14, 1-28*
1-297-010022-02 . . . . . *1-14, 1-28, 1-205*
1-297-010022-03 *1-51, 1-55, 1-59, 1-68, 1-71, 1-76, 1-85, 1-87, 1-91, 1-119, 1-123*
1-297-010033-03 . . . . . *1-14, 1-28*
1-298-010001-1 . . . . . *1-8, 1-22*
129893 . . . . . *1-179, 1-187*
129894 . . . . . *1-179, 1-187*
129895 . . . . . *1-179*
130064 . . . . . *1-190*
130068 . . . . . *1-190*
130116 . . . . . *1-11, 1-25, 1-180, 1-183, 1-185*
130157 . . . . . *1-163*
130642 . . . . . *1-189*
131195 . . . . . *1-169, 1-199, 1-201*
1-316-010013 . . . . . *1-150*
1-323-010008 . . . . . *1-205*
133458 . . . . . *1-125*
134144 . . . . . *1-95*
1-343-010001 . . . . . *1-157, 1-185*
134757 . . . . . *1-101*
135181 . . . . . *1-63*
135188 . . . . . *1-109*
136870 . . . . . *1-105*
136871 . . . . . *1-105*
136908 . . . . . *1-201*
137107 . . . . . *1-191*
137108 . . . . . *1-101*
137461 . . . . . *1-99*
137485 . . . . . *1-99*
137559 . . . . . *1-177*
138090 . . . . . *1-99*
138155 . . . . . *1-121*
138209 . . . . . *1-151*
1-384-010038024 . . . . . *1-51, 1-68, 1-85*
1-384-010038030 . . . . . *1-51, 1-68, 1-119, 1-123*
1-384-010038054 . . . . . *1-51, 1-68, 1-85*
1-384-010038056 . . . . . *1-117*
1-384-010038060 . . . . . *1-14, 1-28, 1-51, 1-68, 1-85*
1-384-010038072 . . . . . *1-51, 1-68, 1-85, 1-117*
1-384-010038084 . . . . . *1-51, 1-68, 1-85*
1-384-010038090 . . . . . *1-51, 1-68*
1-384-010038-2 . . . . . *1-51, 1-68, 1-85*
138814 . . . . . *1-14, 1-28*
138956 . . . . . *1-68, 1-99*
138962 . . . . . *1-52, 1-59, 1-76, 1-85, 1-91, 1-113*
139132 . . . . . *1-187*
139133 . . . . . *1-187*
139140 . . . . . *1-160*
139383 . . . . . *1-99*
139529 . . . . . *1-209*
139600 . . . . . *1-101*
139619 . . . . . *1-109*
139630 . . . . . *1-109*
139631 . . . . . *1-109*
1-397-010301018 . . . . . *1-32*
1-397-010301024 . . . . . *1-155*
1-397-010301054 . . . . . *1-32*
1-397-010301100 . . . . . *1-203*
1-397-010301136 . . . . . *1-18, 1-32*

Eastern Wrecker Sales Inc

1-397-010302042 1-157
1-397-010302060 . . . . . 1-18, 1-155, 1-160
1-397-010302064 . . . . . 1-127, 1-129
1-397-010304016 1-160
1-397-010304018 1-150
1-397-010304060 . . . . . 1-150, 1-163
1-397-010305060 . . . . . 1-155, 1-160
1-397-010312032 1-150
1-397-010318018 1-160
139826 1-109
139830 1-109
140369 . . . . . 1-171, 1-173
140450 1-175
1406044 1-163
140927 1-109
140939 1-171
141251 1-133
142064 . . . . . 1-105, 1-201
142065 1-201
1422765 1-109
142441 . . . . . 1-18, 1-121
142442 1-32
142465 1-18
142545 . . . . . 1-18, 1-32, 1-57, 1-73, 1-89, 1-121
142553 . . . . . 1-57, 1-73, 1-89, 1-121
142891 . . . . . 1-59, 1-76, 1-91
143100 . . . . . 1-11, 1-25
143101 . . . . . 1-11, 1-25
143102 . . . . . 1-49, 1-65, 1-83, 1-179, 1-187
143103 . . . . . 1-49, 1-65, 1-83, 1-109, 1-177, 1-195
143104 . . . . . 1-180, 1-183, 1-195
143113 1-195
143114 1-49, 1-65, 1-83, 1-115, 1-177, 1-185, 1-195
143115 1-195
143116 1-195
143117 1-195
143118 1-195
143121 . . . . . 1-11, 1-25, 1-185, 1-195
143123 . . . . . 1-49, 1-65, 1-83, 1-115
143166 . . . . . 1-191, 1-195
143669 1-169
143670 . . . . . 1-165, 1-167
143671 . . . . . 1-165, 1-167
143850 1-151
144608 . . . . . 1-180, 1-183, 1-185
144609 . . . . . 1-49, 1-65, 1-83
144736 1-160
144979 1-99
145499 . . . . . 1-47, 1-62, 1-80, 1-103, 1-105
145677 1-209
146897 . . . . . 1-11, 1-25, 1-49, 1-65, 1-83
146898 . . . . . 1-49, 1-65, 1-83, 1-115
146924 1-32
146929 . . . . . 1-49, 1-65, 1-83, 1-185
146931 1-179
146932 1-187
147072 1-105
147312 1-169
147372 1-42
147377 1-42
147464 1-92
147582 1-127
147883 1-125
148028 1-125
148036 1-127
148043 1-127
148044 1-127
148045 1-127
148338 1-163
148413 1-209
148416 1-209
148417 1-209
148581 1-109
148582 1-109
148811 1-125
150057 1-125

Eastern Wrecker Sales Inc

150058 1-125
150059 1-125
150072 . . . . . 1-177, 1-195
150074 . . . . . 1-177, 1-195
150076 . . . . . 1-8, 1-22
150083 1-127
150111 1-109
150114 . . . . . 1-180, 1-183
150116 1-49, 1-65, 1-83, 1-115, 1-179, 1-180, 1-183, 1-187, 1-193
150117 . . . . . 1-11, 1-25, 1-180, 1-183, 1-185
150118 . . . . . 1-180, 1-193
150329 1-177
1-510-010001 . . . 1-14, 1-18, 1-28, 1-32, 1-46, 1-62, 1-80, 1-109, 1-169, 1-199, 1-201
1-510-010003-09 . . . 1-46, 1-62, 1-80, 1-113, 1-125
1-512-010002-14 1-109
1-512-010003-06 . . . . . 1-63, 1-173
1-512-010003-14 1-109
1-512-010004-03 . . . . . 1-150, 1-157
1-512-010005-01 . 1-8, 1-22, 1-41, 1-46, 1-49, 1-62, 1-65, 1-76, 1-80, 1-83, 1-93, 1-105, 1-109, 1-115, 1-160, 1-169, 1-179, 1-187, 1-193
1-512-010005-03 1-11, 1-25, 1-49, 1-65, 1-83, 1-103, 1-127, 1-137, 1-153, 1-157, 1-160, 1-171, 1-191
1-512-010005-05 . 1-8, 1-14, 1-18, 1-22, 1-28, 1-32, 1-46, 1-62, 1-80, 1-103, 1-109, 1-113, 1-127, 1-135, 1-140, 1-141, 1-150, 1-157, 1-160, 1-164, 1-165, 1-166, 1-167, 1-169, 1-187, 1-189, 1-197, 1-203, 1-204, 1-205
1-512-010005-09 . . . 1-46, 1-62, 1-80, 1-105, 1-109, 1-131, 1-138, 1-139, 1-150, 1-160, 1-165, 1-167, 1-169, 1-185, 1-189, 1-198, 1-201, 1-203
1-512-010005-15 . . . 1-8, 1-22, 1-109, 1-137, 1-163, 1-207
1-512-010005-19 . . . . . 1-153, 1-155, 1-157
1-512-010007-03 . . . 1-49, 1-65, 1-83, 1-113, 1-115
1-512-010007-05 . . . 1-59, 1-76, 1-91, 1-109, 1-160
1-512-010007-06 . . . . . 1-103, 1-160
1-512-010007-12 . . . . . 1-8, 1-22, 1-143, 1-144
153032 . . . . . 1-109, 1-160
1-533-010001 1-131
153841 1-109
154653 1-209
155107 1-181
155628 1-179
1-557-010014 1-131
1-557-010362-49 1-142
1-557-010362-51 1-189
1-557-010362-63 . . . . . 1-41, 1-125
1-557-010362-65 1-103
155780 . . . . . 1-5, 1-113, 1-135
1-560-010002-02 . . . . . 1-14, 1-28, 1-129
1-560-010002-03 . . . . . 1-51, 1-68, 1-85, 1-150
1-560-010002-04 . 1-51, 1-59, 1-68, 1-76, 1-85, 1-91, 1-117, 1-129, 1-203
1-560-010002-05 . . . . 1-51, 1-68, 1-85, 1-160, 1-203
1-560-010002-07 1-203
156069 1-181
156430 . . . . . 1-8, 1-22
156502 1-193
157700 . . . . . 1-123, 1-209
157703 . . . . . 1-59, 1-76, 1-91, 1-209
157704 1-209
157705 1-209
157706 1-209
157707 1-209
158538 1-99
158581 . . . . . 1-18, 1-32
158732 . . . . . 1-103, 1-105
159337 1-209
159338 1-209
160070 1-196
160366 . . . . . 1-8, 1-18, 1-34
160367 1-199
160396 . . . . . 1-8, 1-207
161165 . . . . . 1-8, 1-22
161168 . . . . . 1-8, 1-22
161172 1-8

Eastern Wrecker Sales Inc

161797 1-121
161825 1-175
161830 1-175
161833 1-175
162037 1-8
162038 1-8
162039 1-8
162045 1-138
162046 . . . . . 1-138, 1-139
162049 1-207
162051 1-207
162056 1-8
162066 1-199
162070 1-5
162483 . . . . . 1-140, 1-163
162484 . . . . . 1-140, 1-141
162485 1-140
162787 1-138
162788 . . . . . 1-8, 1-22
163045 1-42
163065 1-131
163092 . . . . . 1-46, 1-62, 1-80
163100 1-138
163101 1-131
163102 1-131
163342 1-185
163352 . . . . . 1-18, 1-32
163516 1-138
163517 1-131
163578 . . . . . 1-51, 1-68, 1-85
163589 1-142
163996 1-185
164052 . . . . . 1-76, 1-185
164087 1-175
164088 1-175
164090 1-175
164091 1-175
164092 . . . . . 1-171, 1-175
164093 1-175
164108 1-139
164109 1-139
164110 1-139
164435 . . . . . 1-125, 1-127
164590 1-113
1-647-010004117 1-189
1-647-010004217 1-189
1-647-010004221 . . . . . 1-8, 1-22, 1-103
1-647-010004259 1-135
164827 1-169
164828 1-143
164829 1-143
164830 1-143
164831 1-143
164838 1-143
164897 1-5
165151 1-144
165152 1-144
165156 1-144
165160 1-144
165161 1-144
165163 1-142
1-654-010034-06 1-137
1-654-010047-03 . . . . . 1-8, 1-22
1-654-010047-04 . . . . 1-46, 1-62, 1-80, 1-93, 1-169, 1-177, 1-195
1-654-010047-05 . . . . . 1-8, 1-22, 1-109
1-654-010047-06 . 1-41, 1-49, 1-59, 1-65, 1-76, 1-83, 1-91, 1-105, 1-115, 1-150, 1-179, 1-187, 1-193
1-654-010047-10 1-109
1-654-010049-03 . . . . . 1-18, 1-32, 1-101
1-654-010049-05 . . . . . 1-11, 1-25, 1-171, 1-191
1-654-010049-06 . . . . . 1-11, 1-25, 1-49, 1-65, 1-83
1-654-010049-09 1-127
1-654-010050-07 1-160
1-654-010051-03 . . . . . 1-109, 1-189, 1-205

Eastern Wrecker Sales Inc

1-654-010051-05 . *1-8, 1-14, 1-22, 1-28, 1-46, 1-62, 1-80, 1-95, 1-97, 1-157, 1-160, 1-164, 1-165, 1-166, 1-167*

1-654-010051-06 *1-22, 1-32, 1-46, 1-62, 1-80, 1-109, 1-150, 1-160, 1-169, 1-199, 1-201, 1-203, 1-204*

1-654-010051-07 . . . *1-46, 1-62, 1-80, 1-113, 1-135, 1-179, 1-187, 1-199*

1-654-010051-08 *1-8, 1-28, 1-46, 1-62, 1-80, 1-113, 1-169, 1-189, 1-201*

1-654-010051-09 . . . . . *1-103, 1-140, 1-141, 1-150*

1-654-010051-11 . . . . . *1-197*

1-654-010051-12 . . . . . *1-46, 1-62, 1-80, 1-197*

1-654-010055-01 . . . . . *1-138, 1-139, 1-160*

1-654-010055-02 . . . . . *1-125*

1-654-010055-03 *1-150, 1-160, 1-165, 1-167, 1-169, 1-201, 1-203*

1-654-010055-04 . . . *1-46, 1-62, 1-80, 1-105, 1-131, 1-138, 1-139, 1-198, 1-203*

1-654-010055-05 . . . . . *1-131, 1-189*

1-654-010055-10 . . . . . *1-113*

1-654-010055-13 . . . . . *1-150*

1-654-010059-07 . . . . . *1-109*

1-654-010059-11 . . . . . *1-109*

1-654-010061-04 . . . . . *1-143, 1-144*

1-654-010061-05 . . . . . *1-137*

1-654-010061-09 . . . . . *1-163*

1-654-010061-16 . . . . . *1-137*

1-654-010061-20 . . . . . *1-22*

1-654-010065-17 . . . . . *1-153, 1-155, 1-157*

1-654-010070-02 . . . . . *1-109*

1-654-010100015 . . . . . *1-160*

1-654-010121-06 . . . . . *1-153, 1-157*

1-654-010147-06 . . . . . *1-63*

1-656-010003051 . . . *1-49, 1-65, 1-83, 1-113, 1-115, 1-157, 1-173*

1-656-010003053 . . . . . *1-63*

166766 . . . . . *1-151*

166872 . . . . . *1-177*

166916 . . . . . *1-109*

166924 . . . . . *1-192*

167-0022 . . . . . *1-131*

167199 . . . . . *1-34*

167200 . . . . . *1-34*

167201 . . . . . *1-34*

167391 . . . . . *1-95*

167392 . . . . . *1-95*

167965 . . . . . *1-179, 1-187, 1-193*

168519 . . . . . *1-22*

168610 . . . . . *1-76*

168712 . . . . . *1-185*

168713 . . . . . *1-185*

168941 . . . . . *1-131*

168961 . . . . . *1-139*

168962 . . . . . *1-139*

168963 . . . . . *1-131*

168972 . . . . . *1-142*

168973 . . . . . *1-55, 1-71, 1-87*

169365 . . . . . *1-18, 1-32*

169372 . . . . . *1-9, 1-23*

169410 . . . . . *1-49, 1-65, 1-83*

169531 . . . . . *1-151*

169532 . . . . . *1-151*

169644 . . . . . *1-138*

169645 . . . . . *1-138*

169830 . . . . . *1-181*

169853 . . . . . *1-11, 1-25, 1-185*

170109 . . . . . *1-151*

170110 . . . . . *1-151*

170111 . . . . . *1-151*

170112 . . . . . *1-151*

170115 . . . . . *1-97*

170411 . . . . . *1-204*

170412 . . . . . *1-204*

170421 . . . . . *1-22, 1-32, 1-35*

1709AS669-01 . . . . . *1-109*

171441 . . . . . *1-157*

171664 . . . . . *1-46, 1-51, 1-62, 1-68, 1-80, 1-85*

Eastern Wrecker Sales Inc

171678 1-41
171679 . . . . . 1-103, 1-105
171685 1-105
171976 1-164
171977 1-165
171981 1-166
171982 1-167
171983 . . . . . 1-166, 1-167
171984 . . . . . 1-164, 1-165, 1-166, 1-167
172030 1-38
172098 1-99
172354 1-22
172362 1-22
172365 1-22
172366 1-22
172374 1-22
172378 1-38
172389 1-22
172425 1-133
172426 1-135
172427 1-135
172428 1-135
172429 . . . . . 1-38, 1-41
172434 1-135
172435 1-133
172436 . . . . . 1-133, 1-135
172905 1-63
173044 1-110
173605 1-163
173607 1-163
173608 1-163
173637 1-189
173650 1-189
173652 1-189
173653 1-189
173654 1-189
173662 1-137
173664 1-137
173666 1-137
173669 1-137
173670 1-137
173672 1-137
173860 1-151
174019 . . . . . 1-164, 1-165
174020 . . . . . 1-164, 1-165
174021 1-164
174022 . . . . . 1-164, 1-165, 1-166
174023 . . . . . 1-166, 1-167
174024 1-166
174027 . . . . . 1-165, 1-167
174042 1-5
174071 1-183
174152 1-35
174153 1-35
174154 1-35
174178 . . . . . 1-46, 1-62, 1-80
174248 1-41
174249 1-41
174250 1-41
174611 1-189
174612 . . . . . 1-189, 1-190
174616 1-189
174618 1-189
174628 1-189
174632 1-189
174633 1-189
174634 1-189
174635 1-189
174636 1-189
174638 1-189
174639 1-189
174640 1-189
174642 1-189
174645 1-137
174647 1-191
174648 1-189

Eastern Wrecker Sales Inc

174650 1-191
174664 1-141
174665 1-141
175355 1-195
175357 1-192
175361 1-192
175362 1-192
175363 1-192
175365 1-192
175366 1-192
175572 1-190
175950 1-197
175951 1-197
175952 1-197
175953 1-197
175955 1-197
176076 1-76
176335 1-113
176474 . . . . . 1-59, 1-76, 1-91
177902 1-180
178428 1-151
178434 1-153
178435 1-153
178436 1-153
178444 . . . . . 1-8, 1-22
178638 1-151
179090 1-151
179324 1-103
1-796-010001 . . . . . 1-47, 1-62, 1-80
179902 1-49, 1-65, 1-83, 1-115, 1-177, 1-183, 1-185
179933 1-101
180570 . . . . . 1-49, 1-65, 1-83, 1-115, 1-177, 1-185
180757 1-68
180768 1-68
180931 1-5
182009 1-131
182128 1-105
182153 1-105
182156 1-105
182159 1-105
182167 1-105
182176 1-32
1-822-010002 1-160
1-833-010001 . . . 1-14, 1-28, 1-55, 1-59, 1-71, 1-76, 1-87, 1-91, 1-123, 1-173
1-833-010002 . . . 1-14, 1-28, 1-51, 1-55, 1-68, 1-71, 1-85, 1-87, 1-117, 1-119, 1-205
1-833-010003 . . . . . 1-51, 1-68, 1-85
183649 . . . . . 1-103, 1-105
184350 1-103
184355 1-103
184381 1-103
184382 1-103
184383 1-105
184384 1-105
184391 1-131
184397 1-105
184402 1-105
185059 . . . . . 1-11, 1-25
1-861-010032-01 1-197
1-861-010032-03 . . . . . 1-157, 1-160
1-861-010032-06 . . . . . 1-105, 1-109
1-861-010032-07 . . 1-8, 1-22, 1-41, 1-49, 1-59, 1-65, 1-76, 1-83, 1-91, 1-115, 1-160, 1-169, 1-193
1-861-010032-08 . . . . . 1-18, 1-32
1-861-010032-09 1-11, 1-25, 1-49, 1-65, 1-83, 1-137, 1-157, 1-160, 1-171, 1-191
1-861-010032-10 1-18, 1-32, 1-46, 1-62, 1-80, 1-109, 1-157
1-861-010032-11 . . 1-8, 1-14, 1-22, 1-28, 1-32, 1-46, 1-62, 1-80, 1-113, 1-135, 1-140, 1-141, 1-150, 1-160, 1-164, 1-165, 1-166, 1-167, 1-169, 1-179, 1-187, 1-189, 1-199, 1-201, 1-204
1-861-010032-14 1-109
1-861-010032-15 . . . 1-46, 1-62, 1-80, 1-113, 1-131, 1-138, 1-139, 1-150, 1-160, 1-165, 1-167, 1-169, 1-185, 1-189, 1-201
1-861-010032-16 1-189

Eastern Wrecker Sales Inc

1-861-010032-18 1-109
1-861-010032-19 1-109
1-861-010032-21 . . . . . 1-8, 1-22, 1-163
1-861-010032-25 . . . . . 1-41, 1-125
1-861-010034-07 . . . 1-49, 1-65, 1-83, 1-113, 1-115, 1-160
1-861-010034-09 . . . . . 1-59, 1-76, 1-91, 1-150
1-861-010034-10 . . . . . 1-18, 1-32, 1-101
1-861-010034-11 . . . . . 1-8, 1-22, 1-109, 1-189
1-861-010034-13 . . . . . 1-150, 1-203
1-861-010034-15 1-109
1-861-010034-17 . . . . . 1-143, 1-144
1-861-010059-21 . . . . . 1-18, 1-32
186300 1-131
186329 1-131
186811 1-151
186875 . . . . . 1-18, 1-32, 1-127
186877 . . . . . 1-18, 1-32, 1-127
186885 . . . . . 1-18, 1-32, 1-36, 1-127
187440 1-103
187856 . . . . . 1-49, 1-65, 1-83
187857 . . . . . 1-49, 1-65
187859 . . . . . 1-49, 1-65, 1-83, 1-115, 1-177, 1-185
187860 . . . . . 1-49, 1-65, 1-83, 1-115, 1-177
187863 . . . . . 1-11, 1-25, 1-49, 1-65, 1-83
187864 . . . . . 1-49, 1-65, 1-83, 1-115, 1-177
187868 . . . . . 1-49, 1-65, 1-83
187869 . . . . . 1-180, 1-183
189278 . . . . . 1-8, 1-22
189279 . . . . . 1-8, 1-22
189280 . . . . . 1-8, 1-22
189282 . . . . . 1-8, 1-22
189292 1-5
189308 1-151
189309 1-151
189310 1-151
189311 1-151
189360 1-150
189360FI 1-150
189364 1-151
189369 1-151
191568 . . . . . 1-49, 1-65, 1-83
191588 1-95
191589 1-95
191847 1-36
191848 1-36
191849 1-36
191850 1-36
192208 1-5
193400 1-36
193401 1-36
193402 1-36
193442 1-36
193443 1-36
193444 1-36
193445 1-36
193446 1-36
193447 1-36
193904 1-151
193910 . . . . . 1-18, 1-32, 1-127
194148 . . . . . 1-169, 1-201
194149 . . . . . 1-169, 1-201
194152 1-169
194153 1-169
194159 1-209
194407 . . . . . 1-18, 1-32
194415 . . . . . 1-46, 1-62, 1-80
194417 . . . . . 1-46, 1-62, 1-80
194418 . . . . . 1-46, 1-62, 1-80
194419 . . . . . 1-46, 1-62, 1-80
194424 . . . . . 1-46, 1-62, 1-80
194425 . . . . . 1-46, 1-55, 1-62, 1-71, 1-80, 1-87
194426 . . . . . 1-46, 1-62, 1-80
194427 . . . . . 1-46, 1-62, 1-80
194849 . . . . . 1-63, 1-71
196167 1-5

Eastern Wrecker Sales Inc

196173 1-5
196174 1-5
196177 1-5
197605 1-22
197610 . . . . . 1-18, 1-32, 1-127
197615 . . . . . 1-18, 1-32
197617 . . . . . 1-18, 1-32
197661 . . . . . 1-8, 1-11, 1-18
197668 . . . . . 1-18, 1-32
197669 1-8
197670 . . . . . 1-8, 1-11, 1-14, 1-18
197671 . . . . . 1-8, 1-11, 1-14
198153 1-5
198484 . . . . . 1-46, 1-49, 1-51, 1-55, 1-57, 1-59
198485 . . . . . 1-46, 1-49, 1-51, 1-55, 1-57, 1-59
198486 . . . . . 1-46, 1-49, 1-51, 1-55, 1-57, 1-59
198487 . . . . . 1-46, 1-49, 1-51, 1-55, 1-57, 1-59
198488 . . . . . 1-46, 1-49, 1-51, 1-55, 1-57, 1-59
198489 . . . . . 1-46, 1-49, 1-51, 1-55, 1-57, 1-59
198490 . . . . . 1-46, 1-49, 1-51, 1-55, 1-57, 1-59
198491 . . . . . 1-46, 1-49, 1-51, 1-55, 1-57, 1-59
198492 . . . . . 1-62, 1-65, 1-68, 1-71, 1-73, 1-76
198493 . . . . . 1-62, 1-65, 1-68, 1-71, 1-73, 1-76
198494 . . . . . 1-62, 1-65, 1-68, 1-71, 1-73, 1-76
198495 . . . . . 1-80, 1-83, 1-85, 1-87, 1-89, 1-91
198496 . . . . . 1-80, 1-83, 1-85, 1-87, 1-89, 1-91
198497 . . . . . 1-80, 1-83, 1-85, 1-87, 1-89, 1-91
198509 . . . . . 1-46, 1-49, 1-51, 1-55, 1-57, 1-59
198510 . . . . . 1-46, 1-49, 1-51, 1-55, 1-57, 1-59
198511 . . . . . 1-46, 1-49, 1-51, 1-55, 1-57, 1-59
198512 . . . . . 1-46, 1-49, 1-51, 1-55, 1-57, 1-59
198513 . . . . . 1-46, 1-49, 1-51, 1-55, 1-57, 1-59
198514 . . . . . 1-46, 1-49, 1-51, 1-55, 1-57, 1-59
198515 . . . . . 1-62, 1-65, 1-68, 1-71, 1-73, 1-76
198516 . . . . . 1-62, 1-65, 1-68, 1-71, 1-73, 1-76
198517 . . . . . 1-80, 1-83, 1-85, 1-87, 1-89, 1-91
198519 . . . . . 1-62, 1-65, 1-68, 1-71, 1-73, 1-76
198520 . . . . . 1-62, 1-65, 1-68, 1-71, 1-73, 1-76
198709 . . . . . 1-113, 1-115, 1-117, 1-119, 1-121
198710 . . . 1-113, 1-115, 1-117, 1-119, 1-121, 1-123
198711 . . . . . 1-113, 1-115, 1-117, 1-119, 1-121
198712 . . . 1-113, 1-115, 1-117, 1-119, 1-121, 1-123
198716 . . . 1-113, 1-115, 1-117, 1-119, 1-121, 1-123
198717 . . . . . 1-113, 1-115, 1-117, 1-119, 1-121
198721 . . . . . 1-113, 1-115, 1-117, 1-119, 1-121
198722 . . . 1-113, 1-115, 1-117, 1-119, 1-121, 1-123
198733 1-125
199038 1-105
199105 1-151
199129 1-183
199131 1-180
199131FI 1-180
199135 1-5
199177 1-5
199717 1-185
199717FI 1-185
199719 1-5
199720 1-5
199721 1-5
199935 . . . . . 1-22, 1-25, 1-28
199936 1-22
199942 . . . . . 1-8, 1-22
199980 . . . . . 1-22, 1-25, 1-28, 1-32
199981 . . . . . 1-22, 1-32
199995 . . . . . 1-125, 1-127, 1-129
199996 1-125
1DM8ER 1-18, 1-32, 1-127
200015 . . . . . 1-125, 1-127
200036 . . . . . 1-11, 1-25
200037 . . . . . 1-49, 1-65, 1-83
202094 . . . . . 1-57, 1-73, 1-89, 1-121
202099 . . . . . 1-57, 1-73, 1-89, 1-121
202102 . . . . . 1-57, 1-73, 1-89
202103 1-121

Eastern Wrecker Sales Inc

202111 . . . . . 1-57, 1-73, 1-89
202112 . . . . . 1-57, 1-73, 1-89
2021-12-8S 1-110, 1-155
202118 . . . . . 1-57, 1-73, 1-89
202119 . . . . . 1-57, 1-73, 1-89
202122 . . . . . 1-57, 1-73
2024-12-12S 1-150, 1-155, 1-160, 1-203
2024-12-8S 1-155, 1-203
2024-2-4S 1-18, 1-32, 1-121
202578 1-5
202702-10-8S 1-18, 1-32, 1-127
202702-12-12S 1-18, 1-32, 1-155
202702-12-8S 1-110, 1-155
202702-6-6S 1-189
202702-8-6S 1-110
202702-8-8S 1-41, 1-127
203102-12-12S 1-151
204124 . . . . . 1-18, 1-32
204189 1-36
204358 1-110
204363 1-110
2045-6-6S 1-69
2046-6-6S 1-117, 1-119, 1-123
204675 1-192
2047-12-12S 1-203
205924 1-110
2062-10-12S 1-160
2062-10-8S 1-18, 1-32, 1-127, 1-160
2062-12-12S 1-18, 1-32, 1-150
2062-12-8S 1-110
2062-16-8S 1-32, 1-203
2062-6-6S 1-110
2062-8-6S 1-110
2062-8-8S 1-41, 1-127
206900 1-110
206904 1-110
206906 1-110
206907 1-110
206909 1-110
206910 1-110
206911 1-110
206912 1-110
206913 1-110
206917 1-110
206919 1-110
2071-8-8S 1-18, 1-32, 1-127, 1-160
208081 1-110
208082 1-110
208083 1-110
2081-8-6S 1-51, 1-68, 1-85, 1-117
2083-12-8S 1-51, 1-68, 1-85
2083-8-4S . 1-55, 1-59, 1-71, 1-76, 1-87, 1-91, 1-129
2083-8-8S 1-51, 1-68, 1-85
208390 1-36
208391 1-36
208392 1-36
208406 1-110
208407 1-110
208413 1-110
208414 1-110
208712 1-5
2088-6-6S 1-51, 1-68, 1-85
208883 1-110
2089-6-6S 1-51, 1-68, 1-85, 1-117
2089-8-8S 1-51, 1-68, 1-85
2092-6-6S 1-51, 1-68, 1-85
209914 1-110
210034 1-110
210050 1-110
210059 1-110
210060 1-109
210061 1-110
210062 1-110
210084 1-110
210377 1-151
210459 1-110

Eastern Wrecker Sales Inc

212454 1-110
213179 1-110
213264 1-110
213265 1-110
213269 1-110
213273 1-110
213274 1-110
213275 1-110
213295 1-49, 1-65, 1-83, 1-115, 1-177, 1-183, 1-185
213296 . . . . . 1-49, 1-65, 1-83, 1-115, 1-177, 1-185
2-181-010001 . . . . . 1-14, 1-18, 1-28, 1-32, 1-110
220303 1-8
220304 1-8
2216-12-12S 1-196
2240-12-12S 1-150
231-4310 1-157
237-2308-012 1-185
239-4899 1-157
239-8113-18 1-189
239-8113-36 1-111
239-8115-12 1-189
239-9076-006 1-113
2481X 1-151
2-557-010054 1-41
2-573-010037 1-125
2-573-010335 1-5
2-720-010006 . . . . . 1-8, 1-22
2-720-010007 . . . . . 1-8, 1-22
3/4NIPPLE 1-155
3/8P COUPL 1-150
3-007-010042 1-160
3-014-010023 1-160
3-054-010066 1-160
3067 1-101
3-120-010124 . . . . . 1-150, 1-189
3-120-010445 . . . . . 1-14, 1-28, 1-205
3-120-010461 1-203
3-120-010463 1-157
3-120-010498 1-204
3-128-010032 1-181
3-153-010024040 1-157
3-156-010042 1-161
3-162-010001 . . . . . 1-150, 1-161, 1-203
3-182-010028 1-150
3-182-010034 1-157
3-201-010002 . . . . . 1-47, 1-62, 1-80, 1-113, 1-161
3-220-010004 . . . 1-51, 1-55, 1-59, 1-68, 1-71, 1-76, 1-85, 1-87, 1-91
3-220-010005 . . . . . 1-117, 1-119, 1-123
3-220-010010 1-161
3-238-010007 . . . . . 1-8, 1-14, 1-22, 1-28
3-272-010010 . . . . . 1-179, 1-187, 1-193
3-272-010021 . . . . . 1-161, 1-179, 1-187
3-272-010157 1-181
3-273-010014 1-161
3-311-015001 1-131
3-316-010008 . . . . . 1-150, 1-161
3-360-010008 1-41
3-368-010068 1-161
3-368-010252 . . . . . 1-161, 1-177, 1-193, 1-195
3-380-010006 1-161
3-395-010001 . . . . . 1-113, 1-192
3-399-010001 1-203
3-410-010912 1-160
3-443-010018 1-150
3-482-010051 1-161
3-482-010137 1-161
3-482-010503 1-203
3-485-010001 . . . . . 1-46, 1-62, 1-80, 1-113, 1-135
3-557-010273 1-38
3-561-010001 1-203
3-565-010172 1-161
3-565-010173 1-161
3-573-010210 1-5
3-573-010298 1-5

Eastern Wrecker Sales Inc

3-573-010377 . . . . . *1-5*, *1-113*
3-573-010496 . . . . . *1-38*, *1-113*
3-591-010001 . . . . . *1-203*
3-591-010010 . . . . . *1-161*
3-654-010129-2 . . . . . *1-47*, *1-62*, *1-80*
3-659-010012 . . . . . *1-101*
3-681-010056 . . . . . *1-161*
3-681-010057 . . . . . *1-161*
3-681-010069 . . . . . *1-161*
3-707-010001 . . . . . *1-103*
3-720-010075 . . . . . *1-8*, *1-22*
3-720-010084 . . . . . *1-103*
3-762-010017 *1-46*, *1-62*, *1-80*, *1-113*, *1-135*, *1-169*, *1-199*, *1-201*
3-765-010015 . . . . . *1-161*
3-780-010002 . . . *1-46*, *1-52*, *1-62*, *1-68*, *1-80*, *1-85*, *1-113*, *1-117*, *1-125*, *1-129*
3-786-010033 . . . . . *1-155*
3-786-010037 . . . . . *1-161*
3-786-010043 . . . . . *1-203*
3-793-010040 . . . . . *1-198*
3-846-010041 . . . . . *1-161*
3-846-010155 . . . . . *1-155*
3-850-010002 . . . . . *1-161*
3-870-010106 . . . . . *1-101*
3-870-010107 . . . . . *1-101*
3-870-010110 . . . . . *1-101*
3-870-010116 . . . . . *1-101*
3P257 . . . . . *1-111*
40-0667-02 . . . . . *1-150*
4009 . . . . . *1-101*
43029 . . . . . *1-49*, *1-65*, *1-83*, *1-185*
5/16-18X1-1/2EB *1-103*
5/16-18X2 HHCS *1-161*
50013-114 . . . . . *1-111*
50013-33 . . . . . *1-111*
51134-08 . . . . . *1-111*
514-9045-12 . . . . . *1-111*
514-9045-26 . . . . . *1-150*
514-9045-30 . . . . . *1-189*
514-9073-18 . . . . . *1-150*
516-22PTL . . *1-9*, *1-23*, *1-105*, *1-133*, *1-135*, *1-197*
5210 . . . . . *1-9*, *1-23*
55B61 . . . . . *1-14*, *1-28*, *1-129*
55B61-6 . . . . . *1-14*, *1-28*
55B61-7 . . . . . *1-14*, *1-28*
56D4 . . . . . *1-52*, *1-68*, *1-85*, *1-117*, *1-129*
620-0887 . . . . . *1-18*, *1-33*
622-3511-008 . . . . . *1-9*, *1-23*
6828 . . . . . *1-203*
758-181 . . . . . *1-52*, *1-68*, *1-85*, *1-125*, *1-129*
805-2 . . . . . *1-46*, *1-62*, *1-80*, *1-113*
81264 . . . . . *1-11*, *1-25*, *1-180*, *1-183*
900 23 002 . . . . . *1-97*
900-36-177 . . . . . *1-97*
900-44-162 . . . . . *1-95*, *1-97*
900 54 007 . *1-46*, *1-55*, *1-62*, *1-71*, *1-80*, *1-87*, *1-93*
900-54-079 . . . . . *1-173*
900-54-088 . . . . . *1-55*, *1-71*, *1-87*, *1-173*
900598-12S *1-111*, *1-151*
905-54-107 *1-14*, *1-28*, *1-55*, *1-59*, *1-71*, *1-76*, *1-87*, *1-91*, *1-93*, *1-129*
934 00 149 . . . . . *1-95*, *1-97*
934 00 492 . . . . . *1-97*
934-00-492 . . . . . *1-95*
934 00 498 . . . . . *1-95*, *1-97*
936 00 077 . . . . . *1-95*, *1-97*
936 00 162 . . . . . *1-95*, *1-97*
95 . . . . . *1-41*
9-630-010009 . . . . . *1-23*

C

C3069X12 . . . . . *1-203*
CA-1595 . . . . . *1-155*, *1-160*

Eastern Wrecker Sales Inc

H

HM212011 . . . . . *1-101*
HM212049 . . . . . *1-101*
HM218210 . . . . . *1-101*
HM218248 . . . . . *1-101*

K

K71-136-00 . . . . . *1-99*

P

PTO *1-203*

R

RWD39000 . . . . . *1-80*, *1-103*, *1-105*
RWD39021 . . . . . *1-103*, *1-105*
RWD39062 . . . . . *1-47*, *1-62*, *1-80*

S

STP-164 . . . . . *1-160*

T

TR545D *1-101*
TR573 . . . . . *1-101*

W

W214S-1 . . . . . *1-179*, *1-187*
W908406-4 . . . . . *1-111*
W908409-4 . . . . . *1-137*, *1-207*

Eastern Wrecker Sales Inc

Document Control Revision Log:

Date	Form #	Improvement(s): Description and Comments
2/2020	F-917	Updated parts from ECN 45688

Eastern Wrecker Sales Inc

Equipment from Landoll Corporation is built to exacting standards ensured by ISO 9001 registration at all Landoll manufacturing facilities.

Model Information

Manual Type

Re-Order Part Number F-917-0220

LANDOLL CORPORATION
1900 North Street
Marysville, Kansas 66508
(785) 562-5381
800-428-5655 ~ WWW.LANDOLL.COM

Copyright 2020. Landoll Corporation
"All rights reserved, including the right to reproduce this material or portions thereof in any form."

Eastern Wrecker Sales Inc