Model 440B/455B
Semitrailer
Parts Manual

LANDOLL COMPANY, LLC.
1900 North Street
Marysville, Kansas 66508
(785) 562-5381
800-428-5655 ~ WWW.LANDOLL.COM

F-1003-0921

Eastern Wrecker Sales Inc

NOTE

- Frame & Features:
- Capacity: 40 Ton (80,000 Pounds)
- Deck Rating: 50,000 Pounds in a 10 Foot Section
- Main Frame: Fabricated 80,000 and 100,000 PSI yield, 40 Inch Center, Four Beam Design
- Crossmembers: Alternating 4 Inch and 3 Inch Junior I-Beam on 8 Inch Centers
- - -- -Capacity ratings are frame capacities only. Actual load capacities may be restricted by factors such as weight ratings or state and federal regulations. These specifications are subject to change without notice.

Eastern Wrecker Sales Inc

Table of Contents

1 Illustrated Parts List

Instructions For Ordering Parts 1-1

General Assembly 1-2
- General Assembly 1-2

Decals 1-4
- Decal Arrangement 1-4

Upper Deck 1-8
- Upper Deck Assembly 1-8
- Hitch Plate Assembly 1-13

Hydraulic Electrical Air 1-14
- General Assembly 1-14
- Hydraulic System 1-16
- Air System 1-18

Cylinders & Air Connectors 1-20
- Cylinder Assembly - U/C 1-20
- Cylinder Assembly - Hi Flow 1-22
- Cylinder Assembly - Ported Rod Hi Flow 1-23
- Cylinder - 6 X 30 1-24
- Connectors - Front Sub Assembly 1-26
- Valve Assembly - Air Booster 1-27
- Valve Assembly - Three Spool 1-28
- Three Spool Solenoid Valve 1-30

Electrical 1-32
- Electrical System 1-32
- Wireless Remote Assembly, Brand (AFTER 08/01/2019) 1-36
- Wireless Remote Assy, Kit Components, Brand (AFTER 08/01/2019 1-37

Undercarriage 1-38
- General Items - 440B 1-38
- General Items - 455B 1-42
- Grease System, 2 Axle (Before 11/07/2018) 1-46
- Grease System, 2 Axle (After 11/07/2018 - Before 08/31/2020) 1-48
- Grease System, 2 Axle (After 08/31/2020) 1-50
- Grease System, 3 Axle (Before 11/07/2018) 1-54
- Grease System, 3 Axle (After 11/07/2018 - Before 08/31/2020) 1-58
- Grease System, 3 Axle (After 08/31/2020) 1-62

Suspensions 1-66
- Air Ride Suspension - 440B 1-66
- Air Ride Suspension - 440B Aqua 1-68
- Air Ride Suspension - 455B 1-70
- Air Ride Suspension - 455B Aqua 1-72
- Air Control Kit - Neway 1-74
- Suspension Hanger, 12.25 X 7.5, LSS- 25K-3.5 RLU 1-76
- Suspension Hanger, 16.5, LSS-25K-5.5 RLU 1-78
- Suspension Hanger, 12.25 and 16.5 Drum Brake, RLU-228 1-80

Eastern Wrecker Sales Inc

Shock Strap, Limit, LSS-25K-3.5 1-84
Shock Strap, Limit, RLU-228-3.5 & 5.5. 1-85
Wheels 1-86

Axle Brakes 1-88
Axle 12.25 Disc Brakes & Hub Assembly, Dexter (OPTION) 1-88
Axle 12.25 x 7.5 Drum Brakes, Dexter 1-92
Axle 12.25 x 7.5 Drum and Hub Assembly 1-96
Axle 16.5 Disc Brakes & Hub Assembly, Dexter (OPTION) 1-98
Axle 16.5 x 7 Drum Brakes, Dexter 1-102
Axle 16.5 x 7 Drum and Hub Assembly, Dexter 1-107

Air Brake System. 1-108
Air Brake System, 440B 1-109
Air Brake System, 440B Aqua Package 1-111
Air Brake System, 455B 1-113
Air Brake System, 455B Aqua Package 1-115
ABS Brake Kit - Rockwell 1-117

Tire Inflation System 1-118
Thermalert, 2 Axle Air System (OPTION). 1-119
Thermalert, 3 Axle AIr System (OPTION). 1-121
Thermalert Electrical System & Components (OPTION) 1-123
Tire Inflation System - Harness Kit (OPTION) 1-125

Winches 1-126
Winch Installation - 12K Spring Tension (BRADEN) 1-127
Winch Items - 12,000 Lb. (BRADEN) 1-129
Winch Installation - 20K Spring Tension (BRADEN) 1-133
20K Air Tension/Release (BRADEN) 1-135
Winch Items - 20,000Lb. (BRADEN) 1-141
Winch - Air Shift Cylinder 1-144
Winch - Motor Assembly. 1-145
Winch Installation - 20K 2 Speed (Warn) 1-147
Winch Items - 20K 2 Speed (WARN) 1-149
30K 2 Speed (WARN). 1-151
Winch Items - 30K 2 Speed (WARN) 1-153

Landing Gear 1-154
Landing Gear Installation - Bolt-On Park Stand 1-155
Landing Gear Installation - Jost 410 1-156
Landing Gear Installation - Jost #A401T19 1-157

Dock Levelers 1-158
Dock Level Installation 1-159
Dock Leveler Assembly - Single 60K 1-161
Dock Leveler Assembly - Single 60K (400-102 Big Brake) 1-163
Dock Leveler Assembly - Single 120K 1-164
Dock Leveler Leg Assembly - W/ Lock Valve 1-165

Bulkheads - Options 1-168
Dock Leveler Valve. 1-168
Bulkhead Assembly 1-169
Bulkhead - Chain Rack Lights General Assembly 1-171
Bulkhead - Chain Rack Lights Electrical System 1-173
Bulkhead Installation - Special 1-175

Eastern Wrecker Sales Inc

Towmate Strobe Installation . . . 1-177
Bulkhead - Work Light Installation . . . 1-179

Bumper - Options . . . 1-180
Bumper - Strobe Installation - Option . . . 1-181

Electrical-Options . . . 1-182
Disconnect Switch-174139 . . . 1-183
7-Way Electrical Installation . . . 1-184
Rear Side Electrical Outlet Installation . . . 1-185

Engines - Options . . . 1-186
25 HP Upper Deck Package . . . 1-187
Engine - Front Mount Extension Package Installation . . . 1-193
Engine - Front Mount Installation . . . 1-194
Engine - Upper Deck Stand Installation . . . 1-195

Hydraulic Kits - Options . . . 1-196
Hydraulic Wet Kit Items - 30 Gallon . . . 1-197
Hydraulic Wet Kit Items - 35 Gallon Aluminum . . . 1-199
Hydraulic Conversion Kit - Ball to Flat . . . 1-201

Hydraulic Park Stand . . . 1-202
Hydraulic Park Stand - General Items . . . 1-203
Hydraulic Park Stand - Hydraulic Items . . . 1-205
Hydraulic Cylinder - 3-1/2 X 20 . . . 1-207

Lighting-Options . . . 1-208
Backup Alarm/Light Installation . . . 1-209
Under Deck - Lighting Installation . . . 1-211
Four Corner Light Installation . . . 1-213
Swingout Light Installation . . . 1-215
Swing-Arm Light Assembly - Turn Signal/Emergency Flasher . . . 1-216
Swingout Marker Light Installation - Red/Amber . . . 1-217
Swing-Arm Marker Light Assembly - STREET . . . 1-218
Swing-Arm Light Assembly - CURB . . . 1-219

Pop-Up Roller Installation . . . 1-220
Winch Work Lights-191833 . . . 1-220
8 Pop-Up Roller Installation . . . 1-221
Pop-Up Roller Installation . . . 1-225

Scale-Options . . . 1-226
Loadmaxx-166821 . . . 1-227
Quickload-175358 (Replaced by 226657,226661) . . . 1-228
Right Weigh . . . 1-229
Quickload Plus-226657 (After 03/31/2020) . . . 1-230
Loadmaxx Plus-226661 (After 03/31/2020) . . . 1-231

Spare Tire Mount-Options . . . 1-232
Spare Tire-Post Mount Assembly . . . 1-233

Step-Options . . . 1-234
Spare Tire-Mount Horizontal Assembly-163790 . . . 1-234
Step, Folding Assembly-189700 . . . 1-235
Step, Folding Handle Assembly-226645 . . . 1-237
Step, Drawer Retractable Assembly-22245 . . . 1-239
Step, Retractable Assembly-216272 . . . 1-241

Eastern Wrecker Sales Inc

Storage-Options **1-242**
Registration Holder Assembly-175989 1-243

Upper Deck - Options **1-244**
Cover Assembly-139635 1-245
Extension Bridge Storage Rack Assembly-136828 1-246
Front Flip Extension-103538, 174253, 197164. 1-247
Upper Deck - Slope Light Installation 1-248
Tilt Wedge Assembly 1-249
Upper Deck - Roller Installation 1-251

Winch Options **1-252**
Guard Assembly, 12K/20K (BRADEN)-145598 1-253
Guard Assembly, 20K/30K (WARN)-171166 1-254
Guard Assembly, Pivot 20K-163769. 1-255
Guide Assembly, 4 Roller 12K (BRADEN)-161155 1-256
Guide Assembly Components, 4 Roller 12K (BRADEN)-161150. 1-257
Guide Assembly, 4 Roller 20K (BRADEN)-145589 1-259
Guide Assembly, 4 Roller 20K/30K (WARN)-162258. 1-261
Tie Down Assembly, D-ring-3-793-010041. 1-263

Miscellaneous Options **1-264**
Trim Plate Assembly-166767 1-264
Gooseneck Mud Flap Installation 1-265
Outrigger Installation. 1-267
Suspension Pressure Gauge Installation 1-269
Slope Filler Deck Installation 1-270

Eastern Wrecker Sales Inc

Instructions For Ordering Parts

ORDER PARTS FROM LANDOLL PARTS DISTRIBUTION CENTER

- -- - Repair parts must be ordered through an Authorized Dealer - -- -

PHONE NO: 1-800-423-4320 OR 1-785-562-5381 **FAX NO: 888-527-3909**
ORDER ONLINE: Dealer.landoll.com

IDENTIFICATION PLATE

The identification plate, which lists the model number and serial number, is located on the front of the frame (***See Figure 1-1***.)

SERIAL NUMBER NOMENCLATURE

The serial number for the Model 440B/455B Series Semitrailer is located on the identification plate.

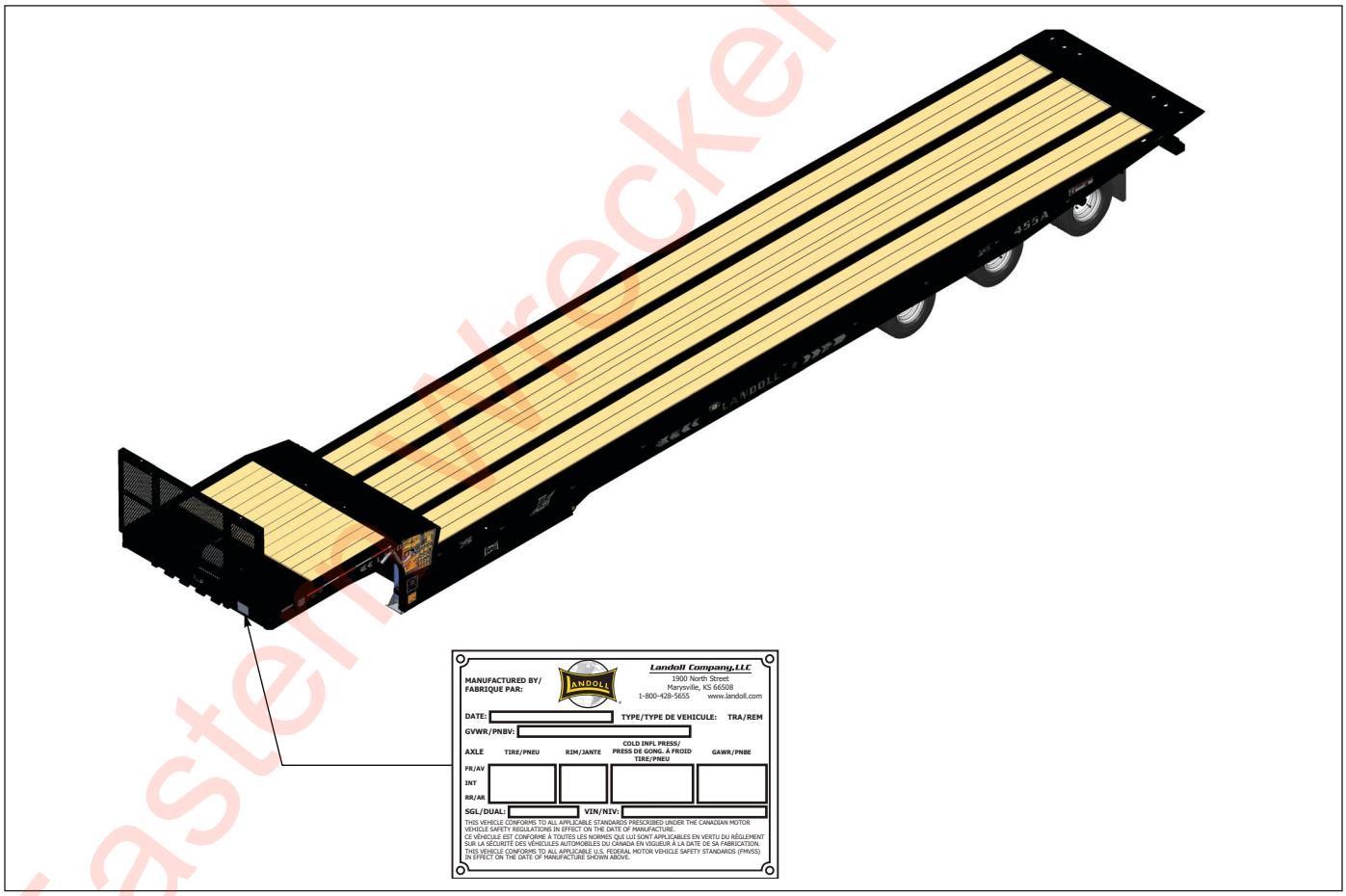

Figure 1-1: Identification Plate and Location

Eastern Trecker Sales Inc

General Assembly

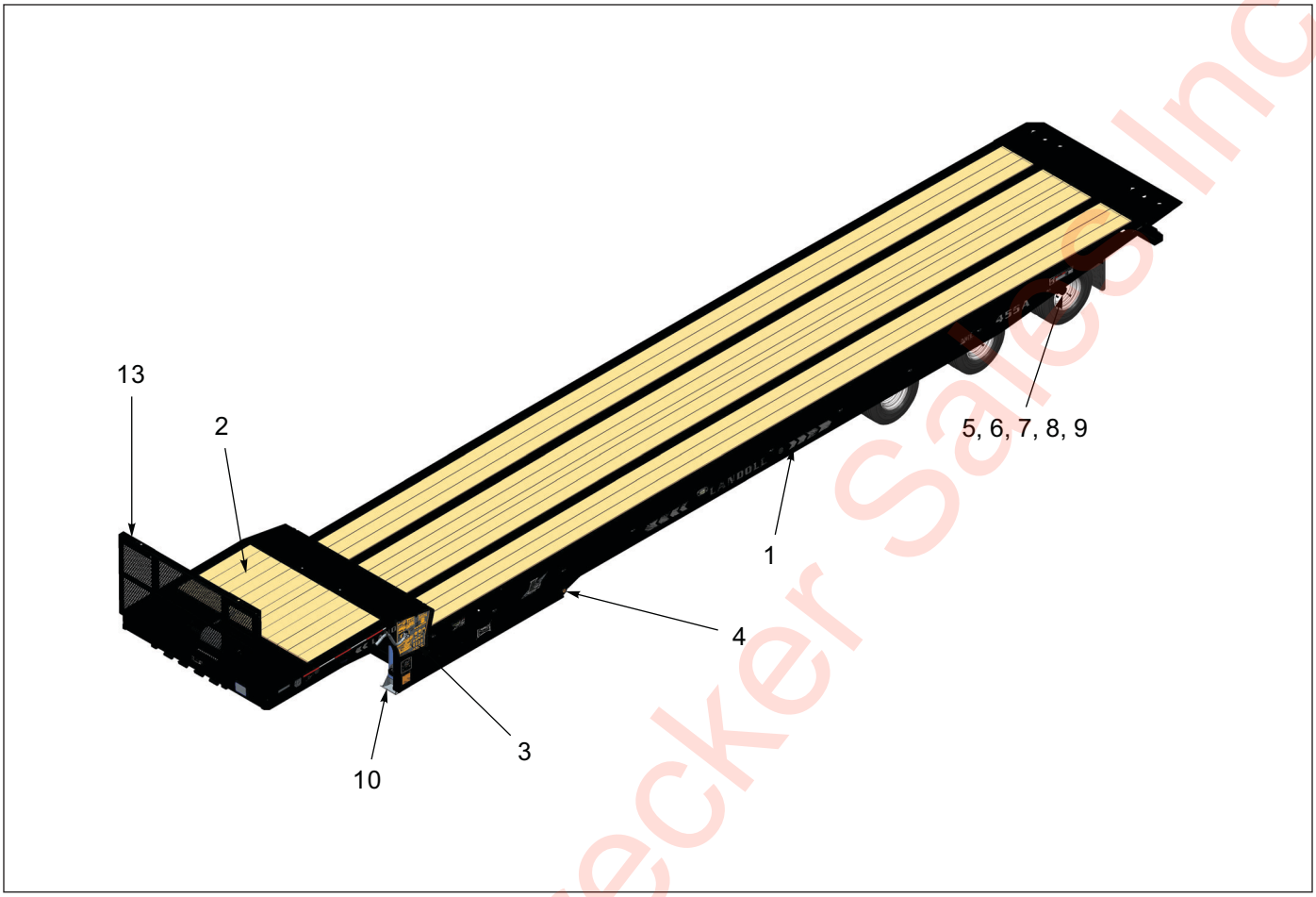

Figure 1-2: General Assembly

General Assembly

ITEM	PART/PAGE NO.	DESCRIPTION	QTY.
1	1-4 - 1-5	DECAL INSTALLATION	-----
2	1-8 - 1-11-13	UPPER DECK ASSEMBLY	-----
3	1-17 - 1-29	HYDRAULIC SYSTEM AND ASSEMBLIES	-----
4	1-32 - 1-35	ELECTRICAL SYSTEM AND REMOTE ASSEMBLIES	-----
5	1-38 - 1-47	UNDERCARRIAGE ASSEMBLIES	-----
6	1-58 - 1-57	AIR RIDE SUSPENSION	-----
7	1-84 - 1-63	AXLE AND BRAKE ASSEMBLY	-----
8	1-108 - 1-71	AIR BRAKE SYSTEM	-----
9	1-118- 1-81	TIRE INFLATION SYSTEM	-----
10	1-126 - 1-108	WINCHES	-----
11	1-154 - 1-124	LANDING GEAR AND DOCK LEGS **(NOT SHOWN)**	-----
12	1-226 - 1-127	SCALES **(NOT SHOWN)**	-----
13	1-168 - 1-138	BULKHEADS	-----
14	1-180 - 1-205	BUMPER, ELECTRICAL, ENGINE DRIVES & MISC. OPTIONS **(NOT SHOWN)**	-----

Eastern Wrecker Sales Inc

Table provided for general use.

NOTES:

Eastern Wrecker Sales Inc

Decals

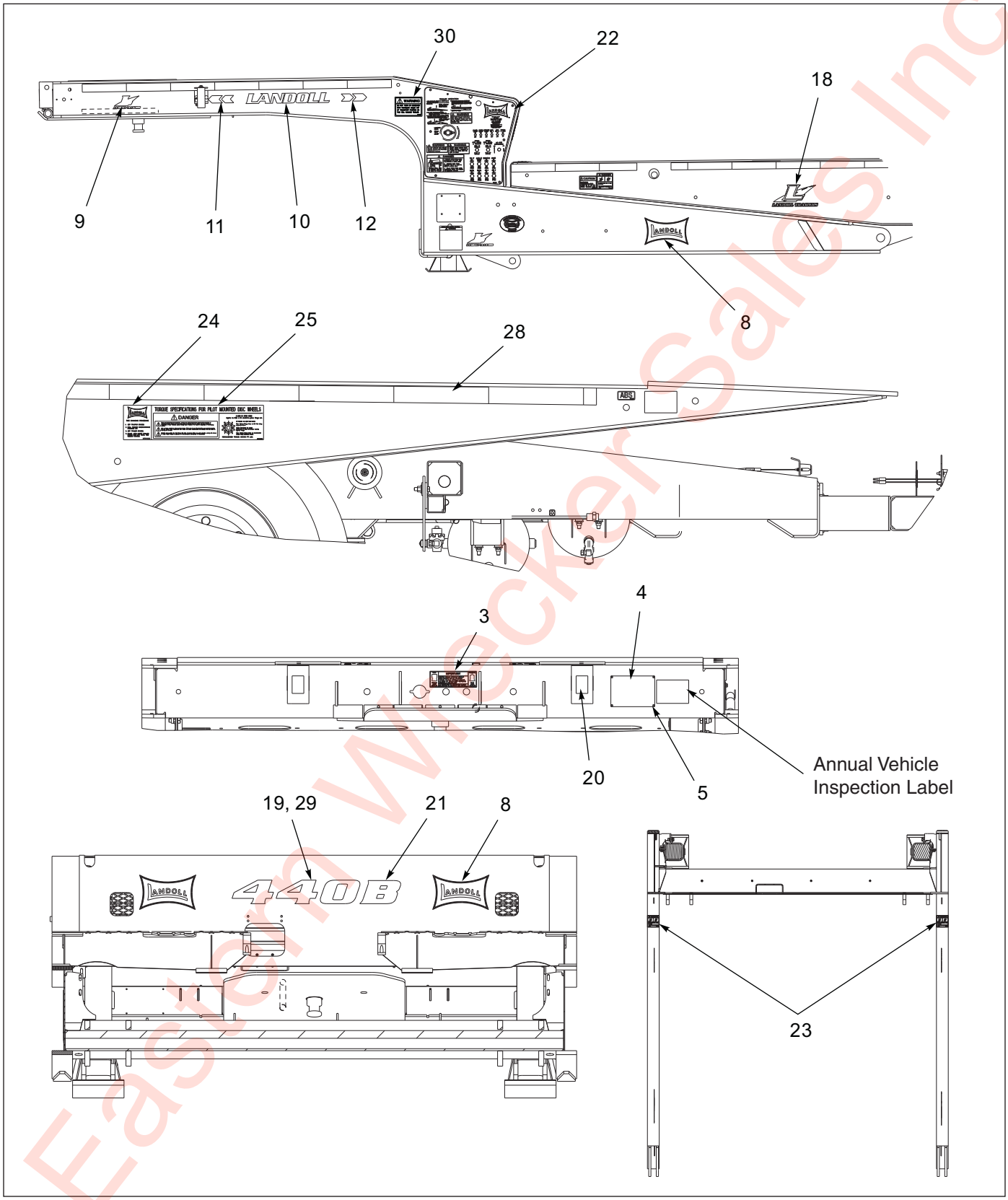

Figure 1-3: Decal Arrangement (1 of 2)

Eastern Wrecker Sales Inc

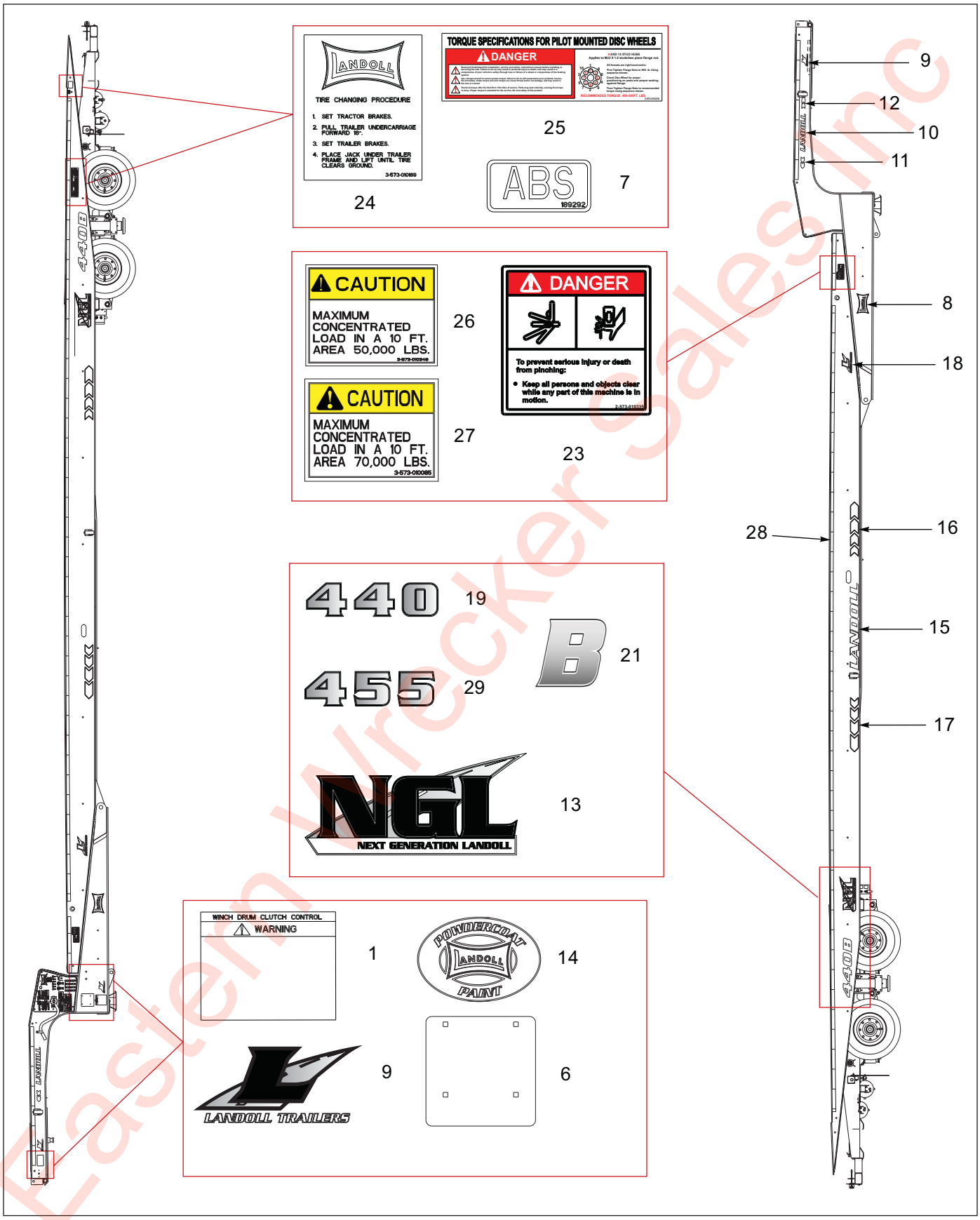

Figure 1-4: Decal Arrangement (2 of 2)

Eastern Wrecker Sales Inc

Decal Arrangement

ITEM	PART NO.	DESCRIPTION	QTY.	
	212386	DECAL INSTALLATION 440B **(REF. ONLY)**	- -	
	214440	DECAL INSTALLATION 455B **(REF. ONLY)**		- -
1	100600	DECAL, WARNING, BRADEN WINCH	- -	- -
2	101855	WARNING LAMP LABEL, ABS **(NOT SHOWN)**	1	1
3	105822	DECAL HYD COUPLER	1	1
4	155780	TRAILER VIN PLATE	1	1
5	156010	RIVET, BLIND, .156 X 1/2 GRIP	4	4
6	189253	PLATE, COVER, WEIGH SCALE	1	1
7	189292	DECAL, ABS, WHITE	1	1
8	192208	DECAL, BOWTIE 6-3/4 X 11	4	4
9	196165	DECAL, HIGHWAY L	3	3
10	196167	DECAL, LANDOLL SMALL	2	2
11	196168	DECAL, ARROW SMALL 2LH	2	2
12	196169	DECAL, ARROW SMALL 2RH	2	2
13	196171	DECAL, NEXT GENERATION	2	2
14	196173	DECAL, POWDERCOAT SMALL	1	1
15	196174	DECAL, LANDOLL LARGE	2	2
16	196175	DECAL, ARROW LARGE 4RH	2	2
17	196176	DECAL, ARROW LARGE 4LH	2	2
18	196177	DECAL, HIGHWAY L LARGE	2	2
19	197419	DECAL, 440 TRAILER	- -	--
20	202578	REFLEXITE WHITE 3 IN. LENGTH	- -	- -
21	212388	DECAL LETTER B	3	3
22	212432	PLACARD CONTROL PANEL	1	1
23	2-573-010335	DECAL, DANGER, PINCH POINT **(IF EQUIPPED WITH G/N TILT WEDGE ASSEMBLY, REQ 6 EACH)**	4	4
24	3-573-010189	DECAL, TIRE CHANGING PROCEDURE	1	1
25	3-573-010210	DECAL, TORQUE SPEC 8-10 STUD HUB	1	1
26	3-573-010349	DECAL, CAUTION, 50K/10FT CONC LOAD	2	- -
27	3-573-010085	DECAL, CAUTION, 70K/10FT CONC LOAD	- -	2
28	3-573-010377	DECAL, 2 IN. REFLEXITE TAPE, RED/WHITE	- -	- -
29	197420	DECAL, 455 TRAILER	--	3
30	217155	DECAL, WARNING TRAVELING AXLE	1	1

Eastern Wrecker Sales Inc

Table provided for general use.

NOTES:

Eastern Wrecker Sales Inc

Upper Deck

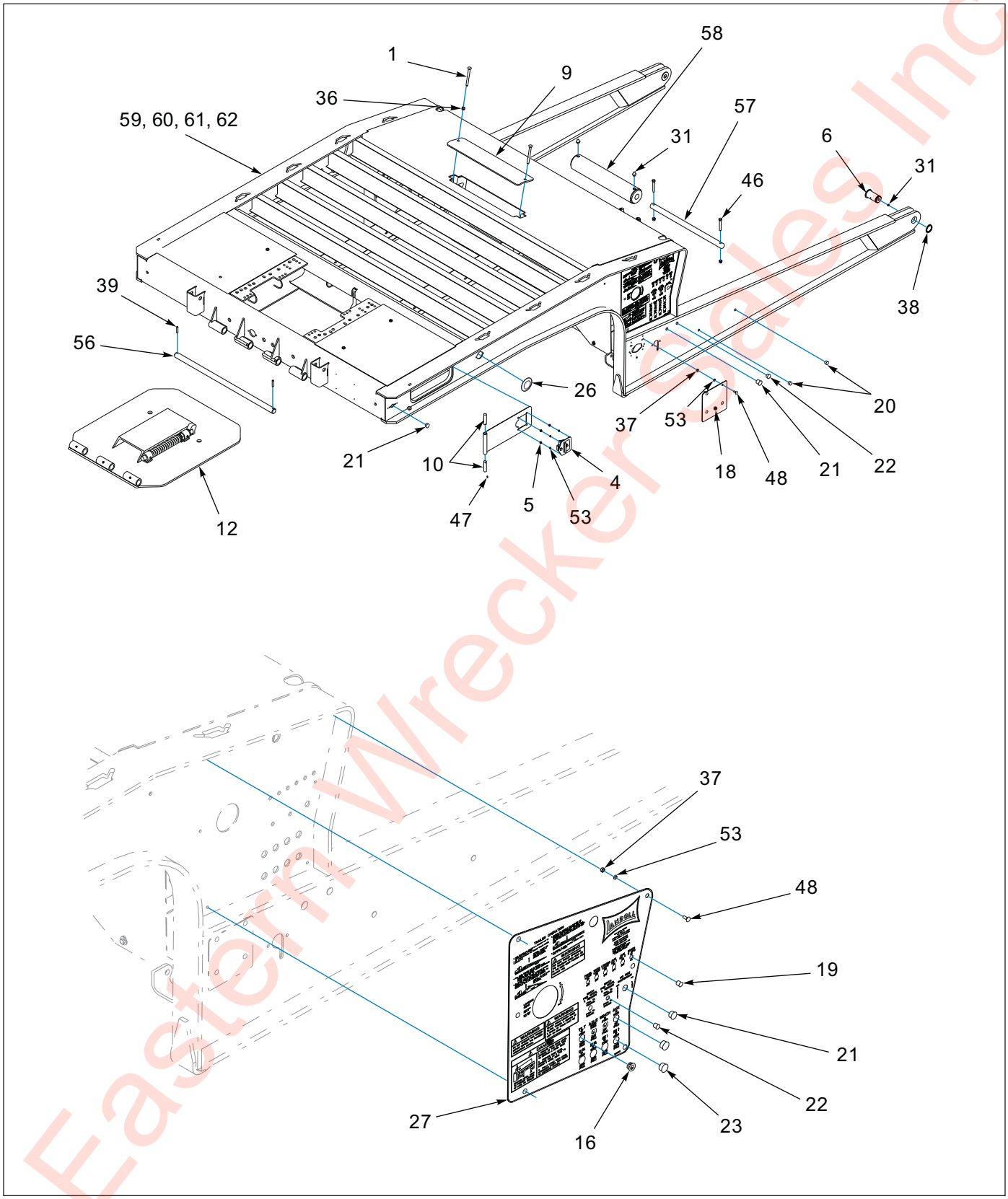

Figure 1-5: Upper Deck Assembly (1 of 3)

Eastern Wrecker Sales Inc

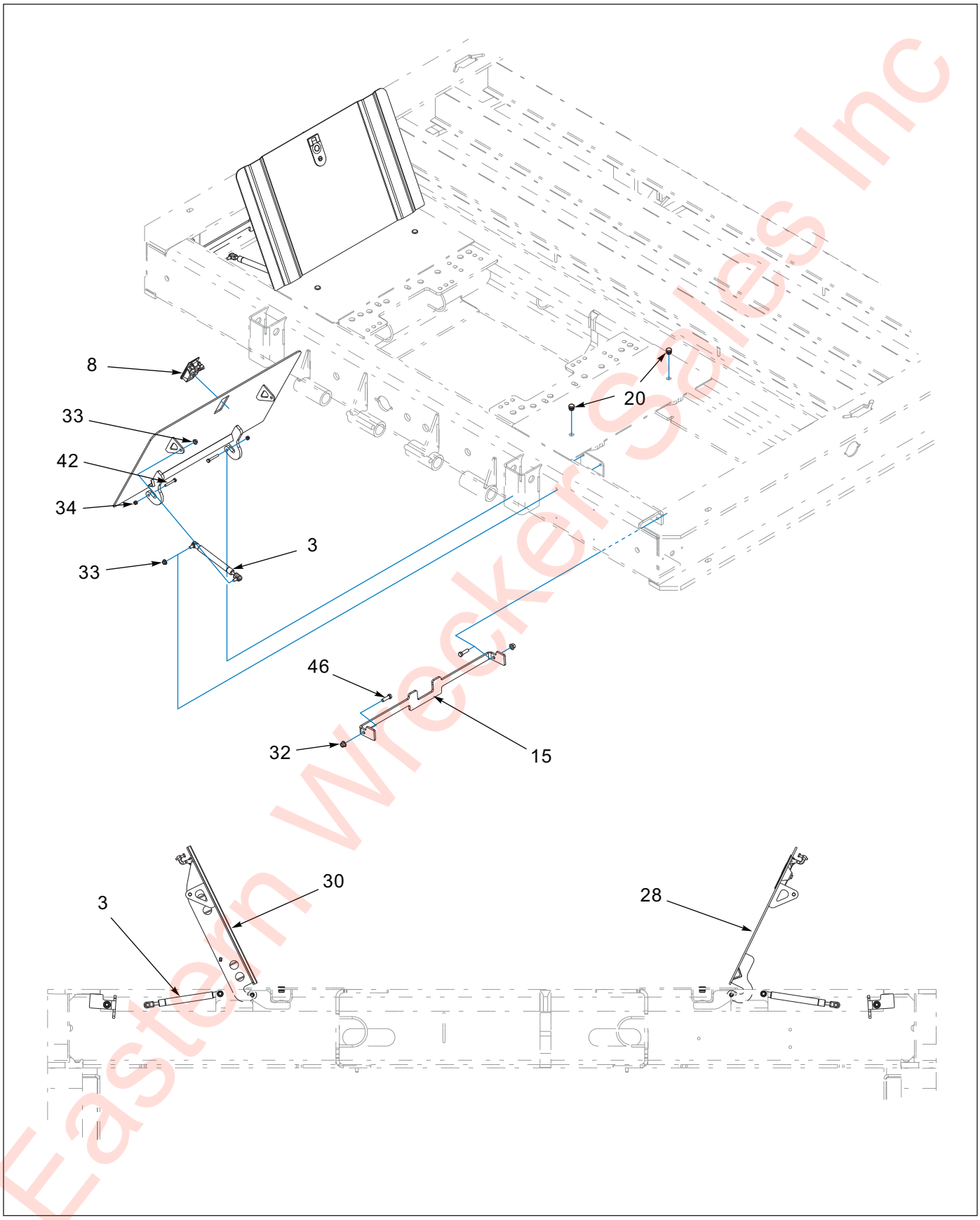

Figure 1-6: Upper Deck Assembly (2 of 3)

Eastern Wrecker Sales Inc

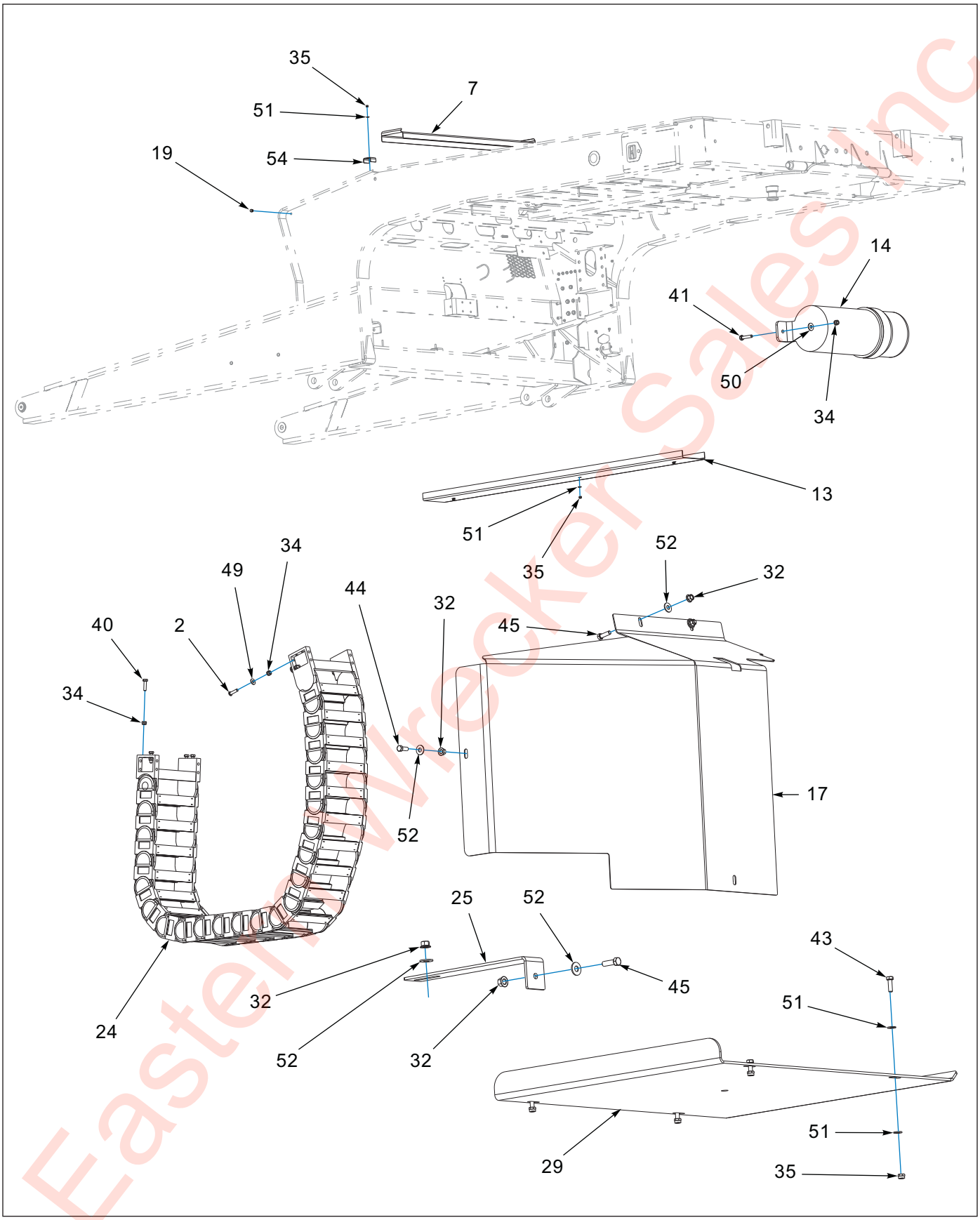

Figure 1-7: Upper Deck Assembly (3 of 3)

Eastern Wrecker Sales Inc

Upper Deck Assembly

ITEM	PART NO.	DESCRIPTION	QTY.			
	213994	G/N ASSEMBLY, TOP TLBX **(REF. ONLY)**	- -			
	215202	G/N ASSEMBLY, 400B SIDE TLBX **(REF. ONLY)**		- -		
	215196	G/N ASSEMBLY, 400B HD TOP TLBX **(REF. ONLY)**			- -	
	214643	G/N ASSEMBLY, 400B HD SIDE TLBX **(REF. ONLY)**				- -
1	100939	SCREW, RD HD, SQ NK, 1/2-13X5-1/2	2	2	2	2
2	108610	SCREW, BHSC 1/4-20UNCX1	4	4	4	4
3	110435	BT CONSOLE LIFT, GAS SPRING	2	--	2	--
4	114814	LATCH, FOLDING T, LOCKABLE	--	2	--	2
5	115877	NUT, HEAVY HEX, 1/4-20 GR5	--	8	--	8
6	116943	PIN WLDMT, PIVOT 410	2	2	2	2
7	117565	COVER, HOSE LOWER, 410 G/N	1	1	1	1
8	118853	COMPRESSION LATCH	2	--	2	--
9	131196	PLATE, WINCH CABLE WEAR U/D 400	1	1	1	1
10	135181	BUSHING, NYLATRON TOOLBOX	--	4	--	4
11	136352	DOOR, WLDMT, TOOLBOX 400, RMV	--	2	--	--
11	140851	DOOR, WLDMT, TOOLBOX, 410HD, RMV	--	--	--	2
12	141609	HITCH PLATE ASSEMBLY, 400 **(SEE PAGE 1-13)**	1	1	1	1
13	145104	COVER, HOSE UPPER, 410 HD	--	--	2	2
14	150076	MANUAL HOLDER, 4-1/4 ID	2	2	2	2
15	176069	CHAIN HOLDER	2	--	2	--
16	178444	BUSHING NYLON INSERT 9/16 ID	3	3	3	3
17	186890	SHIELD, HYD CONTROLS	1	1	1	1
18	189253	PLATE COVER, WEIGH SCALE	1	1	1	1
19	189278	PLUG, PLASTIC PANEL, 1/2 - 9/16	6	6	6	6
20	189279	PLUG, PLASTIC PANEL, 5/8	8	4	8	4
21	189280	PLUG, PLASTIC PANEL, 3/4	3	3	3	3
22	189281	PLUG, PLASTIC PANEL, 13/16	3	3	3	3
23	189282	PLUG, PLASTIC PANEL, 7/8	5	5	5	5
24	189326	SUPPORT, E-CHAIN, 22 LINKS, 3838W	1	1	1	1
25	192152	SHIELD BRACE, G/N 400A	1	1	1	1
26	204158	HOLE, PLUG 2-1/4 ID X 3-5/8 OD	2	2	2	2
27	212432	PLACARD, CONTROL PANEL, 400B	1	1	1	1
28	213496	NWB TOOLBOX LID	- -	--	- -	--
29	213500	G/N TOOLBOX BOTTOM PLATE	1	1	1	1
30	213502	EURO TOOLBOX DOOR	- -	--	- -	--
31	1-298-010001-1	FITTING, GREASE, 1/4-28 STR SHORT	4	4	4	4
32	1-510-010001	NUT, 3/8-16 UNC, FLANGE LOCK	11	7	11	7
33	1-510-010004-03	NUT, FLG HD, SPIRAL LOCK, 5/16-18 UNC	4	--	4	--
34	1-512-010005-01	NUT, HEX, SLFLKG, 1/4-20 UNC, GRB	18	14	18	14
35	1-512-010005-03	NUT, HEX, SLFLKG, 5/16-18 UNC, GRB	17	17	15	17
36	1-512-010005-09	NUT, HEX, SLFLKG, 1/2-13 UNC, GRB	4	4	4	4
37	1-512-010007-05	NUT, HEX, 1/4-20 UNC, GR2	10	10	10	10
38	1-630-010021-02	RING, RETAINING 2 HD	2	2	2	2
39	1-647-010004255	ROLL PIN, SLOTTED, 3/8 X 2	2	2	2	2
40	1-654-010047-06	SCREW, HEX, 1/4-20UNX1 GR5	4	4	4	4
41	108610	SCREW BHSC 1/4-20UNCX1	6	6	6	6
42	1-654-010047-09	SCREW, HEX, 1/4-20UNCX1-3/4 GR5	4	--	4	--
43	1-654-010049-05	SCREW, HX CP, 5/16-18UNC X 1 GR5	8	8	8	8
44	1-654-010051-05	SCREW, HEX, 3/8-16UNCX1 GR5	1	1	1	1

Eastern Tanker Sales Inc

Upper Deck Assembly

ITEM	PART NO.	DESCRIPTION	QTY.			
45	1-654-010051-06	SCREW, HEX, 3/8-16UNCX1-1/4 GR5	7	3	7	3
46	1-654-010055-11	SCREW, HEX, 1/2-13UNCX3-1/2 GR5	2	2	2	2
47	1-654-010147-06	SCREW, RNDHD, SLF/TPG #6-20X3/4	--	8	--	8
48	1-654-010158-1	SCREW, RD HD, SQ NCK, 1/4-20X3/4	10	10	10	10
49	1-861-010032-06	WASHER, FLAT, ZP/CD, 1/4N	4	4	4	4
50	1-861-010032-07	WASHER, FLAT, ZP/CD, 1/4W	6	6	6	6
51	1-861-010032-08	WASHER, FLAT, ZP/CD, 5/16N	25	25	23	25
52	1-861-010032-11	WASHER, FLAT, ZP/CD, 3/8W	6	6	5	5
53	1-861-010034-09	WASHER, LKG, HLCL SPR, 1/4	10	18	10	18
54	2-181-010001	CLAMP	3	3	3	3
55	1-822-010001	TRIM 1350 3/8 BLK FINE PEBBLE **(BY THE FOOT)**	16	16	16	16
56	3-557-010469	HINGE PIN, FIFTH WHEEL	1	1	1	1
57	3-642-010134	ROLLER ROD	1	1	1	1
58	3-645-010059	ROLLER WLDMT, CABLE-UPPER DECK	1	1	1	1
59	213978	G/N WLDMT, 400B TOP TLBX	- -	--	--	--
60	215198	G/N WLDMT, 400B SIDE DOOR	--	- -	--	--
61	215192	G/N WLDMT, 400B HD, TPTLBX	--	--	- -	--
62	214639	G/N WLDMT, 400B HD SIDE DOOR	--	--	--	- -

Eastern Wrecker Sales Inc

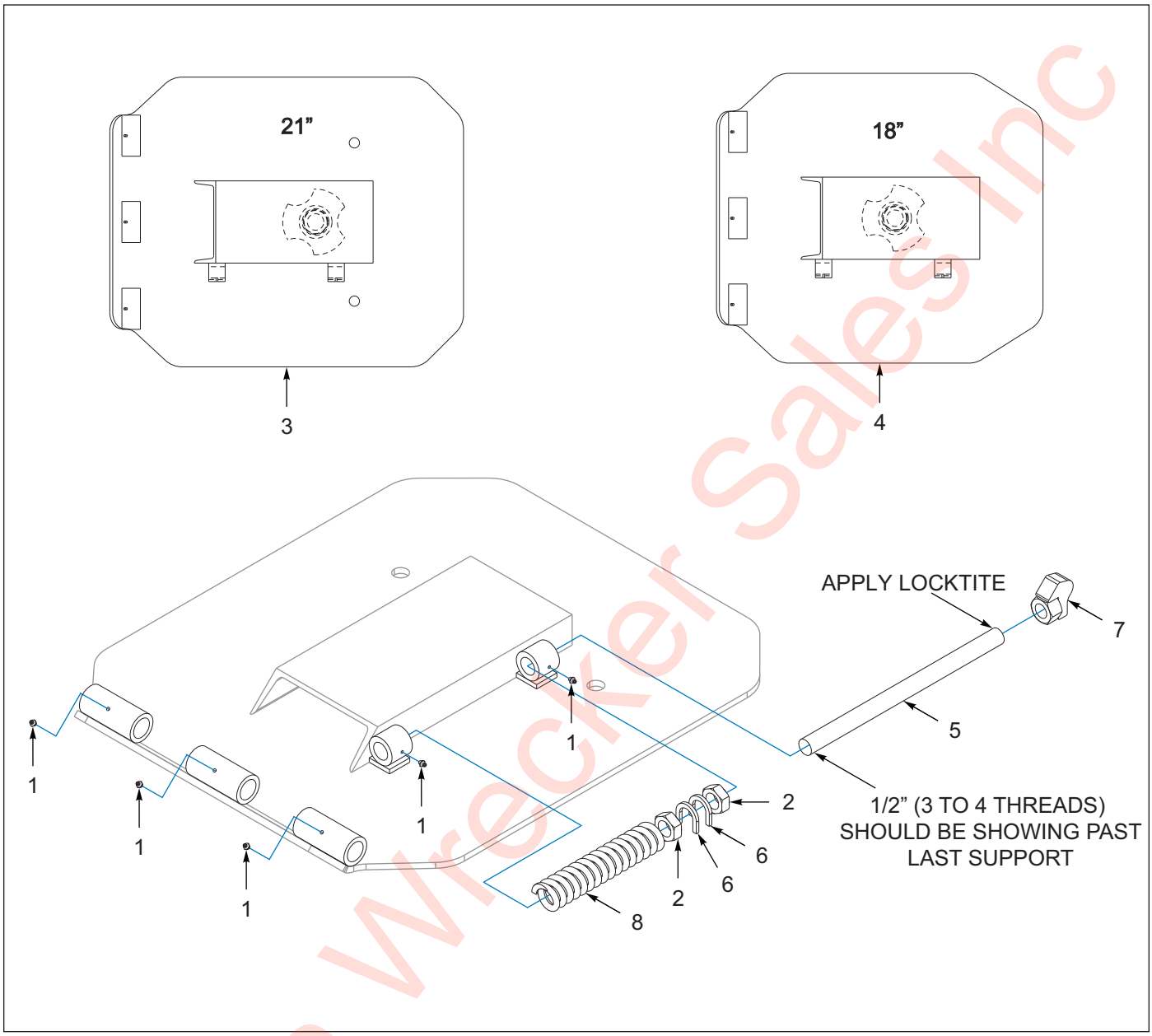

Figure 1-8: Hitch Plate Assembly

Hitch Plate Assembly

ITEM	PART NUMBER	DESCRIPTION	QTY
	141609	HITCH PLATE ASSY 400 **(INSTALLATION SEE PAGE 1-8)**	- -
1	1-298-010001-1	ZERK FITTING 1/4 SAE	5
2	100823	NUT,HEX JAM,1-1/4-7 GR2	2
3	116822	HITCH PLATE 410 **(21”)**	1
4	131105	HITCH,PLATE 18KP 400 SERIES**(18”)**	1
5	117556	LATCH ROD 410 G/N	1
6	117562	SHIM, HITCH 410 G/N	2
7	118889	CAM WLDMT FIFTH WHEEL LATCH	1
8	2-720-010002	SPRING-CLAMP OUTER	1
9	-----	LOCKTITE 242 BLUE REMOVABLE **(#242 LOCKTITE 50ML BOTTLE)**	- -

Eastern Wrecker Sales Inc

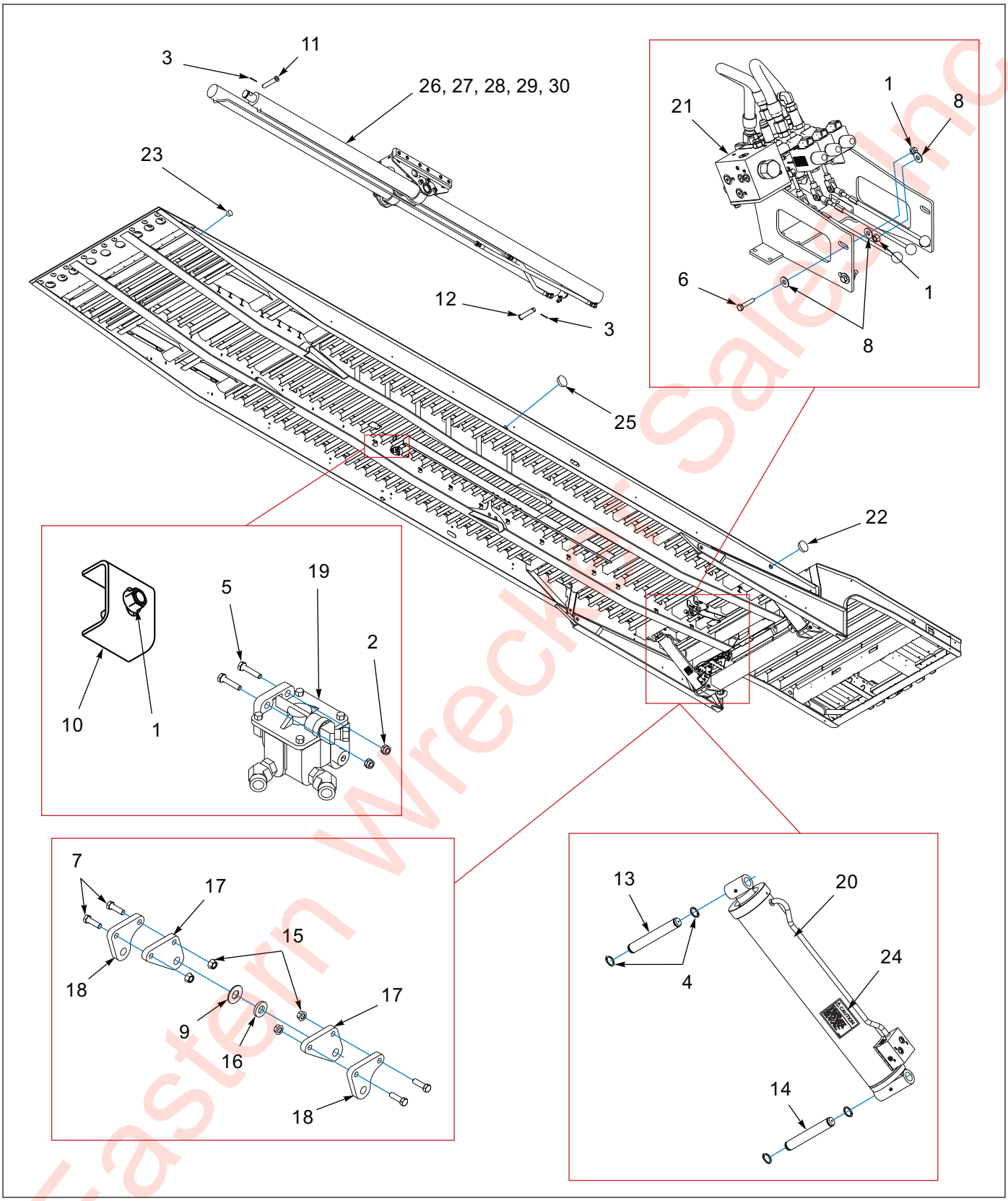

Figure 1-9: General Assembly

Eastern Wrecker Sales Inc

General Assembly

ITEM	PART NO.	DESCRIPTION	QTY.						
	212396	HYD ELE AIR 440B-41-102 REMOTE **(REF. ONLY)**	- -						
	212398	HYD ELE AIR 440B-48-102/108 REMOTE **(REF. ONLY)**		- -					
	212407	HYD ELE AIR 440B-50-102/108 REMOTE **(REF. ONLY)**			- -				
	212412	HYD ELE AIR 440B-53-102/108/120 REMOTE **(REF. ONLY)**				- -			
	214442	HYD ELE AIR 455B-48/50-102/108/120 REMOTE **(REF. ONLY)**					- -		
	214444	HYD ELE AIR 455B-50/53 102/108 REMOTE **(REF. ONLY)**						- -	
	215745	HYD ELE AIR 455B-57-102/108 REMOTE **(REF. ONLY)**							- -
1	1-510-010001	NUT, 3/8-16 UNC FLANGE LOCK	12	14	14	16	14	17	18
2	1-512-010005-01	NUT,HEX,SLFLKG, 1/4-20 UNC,GRB	2	2	2	2	2	2	2
3	1-557-010362-54	PIN, COTTER, 3/16 X 2 1/4	2	2	2	2	2	2	2
4	1-630-010021-01	RING, 1.5 RETAINING HD	8	8	8	8	8	8	8
5	1-654-010027-7	SCREW.HEX, 1/4-20UNCX1-1/4 GR8	2	2	2	2	2	2	2
6	1-654-010051-07	SCREW, HEX, 3/8-16UNCX 1-1 /2 GR5	2	2	2	2	2	2	2
7	1-654-010061-07	SCREW, HEX, 3/ 4-10UNCX2 1 /2 GR5	4	4	4	4	4	4	4
8	1-861-010032-11	WASHER, FLAT, ZP/CD, 3/8W	6	6	6	6	6	6	6
9	1-861-010032-29	WASHER, FLAT, ZP/CD, 1-1/ /4W	1	1	1	1	1	1	1
10	2-181-010001	CLAMP	8	10	10	12	10	13	14
11	3-557-010031	PIN, CYL., UNDERCARRIAGE	2	2	2	2	1	1	1
12	3-557-010033	PIN, CYL. BUTT END	--	--	--	--	1	1	1
13	3-557-010470-01	PIN, 1-1/2 X 9-1/8 ZP	2	2	2	2	2	2	2
14	3-557-010470-02	PIN, 1-1/2 X 9-13/16 ZP	2	2	2	2	2	2	2
15	103841	NUT,FLG,PREVAILING TR0,3/4-10 UNC	4	4	4	4	4	4	4
16	123150	WASHER CYLINDER PIN 410	1	1	1	1	1	1	1
17	127422	ANCHOR CYLINDER ADJ BOLT-ON	--	2	--	2	2	2	2
18	127691	ANCHOR CYL ADJ BOLT-ON 435CA	2	--	2	--	--	--	--
19	141607	VALVE ASSY AIR BOOSTER	1	1	1	1	1	1	1
20	186807	CYLINDER, 6IN. X 41IN. X 30IN. STROKE,CB	2	2	2	2	2	2	2
21	186886	VALVE ASSY,3 SPL,35GPM,SOLENOID	1	1	1	1	1	1	1
22	189276	PLUG, PLASTIC PANEL 2-1 /2	2	2	2	2	2	2	2
23	189280	PLUG, PLASTIC PANEL 3/ 4	1	1	1	1	1	1	1
24	193455	DECAL CAUTION CNTR BLNCE VALVE	2	2	2	2	2	2	2
25	204158	HOLE PLUG 2-1 /4" ID X 3-5/8" OD	2	2	2	2	2	2	2
26	189258	CYL ASSY U/C 440A-50CA	--	--	1	--	--	--	--
27	189259	CYL ASSY U/C 440A-53	--	--	--	1	--	--	1
28	189261	CYL ASSY U/C 440A-48/455A-50CA	--	1	--	--	1	1	--
29	189262	CYL ASSY U/C 440A-41	1	--	--	--	--	--	--
30	189267	CYL ASSEMBLY U/C 455-48/50CA	--	--	--	--	1	--	--

Eastern Wecker Sales Inc

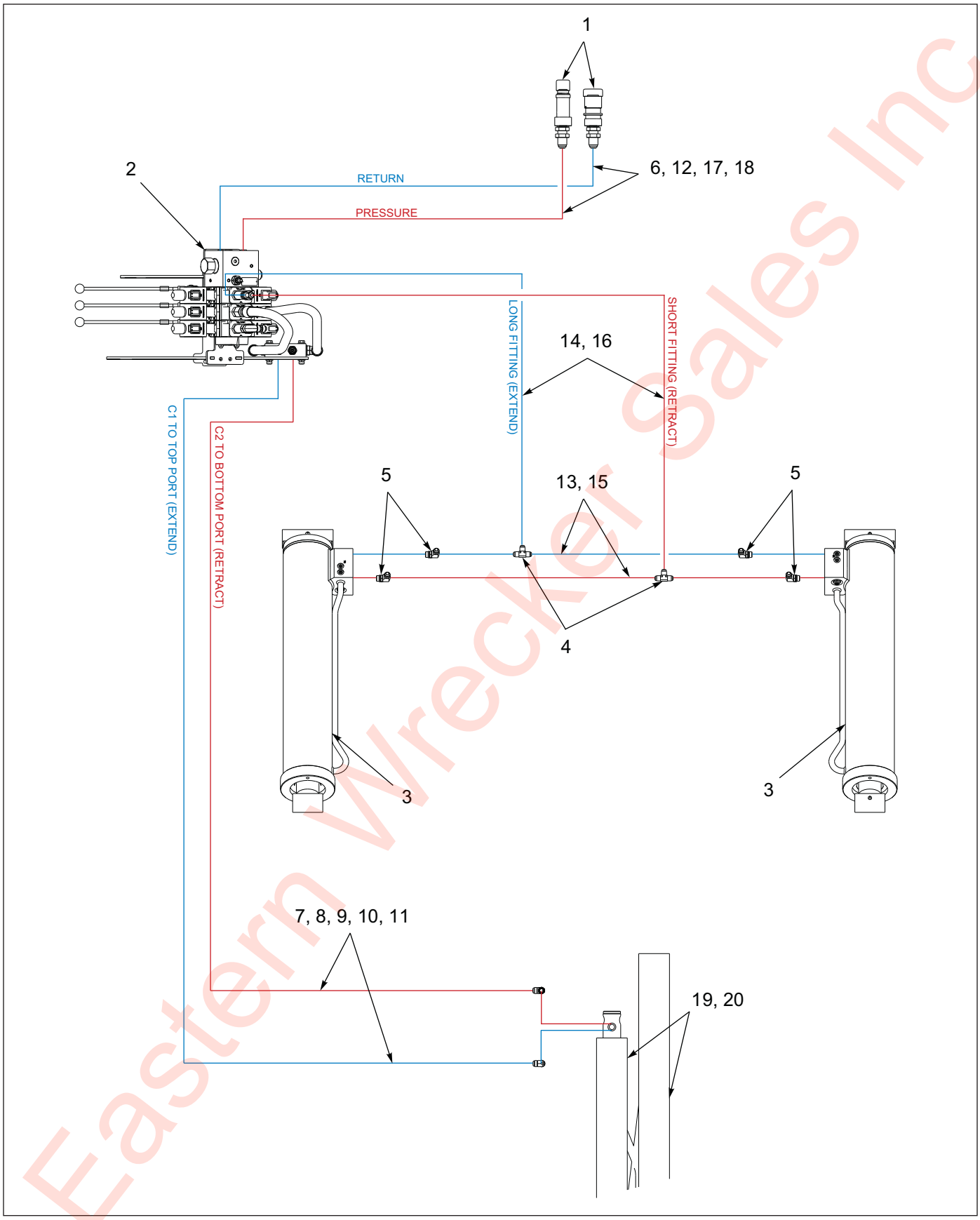

Figure 1-10: Hydraulic System

Eastern Wrecker Sales Inc

Hydraulic System

ITEM	PART NO.	DESCRIPTION	QTY.		
	212396	HYD ELE AIR 440B-41-102 REMOTE **(REF. ONLY)**	- -		
	212398	HYD ELE AIR 440B-48-102/108 REMOTE **(REF. ONLY)**	- -		
	212407	HYD ELE AIR 440B-50-102/108 REMOTE **(REF. ONLY)**	- -		
	212412	HYD ELE AIR 440B-53-102/108/120 REMOTE **(REF. ONLY)**	- -		
	214442	HYD ELE AIR 455B-48/50-102/108/120 REMOTE **(REF. ONLY)**		- -	
	214444	HYD ELE AIR 455B-50/53-102/108 REMOTE **(REF. ONLY)**		- -	
	215745	HYD ELE AIR 455B-57-102/108 REMOTE **(REF. ONLY)**			- -
1	143163	CONNECTOR, FRONT SUB ASSEMBLY	- -	- -	- -
2	186886	VALVE ASSEMBLY, 3-SPOOL, 35GPM, SOLE	- -	- -	- -
3	186807	CYLINDER, 6 X 30, 30 STROKE, CB	- -	- -	- -
4	2033-8-8S	ADAPTER, TEE #8 UNION	2	2	2
5	2062-8-8S	ADAPTER, 90, #8 O-RING TUBE	4	4	4
6	166352	HOSE ASSEMBLY, 3/4 X 180 SAE37 STR	2	2	2
7	189297	HOSE ASSEMBLY, 5/8 X 164 SAE37 STR	2	2	--
8	189354	HOSE ASSEMBLY, 5/8 X 134 SAE37 STR	--	2	--
9	189355	HOSE ASSEMBLY, 5/8 X 158 SAE37 STR	--	2	2
10	189356	HOSE ASSEMBLY, 5/8 X 144 SAE37 STR	2	--	--
11	189357	HOSE ASSEMBLY, 5/8 X 122 SAE37 STR	--	2	--
12	190634	HOSE ASSEMBLY, 3/4 X 204 SAE37 STR90	2	2	--
13	1410119	HOSE ASSEMBLY, 1/2 X 50 SAE37, STR90	4	4	4
14	1422072	HOSE #8 ASSEMBLY, 78.5 IN. OAL	2	2	--
15	1-397-010301064	HOSE ASSEMBLY, 1/2 X 64, SAE37 STR	4	4	--
16	1-397-010302070	HOSE ASSEMBLY, 1/2 X 70, SAE37 STR	2	2	2
17	1-397-010305190	HOSE ASSEMBLY, 3/4 X 190, SAE37 STR90	2	2	--
18	1-397-010305216	HOSE ASSEMBLY, 3/4 X 216, SAE37, STR90	2	2	--
19	189259	CYL ASSEMBLY, U/C 440A-53	- -	--	--
20	189267	CYL ASSEMBLY, U/C 455-48/50CA	--	- -	- -

Eastern Wheeler Sales Inc

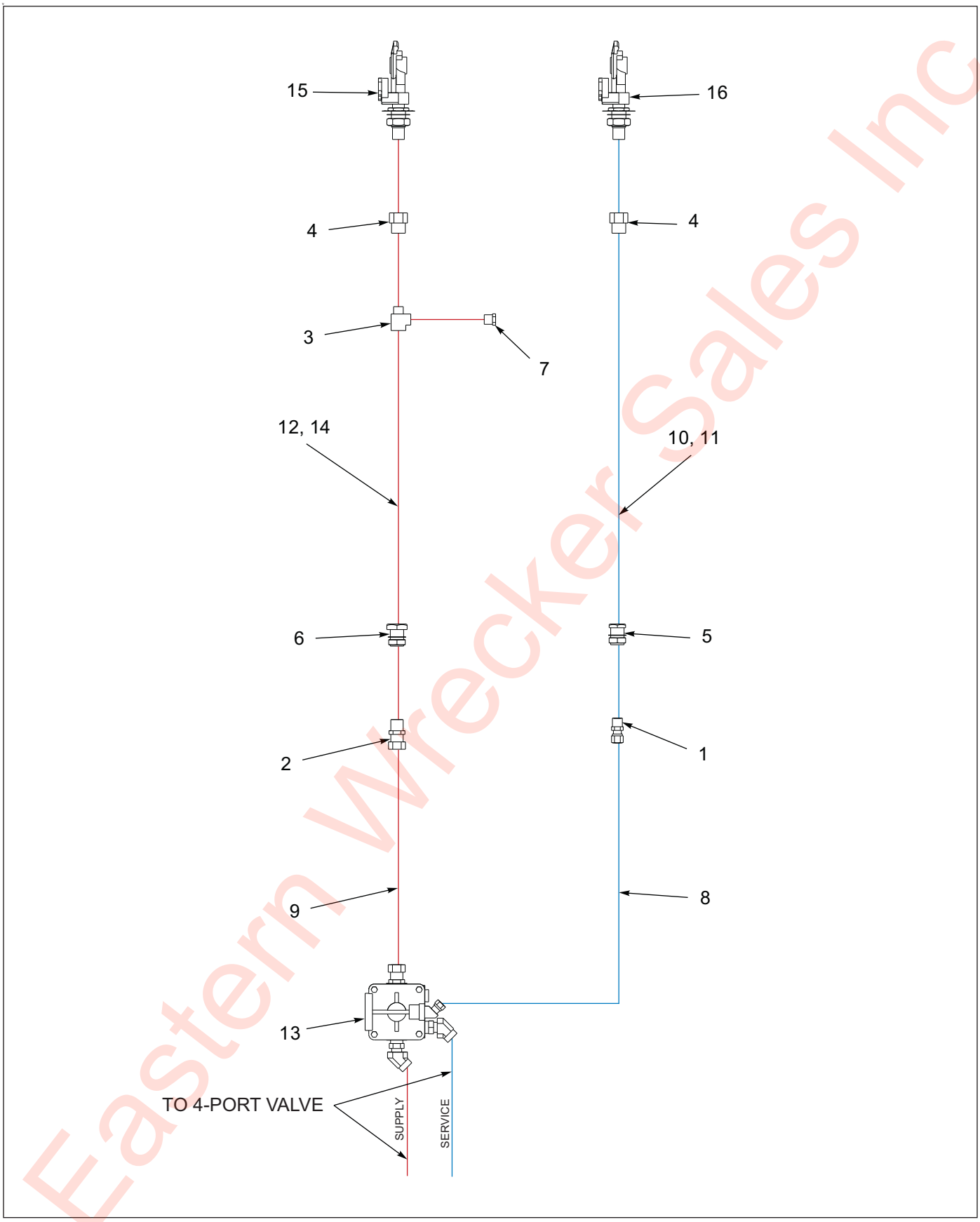

Figure 1-11: Air System

Eastern Wrecker Sales Inc

Air System

ITEM	PART NO.	DESCRIPTION	QTY.	
	212396	HYD ELE AIR 440B/455B STD **(REF. ONLY)**	- -	
	212412	HYD ELE AIR 440B/455B HD **(REF. ONLY)**		- -
1	1-297-010007-12	FITTING, AIR 3/8 TUBE TO 3/8 NPT	1	1
2	1-297-010007-16	FITTING, AIR 1/2 TUBE X 1/2 NPT	1	1
3	1-297-010018-03	FITTING, BRS PIPE, ST TEE 3/8	1	1
4	1-297-010021-05	FITTING, BRS PIPE, CPLG 1/2 X 3/8	2	2
5	1-297-010022-03	FITTING, AIR ANCHR CPLG, 3/8 NPT	1	1
6	1-297-010022-04	FITTING, AIR ANCHR CPLG, 1/2 NPT	1	1
7	1-297-010033-03	FITTING, BRASS PLUG, HEX 3/8 NPT	1	1
8	1-833-010002	TUBING NYLON, 3/8 OD	18	18
9	1-833-010003	TUBING NYLON, 1/2 OD	18	18
10	100949	HOSE, AIR 3/8 X 222, WITH 3/8 ENDS	1	--
11	122557	HOSE, AIR 1/2 X 240,.38-.5 NPT	1	--
12	149051	HOSE, AIR 1/2X264, .38-.5 NPT **(USED ON HD ONLY)**	--	1
13	141607	VALVE ASSY, AIR BOOSTER **(SEE PAGE 1-27) (TO 4-PORT VALVE; SEE PAGES 1-70, 1-72, 1-74)**	- -	- -
14	109209	HOSE, AIR 3/8X244 W/ 3/8 ENDS **(USED ON HD ONLY)**	--	1
15	108801	GLAD HAND, RED, AIR	1	1
16	108802	GLAD HAND, BLUE, AIR	1	1

Eastern Wrecker Sales Inc

Cylinders & Air Connectors

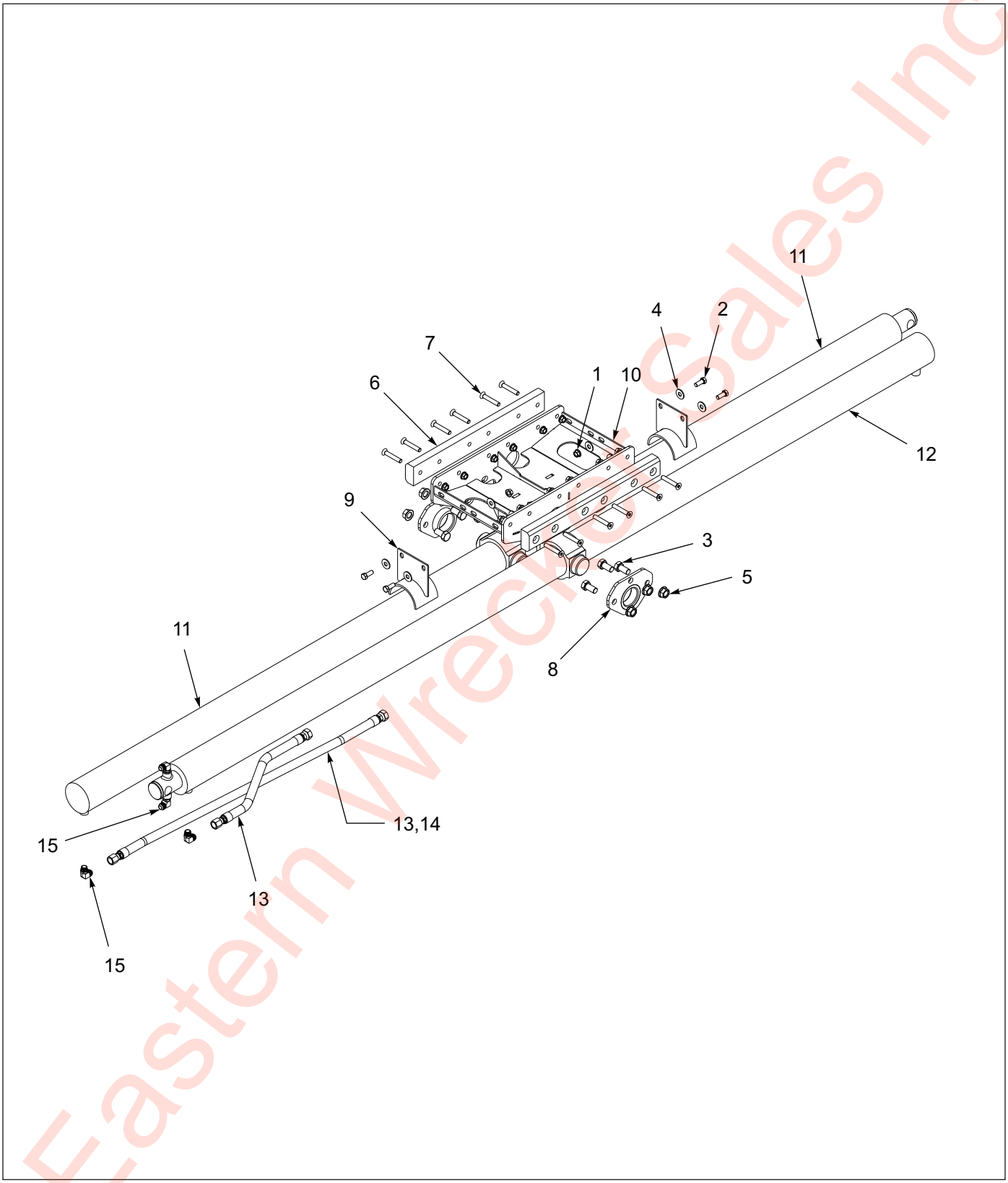

Figure 1-12: Cylinder Assembly - U/C

Eastern Wrecker Sales Inc

Cylinder Assembly - U/C

ITEM	PART NO.	DESCRIPTION	QTY.				
	189258	CYL ASSY, U/C 440A-50CA	- -				
	189259	CYL ASSY, U/C 440A-53		- -			
	189261	CYL ASSY, U/C 440A-48/455A-50CA			- -		
	189262	CYL ASSY, U/C 440A-41				- -	
	189267	CYL ASSY, U/C 455-48/50CA					- -
1	1-510-010003-09	NUT, FLG HD, SERR 1/2-13 UNC	16	16	16	16	16
2	1-654-010055-02	SCREW, HEX 1/2-13 UNC X 1-1/4 GR5	4	4	4	4	4
3	1-654-010061-03	SCREW, HEX 3/4-10 UNC X 1-1/2 GR5	6	6	6	6	6
4	1-861-010032-15	WASHER, FLAT ZP/CD, 1/2W	8	8	8	8	8
5	103841	NUT, FLG PREVAILING TRQ, 3/4-10	6	6	6	6	6
6	117386	NYLATRON SLIDE, U/C CYL 425	2	2	2	2	2
7	118627	SCREW, HXSKT CTSK, 1/2-13 X 3	12	12	12	12	12
8	122621	BRACKET, WLDMT CYL MT 410	2	2	2	2	2
9	142050	SADDLE, WLDMT U/C CYL TRUN	2	2	2	2	2
10	142053	MOUNT, WLDMT CYL TRUN 400	1	1	1	1	1
11	186834	CYLINDER, 4 X 138 HI FLOW **(SEE PAGE 1-22)**	1	1	--	--	--
11	189264	CYLINDER, 4 X 100 HI FLOW **(SEE PAGE 1-22)**	--	--	--	1	--
11	189265	CYLINDER, 4 X 126 HI FLOW **(SEE PAGE 1-22)**	--	--	1	--	1
12	186835	CYLINDER, 4 X 126 PORTED ROD HI FLOW **(SEE PAGE 1-23)**	1	--	1	--	--
12	189263	CYLINDER, 4 X 100 PORTED ROD HI FLOW **(SEE PAGE 1-23)**	--	--	--	1	1
12	189266	CYLINDER, 4 X 138 PORTED ROD HI FLOW **(SEE PAGE 1-23)**	--	1	--	--	--
13	189304	HOSE ASSY, 1/2 X 24, SAE 37 STR-STR	1	1	--	2	1
13	189305	HOSE ASSY, 1/2 X 36, #10 - #12 JIC	--	--	2	--	--
14	189306	HOSE ASSY, 5/8 X 39, #10 - #12 JIC	--	--	--	--	1
14	189307	HOSE ASSY, 5/8 X 48, #10 - #12 JIC	1	1	--	--	--
15	189302	ADAPTER, 90 #8 O-RING, #10 TUBE	4	4	4	4	4

Eastern Wrecker Sales Inc

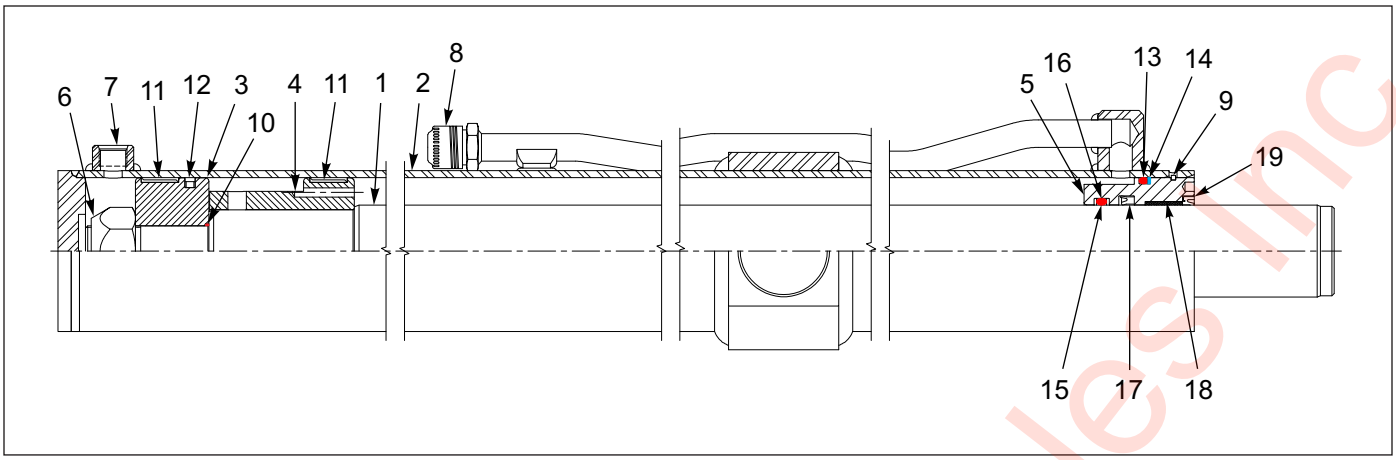

Figure 1-13: Cylinder Assembly - Hi Flow

Cylinder Assembly - Hi Flow

ITEM	PART NO.	DESCRIPTION	QTY.		
	189264	CYLINDER, HI FLOW, 4 X 100	- -		
	189265	CYLINDER, HI FLOW, 4 X 126		- -	
	186834	CYLINDER, HI FLOW, 4 X 138			- -
1	-----	PISTON ROD	1	--	--
1	-----	PISTON ROD	--	1	--
2	-----	BUTT & TUBE ASSEMBLY	1	--	--
2	-----	BUTT & TUBE ASSEMBLY	--	1	--
3	-----	PISTON	1	1	1
4	-----	PISTON	1	1	1
5	-----	GLAND	1	1	1
6	-----	LOCKNUT	1	1	1
7	-----	SHIPPING PLUG	1	1	1
8	-----	JIC CAP	1	1	1
9	-----	SQ RETAINING RING	1	1	1
10	-----	O-RING	1	1	1
11	-----	BEARING RING	2	2	2
12	-----	TEFLON SEAL ASSEMBLY	1	1	1
13	-----	O-RING	1	1	1
14	-----	BU-WASHER	1	1	1
15	-----	O-RING	1	1	1
16	-----	BU-WASHER	2	2	2
17	-----	U-CUP	1	1	1
18	-----	DX BUSHING	1	1	1
19	-----	WIPER	1	1	1
20	-----	INSTALLATION RING	1	1	1
21	201631	PACKING KIT **(ITEMS 9-17, 19 & 20, PRINCE CYL)**	1		
22	201631	PACKING KIT **(ITEMS 9-17, 19 & 20, PRINCE CYL)**		1	
23	201631	PACKING KIT **(ITEMS 9-17, 19 & 20, PRINCE CYL)**			1

Eastern Wrecker Sales Inc

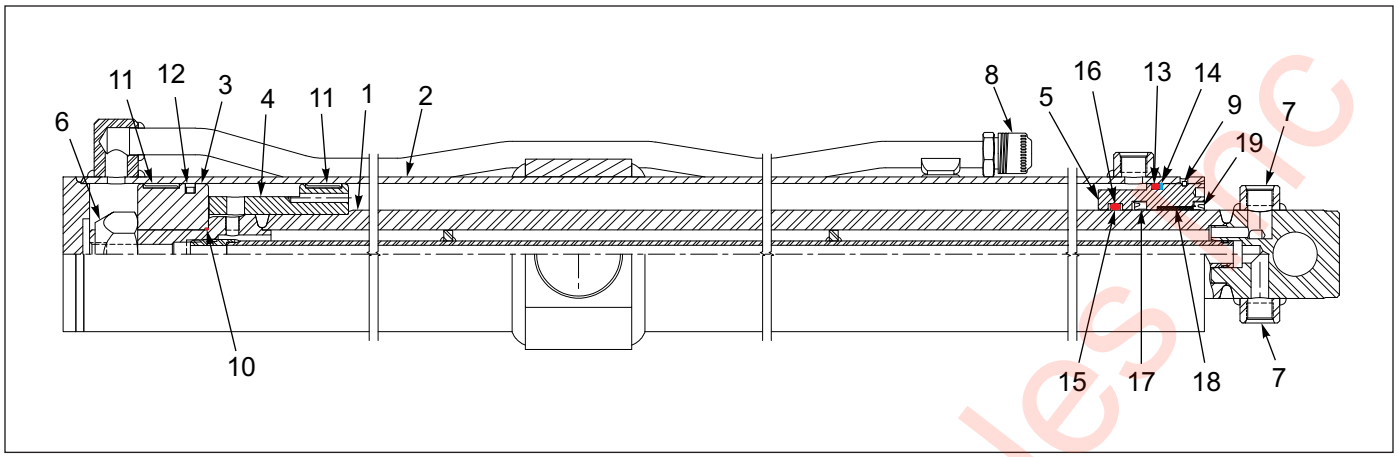

Figure 1-14: Cylinder Assembly - Ported Rod Hi Flow

Cylinder Assembly - Ported Rod Hi Flow

ITEM	PART NO.	DESCRIPTION	QTY.		
	189263	CYLINDER, PORTED ROD HI FLOW, 4 X 100	- -		
	186835	CYLINDER, PORTED ROD HI FLOW, 4 X 126		- -	
	189266	CYLINDER, PORTED ROD HI FLOW, 4 X 138			- -
1	-----	PISTON TUBE ASSEMBLY	1	--	--
1	-----	PISTON TUBE ASSEMBLY	--	1	--
2	-----	BUTT & TUBE ASSEMBLY	--	1	--
2	-----	BUTT & TUBE ASSEMBLY	--	--	1
3	-----	PISTON	1	1	1
4	-----	PISTON	1	1	1
5	-----	GLAND	1	1	1
6	-----	LOCKNUT	1	1	1
7	-----	SHIPPING PLUG	3	3	3
8	-----	JIC CAP	1	1	1
9	-----	SQ RETAINING RING	1	1	1
10	-----	O-RING	1	1	1
11	-----	BEARING RING	2	2	2
12	-----	TEFLON SEAL ASSEMBLY	1	1	1
13	-----	O-RING	1	1	1
14	-----	BU-WASHER	1	1	1
15	-----	O-RING	1	1	1
16	-----	BU-WASHER	2	2	2
17	-----	U-CUP	1	1	1
18	-----	DX BUSHING	1	1	1
19	-----	WIPER	1	1	1
20	-----	INSTALLATION RING	1	1	1
21	201631	PACKING KIT **(ITEMS 9-17, 19 & 20)**	- -	- -	- -

Eastern Wrecker Sales Inc

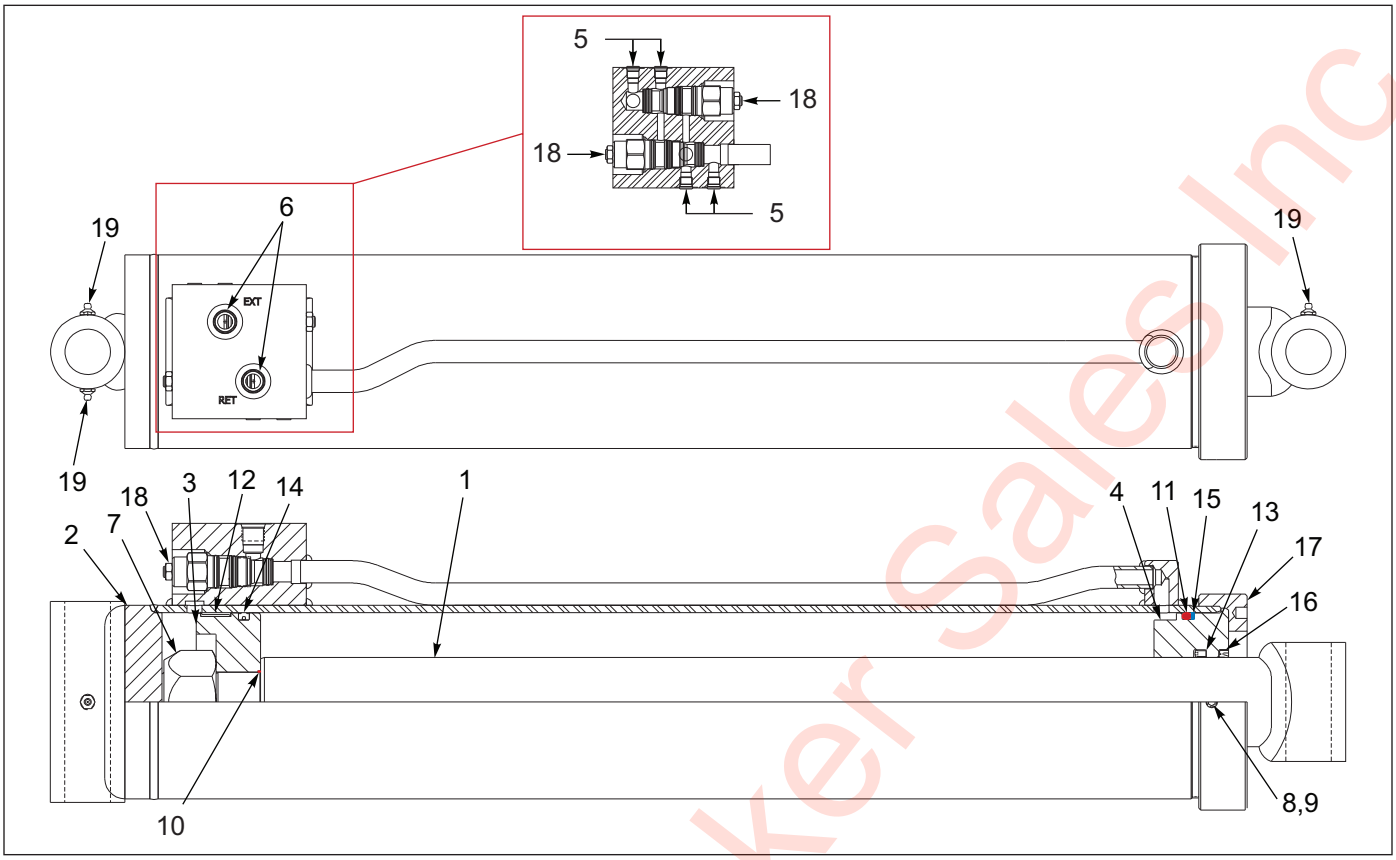

Figure 1-15: Cylinder - 6 X 30

Cylinder - 6 X 30

ITEM	PART NO.	DESCRIPTION	QTY.
	186807	CYLINDER,6"X41",30" STROKE, CB	- -
1	-----	PISTON ROD ASSEMBLY	1
2	-----	BUTT & TUBE ASSEMBLY	1
3	-----	PISTON	1
4	-----	GLAND	1
5	-----	ZERO LEAK PLUG	4
6	-----	SHIPPING PLUG	1
7	-----	LOCKNUT	1
8	-----	FLAT POINT SET SCREW	1
9	-----	NYLON LOCK	1
10	-----	O-RING **(PART OF ITEM 20)**	1
11	-----	O-RING **(PART OF ITEM 20)**	1
12	-----	PISTON BEARING RING **(PART OF ITEM 20)**	1
13	-----	SYMMETRICAL U-CUP **(PART OF ITEM 20)**	1
14	-----	CROWN SEAL **(PART OF ITEM 20)**	1
15	-----	STATIC BU-WASHER **(PART OF ITEM 20)**	1
16	-----	CANNED WIPER **(PART OF ITEM 20)**	1
17	-----	GLAND CAP	1
18	197587	CRTRDG,CB,30 GPM 10:1 SPCL SET	2
18	218141	VONBERG,CB,30GPM 10:1 SPCL SET	2
19	-----	GREASE ZERK	3
20	201633	PACKING KIT FOR 186807 **(INCLUDES ITEMS 10-16)**	1

Eastern Wrecker Sales Inc

Table provided for general use.

NOTES:

Eastern Wrecker Sales Inc

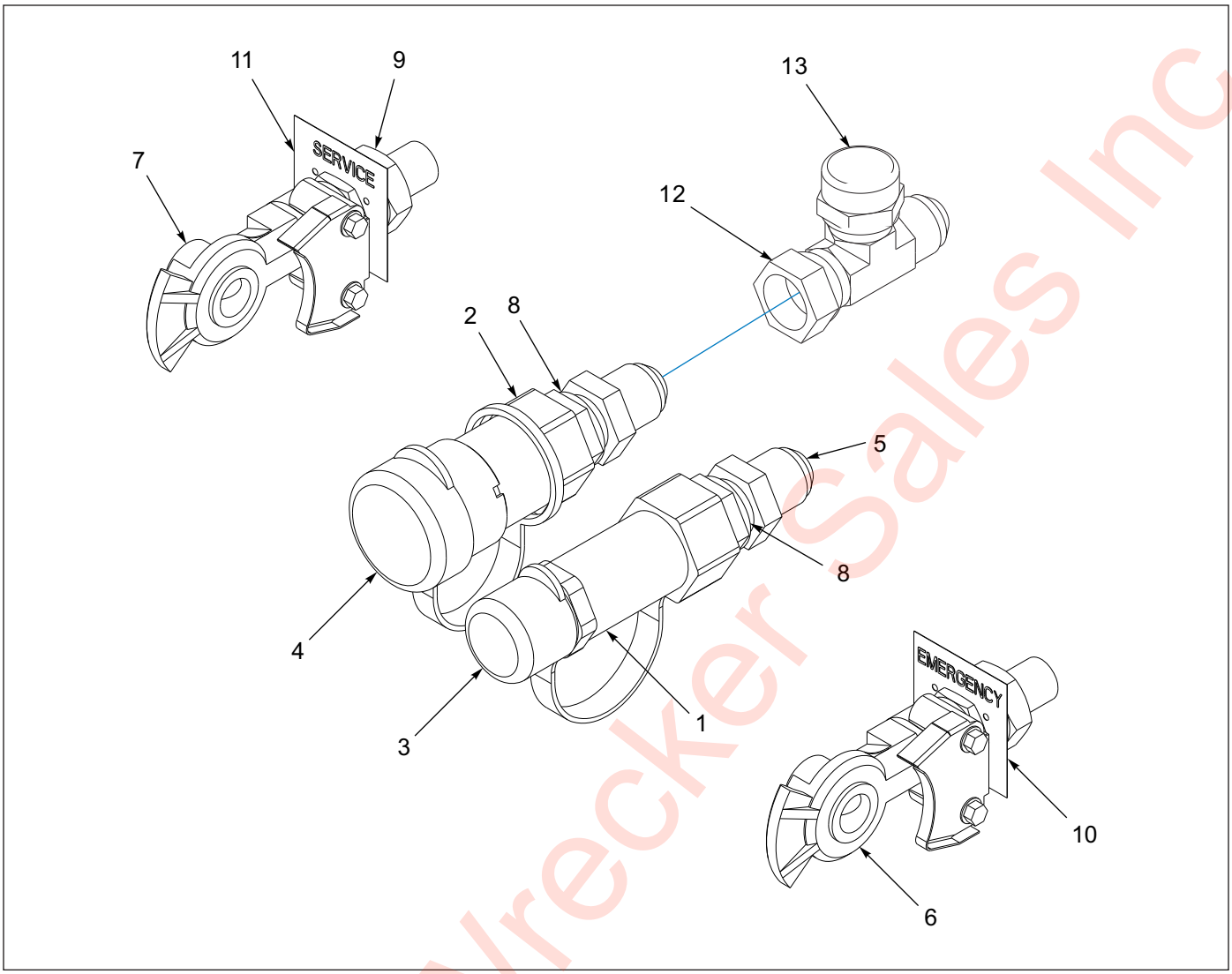

Figure 1-16: Connectors - Front Sub Assembly

Connectors - Front Sub Assembly

ITEM	PART NO.	DESCRIPTION	QTY.
	143163	CONNECTOR ASSY, FRONT SUB **(REF. ONLY)**	- -
1	105479	COUPLER, FLAT FACE MALE	1
2	105480	COUPLER, FLAT FACE FEMALE	1
3	105481	COUPLER, DUST CAP MALE	1
4	105482	COUPLER, DUST CAP FEMALE	1
5	105483	ADAPTER, BULKHEAD 12JIC-12ORING	2
6	108801	GLADHAND, RED AIR	1
7	108802	GLADHAND, BLUE AIR	1
8	169365	SPACER, HYDRAULIC COUPLER	2
9	55B61	FRAME UNION	2
10	55B61-6	TAG EMERGENCY LINE	1
11	55B61-7	TAG SERVICE LINE	1
12	203102-12-12S	ADAPTER, TEE, #12, SAE 37, SWIVL	1
13	210292-12S	HYD FITTING CAPNUT, .75	1

Eastern Wrecker Sales Inc

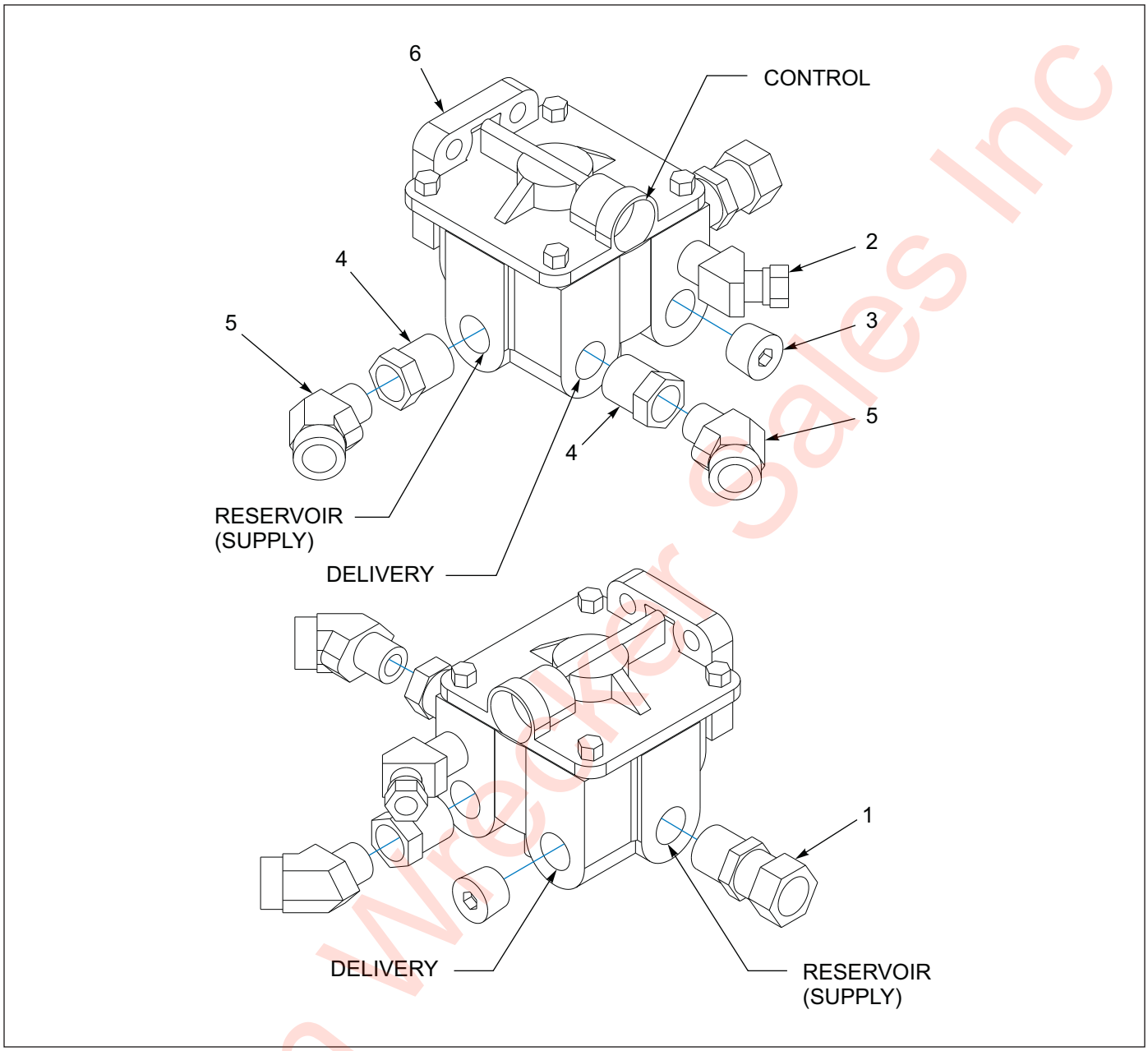

Figure 1-17: Valve Assembly - Air Booster

Valve Assembly - Air Booster

ITEM	PART NO.	DESCRIPTION	QTY.
	141607	VALVE ASSEMBLY, AIR BOOSTER	- -
1	1-297-010007-16	FITTING, AIR	1
2	1-297-010013-12	FITTING, AIR 45	1
3	1-560-010002-04	PLUG, PIPE, 1/2	1
4	2081-8-6S	REDUCER	2
5	2088-6-6S	ADAPTER, 45	2
6	3-843-010038	VALVE, AIR RELAY-FAST AIR BALANCE	1

Eastern Wrecker Sales Inc

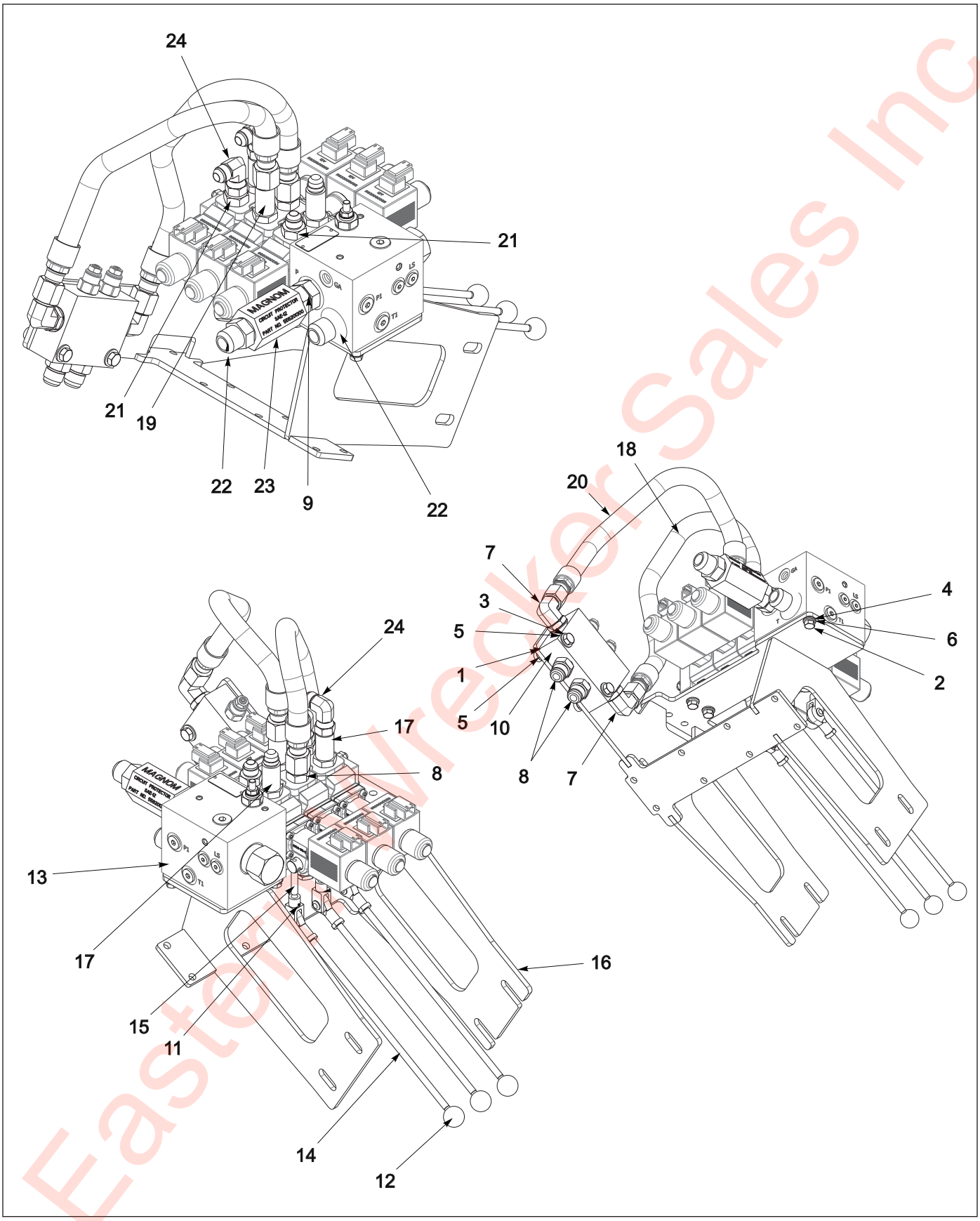

Figure 1-18: Valve Assembly - Three Spool

Eastern Wrecker Sales Inc

Valve Assembly - Three Spool

ITEM	PART NO.	DESCRIPTION	QTY.
	186886	VALVE ASSY, 3 SPOOL, 35 GPM SOLENOID	- -
1	1-512-010005-05	NUT, HEX SLFLKG, 3/8-16 UNC, GRB	2
2	1-654-010049-03	SCREW, HEX 5/16-18 UNC X 3/4 GR5	4
3	1-654-010051-10	SCREW, HEX 3/8-16 UNC X 2-1/4 GR5	2
4	1-861-010032-08	WASHER, FLAT ZP/CD, 5/16N	4
5	1-861-010032-10	WASHER, FLAT ZP/CD, 3/8N	4
6	1-861-010034-10	WASHER, LKG, HLCL SPR, 5/16	
7	124511	ADAPTER, 90 #10 O-RING TO #10 JIC	2
8	137486	ADAPTER, #10 O-RING TO #10 JIC	3
9	158581	ADAPTER ST #12 ORB - #12 ORB	1
10	184585	VALVE, DUAL COUNTERBALANCE, 30 GPM	1
11	186875	CLEVIS JOINT, ROD ENDS M8X1.25	3
12	186877	KNOB, 1 IN ROUND, M8X1.25 THD	3
13	186885	VALVE, 3 SPOOL, SOLENOID, 35 GPM	1
14	191849	HANDLE ASSY, RED KNOB	1
14	191850	HANDLE ASSY, BLACK KNOB	2
15	186902	STUD M8X1.25X65MM, DBLE THD	3
16	189256	WLDMT, CONTROL VALVE MOUNT	1
17	189285	ADAPTER STR LONG #10ORB #8MJIC	2
18	189299	HOSE ASSY 5/8X19 SAE 37 #10 STR	1
19	189301	ADAPTER STR LONG #10ORB #10MJIC	1
20	196784	HOSE ASSY 5/8X21 SAE 37 #10 STR	1
21	202702-10-8S	ADAPTER, #10 O-RING #8 TUBE	2
22	202702-12-12S	ADAPTER, #10 O-RING #12 TUBE	2
23	204124	FILTER HYD IN-LINE MAGNETIC SAE#12	1
24	2071-8-8S	ADAPTER, 90 #8 FLR SWIVEL, #8 JIC	2
25	216601	SEAL KIT **(NOT SHOWN)**	- -

Eastern Wrecker Sales Inc

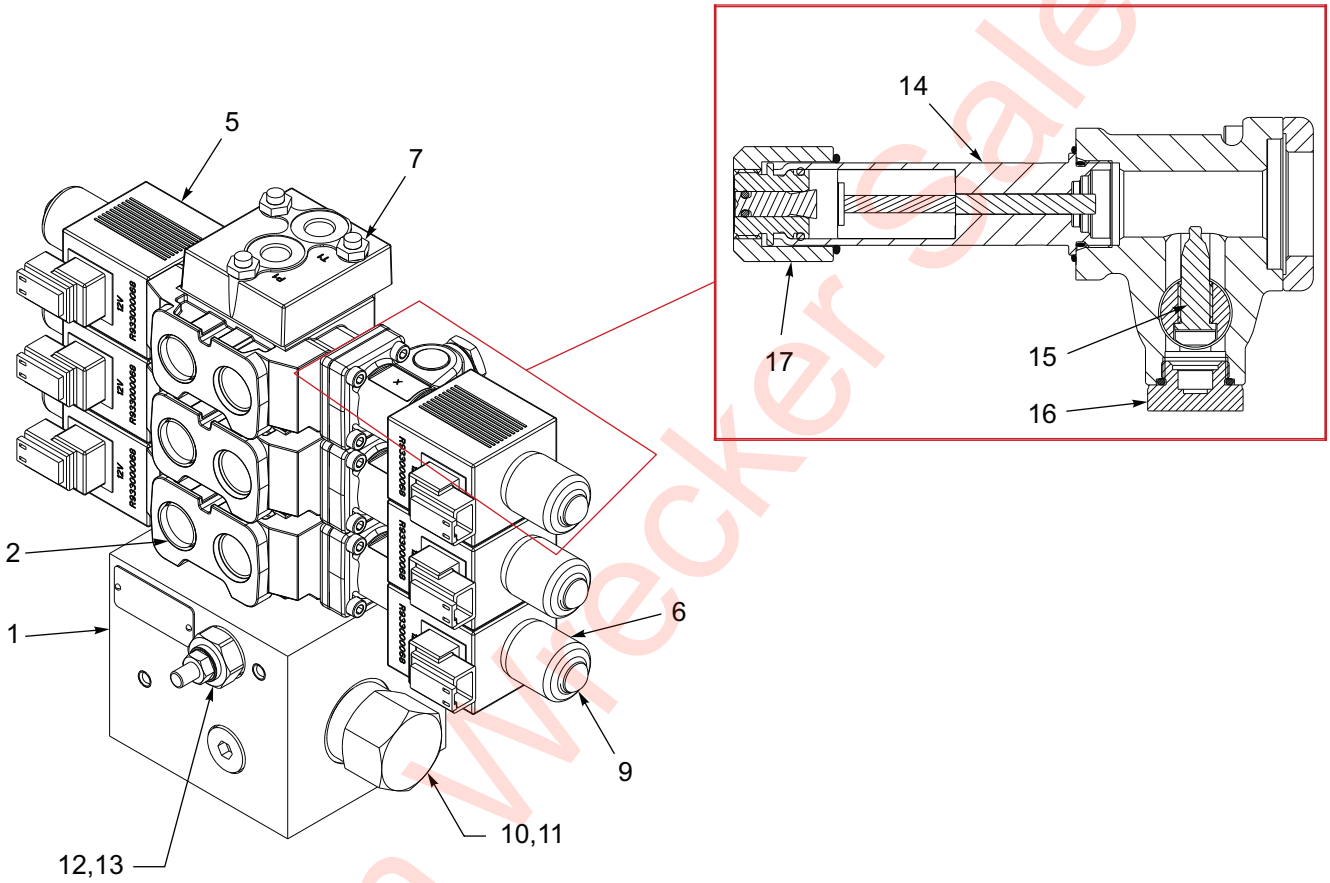

Figure 1-19: Three Spool Solenoid Valve

Eastern Wrecker Sales Inc

Three Spool Solenoid Valve

ITEM	PART NO.	DESCRIPTION	QTY.
	186885	VALVE, 3 SPOOL, SOLENOID, 35 GPM	- -
1	191847	INLET SECTION KIT	1
2	191848	VALVE SECTION KIT	3
3	191849	HANDLE ASSY **(NOT SHOWN)**	1
4	191850	HANDLE ASSY **(NOT SHOWN)**	2
5	193400	COIL	6
6	193401	RUBBER BOOT	6
7	193402	BOLT KIT	1
8	193442	VALVE SECTION SEAL KIT **(NOT SHOWN)**	4
9	193443	COIL NUT SEAL KIT	1
10	193444	BY-PASS COMENSATOR	1
11	193445	SEAL KIT FOR COMPENSATOR	1
12	193446	LOAD SENSE RELIEF	1
13	193447	LOAD SENSE RELIEF SEAL KIT	1
14	208390	KIT COMPLETE LEVER BOX, K-22144	1
15	204189	SET SCREW HANDLE ACTUATOR BALL	6
16	208391	PLUG	6
17	208392	COIL NUT LEVER BOX	6

Eastern Wrecker Sales Inc

Electrical

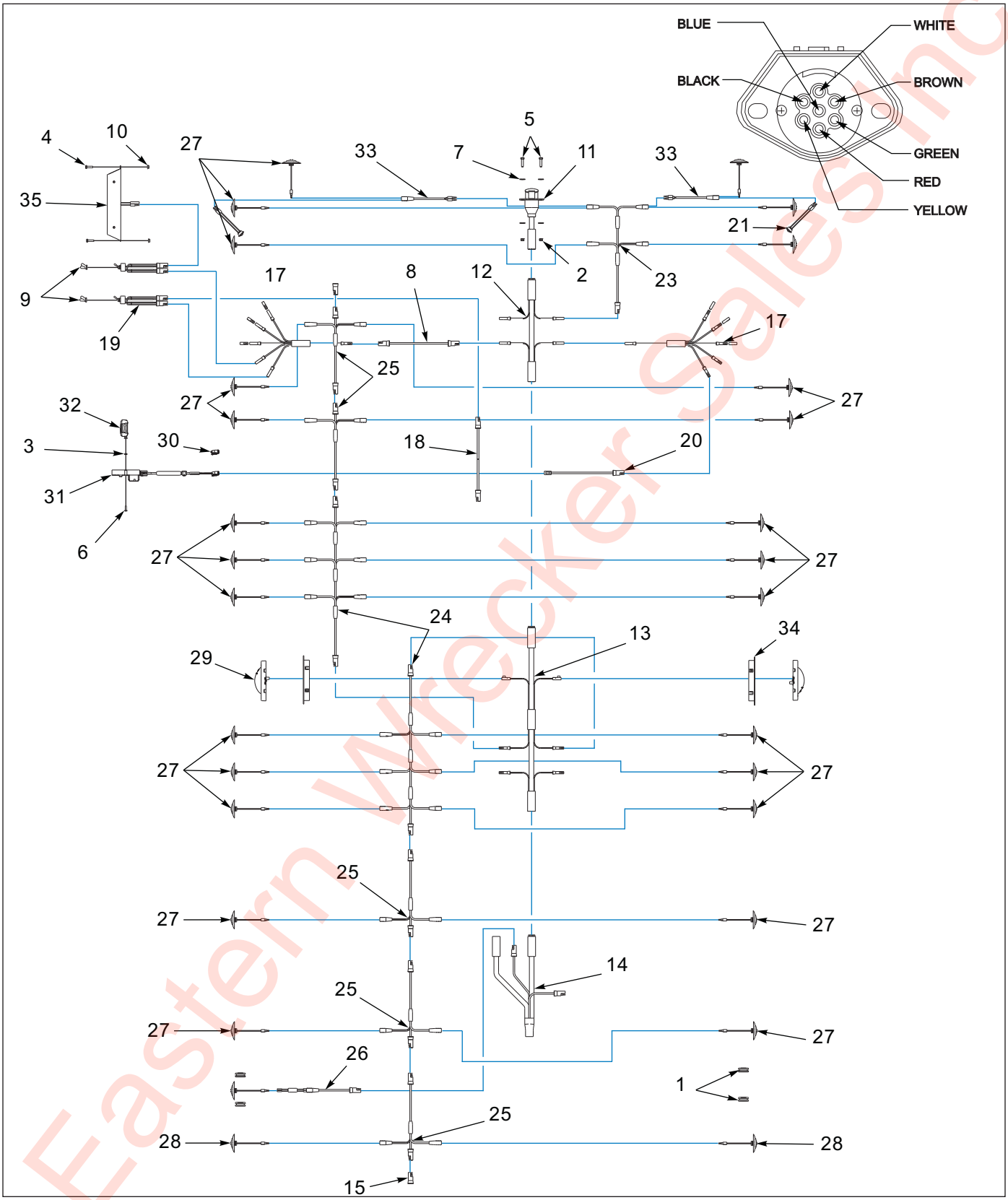

Figure 1-20: Electrical System (1 of 2)

Eastern Wrecker Sales Inc

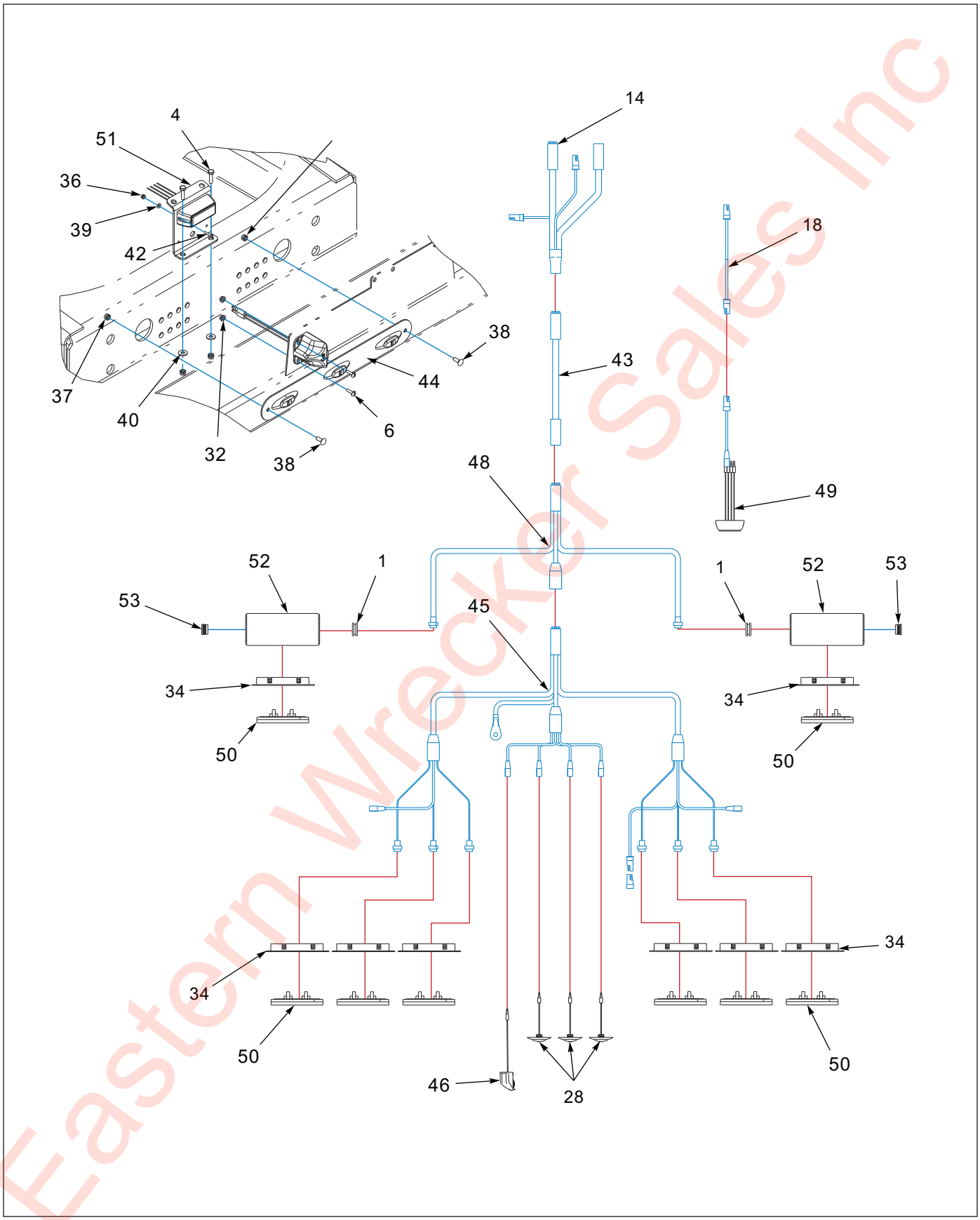

Figure 1-21: Electrical System (2 of 2)

Eastern Wrecker Sales Inc

Electrical System

ITEM	PART NO.	DESCRIPTION	QTY			
	212396	HYD ELE AIR 440B REMOTE **(REF. ONLY)**	- -			
	212397	HYD ELE AIR 440B NO REMOTE **(REF. ONLY)**		- -		
	214442	HYD ELE AIR 455B REMOTE **(REF. ONLY)**			- -	
	214443	HYD ELE AIR 455B NO REMOTE **(REF. ONLY)**				- -
1	1-343-010006	GROMMET, 7/8 ID X 1/4 GW X 1-1/4	4	4	4	4
2	1-512-010005-03	NUT, HEX SLFLKG, 5/16-18 UNC, GRB	2	2	2	2
3	1-512-010007-03	NUT, HEX #10-24 UNC, GR2	2	--	2	--
4	1-654-010047-06	SCREW,HX CP 1/4-20UNCX1 GR5 **(BEFORE 08/01/2019,2 EACH)**	- -	- -	- -	- -
4	1-654-010024055	SCREW,MACH,FLSTR,#10-24X1-1/4 **(AFTER 08/01/2019)**	2	2	2	2
5	1-654-010049-06	SCREW, HEX 5/16-18 UNC X 1-1/4 GR5	2	2	2	2
6	1-656-010003051	SCREW, RDH HD MACH, #10-24 X 3/4	4	--	4	--
7	1-861-010032-09	WASHER, FLAT ZP/CD, 5/16W	4	4	4	4
8	3-368-010252	HARNESS ASSY, BKHD LIGHT EXT	1	1	1	1
9	81264	RUBBER BOOT FOR ELECT SWITCH	2	2	2	2
10	108417	NUT SPIRAL 1/4-20HX FG **(BEFORE 08/01/2019)**	2	2	2	2
10	212074	NUT 10-24 FLANGE HD SERRATED **(AFTER 08/01/2019)**	4	4	4	4
11	143100	HARNESS, 7 WAY RECEPTACLE	1	1	1	1
12	143101	HARNESS, FRONT MAIN GROTE	1	1	1	1
13	143102	HARNESS, BED MAIN GROTE	1	1	1	1
14	143103	HARNESS, E-CHAIN GROTE	- -	- -	- -	- -
15	143121	DUMMY PLUG, MALE/FEMALE BULLET	- -	- -	- -	- -
16	143123	DIELECTRIC GREASE	- -	- -	- -	- -
17	150093	HARNESS, 5 AUX BRANCHES GROTE	2	1	2	1
18	150111	HARNESS, 300 IN. MALE/FEMALE BULLET	1	1	1	1
19	150117	TOGGLE SWITCH, SEALED, S.P.S.T	2	2	2	2
20	164052	HARNESS, 60 IN. BRANCH WORK LIGHT	1	--	1	--
21	183413	LIGHT WHT LED .75 CL/MK GROTE	2	2	2	2
22	187833	CLIP, HARNESS, CROSSMEMBER	100	100	100	100
23	187855	HARNESS MARKER, UPR DECK	1	1	1	1
24	187856	HARNESS MARKER, MID DECK	2	2	2	2
25	187857	HARNESS MARKER, ADDITION	- -	- -	- -	- -
26	187858	HARNESS, ABS LAMP MICRONOVA	1	1	1	1
27	213297	LIGHT, YEL LED,.75CL/MK CLEAR CB	- -	- -	- -	- -
28	213298	LIGHT, RED LED,.75CL/MK CLEAR CB	- -	- -	- -	- -
29	187868	LIGHT, MID TURN LED, CLEAR LENS	2	2	2	2
30	194407	PLUG ASSEMBLY, DUMMY, DEUTSCH	--	6	--	6
31	209100	REMOTE, BRAND 6 FUNCTION SLIDE **(SEE PAGE 1-37)**	1	--	1	--
32	212074	NUT, FLG HD, SERR 10-24 UNC	2	--	2	--
33	213290	HARNESS, MARKER LAMP MICRONOVA	2	2	2	2
34	213296	FLANGE CHROME FLAT OBLONG	2	2	2	2
35	213304	LIGHT ASSEMBLY, CONTROL PANEL	1	1	1	1
36	1-512-010003-02	NUT, HEX, SLFLKG W/NYL #6-32	2	2	2	2
37	1-512-010005-01	NUT, HEX, SLFLKG, 1/4-20 UNC, GRB	4	4	4	4
38	1-654-010158-1	SCREW, RDH, SQ NCK, 1/4-20X3/4	2	2	2	2
39	1-861-010032-01	WASHER, FLAT, ZP/CD, #6	2	2	2	2

Eastern Wrecker Sales Inc

Electrical System

ITEM	PART NO.	DESCRIPTION	QTY			
40	1-861-010032-07	WASHER, FLAT, ZP/CD, 1/4W	2	2	2	2
41	43029	HOSE WRAP	3	3	3	3
42	122187	SCEW, MACH, SLOT FILL, 6-32X3/4	2	2	2	2
43	143166	HARNESS EXT, 48 IN. GROTE	- -	- -	- -	- -
44	179906	PLATE, MTG MICRO ID LIGHTS	1	1	1	1
45	187859	HARNESS BUMPER MICRONOVA GROTE	1	1	1	1
46	187860	LIGHT ASSEMBLY LICENSE LED GROTE	1	1	1	1
47	203247	PLUG, PLASTIC PANEL 1-3/16 & 1-1/4	- -	- -	- -	- -
48	213287	HARNESS MUD FLAP S/T/TL LIGHTS	1	1	1	1
49	213294	STROBE ASSEMBLY LIGHT W/ 12 IN. HARNESS	1	1	1	1
50	213295	LIGHT S/T/T RED CLEAR LENS	8	8	8	8
51	213305	BRACKET U/C CENTER STROBE MTG	1	1	1	1
52	216230	MOUNT WLDMT MUD FLAP S/T/T	2	2	2	2
53	116324	PLUG PLASTIC PANEL	2	2	4	4
54	216248	GUARD HARNESS MUD FLAP S/T/T **(NOT SHOWN)**	--	--	2	2
55	1-654-010158-02	SCREW RHDSQNCK 1/4-20UNCX1 **(NOT SHOWN)**	--	--	8	8
56	216259	SPACER NYLON 3/8X7/16 **(NOT SHOWN)**	--	--	8	8

Eastern Wrecker Sales Inc

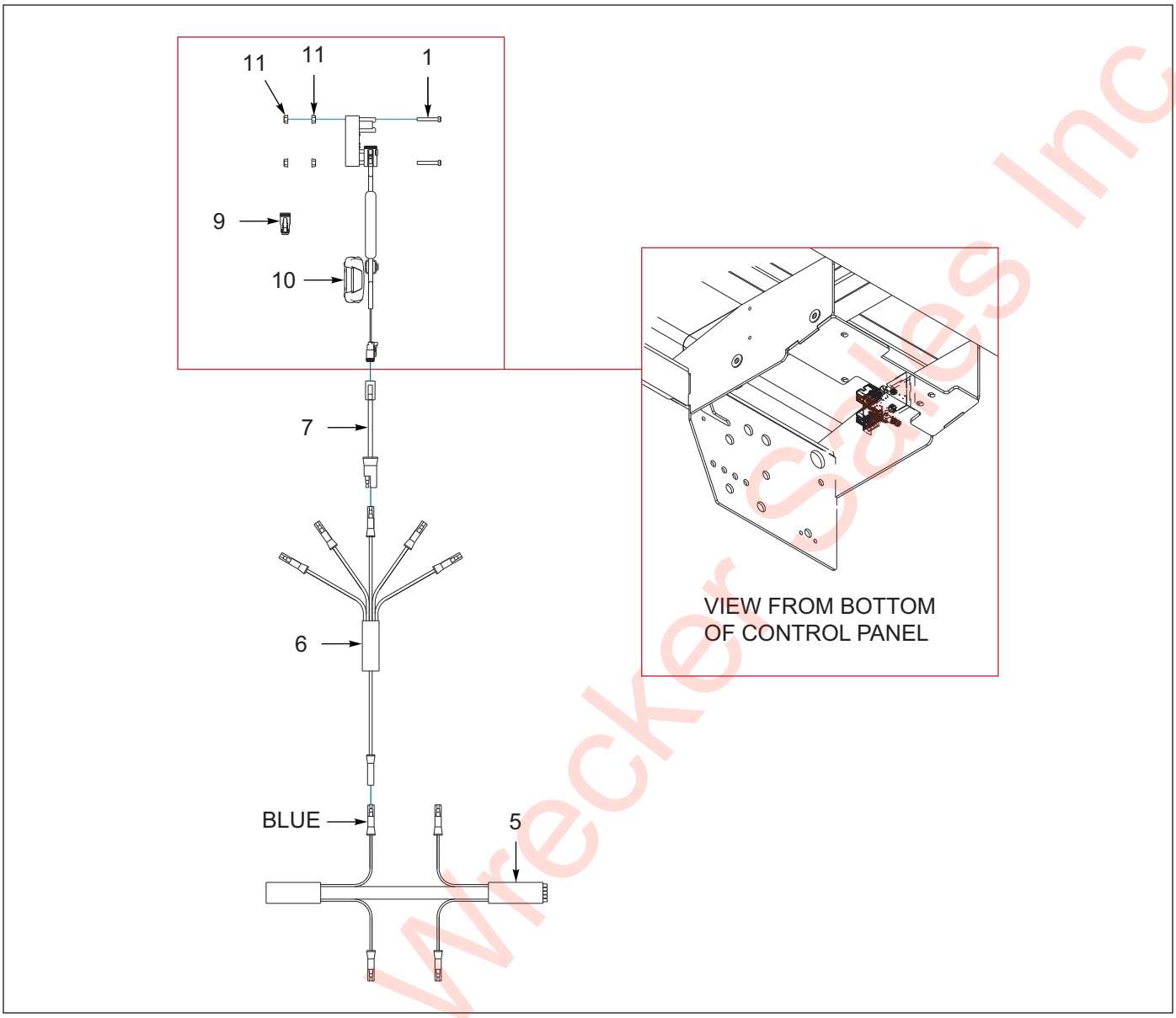

Figure 1-22: Wireless Remote Assembly, Brand (AFTER 08/01/2019)

Wireless Remote Assembly, Brand (AFTER 08/01/2019)

ITEM	PART NUMBER	DESCRIPTION	QTY
1	1-654-010024055	SCREW,MACH,FLSTR,#10-24X1-1/4	2
2	1-660-010006	SILICONE, CLEAR RTV **(NOT SHOWN)**	0.5
3	1-796-010002-01	TIE, STRAP,PLASTIC .140X5.50 **(NOT SHOWN)**	1
4	1-861-010032-04	WASHER,FLAT 3/16 ZP **(NOT SHOWN)**	4
5	143101	HARNESS FRONT MAIN GROTE	- -
6	150093	HARNESS 5 AUX BRANCHES GROTE	1
7	164052	HARNESS,60"BRANCH,WORK LIGHT	1
8	186885	VALVE, 3 SP, 35 GPM, SOLENOID	- -
9	194407	PLUG ASSY DUMMY DEUTSCH 2 PIN	- -
10	209100	REMOTE KIT BRAND 6 FUNC SLIDE	1
11	212074	NUT 10-24 FLANGE HD SERRATED	4

Eastern Wrecker Sales Inc

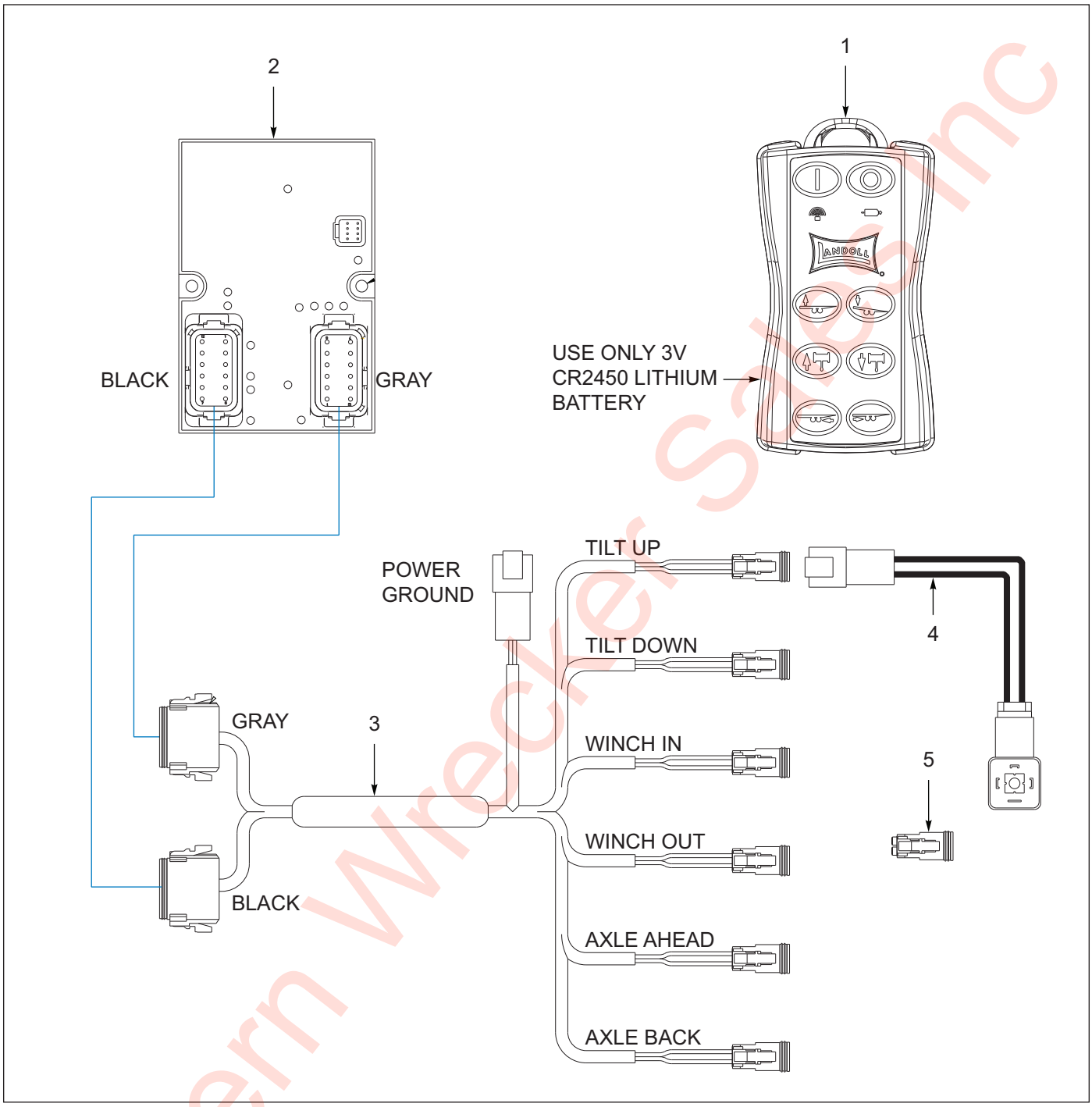

Figure 1-23: Wireless Remote Assy, Kit Components, Brand (AFTER 08/01/2019)

Wireless Remote Assy, Kit Components, Brand (AFTER 08/01/2019)

ITEM	PART NUMBER	DESCRIPTION	QTY
	209100	KIT REMOTE BRAND 6 FUNC SLIDE **(INCLUDES ITEMS 1-3)**	--
1	209101	TRANSMITTER 6 FUNC SLIDE AX	1
2	209102	RECEIVER 6 FUNC SIDE AX	1
3	209103	HARNESS RECEIVER 6 FUNC SLIDE	1
4	229494	ADAPTER DIN/2PIN DUTSCH 6IN **(NOT INCLUDED)**	6
5	194407	PLUG ASSY DUMMY DEUTSCH 2 PIN **(NOT INCLUDED)**	- -

Eastern Wrecker Sales Inc

Undercarriage

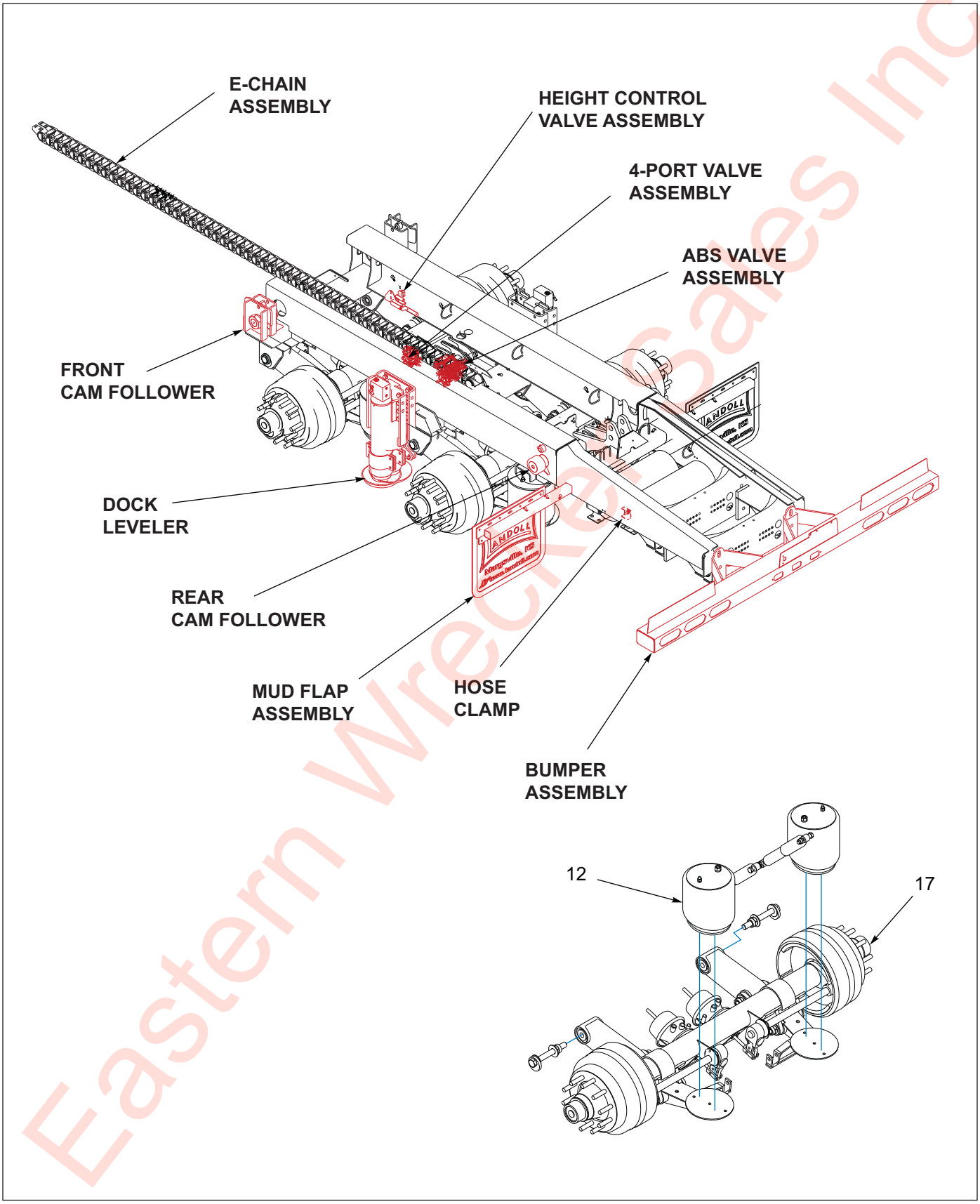

Figure 1-24: General Items - 440B (1 of 2)

Eastern Wrecker Sales Inc

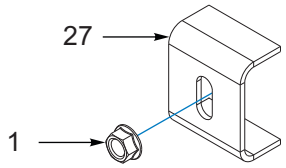

CLAMP ASSEMBLY

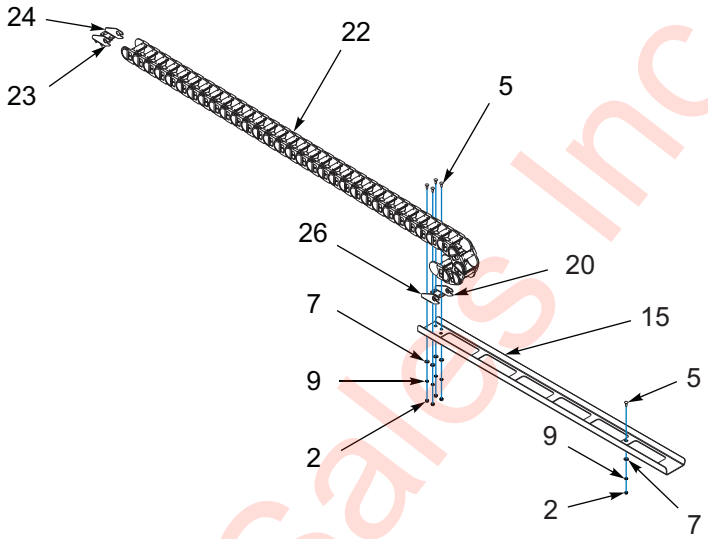

E-CHAIN ASSEMBLY

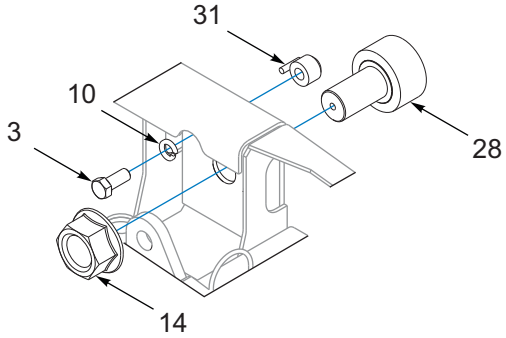

REAR CAM FOLLOWER ASSEMBLY

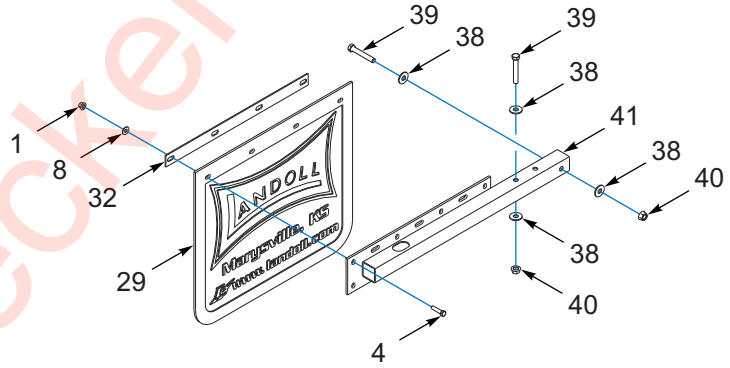

MUDFLAP ASSEMBLY

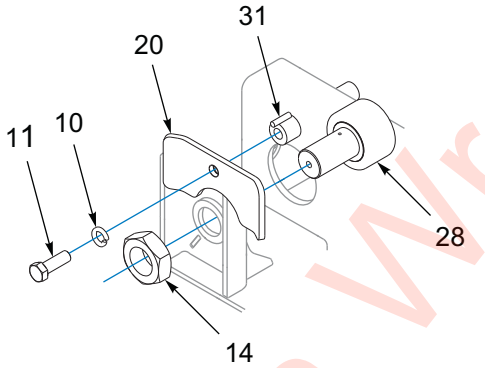

FRONT CAM FOLLOWER ASSEMBLY

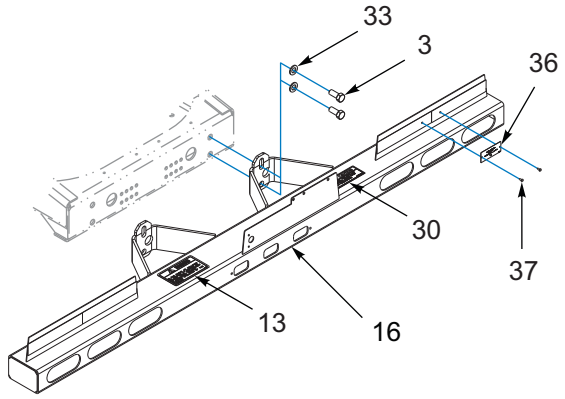

BUMPER ASSEMBLY

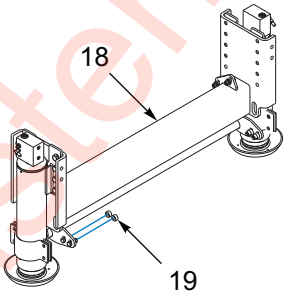

DOCK LEVELER ASSEMBLY

Eastern Wrecker Sales Inc

Figure 1-25: General Items - 440B (2 of 2)

General Items - 440B

ITEM	PART NO.	DESCRIPTION	QTY.			
	214413	SUSPENSION 440B 102 SB LED **(REF. ONLY)**	- -			
	214418	SUSPENSION 440B 108 BB 62K D/L **(REF. ONLY)**		- -		
	214422	SUSPENSION 440B-CA 102 SB LED **(REF. ONLY)**			- -	
	214425	SUSPENSION 440B-CA 102 BB 62K D/L **(REF. ONLY)**				- -
1	1-510-010001	NUT, FLANGE LOCK 3/8-16	9	9	9	9
2	1-512-010007-05	NUT, HEX 1/4-20 GRB	10	10	10	10
3	1-654-010032-4	SCREW, HEX HEAD CAP 3/4-10 X 1-3/4 GR8	6	6	6	6
4	1-654-010051-07	SCREW, HEX 3/8-16 X 1-1/2 GR5	8	8	8	8
5	1-654-010158-1	SCREW, RDH SQ NEK, 1/4-20 X 3/4	10	10	10	10
6	1-843-010014	VALVE EXTENSION, STEM **(NOT SHOWN)**	4	4	4	4
7	1-861-010032-07	WASHER, FLAT 1/4W	12	12	12	12
8	1-861-010032-11	WASHER, FLAT 3/8W	8	8	8	8
9	1-861-010034-09	WASHER, SPLIT LOCK 1/4	10	10	10	10
10	1-861-010034-17	WASHER, SPLIT LOCK 3/4	4	4	4	4
11	100941	SCREW, HEX HEAD CAP 3/4-10 X 2-1/4 GR8	2	2	2	2
12	102363	SUSP ADJ RLU-228-3.5 **(SEE PAGE 1-67)**	2	2	2	2
13	103056	DECAL, ENERGY BUMPER WARNING (**SEE PAGE 1-4**)	1	1	1	1
14	104034	NUT, HEX 2-12 UNF, GR2	4	4	4	4
15	118897	TRAY, E-CHAIN	1	1	1	1
16	119580	BUMPER WELDMENT 660 TUBE WE/P	1	1	1	1
17	121077	AXLE WELDMENT, 2512 SPG 70.5 X 36	2	2	2	2
18	121498	DOCK LEVELER ASSEMBLY **(SEE PAGE 1-160)**	--	--	1	1
19	124559	SPACER, D/L MOUNT	--	--	4	4
20	140829	PLATE, WEAR 435 U/C	2	2	2	2
21	130556	UNDERCARRIAGE WLDMT, 425/435	1	--	1	--
21	130794	UNDERCARRIAGE WLDMT, 435-50CA	--	1	--	1
22	189318	SUPPORT E-CHAIN, 58 LINKS, 3838	1	1	1	1
23	190700ZP	BRACKET, E-CHAIN LH	1	1	1	1
24	190705ZP	BRACKET, E-CHAIN RH	1	1	1	1
25	190701	BRACKET WLDMT, E-CHAIN LH	1	1	1	1
26	190706	BRACKET WLDMT, E-CHAIN RH	1	1	1	1
27	2-181-010001	CLAMP	1	1	1	1
28	3-076-010005	CAM FOLLOWER, 4" DIA	4	4	4	4
29	3-485-010001	MUD FLAP, 21"	2	2	2	2
30	3-573-010031	DECAL, BUMPER **(SEE PAGE 1-4)**	1	1	1	1
31	3-762-010016	HOLD DOWN, U/C	4	4	4	4
32	3-762-010017	CLAMP, MUD FLAP	2	2	2	2
33	622-3511-008	WASHER, FLAT 3/4 MIL-CARB, FL SAE	4	4	4	4
34	213299	MOUNT WLDMT MUD FLAP S/T/T LIGHT	2	2	2	2
35	213333	PLUG CAP END **(INSTALLED ON AXLES WITHOUT TIRE INFLATION OPTION)**	- -	- -	- -	- -
36	103055	PLACARD, ENERGY BUMPER CERT	1	1	1	1
37	184138	RIVET, BLIND .187 X 3/16 GRIP	2	2	2	2
38	1-861-010032-15	WASHER, FLAT 1/2 W ZP/CD **(AFTER 11/01/2019)**	8	8	8	8
39	201496	SCREW,HX CAP, 1/2-13X3.25 GR8 **(AFTER 11/01/2019)**	4	4	4	4
40	223247	NUT, 1/2-13 UNC FLG LOCK GR G **(AFTER 11/01/2019)**	4	4	4	4

Eastern Dock Sales Inc

General Items - 440B

ITEM	PART NO.	DESCRIPTION	QTY.			
41	223252	M FLAP EXT WLDMT DRV GALV **(RT & LT BOLT ON) (AFTER 11/01/2019 - BEFORE 07/21/2020) (MOUNT WELDED ON BEFORE 11/01/2019)**	2	2	2	2
41	223254	M FLAP WLDMT DRV 102 GALV **(RT & LT BOLT ON) (AFTER 07/21/2020)**	2	2	2	2

Table provided for general use.

Eastern Wrecker Sales Inc

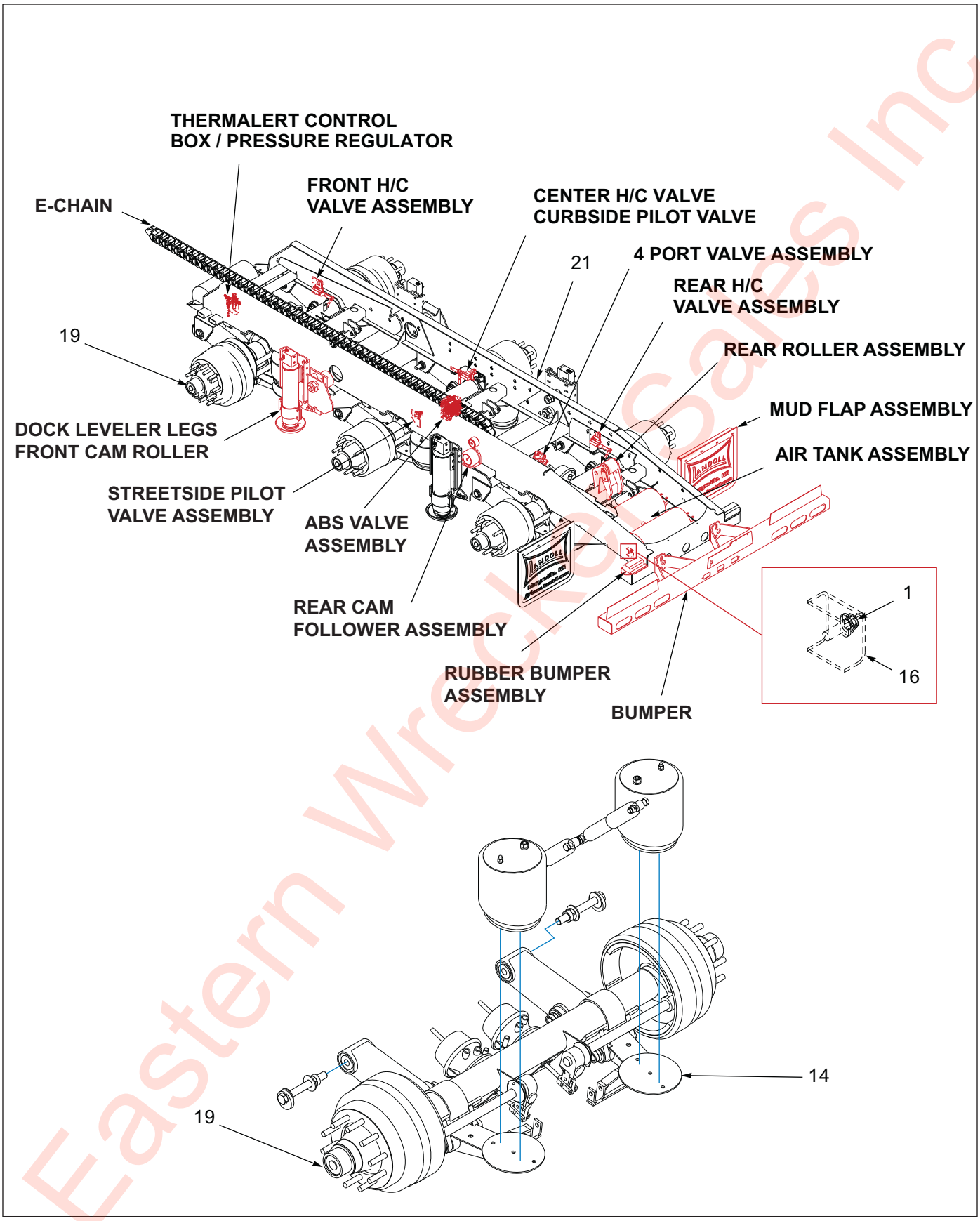

Figure 1-26: General Items - 455B (1 of 2)

Eastern Wrecker Sales Inc

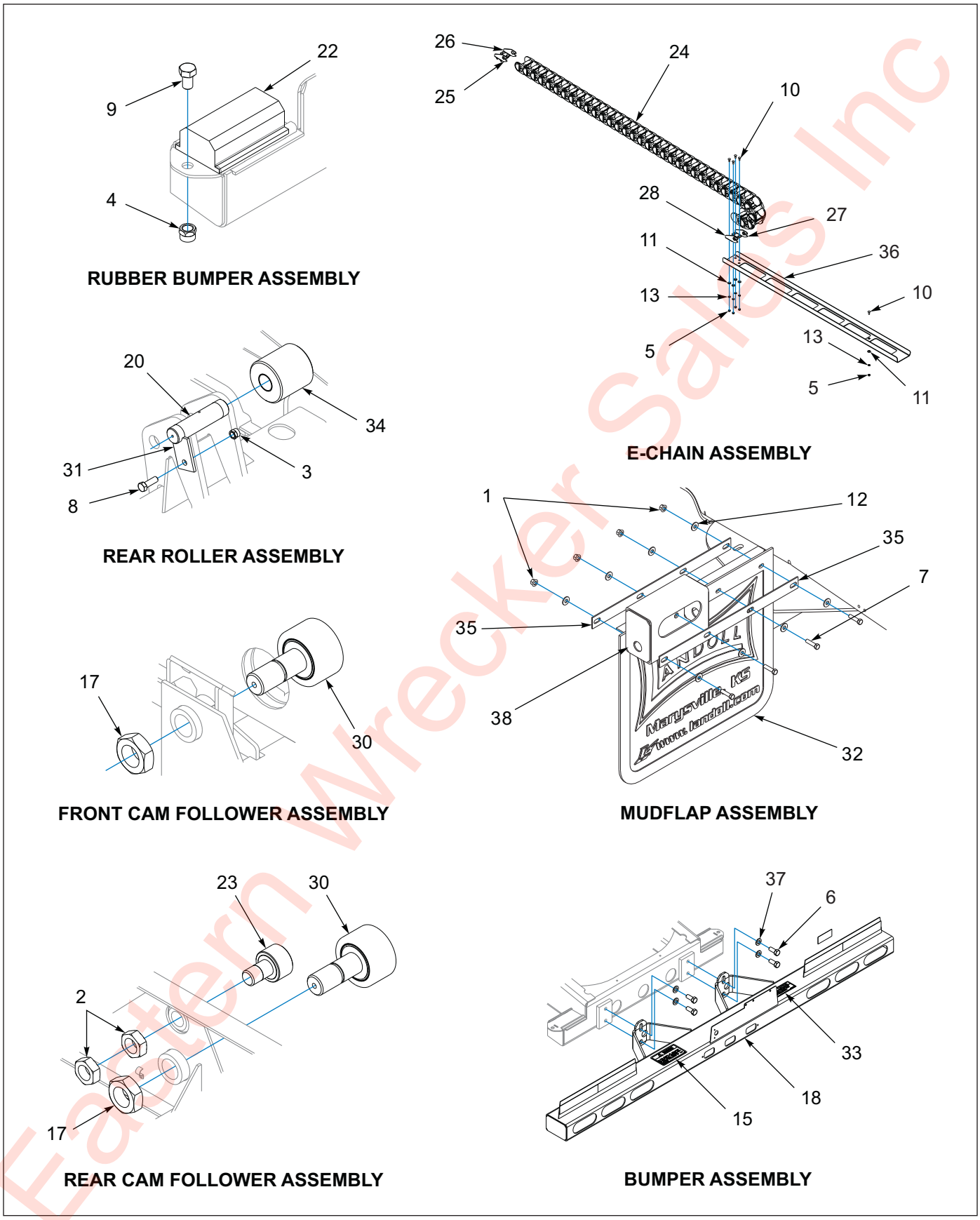

Figure 1-27: General Items - 455B (2 of 2)

Eastern Wrecker Sales Inc

General Items - 455B

ITEM	PART NO.	DESCRIPTION	QTY.		
	214468	SUSPENSION 455B STD 102 SB **(REF. ONLY)**	- -		
	214478	SUSPENSION 455B-CA 102 SB 62K D/L **(REF. ONLY)**		- -	
	214482	SUSPENSION 455B-CA 108 BB 62K D/L **(REF. ONLY)**			- -
1	1-510-010001	NUT, FLANGE LOCK 3/8-16	11	11	11
2	1-511-010001-14	NUT, HEX JAM, 1-1/2-12	4	4	4
3	1-512-010005-09	NUT, HEX SLFLKG, 1/2-13 UNC, GRB	1	1	1
4	1-512-010005-13	NUT, HEX SLFLKG, 5/8-11 UNC, GRB	2	2	2
5	1-512-010007-05	NUT, HEX 1/4-20 UNC, GR2	11	11	11
6	1-654-010032-4	SCREW, HEX HEAD CAP 3/4-10 X 1-3/4 GR8	4	4	4
7	1-654-010051-07	SCREW, HEX 3/8-16 X 1-1/2 GR5	8	8	8
8	1-654-010055-03	SCREW, HEX 1/2-13 UNC X 1-1/2 GR5	1	1	1
9	1-654-010059-01	SCERW, HEX 5/8-11 UNC X 1 GR5	2	2	2
10	1-654-010158-1	SCREW, RDH SQ NEK, 1/4-20 X 3/4	11	11	11
11	1-861-010032-07	WASHER, FLAT 1/4W	11	11	11
12	1-861-010032-11	WASHER, FLAT 3/8W	8	8	16
13	1-861-010034-09	WASHER, SPLIT LOCK 1/4	11	11	11
14	102363	SUSP ADJ RLU-228-3.5 **(SEE PAGE 1-60)**	3	3	--
15	103056	DECAL, ENERGY BUMPER WARNING **(SEE PAGE 1-4)**	1	1	1
16	103817	CLAMP, HOSE 660 U/C	1	1	1
17	104034	NUT, HEX 2-12 UNF, GR2	4	4	4
18	119580	BUMPER WELDMENT 660 TUBE WE/P	1	1	1
19	121077	AXLE WELDMENT, 2512 SPG 70.5 X 36	3	3	--
20	121686	PIN, 1-1/2 X 6-1/4	1	1	1
21	128670	SUSPENSION, WLDMT US410	1	--	--
21	171942	SUSPENSION, WLDMT 455-50CA	--	1	--
21	176072	SUSPENSION, WLDMT 455-108” DSK BK	--	--	1
22	142565	PLATE, RUB BUMPER, 2”	2	2	2
23	145532	CAM FOLLWER, 3” SEALED	2	2	2
24	189318	SUPPORT E-CHAIN, 58 LINKS, 3838	1	1	1
25	190700ZP	BRACKET, E-CHAIN LH	1	1	1
26	190705ZP	BRACKET, E-CHAIN RH	1	1	1
27	190701	BRACKET WLDMT, E-CHAIN LH	1	1	1
28	190706	BRACKET WLDMT, E-CHAIN RH	1	1	1
29	2-181-010001	CLAMP	2	2	2
30	3-076-010015	CAM FOLLOWER, 5" DIA	4	4	4
31	3-187-010013	CLIP, PIN RETAINER	1	1	1
32	3-485-010001	MUD FLAP, 21"	2	2	2
33	3-573-010031	DECAL, BUMPER **(SEE PAGE 1-4)**	1	1	1
34	3-645-010084	ROLLER ASSY, REAR U/C 660FG	1	1	1
35	3-762-010017	CLAMP, MUD FLAP	2	2	4
36	3-821-010005	TRAY, CAT TRACK	1	1	1
37	622-3511-008	WASHER, FLAT 3/4 MIL-CARB, FL SAE	4	4	4
38	213299	MOUNT, WLDMT, MUD FLAP, S/T/T LIGHT	2	2	2
39	213333	**(INSTALLED ON AXLES WITHOUT TIRE INFLATION OPTION)**	- -	- -	- -

Eastern Wholesale Sales Inc

Table provided for general use.

NOTES:

Eastern Wrecker Sales Inc

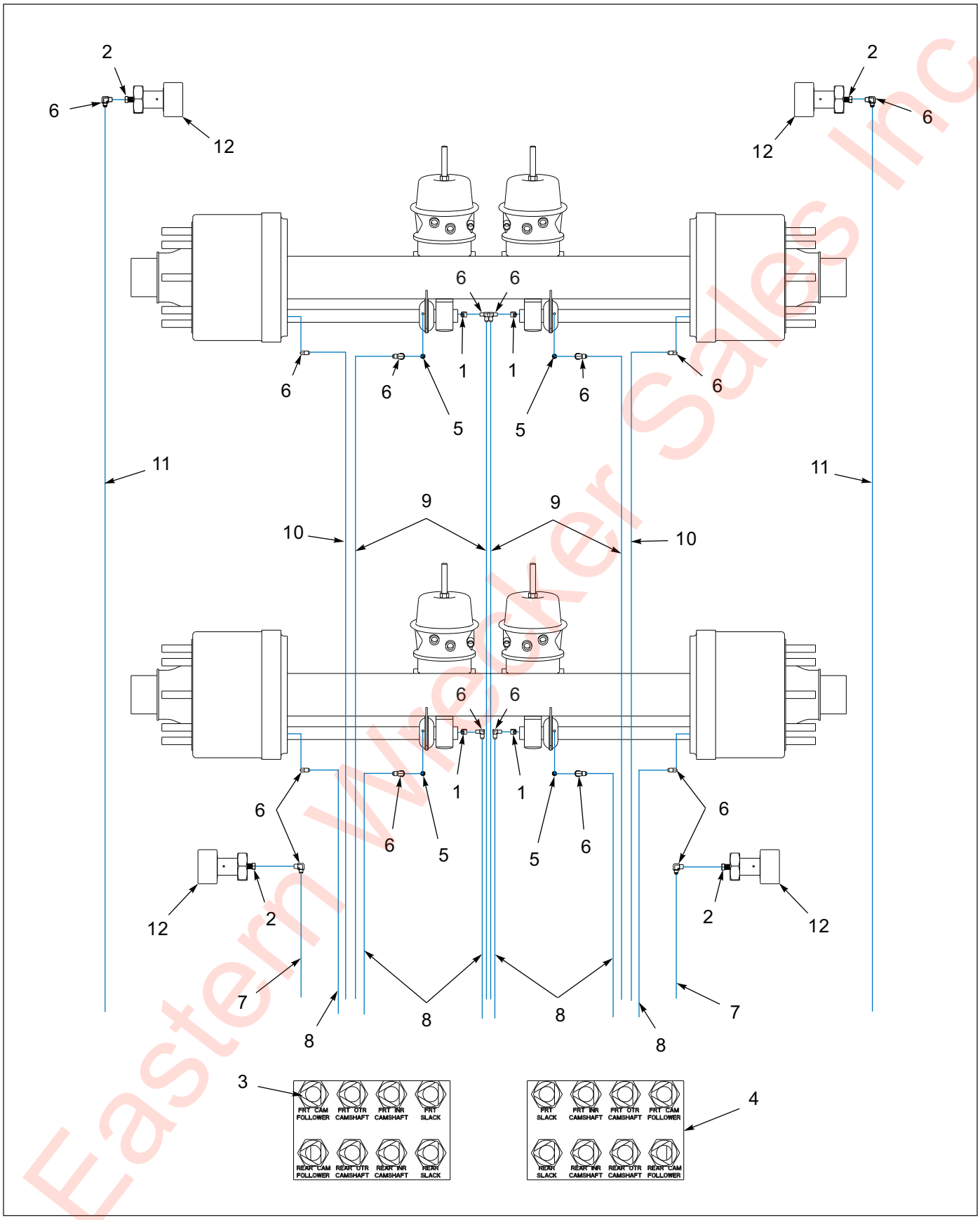

Figure 1-28: Grease System, 2 Axle (Before 11/07/2018)

Eastern Wrecker Sales Inc

Grease System, 2 Axle (Before 11/07/2018)

ITEM	PART NUMBER	DESCRIPTION	QTY
	214413	SUSP 440B 102 2512-70.5 GROTE	- -
	214418	SUSP 440B 108 2516-75 60K	- -
	214422	SUSP 440B CA 102 2512-70.5 **(CA)**	- -
	214425	SUSP 440B-CA-102BB D/L **(CA)**	- -
1	101528	ELBOW,BRASS PIPE STREET	4
2	118-2659-1	BUSHING 1/4 X 1/8 NPT STL	4
3	142545	NUT 7/16 FOR BULKHEAD	16
4	142553	DECAL, GREASE TRL U/C	2
5	202094	ADAPTER 5/16--18X1/8NPT(F)	4
6	202099	FITTING GREASE 90 SWIV PTC 1/8	16
7	202103	HOSE ASSY GREASE 1/8 X 45	2
7	202104	HOSE ASSY GREASE 1/8 X 60 **(CA)**	2
8	202106	HOSE ASSY GREASE 1/8 X 72	6
8	202108	HOSE ASSY GREASE 1/8 X 88 **(CA)**	6
9	202112	HOSE ASSY GREASE 1/8 X 118	4
9	202114	HOSE ASSY GREASE 1/8 X 133 **(CA)**	4
10	202113	HOSE ASSY GREASE 1/8 X 126	2
10	202116	HOSE ASSY GREASE 1/8 X 144 **(CA)**	2
11	202118	HOSE ASSY GREASE 1/8 X 156	2
11	202121	HOSE ASSY GREASE 1/8 X 172 **(CA)**	2
12	3-076-010005	CAM FOLLOWER 4 IN DIA	4

Eastern Wrecker Sales Inc

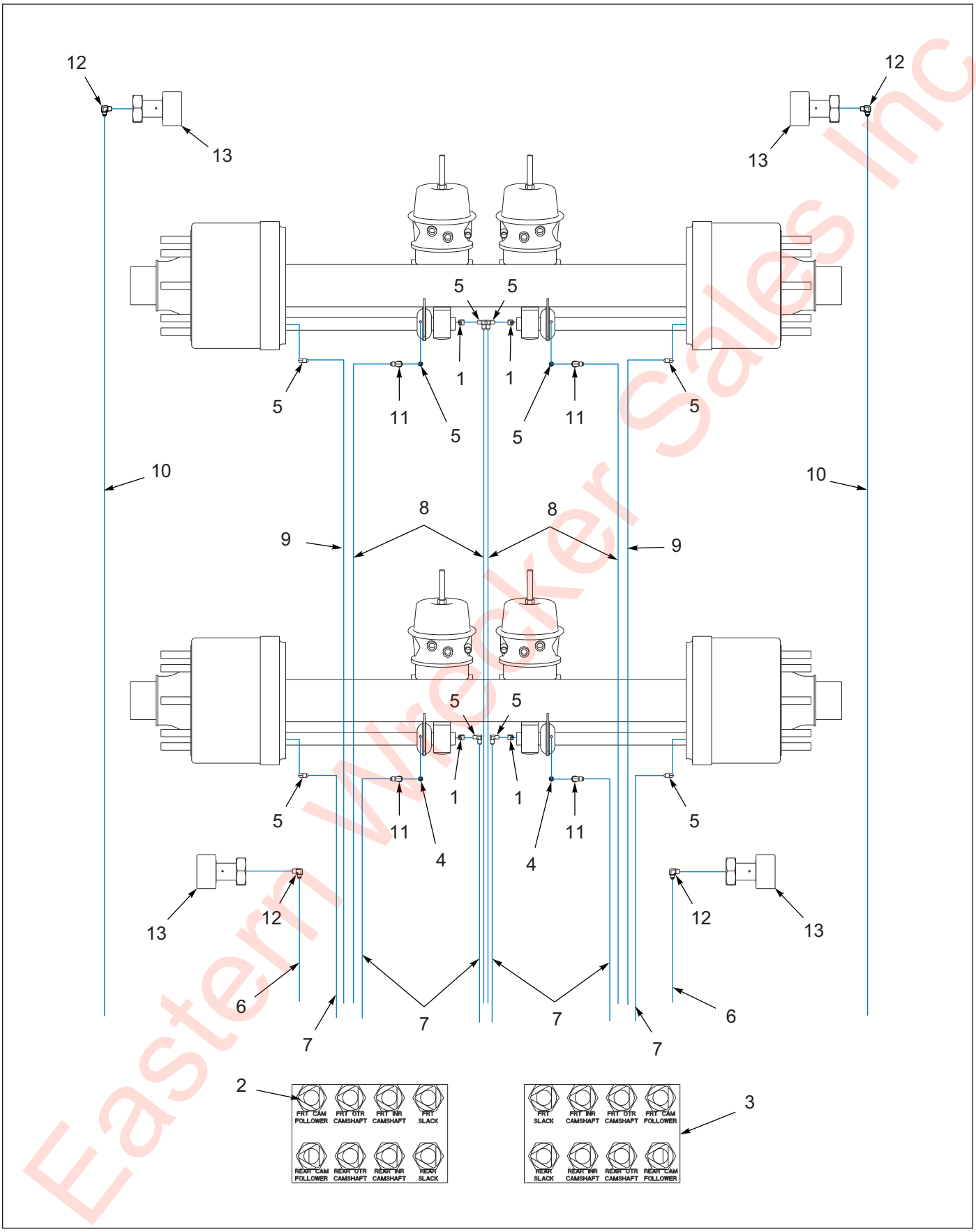

Eastern Wrecker Sales Inc

Figure 1-29: Grease System, 2 Axle (After 11/07/2018 - Before 08/31/2020)

Grease System, 2 Axle (After 11/07/2018 - Before 08/31/2020)

ITEM	PART NUMBER	DESCRIPTION	QTY
	214413	SUSP 440B 102 2512-70.5 GROTE	- -
	214418	SUSP 440B 108 2516-75 60K	- -
	214422	SUSP 440B CA 102 2512-70.5 **(CA)**	- -
	214425	SUSP 440B-CA-102BB D/L **(CA)**	- -
1	101528	ELBOW,BRASS PIPE STREET	4
2	142545	NUT 7/16 FOR BULKHEAD	16
3	142553	DECAL, GREASE TRL U/C	2
4	202094	ADAPTER 5/16--18X1/8NPT(F)	4
5	202099	FITTING GREASE 90 SWIV PTC 1/8	8
6	202103	HOSE ASSY GREASE 1/8 X 45	2
6	202104	HOSE ASSY GREASE 1/8 X 60 **(CA)**	2
7	202106	HOSE ASSY GREASE 1/8 X 72	6
7	202108	HOSE ASSY GREASE 1/8 X 88 **(CA)**	6
8	202112	HOSE ASSY GREASE 1/8 X 118	4
8	202114	HOSE ASSY GREASE 1/8 X 133 **(CA)**	4
9	202113	HOSE ASSY GREASE 1/8 X 126	2
9	202116	HOSE ASSY GREASE 1/8 X 144 **(CA)**	2
10	202118	HOSE ASSY GREASE 1/8 X 156	2
10	202121	HOSE ASSY GREASE 1/8 X 172 **(CA)**	2
11	216599	FITTING,GREASE 1/4 TUBE X 1/8	4
12	216600	FITTING GREAST 90SWIV P-T-C1/4	4
13	3-076-010005	CAM FOLLOWER 4 IN DIA	4

Eastern Wrecker Sales Inc

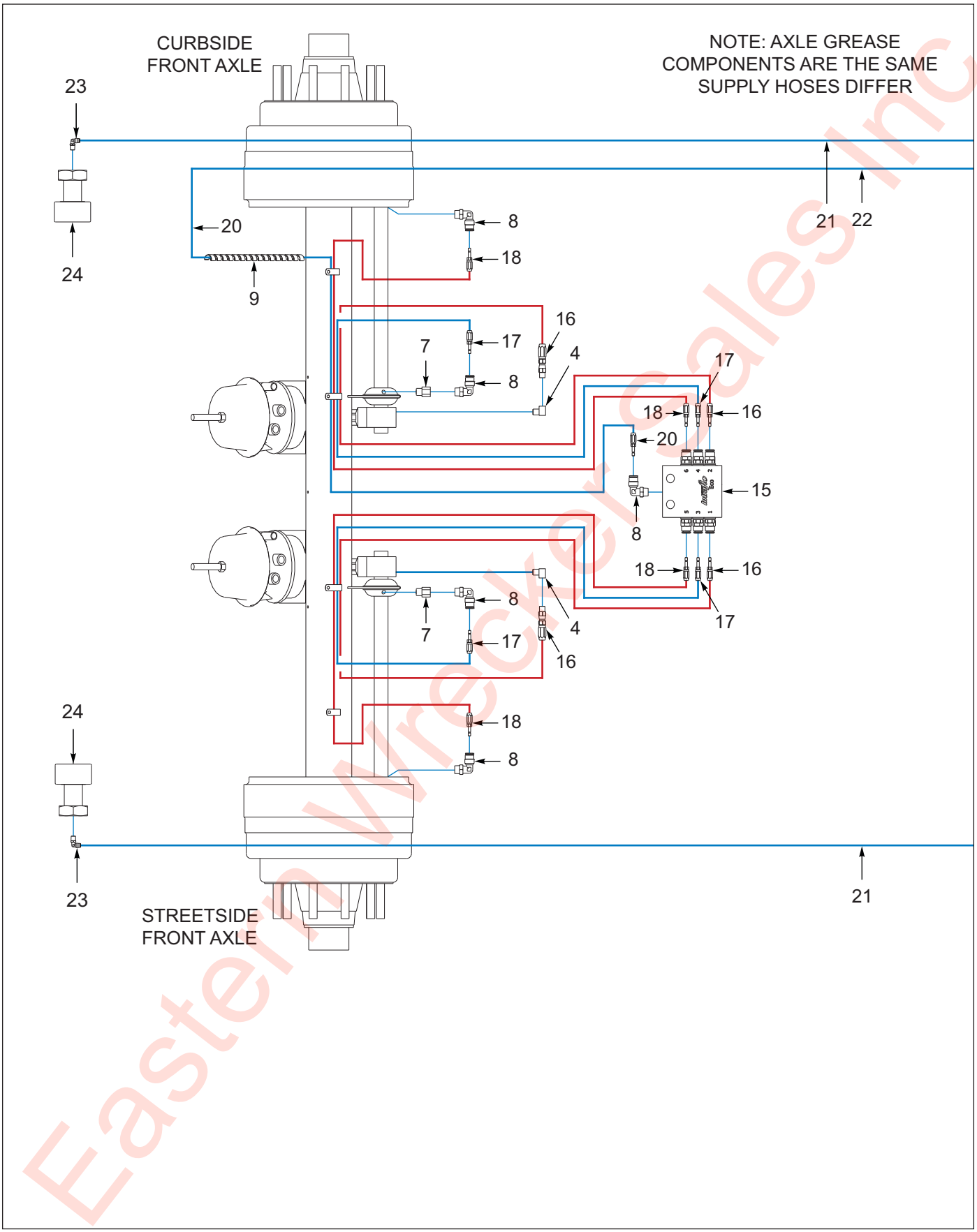

Figure 1-30: Grease System, 2 Axle (After 08/31/2020) (1 of 3)

Eastern Wrecker Sales Inc

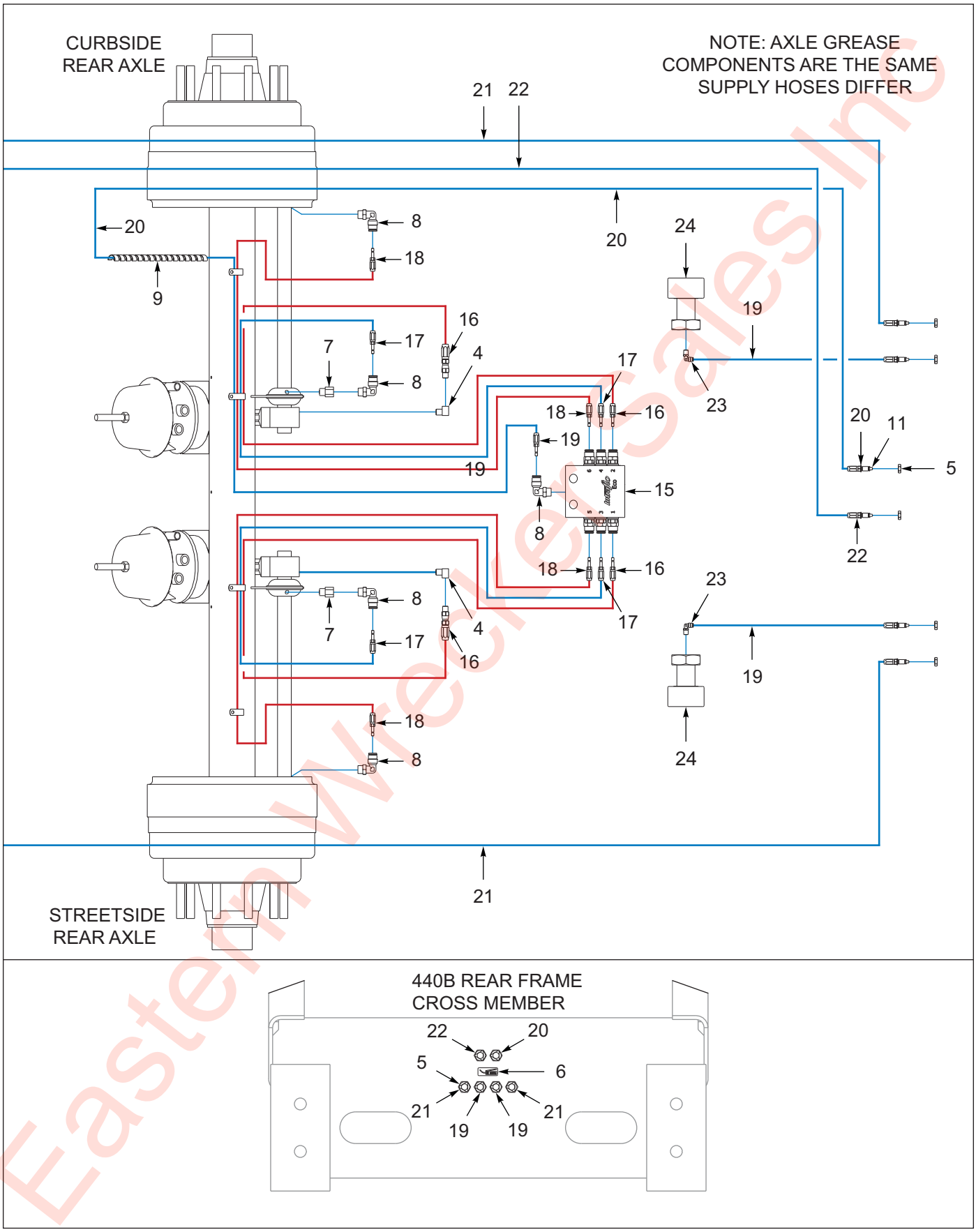

Figure 1-31: Grease System, 2 Axle (After 08/31/2020) (2 of 3)

Eastern Wrecker Sales Inc

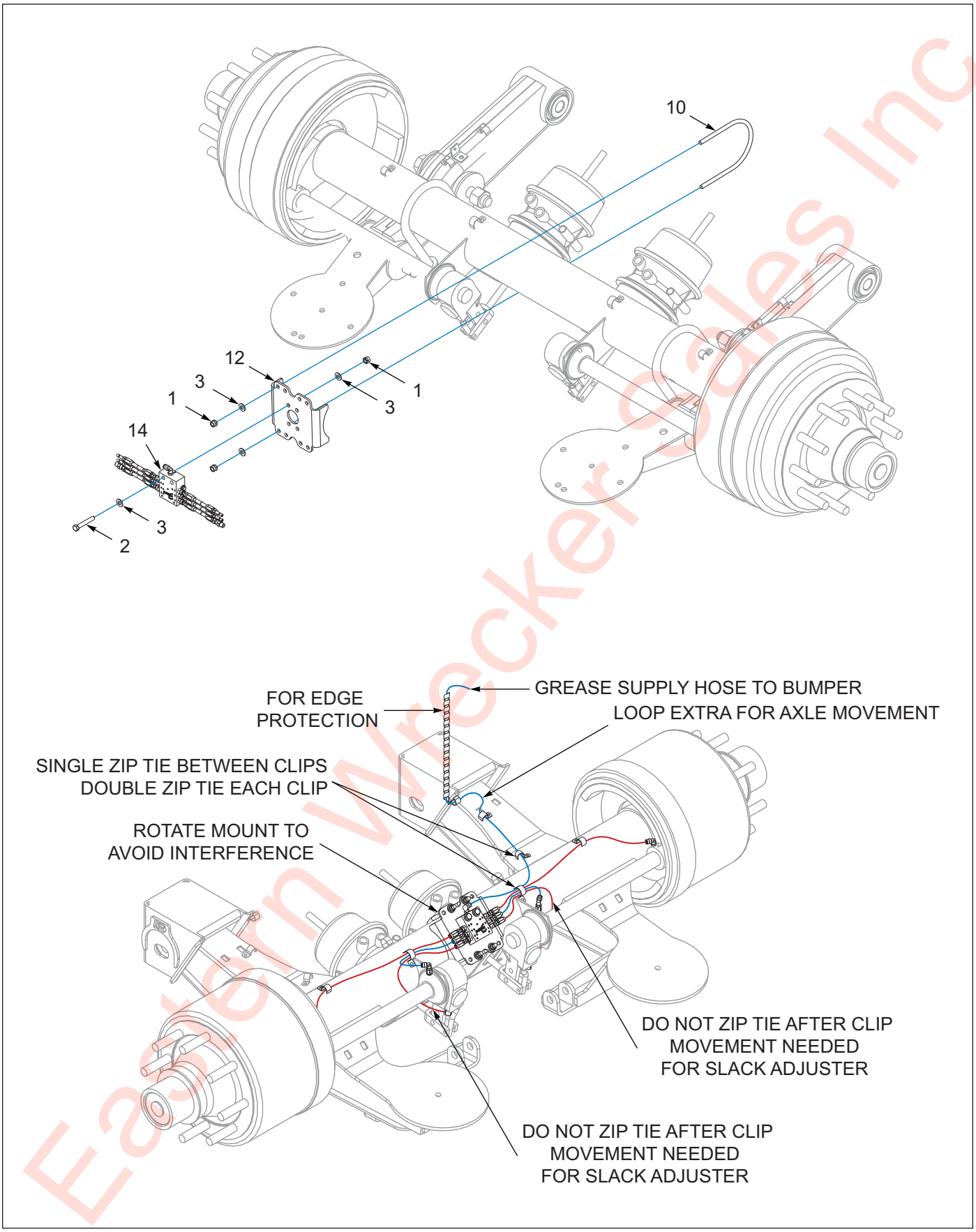

Eastern Wrecker Sales Inc

Figure 1-32: Grease System, 2 Axle (After 08/31/2020) (3 of 3)

Grease System, 2 Axle (After 08/31/2020)

ITEM	PART NUMBER	DESCRIPTION	QTY
	214413	SUSP 440B 102 2512-70.5 GROTE	- -
	214417	SUSP 440B108 2516-75	- -
	214422	SUSP 440B CA 102 2512-70.5 **(CA)**	- -
	214425	SUSP 440B-CA-102BB D/L **(CA)**	- -
	215487	SUSP 440B-102 SB GRT AQUA PKG	- -
	217167	SUSP 440B 120 SB	- -
1	1-512-010005-05	NUT, HEX, SLFLKG GRB 3/8-16 **(QTY PER AXLE)**	6
2	1-654-010051-10	SCREW,HX CP3/8-16X2-1/4 GR5 **(QTY PER AXLE)**	2
3	1-861-010032-10	WASHER, FLAT 3/8" N ZP/CD **(QTY PER AXLE)**	8
4	101528	ELBOW,BRASS PIPE STREET **(QTY PER AXLE)**	2
5	142545	NUT 7/16 FOR BULKHEAD **(QTY PER AXLE, 1 EACH)**	6
6	2-573-010330-04	DECAL LUBRICATION, SEE MANUAL	1
7	202094	ADAPTER 5/16--18X1/8NPT(F) **(QTY PER AXLE)**	2
8	202099	FITTING GREASE 90 SWIV PTC 1/8 **(QTY PER AXLE)** **(KIT 14, VALVE INCLUDES 1 EACH)**	4
9	212785	SPIRAL LOOM, 1/2" BLACK **(BY THE FOOT) (1 FOOT PER AXLE)**	- -
10	222479	U-BOLT 3/8-16X5X6-3/4X2" T ZP **(QTY PER AXLE)**	2
11	224304	ZERK FITTING 1/4 SAE **(PART OF ITEMS 19-23, INCLUDES 1 EACH)**	- -
12	224325	MOUNT BOLT-ON AXLE GREASE VLV **(QTY PER AXLE)**	1
13	1-796-010003-01	TIE, STRAP, PLASTIC .184X7.31 **(BY THE LB) (NOT SHOWN)**	- -
14	229177	VALVE AXLE GREASE ASM 22-16-28 **(QTY PER AXLE) (KIT INCLUDES ITEMS 8, 15-18)**	1
15	224304	VALVE AXLE GREASE DIVIDER	1
16	225770	HOSE ASSY GREAST 1/8" X 22" **(PORTS 1 & 2)**	2
17	229178	HOSE ASSY GREASE 1/8" X 16" **(PORTS 3 & 4)**	2
18	229182	HOSE ASSY GREASE 1/8" X 28" **(PORTS 5 & 6)**	2
19	202104	HOSE ASSY GREASE 1/8 X 60 **(INCLUDES ITEM 11, 1 EACH)**	2
19	202106	HOSE ASSY GREASE 1/8 X 72 **(CA ONLY)** **(INCLUDES ITEM 11, 1 EACH)**	2
20	202114	HOSE ASSY GREASE 1/8 X 133 **(INCLUDES ITEM 11, 1 EACH)**	1
20	202117	HOSE ASSY GREASE 1/8 X 150 **(CA ONLY)** **(INCLUDES ITEM 11, 1 EACH)**	1
21	202121	HOSE ASSY GREASE 1/8 X 172 **(INCLUDES ITEM 11, 1 EACH)**	2
21	202123	HOSE ASSY GREASE 1/8 X 186 **(CA ONLY)** **(INCLUDES ITEM 11, 1 EACH)**	2
22	202122	HOSE ASSY GREASE 1/8 X 180 **(INCLUDES ITEM 11, 1 EACH)**	1
22	204223	HOSE ASSY GREASE 1/8 X 200 **(CA ONLY)** **(INCLUDES ITEM 11, 1 EACH)**	1
23	216600	FITTING GREAST 90SWIV P-T-C1/4	4
24	3-076-010005	CAM FOLLOWER 4 IN DIA	4

Eastern Truck & Sales Inc

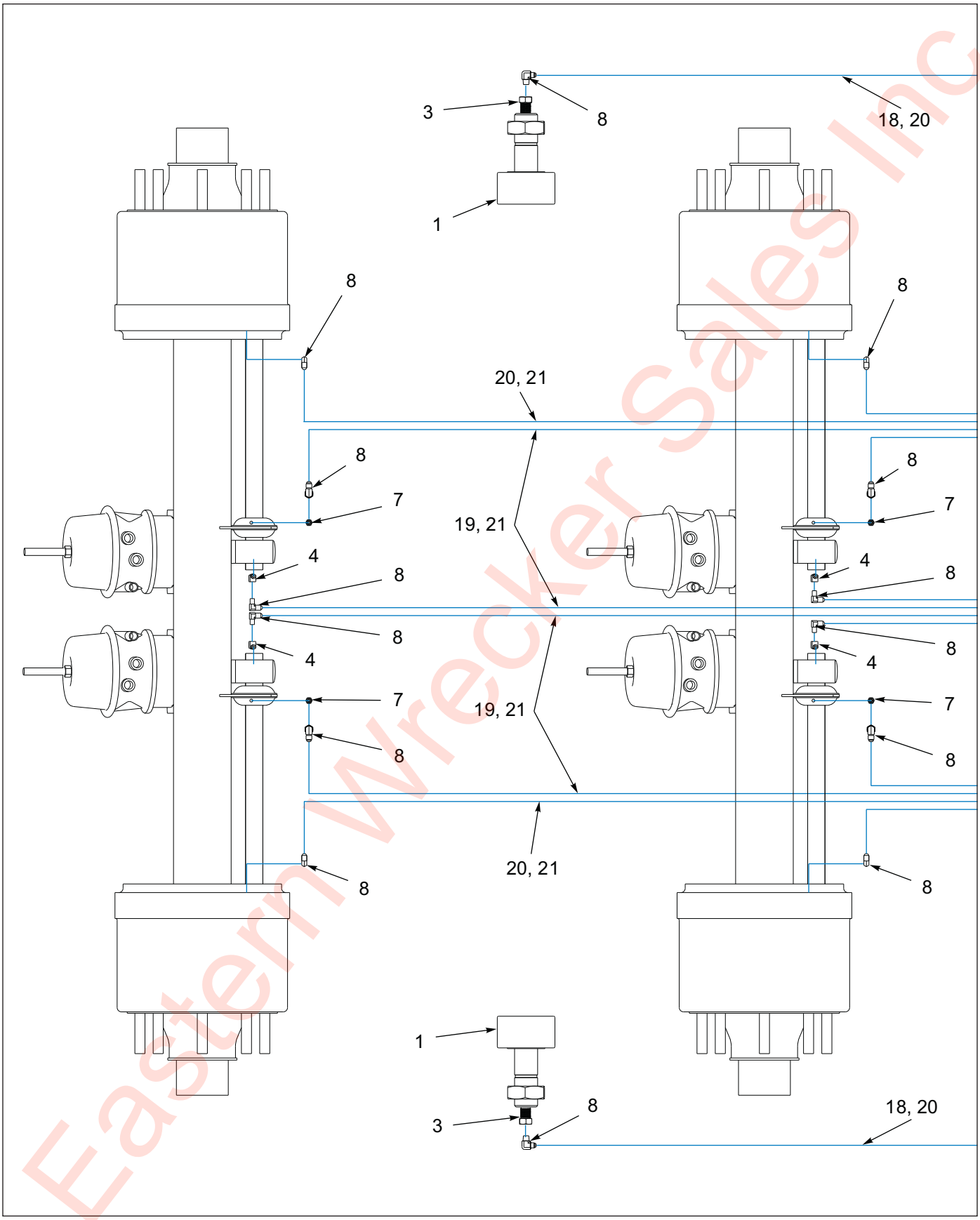

Figure 1-33: Grease System, 3 Axle (Before 11/07/2018) (1 of 2)

Eastern Wrecker Sales Inc

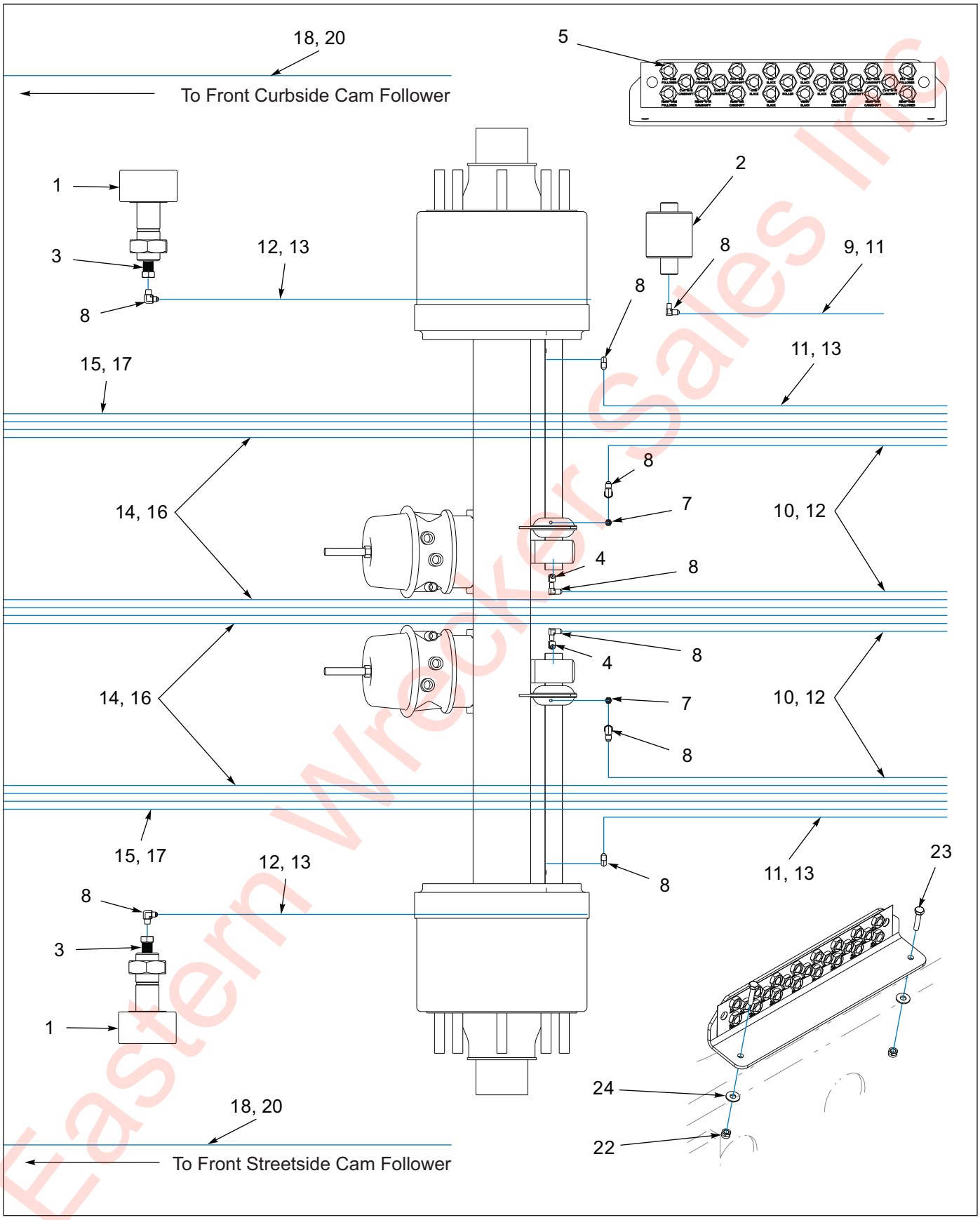

Figure 1-34: Grease System, 3 Axle (Before 11/07/2018) (2 of 2)

Eastern Wrecker Sales Inc

Grease System, 3 Axle (Before 11/07/2018)

ITEM	PART NUMBER	DESCRIPTION	QTY
	214468	SUSP 455B-102 SB **(STD)**	- -
	214477	SUSP 455B-CA-102 **(CA)**	- -
1	3-076-010015	5IN DIA CAM FOLLOWER	- -
2	3-645-010084	ROLLER ASSY,REAR U/C 660FG	- -
3	118-2659-1	BUSHING 1/4 X 1/8 NPT STL	4
4	101528	ELBOW,BRASS PIPE STREET	6
5	142545	NUT 7/16 FOR BULKHEAD	23
6	143688	DECAL, GREASE 410/610 U/C	1
7	202094	ADAPTER 5/16--18X1/8NPT(F)	6
8	202099	FITTING GREASE 90 SWIV PTC 1/8	23
9	202103	HOSE ASSY GREASE 1/8 X 45 **(STD ONLY)**	1
10	202104	HOSE ASSY GREASE 1/8 X 60 **(STD ONLY)**	4
11	202106	HOSE ASSY GREASE 1/8 X 72 **(CA REQ 1 EACH)**	2
12	202107	HOSE ASSY GREASE 1/8 X 83 **(CA REQ 4 EACH)**	2
13	202111	HOSE ASSY GREASE 1/8 X 102 **(CA ONLY)**	4
14	202112	HOSE ASSY GREASE 1/8 X 118 **(STD ONLY)**	4
15	202113	HOSE ASSY GREASE 1/8 X 126 **(STD ONLY)**	2
16	202116	HOSE ASSY GREASE 1/8 X 144 **(CA ONLY)**	4
17	202118	HOSE ASSY GREASE 1/8 X 156 **(CA ONLY)**	2
18	202121	HOSE ASSY GREASE 1/8 X 172 **(STD ONLY)**	2
19	202123	HOSE ASSY GREASE 1/8 X 186 **(STD ONLY)**	4
20	204223	HOSE ASSY GREASE 1/8 X 200	2
21	204224	HOSE ASSY GREASE 1/8 X 217 **(CA ONLY)**	6
22	1-512-010005-01	NUT HEX SLFLKG, 1/4-20 GRADE B	2
23	1-654-010047-07	SCREW, HEX CAP 1/2-20X1-1/4 GRB	2
24	1-861-010032-07	WASHER, FLAT, ZP/CD 1/4W	2

Eastern Wrecker Sales Inc

Table provided for general use.

NOTES:

Eastern Wrecker Sales Inc

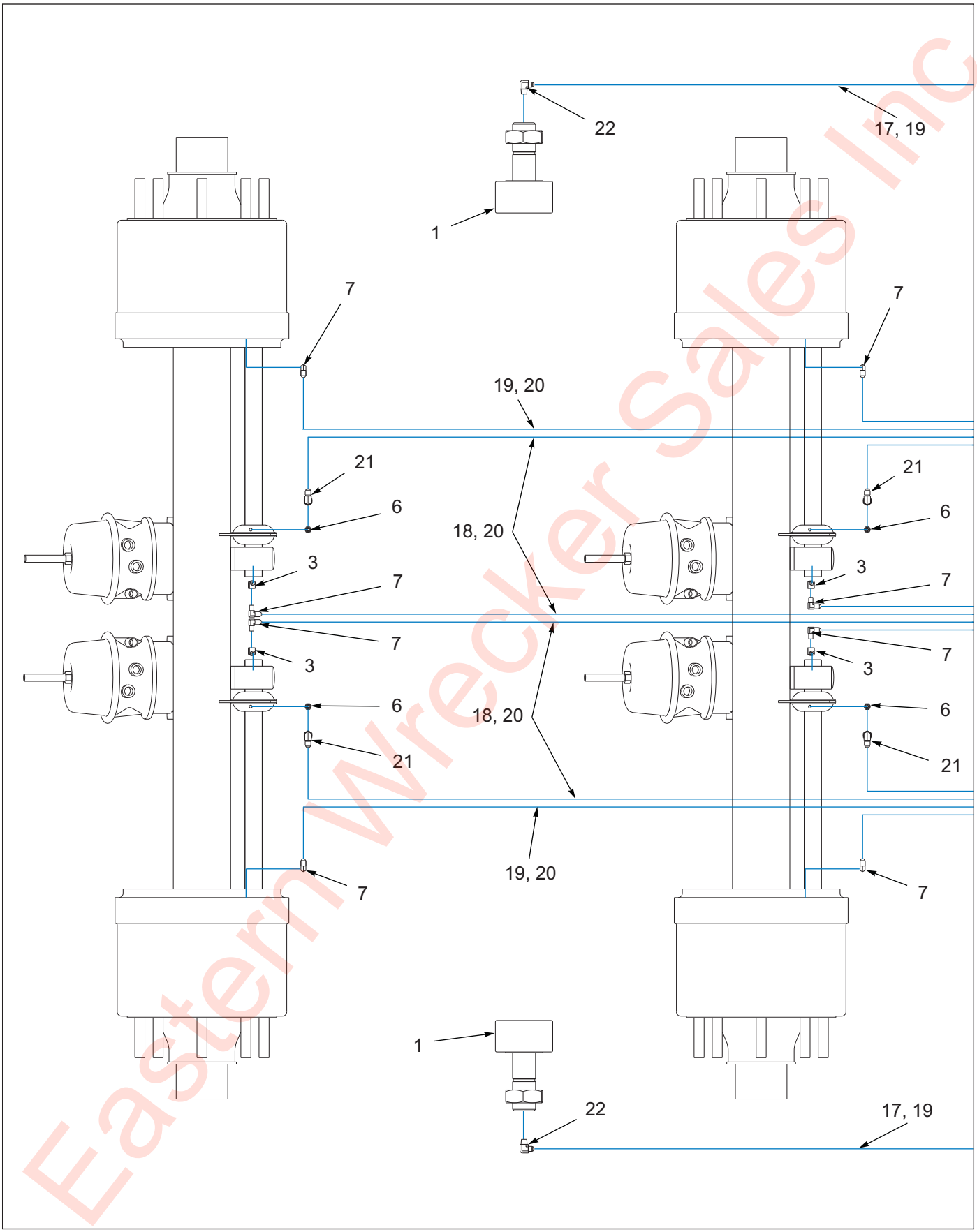

Figure 1-35: Grease System, 3 Axle (After 11/07/2018 - Before 08/31/2020) (1 of 2)

Eastern Wrecker Sales Inc

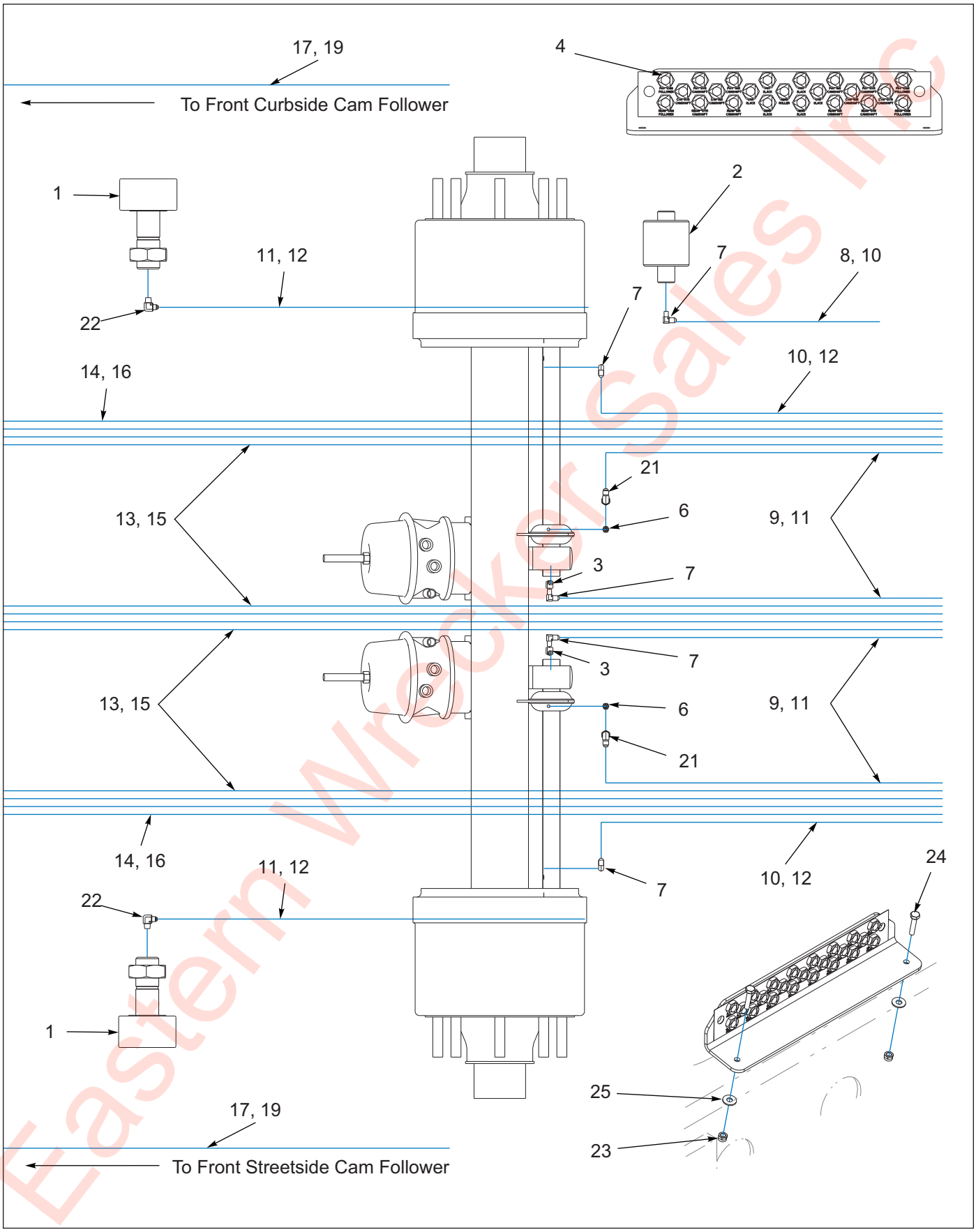

Eastern Wrecker Sales Inc

Figure 1-36: Grease System, 3 Axle (After 11/07/2018 - Before 08/31/2020) (1 of 2)

Grease System, 3 Axle (After 11/07/2018 - Before 08/31/2020)

ITEM	PART NUMBER	DESCRIPTION	QTY
	214468	SUSP 455B-102 SB **(STD)**	- -
	214477	SUSP 455B-CA-102 **(CA)**	- -
1	3-076-010015	5IN DIA CAM FOLLOWER	- -
2	3-645-010084	ROLLER ASSY,REAR U/C 660FG	- -
3	101528	ELBOW,BRASS PIPE STREET	6
4	142545	NUT 7/16 FOR BULKHEAD	23
5	143688	DECAL, GREASE 410/610 U/C **(NOT SHOWN)**	1
6	202094	ADAPTER 5/16--18X1/8NPT(F)	6
7	202099	FITTING GREASE 90 SWIV PTC 1/8	13
8	202103	HOSE ASSY GREASE 1/8 X 45 **(STD ONLY)**	1
9	202104	HOSE ASSY GREASE 1/8 X 60 **(STD ONLY)**	4
10	202106	HOSE ASSY GREASE 1/8 X 72 **(CA REQ 1 EACH)**	2
11	202107	HOSE ASSY GREASE 1/8 X 83 **(CA REQ 4 EACH)**	2
12	202111	HOSE ASSY GREASE 1/8 X 102 **(CA ONLY)**	4
13	202112	HOSE ASSY GREASE 1/8 X 118 **(STD ONLY)**	4
14	202113	HOSE ASSY GREASE 1/8 X 126 **(STD ONLY)**	2
15	202116	HOSE ASSY GREASE 1/8 X 144 **(CA ONLY)**	4
16	202118	HOSE ASSY GREASE 1/8 X 156 **(CA ONLY)**	2
17	202121	HOSE ASSY GREASE 1/8 X 172 **(STD ONLY)**	2
18	202123	HOSE ASSY GREASE 1/8 X 186 **(STD ONLY)**	4
19	204223	HOSE ASSY GREASE 1/8 X 200	2
20	204224	HOSE ASSY GREASE 1/8 X 217 **(CA ONLY)**	6
21	216600	FITTING GREAST 90SWIV P-T-C1/4	4
22	216599	FITTING,GREASE 1/4 TUBE X 1/8	6
23	1-512-010005-01	NUT HEX SLFLKG, 1/4-20 GRADE B	2
24	1-654-010047-07	SCREW, HEX CAP 1/2-20X1-1/4 GRB	2
25	1-861-010032-07	WASHER, FLAT, ZP/CD 1/4W	2

Eastern Wrecker Sales Inc

Table provided for general use.

NOTES:

Eastern Wrecker Sales Inc

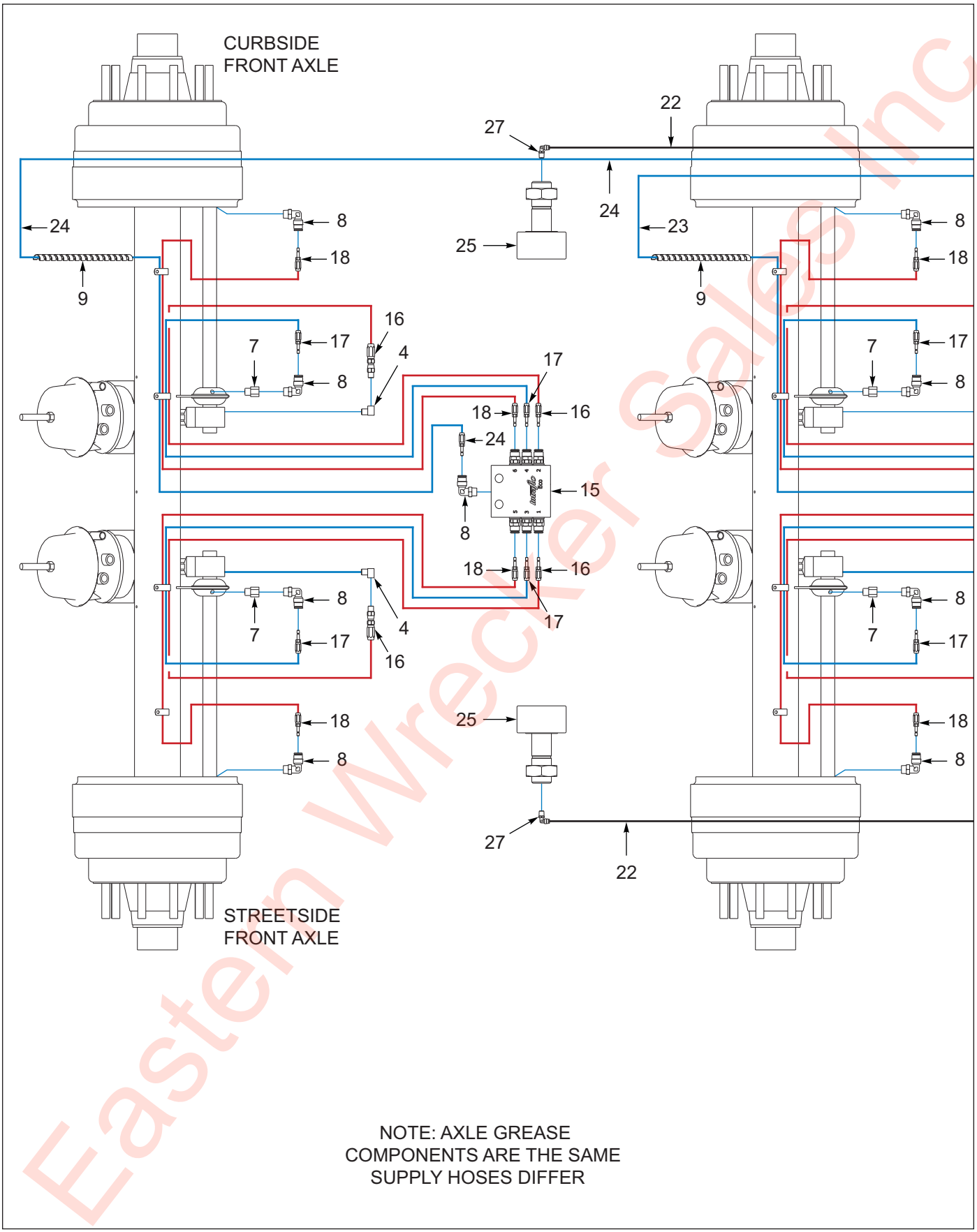

Figure 1-37: Grease System, 3 Axle (After 08/31/2020) (1 of 3)

Eastern Wrecker Sales Inc

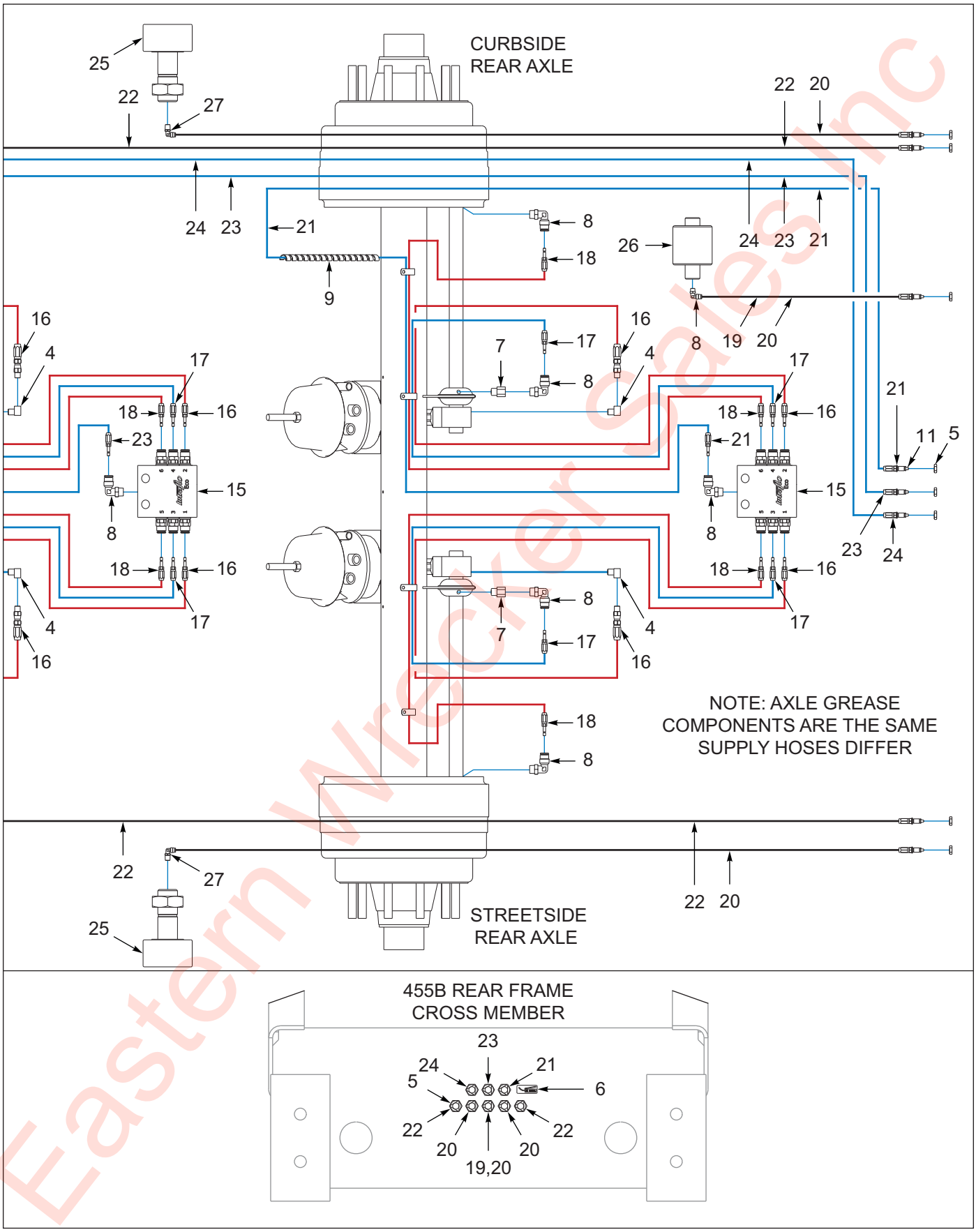

Figure 1-38: Grease System, 3 Axle (After 08/31/2020) (2 of 3)

Eastern Wrecker Sales Inc

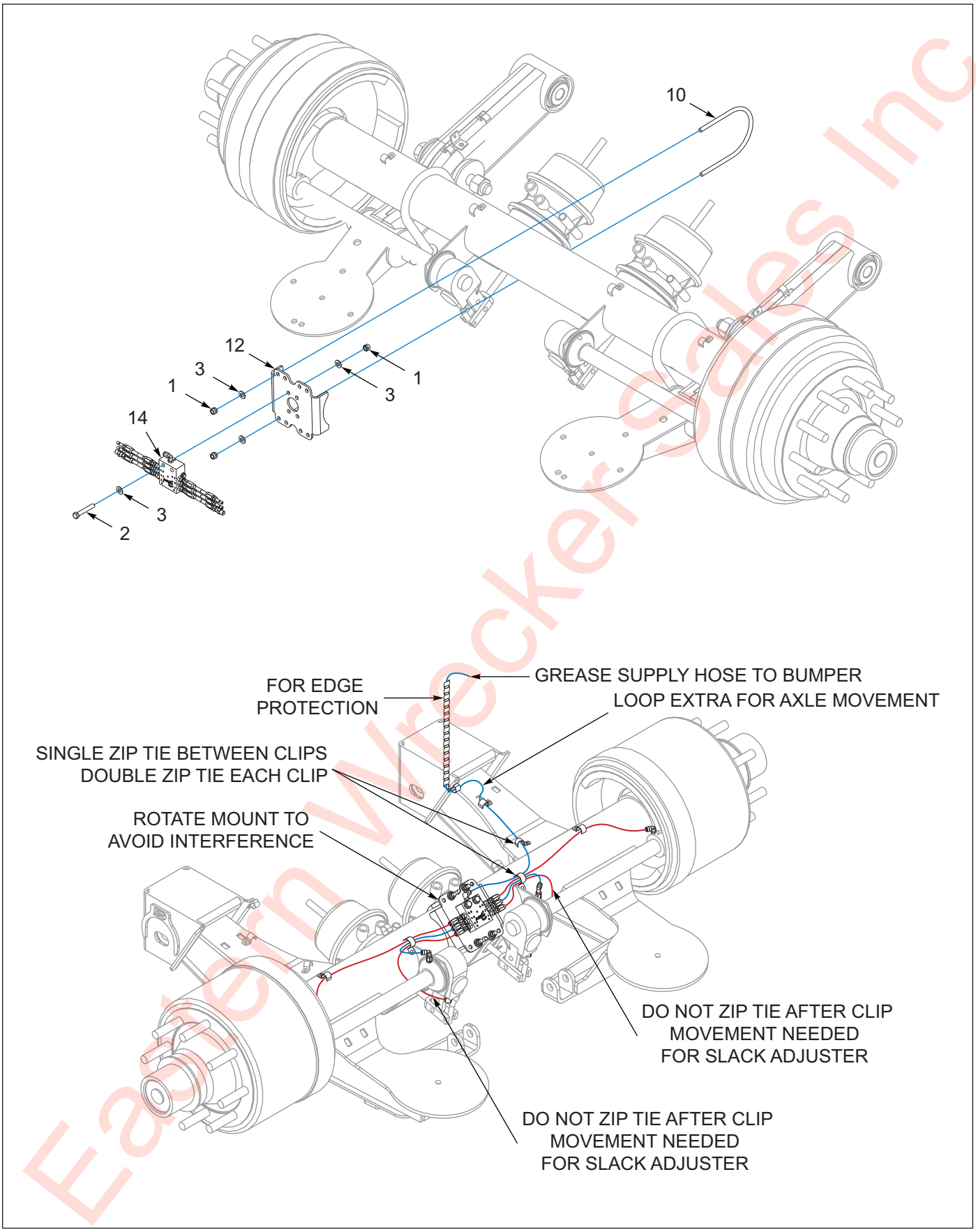

Eastern Wrecker Sales Inc

Figure 1-39: Grease System, 3 Axle (After 08/31/2020) (3 of 3)

Grease System, 3 Axle (After 08/31/2020)

ITEM	PART NUMBER	DESCRIPTION	QTY
	214468	SUSP 455B-102 SB	- -
	214477	SUSP 455B-CA-102 **(CA)**	- -
1	1-512-010005-05	NUT, HEX, SLFLKG GRB 3/8-16 **(QTY PER AXLE)**	6
2	1-654-010051-10	SCREW,HX CP3/8-16X2-1/4 GR5 **(QTY PER AXLE)**	2
3	1-861-010032-10	WASHER, FLAT 3/8" N ZP/CD **(QTY PER AXLE)**	8
4	101528	ELBOW,BRASS PIPE STREET **(QTY PER AXLE)**	2
5	142545	NUT 7/16 FOR BULKHEAD **(QTY PER AXLE)**	1
6	2-573-010330-04	DECAL LUBRICATION, SEE MANUAL	1
7	202094	ADAPTER 5/16--18X1/8NPT(F) **(QTY PER AXLE)**	2
8	202099	FITTING GREASE 90 SWIV PTC 1/8 **(QTY PER AXLE)** **(REAR FOLLOWER REQ 1 EACH)** **(KIT 14, VALVE INCLUDES 1 EACH)**	4
9	212785	SPIRAL LOOM, 1/2" BLACK **(BY THE FOOT) (1 FOOT PER AXLE)**	- -
10	222479	U-BOLT 3/8-16X5X6-3/4X2" T ZP **(QTY PER AXLE)**	2
11	224304	ZERK FITTING 1/4 SAE **(PART OF ITEMS 19-21, INCLUDES 1 EACH)**	- -
12	224325	MOUNT BOLT-ON AXLE GREASE VLV **(QTY PER AXLE)**	1
14	229177	VALVE AXLE GREASE ASM 22-16-28 **(QTY PER AXLE)** **(KIT INCLUDES ITEMS 8, 15-18)**	1
15	224304	VALVE AXLE GREASE DIVIDER	1
16	225770	HOSE ASSY GREAST 1/8" X 22" **(PORTS 1 & 2)**	2
17	229178	HOSE ASSY GREASE 1/8" X 16" **(PORTS 3 & 4)**	2
18	229182	HOSE ASSY GREASE 1/8" X 28" **(PORTS 5 & 6)**	2
19	202104	HOSE ASSY GREASE 1/8 X 60 **(INCLUDES ITEM 11, 1 EACH)**	1
20	202107	HOSE ASSY GREASE 1/8 X 83 **(CA REQ 1 EACH)** **(INCLUDES ITEM 11, 1 EACH)**	2
20	202112	HOSE ASSY GREASE 1/8 X 118 **(CA) (INCLUDES ITEM 11, 1 EACH)**	2
21	202113	HOSE ASSY GREASE 1/8 X 126 **(REAR AXLE)** **(INCLUDES ITEM 11, 1 EACH)**	1
21	202116	HOSE ASSY GREASE 1/8 X 144 **(CA REAR AXLE)** **(INCLUDES ITEM 11, 1 EACH)**	1
22	202121	HOSE ASSY GREASE 1/8 X 172 **(INCLUDES ITEM 11, 1 EACH)**	2
22	204223	HOSE ASSY GREASE 1/8 X 200 **(CA) (INCLUDES ITEM 11, 1 EACH)**	2
23	202122	HOSE ASSY GREASE 1/8 X 180 **(MIDDLE AXLE)** **(INCLUDES ITEM 11, 1 EACH)**	1
23	229181	HOSE ASSY GREAST 1/8 X 210 **(CA MIDDLE AXLE)** **(INCLUDES ITEM 11, 1 EACH)**	1
24	230759	HOSE ASSY GREAST 1/8 X 240 **(FRONT AXLE)** **(INCLUDES ITEM 11, 1 EACH)**	1
24	204226	HOSE ASSY GREASE 1/8 X 260 **(CA FRONT AXLE)** **(INCLUDES ITEM 11, 1 EACH)**	1
25	3-076-010015	5IN DIA CAM FOLLOWER	4
26	3-645-010084	ROLLER ASSY,REAR U/C 660FG	1
27	216600	FITTING GREAST 90SWIV P-T-C1/4	4

Eastern Wheel Sales Inc

Suspensions

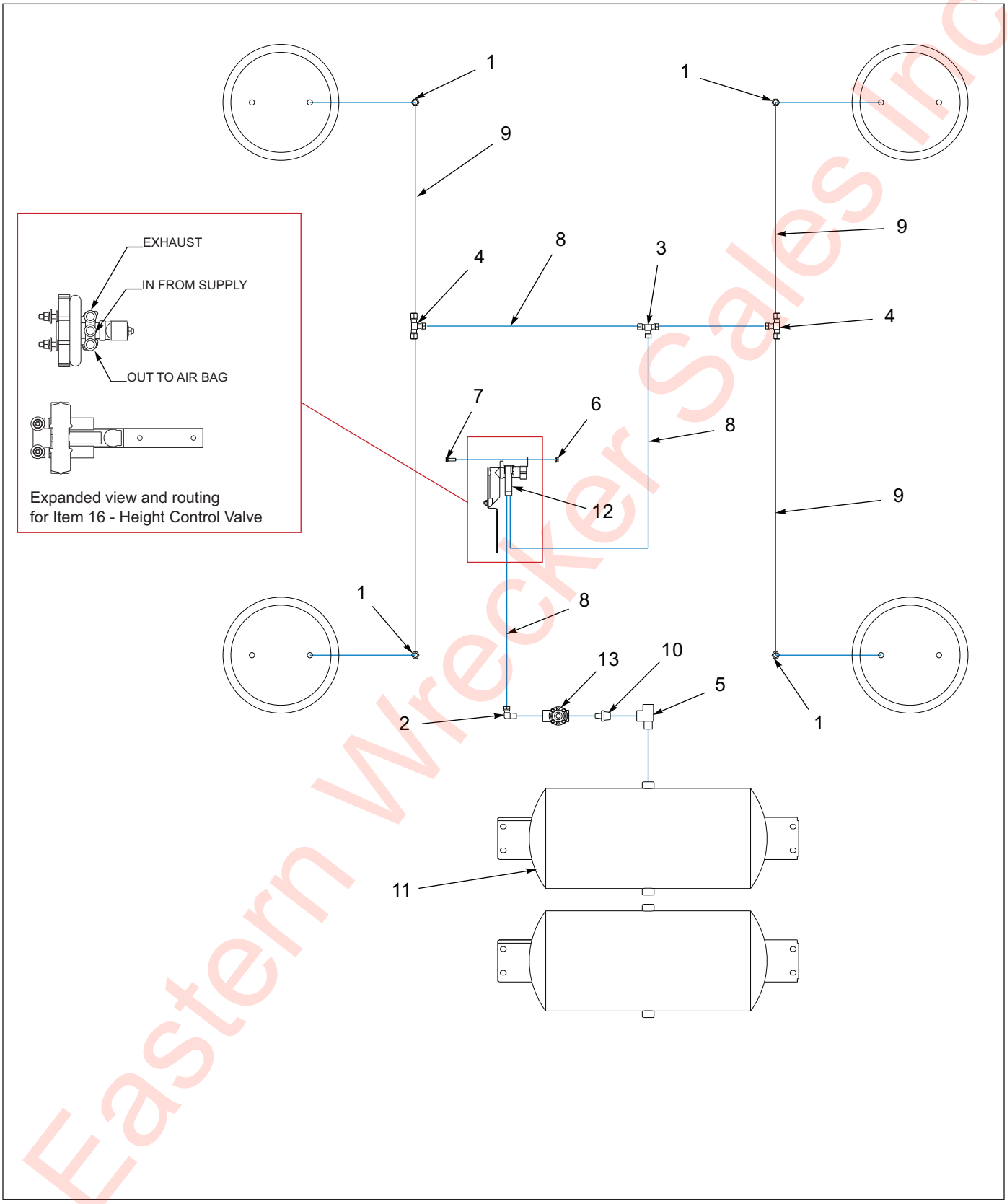

Figure 1-40: Air Ride Suspension - 440B

Eastern Wrecker Sales Inc

Air Ride Suspension - 440B

ITEM	PART NO.	DESCRIPTION	QTY.
	212402	SUSP 440CA 2512 - 70.5 THERM TIS **(REF. ONLY)**	- -
	212404	SUSP 440CA 2512 - 70.5 D/L TIS **(REF. ONLY)**	- -
	216200	SUSP 440B 102 BB TIS **(REF. ONLY)**	- -
	216202	SUSP 440B 102 BB D/L TIS **(REF. ONLY)**	- -
1	1-297-010007-11	FITTING, AIR	4
2	1-297-010008-07	FITTING, AIR 90	1
3	1-297-010010-01	FITTING, AIR UNION TEE	1
4	1-297-010010-04	FITTING, AIR UNION TEE	2
5	1-297-010018-04	FITTING, 1/2 BRASS PIPE, ST TEE	1
6	1-512-010005-01	NUT, HEX SLFLKG 1/4-20 UNC, GRB	2
7	1-654-010047-04	SCREW, HEX 1/4-20 UNC X 3/4 GR5	2
8	1-833-010001	TUBING, NYLON 1/4 OD	25
9	1-833-010002	TUBING, NYLON 3/8 OD	8
10	2083-8-4S	NIPPLE, HEX 1/2 - 1/4	1
11	3-780-010002	TANK, AIR	2
12	900 54 007	HEIGHT CONTROL VALVE	1
13	905-54-107	BRAKE PROTECTION VALVE	1
14	102732	AIR CONTROL KIT **(NOT SHOWN) (SEE PAGE 1-74)**	1

Eastern Wrecker Sales Inc

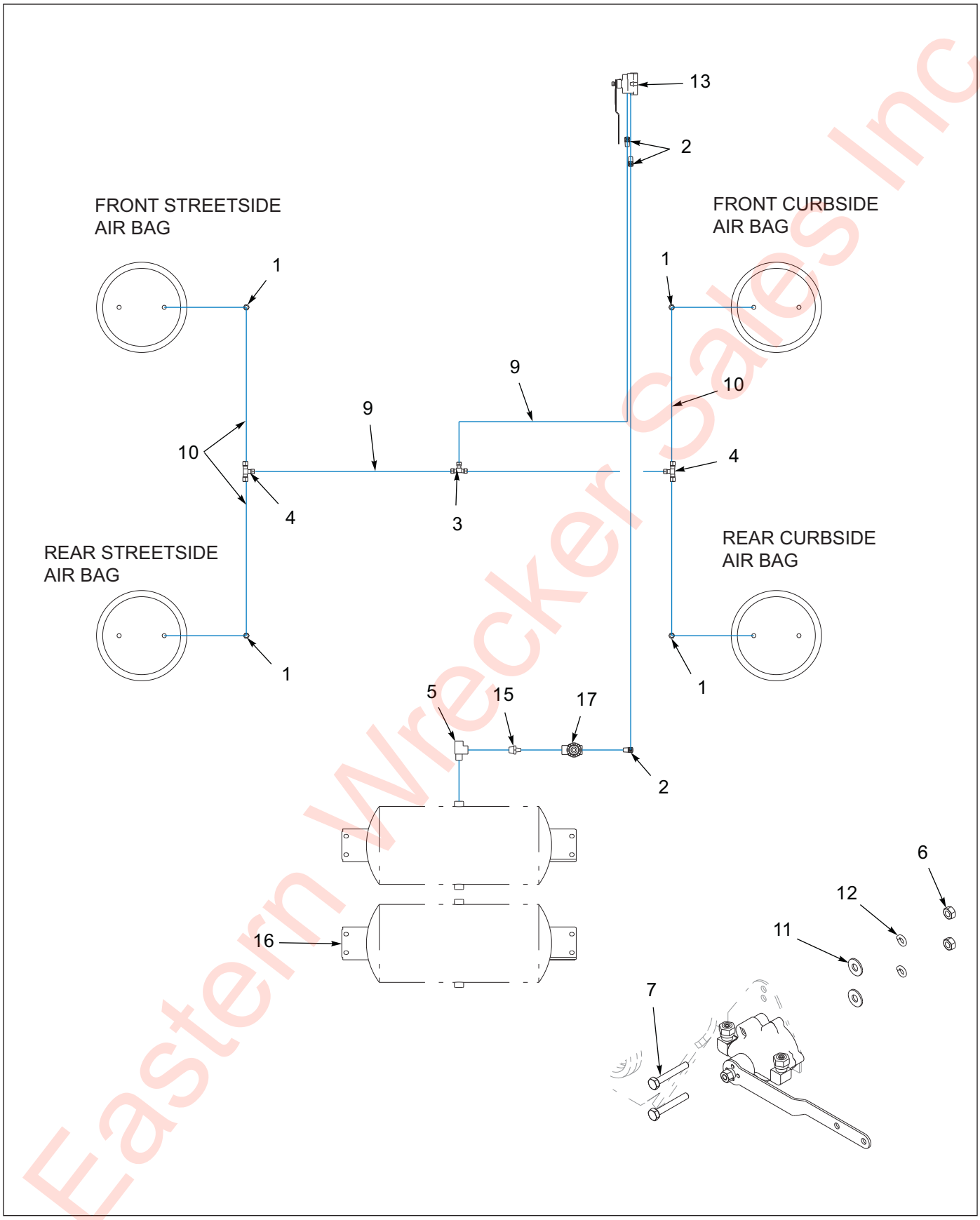

Figure 1-41: Air Ride Suspension - 440B Aqua

Eastern Wrecker Sales Inc

Air Ride Suspension - 440B Aqua

ITEM	PART NO.	DESCRIPTION	QTY.
	215486	SUSP 440B SB GRT AQUA PKG **(REF. ONLY)**	- -
1	1-297-010007-11	FITTING, AIR	4
2	1-297-010008-07	FITTING, AIR 90	3
3	1-297-010010-01	FITTING, AIR UNION TEE	1
4	1-297-010010-04	FITTING, AIR UNION TEE	2
5	1-297-010018-04	FITTING, 1/2 BRASS PIPE, ST TEE	- -
6	1-512-010007-05	NUT, HEX, 1/4-20 UNC GR2	- -
7	1-654-010047-09	SCREW, HEX 1/4-20 UNC X 1-3/4 GR5	- -
8	1-796-010004-02	TIE, STRAP, PLASTIC, .301X13.38 **(NOT SHOWN)**	15
9	1-833-010001	TUBING, NYLON 1/4 OD	25
10	1-833-010002	TUBING, NYLON 3/8 OD	8
11	1-861-010032-07	WASHER, FLAT, ZP/CD, 1/4W	- -
12	1-861-010034-09	WASHER, LKG, HLCL SPR, 1/4	- -
13	173875	HEIGHT CONTROL VALVE	- -
14	173876	AIR CONTROL VALVE INSTALL KIT	1
15	2083-8-4S	NIPPLE, HEX 1/2 - 1/4	1
16	3-780-010002	TANK, AIR	- -
17	905-54-107	BRAKE PROTECTION VALVE	- -

Eastern Wrecker Sales Inc

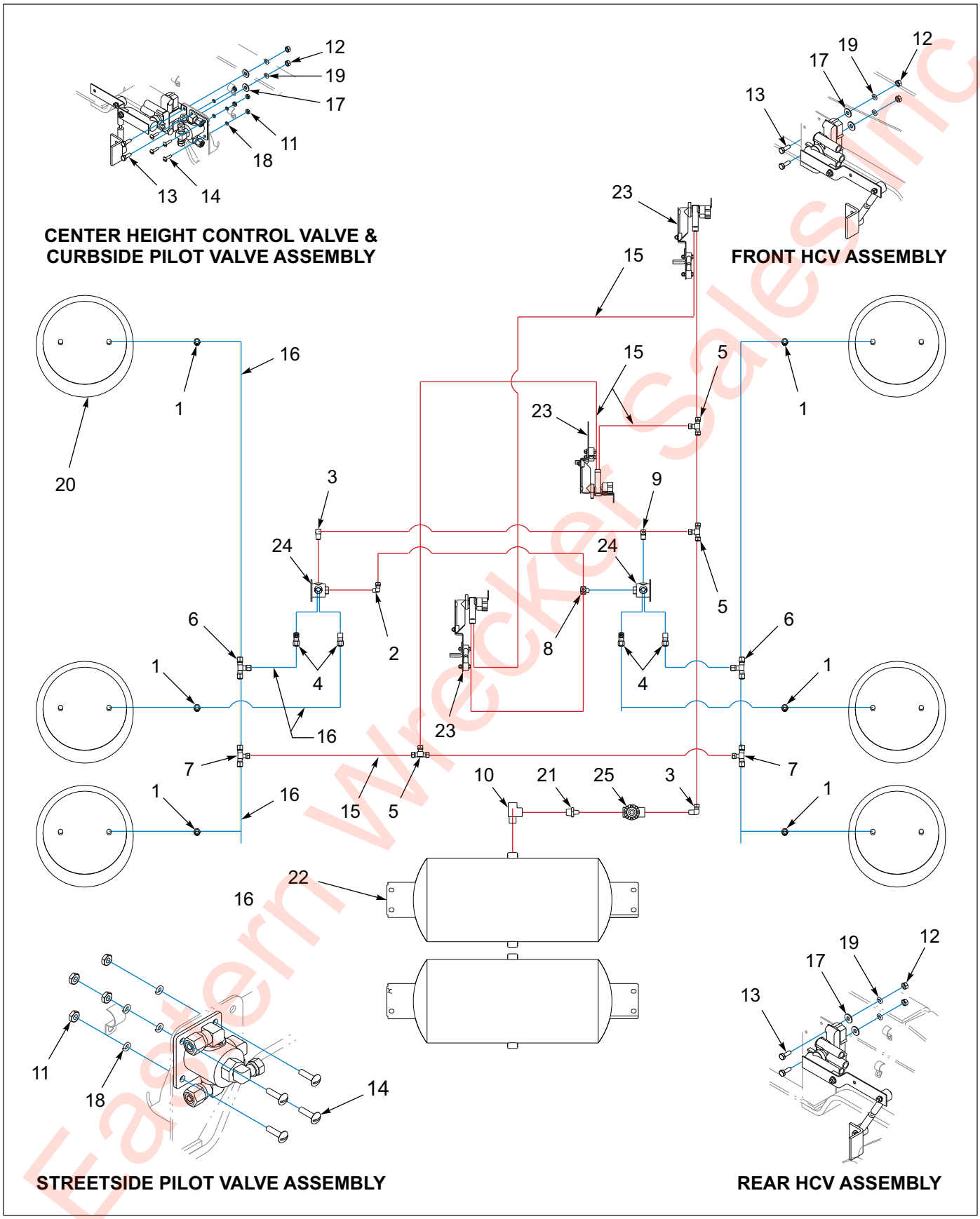

Figure 1-42: Air Ride Suspension - 455B

Eastern Wrecker Sales Inc

Air Ride Suspension - 455B

ITEM	PART NO.	DESCRIPTION	QTY.
	214468	SUSPENSION 455B 102 SB **(REF. ONLY)**	- -
	214477	SUSPENSION 455B-CA 102 SB **(REF. ONLY)**	- -
1	1-297-010007-11	FITTING AIR	6
2	1-297-010008-05	FITTING AIR 90	1
3	1-297-010008-07	FITTING AIR 90	2
4	1-297-010008-18	FITTING AIR 90	4
5	1-297-010010-01	FITTING AIR UNION TEE	3
6	1-297-010010-03	FITTING AIR UNION TEE 3/8	2
7	1-297-010010-04	FITTING AIR UNION TEE	2
8	1-297-010015-02	FITTING AIR BRANCH TEE	1
9	1-297-010015-03	FITTING AIR BRANCH TEE	1
10	1-297-010018-04	FITTING, 1/2 BRASS PIPE, ST TEE	- -
11	1-512-010007-03	NUT, HEX 10-24	8
12	1-512-010007-05	NUT, HEX 1/4-20 UNC X 3/4GR5	6
13	1-654-010047-04	SCREW, HEX HEAD CAP 1/4-20 X 3/4 GR5	6
14	1-656-010003051	SCREW RH HD MACH #10-24 X 3/4	8
15	1-833-010001	TUBING NYLON 1/4 OD	48
16	1-833-010002	TUBING NYLON 3/8 OD	24
17	1-861-010032-07	WASHER, FLAT Z/P/CD, 1/4W	6
18	1-861-010034-07	WASHER, LKG HLCL SPR, #10	8
19	1-861-010034-09	WASHER, LKG HLCL SPR, 1/4	6
20	102363	SUSPENSION, ADJ RLU-228-3.5 **(SEE PAGE 1-60)**	8
21	2083-8-4S	NIPPLE, HEX 1/2 - 1/4	1
22	3-780-010002	TANK, AIR	2
23	3-843-010034	VALVE AIR RIDE HEIGHT CONTROL	3
24	900-54-079	PILOT VALVE	3
25	905-54-107	BRAKE PROTECTION VALVE	2
26	205573	TOOL, RIDE HEIGHT, SMALL BRAKES **(NOT SHOWN)**	- -
27	205574	TOOL, RIDE HEIGHT, BIG BRAKES **(NOT SHOWN)**	- -

Eastern Wrecker Sales Inc

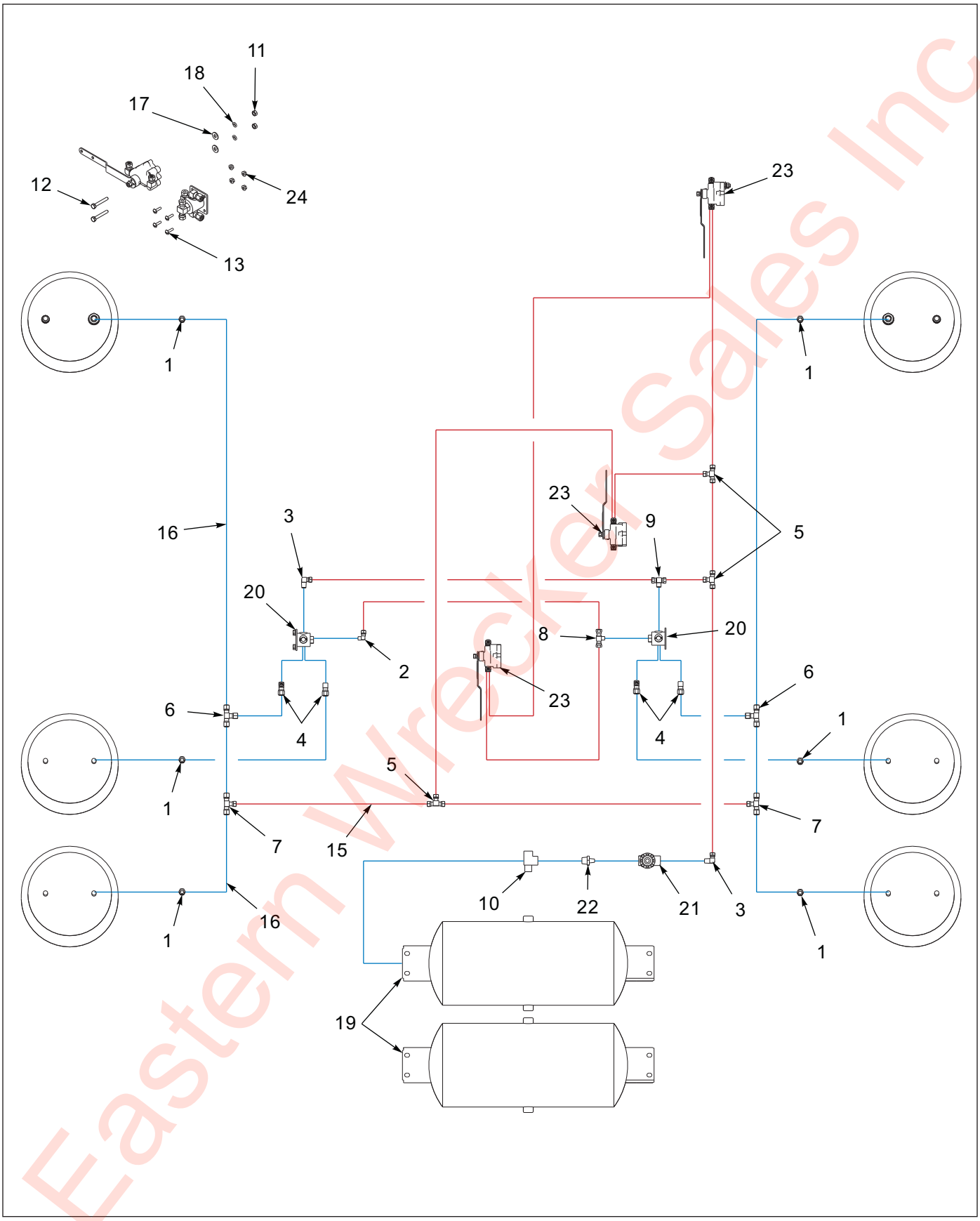

Figure 1-43: Air Ride Suspension - 440B Aqua

Eastern Wrecker Sales Inc

Air Ride Suspension - 455B Aqua

ITEM	PART NO.	DESCRIPTION	QTY.
	216222	SUSP 455B CA-102 AQUA **(REF. ONLY)**	- -
1	1-297-010007-11	FITTING AIR	6
2	1-297-010008-05	FITTING AIR 90	1
3	1-297-010008-07	FITTING AIR 90	8
4	1-297-010008-18	FITTING AIR 90	4
5	1-297-010010-01	FITTING AIR UNION TEE	3
6	1-297-010010-03	FITTING AIR UNION TEE 3/8	2
7	1-297-010010-04	FITTING AIR UNION TEE	2
8	1-297-010015-02	FITTING AIR BRANCH TEE	1
9	1-297-010015-03	FITTING AIR BRANCH TEE	1
10	1-297-010018-04	FITTING, 1/2 BRASS PIPE, ST TEE	- -
11	1-512-010007-05	NUT, HEX, 1/4-20 UNC, GR2	6
12	1-654-010047-09	SCREW, HEX HEAD CAP 1/4-20 X 1-3/4 GR5	6
13	1-656-010003051	SCREW RH HD MACH #10-24 X 3/4	8
14	1-796-010004-02	TIE, STRAP, PLASTIC, .301X13.38	15
15	1-833-010001	TUBING NYLON 1/4 OD	48
16	1-833-010002	TUBING NYLON 3/8 OD	24
17	1-861-010032-07	WASHER, FLAT Z/P/CD, 1/4W	6
18	1-861-010034-09	WASHER, LKG HLCL SPR, 1/4	6
19	3-780-010002	TANK, AIR	- -
20	900-54-079	PILOT VALVE	2
21	905-54-107	BRAKE PROTECTION VALVE	1
22	2083-8-4S	NIPPLE, HEX 1/2 - 1/4	1
23	173875	HEIGHT CONTROL VALVE	3
24	212074	NUT, FLG HD, SERR, 10-24 UNC	8
25	205573	TOOL, RIDE HEIGHT, SMALL BRAKES **(NOT SHOWN)**	- -
26	205574	TOOL, RIDE HEIGHT, BIG BRAKES **(NOT SHOWN)**	- -

Eastern Wrecker Sales Inc

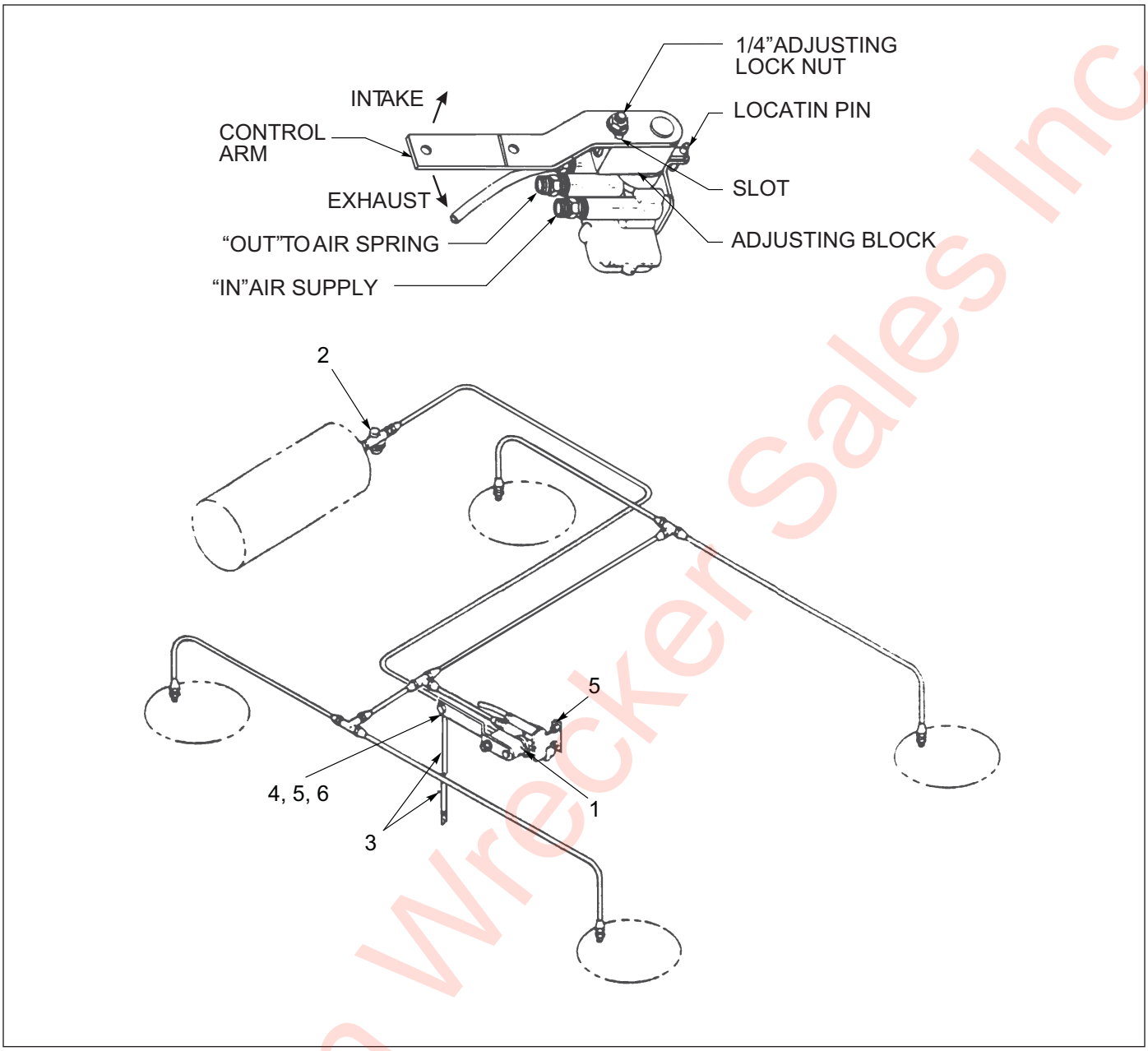

Figure 1-44: Air Control Kit - Neway

Air Control Kit - Neway

ITEM	PART NO.	DESCRIPTION	QTY.
	102732	AIR CONTROL KIT NEWAY	
1	900 54 007	HEIGHT CONTROL VALVE **(BEFORE 3-04-2016)**	1
1	905-54-186	HEIGHT CONTROL VALVE **(AFTER 3-04-2016)**	1
2	905-54-107	AIR PRESSURE PROTECTION VALVE & FILTER	1
3	111021	SRK - 167 KIT - ADJ. LINK ASSEMBLY	1
4	1-654-010047-04	SCREW, HEX HEAD CAP 1/4-20 X 3/4 GR5	2
5	1-512-010005-01	LOCK NUT 1/4-20	2
6	-----	DECAL - OPERATING	1

Eastern Wrecker Sales Inc

Table provided for general use.

NOTES:

Eastern Wrecker Sales Inc

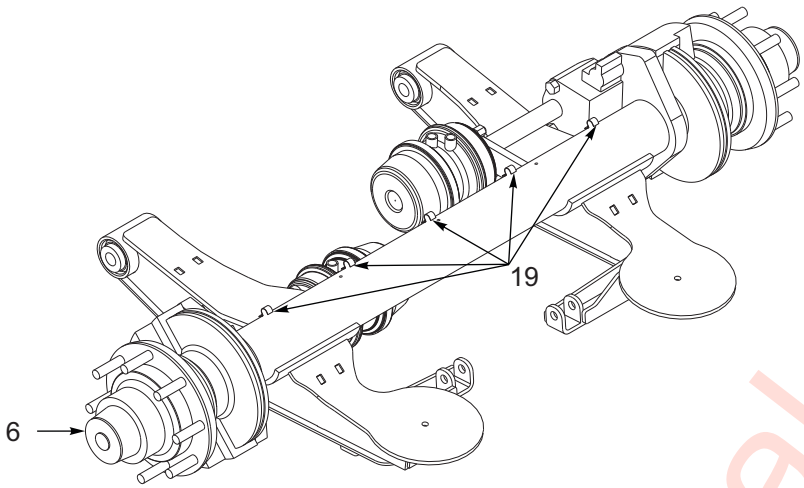

VIEW OF DISC BRAKE ASSEMBLY (OPTION) CLAMP LOCATIONS (FOR BREAKDOWN SEE BELOW)

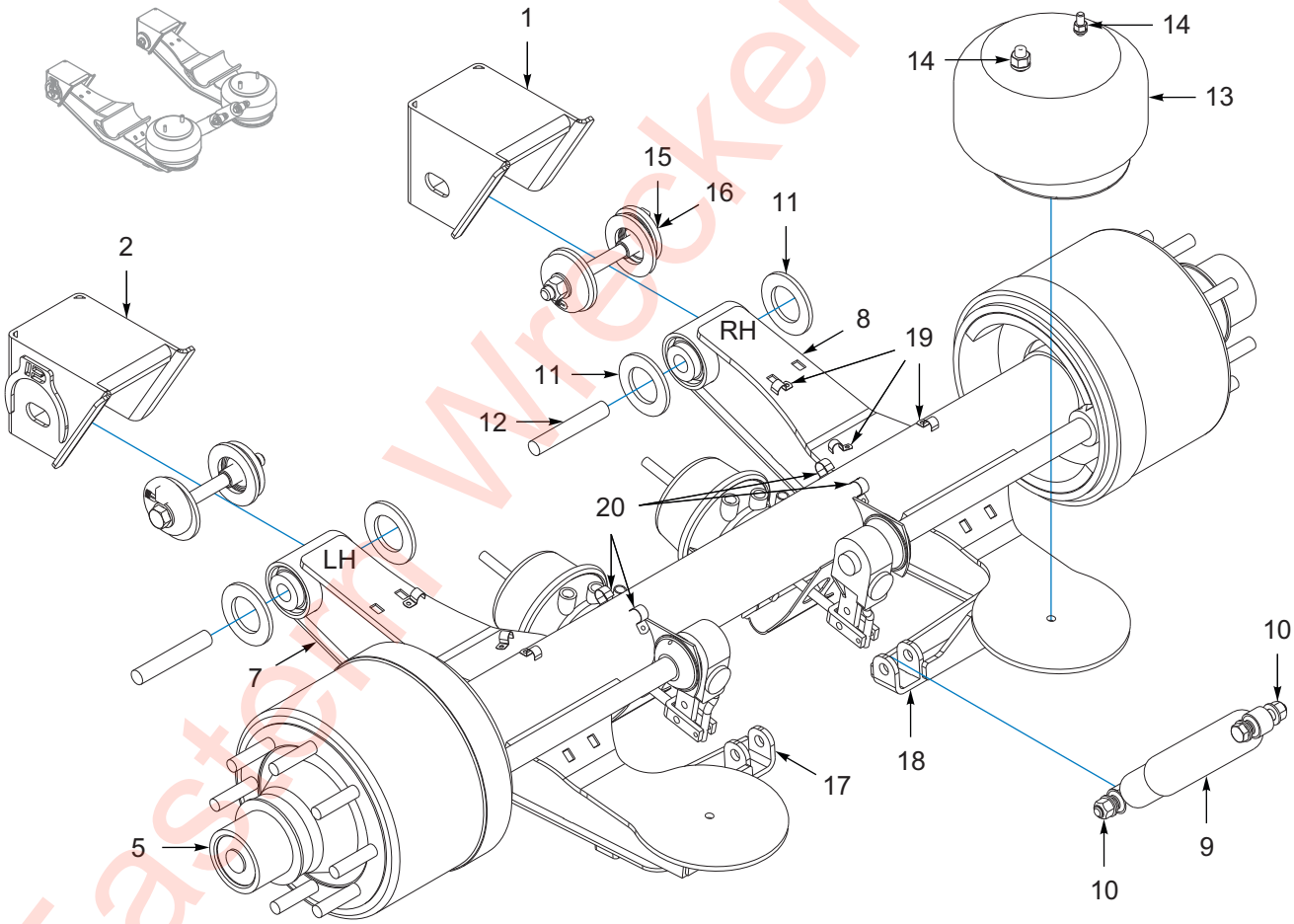

VIEW OF DRUM BRAKE ASSEMBLY

Figure 1-45: Suspension Hanger, 12.25 X 7.5, LSS- 25K-3.5 RLU

Eastern Wrecker Sales Inc

Suspension Hanger, 12.25 X 7.5 LSS-25K-3.5 RLU

ITEM	PART NUMBER	DESCRIPTION	QTY
1	218068	FRAME BRKT RH LSS-25K SUSP	1
2	218070	FRAME BRKT LH LSS-25K SUSP	1
3	218075	SUSPENSION BEAMS LSS-25K **(INCLUDES ITEMS 7-8, 17-18)**	1
4	218079	SUSP FASTNER KIT 25K-3_5RLU **(INCLUDES ITEMS 9-14, 16)**	1
5	-----	AXLE WELDMENT 2512 SPRING **(DRUM BRAKE STANDARD)** **(VIN / NIV REQUIRED, CALL FOR ASSISTANCE - SEE PAGE 1-1)**	
6	-----	AXLE WELDMENT 2512 DISC **(DISC BRAKE OPTION)** **(VIN / NIV REQUIRED, CALL FOR ASSISTANCE - SEE PAGE 1-1)**	1
7	225953	SUSP BEAM LH ASSY W/ BUSHING **(PART OF ITEM 3)**	1
8	225954	SUSP BEAM RH ASSY W/ BUSHING **(PART OF ITEM 3)**	1
9	225955	SHOCK ABSORBER M85323 **(PART OF ITEMS 4)**	2
10	225956	HARDWARE KIT M85323 SHOCK **(PART OF ITEM 4)**	2
11	225958	BEAM SPACER LSS-25K**(PART OF ITEM 4)**	4
12	225959	PIVOT BOLT SLEEVE LSS-25K **(PART OF ITEM 4)**	2
13	225962	AIR SPRING F/S W01-358-9307 **(PART OF ITEM 4)**	2
14	225963	HARDWARE KIT AIR SPRING **(PART OF ITEM 4)**	2
15	225969	PIVOT HARDWARE KIT LSS-25K **(W/O-BUSHING)**	2
16	225970	PIVOT HARDWARE KIT W/BUSHING **(PART OF ITEM 4)**	2
17	230611	SHOCK WLDMT LH LSS-25K **(PART OF ITEM 3)**	1
18	230612	SHOCK MT WLDMT RH LSS-25K **(PART OF ITEM 3)**	1
19	3-181-010034-1	CLAMP CONDUIT STEEL 1/2 **(DISC BRAKE AXLES, REQ 5 EACH)** **(DRUM BRAKE AXLES, REQ 6 EACH)**	- -
20	3-181-010034-2	CLAMP CONDUIT STEEL 3/4 **(DRUM BRAKE)**	4

Eastern Wrecker Parts Inc

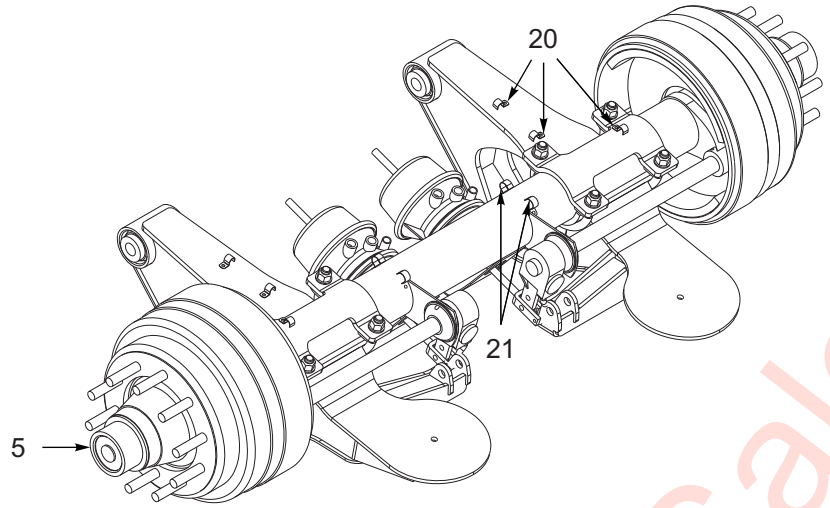

VIEW OF DRUM BRAKE CLAMP LOCATIONS (FOR BREAKDOWN SEE BELOW)

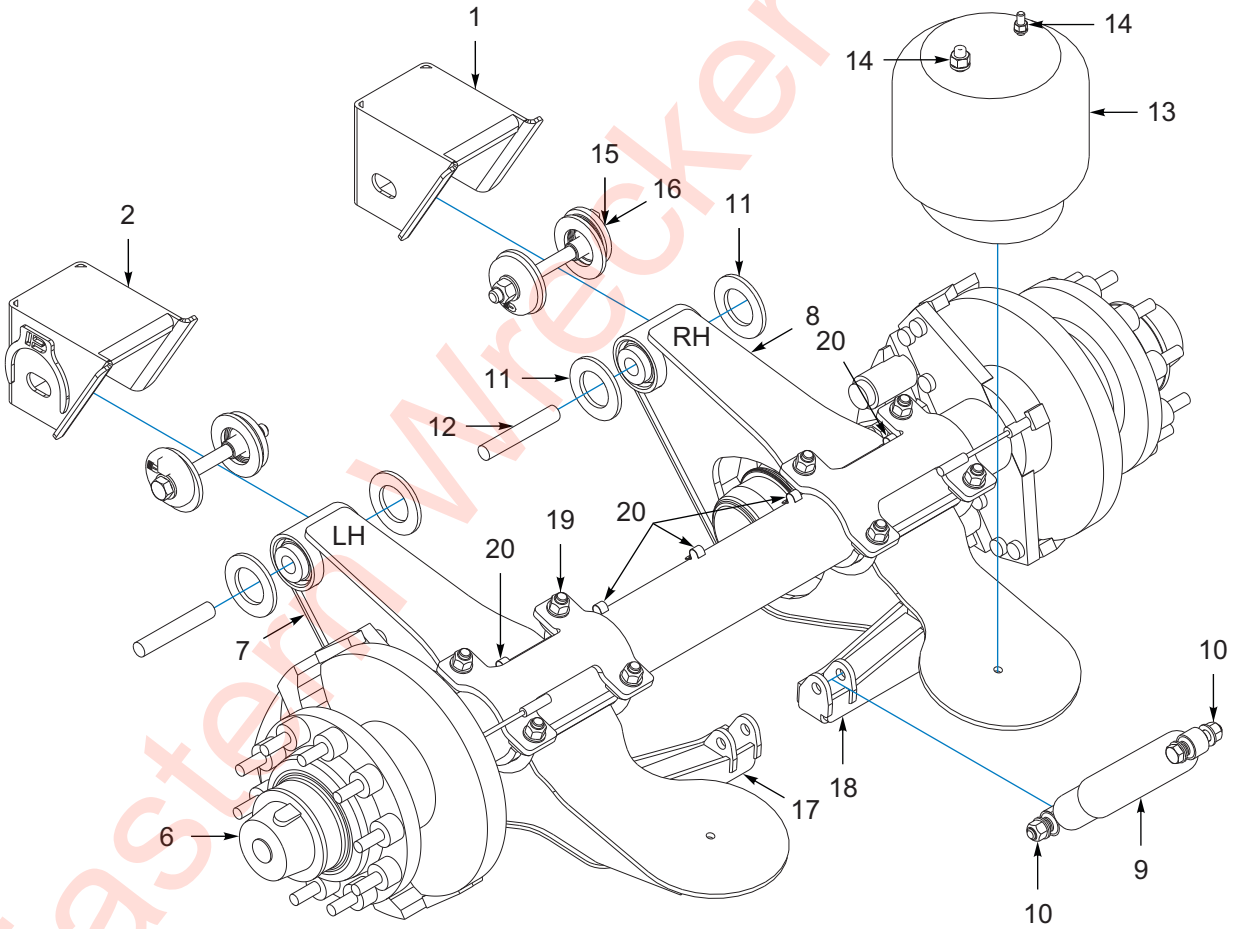

VIEW OF DISC BRAKE ASSEMBLY (OPTION)

Figure 1-46: Suspension Hanger, 16.5, LSS- 25K-3.5 RLU

Eastern Wrecker Sales Inc

Suspension Hanger, 16.5, LSS-25K-5.5 RLU

ITEM	PART NUMBER	DESCRIPTION	QTY
1	218068	FRAME BRKT RH LSS-25K SUSP	1
2	218070	FRAME BRKT LH LSS-25K SUSP	1
3	226048	SUSPENSION BEAMS 25K-05_5RLU **(INCLUDES ITEMS 7-8, 17-18)**	1
4	226049	SUSP FASTNER KIT 25K-05_5RLU **(INCLUDES ITEMS 9-14, 16)**	1
5	-----	AXLE WLDMT 2512 SPRING **(DRUM BRAKE)** **(VIN / NIV REQUIRED, CALL FOR ASSISTANCE - SEE PAGE 1-1)**	1
6	-----	AXLE WLDMT 2512 DISC **(DISK BRAKE OPTION)** **(VIN / NIV REQUIRED, CALL FOR ASSISTANCE - SEE PAGE 1-1)**	1
7	238566	TRAILING BEAM LH W/BUSHING **(PART OF ITEM 3)**	1
8	238567	TRAILING BEAM RH W/ BUSHING (**PART OF ITEM 3)**	1
9	225955	SHOCK ABSORBER M85323 **(PART OF ITEMS 4)**	2
10	225956	HARDWARE KIT M85323 SHOCK **(PART OF ITEM 4)**	2
11	225958	BEAM SPACER LSS-25K**(PART OF ITEM 4)**	4
12	225959	PIVOT BOLT SLEEVE LSS-25K **(PART OF ITEM 4)**	2
13	239294	AIR SPRING F/S W01-358-9307 **(PART OF ITEM 4)**	2
14	225963	HARDWARE KIT AIR SPRING **(PART OF ITEM 4)**	2
15	225969	PIVOT HARDWARE KIT LSS-25K **(W/O-BUSHING)**	2
16	225970	PIVOT HARDWARE KIT W/BUSHING **(PART OF ITEM 4)**	2
17	238568	LOWER LH SHOCK MNT WLDMT **(PART OF ITEM 3)**	1
18	238569	LOWER RH SHOCK MNT WLDMT **(PART OF ITEM 3)**	1
19	238565	U-BOLT KIT LSS-25-RLU/RLY **(PART OF ITEM 3)**	1
20	3-181-010034-1	CLAMP CONDUIT STEEL 1/2 **(DISC BRAKE AXLES, REQ 5 EACH)** **(DRUM BRAKE AXLES, REQ 6 EACH)**	- -
21	3-181-010034-2	CLAMP CONDUIT STEEL 3/4 **(DRUM BRAKE)**	4

Eastern Wreker Sales Inc

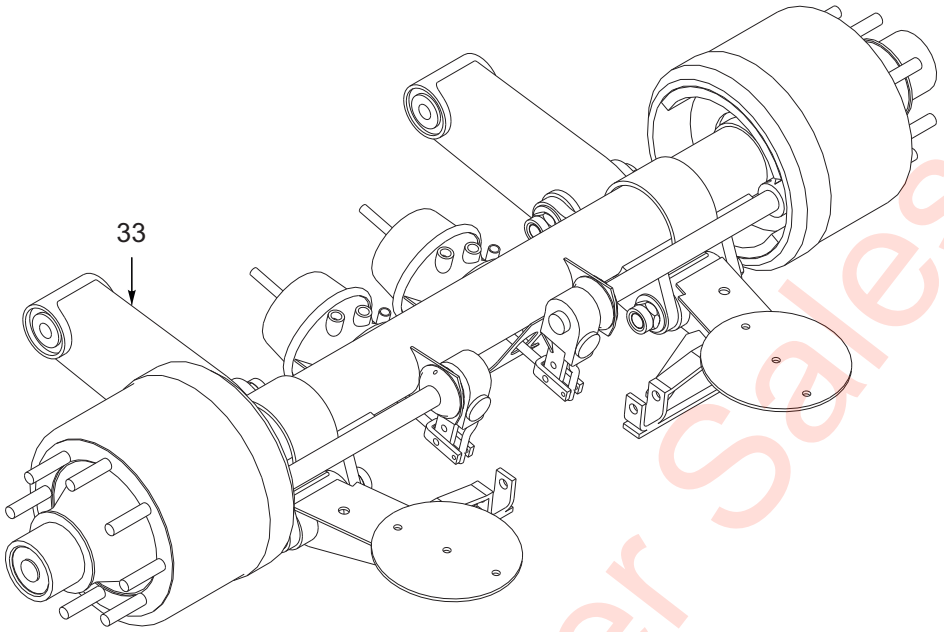

VIEW OF RLU-228-3.5, 12.25 X 7.5 DRUM BRAKES

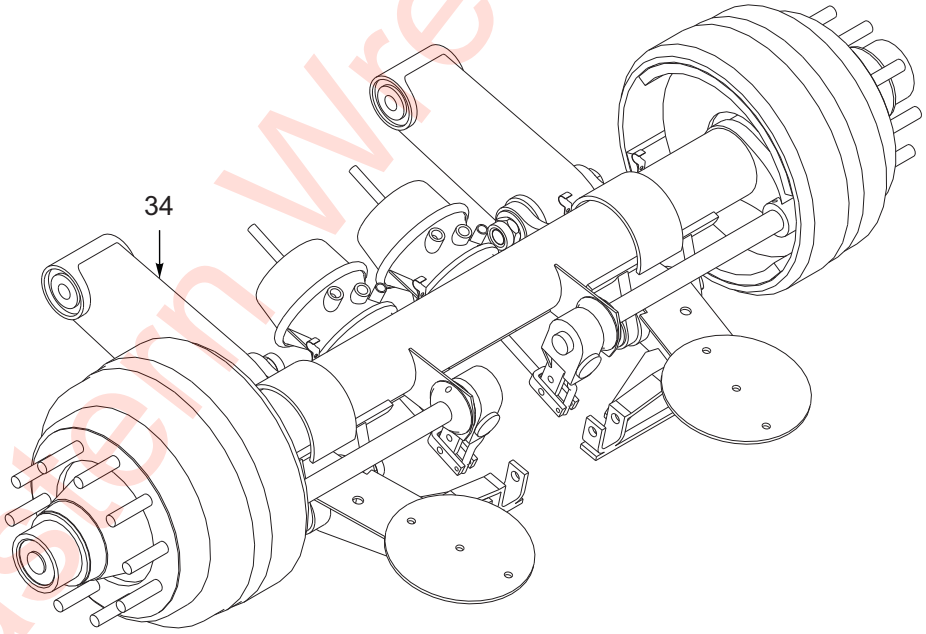

VIEW OF RLU-228-5.5, 16.5 X 7 DRUM BRAKES

Figure 1-47: Suspension Hanger, 12.25 and 16.5 Drum Brake, RLU-228 (1 of 2)

Eastern Wrecker Sales Inc

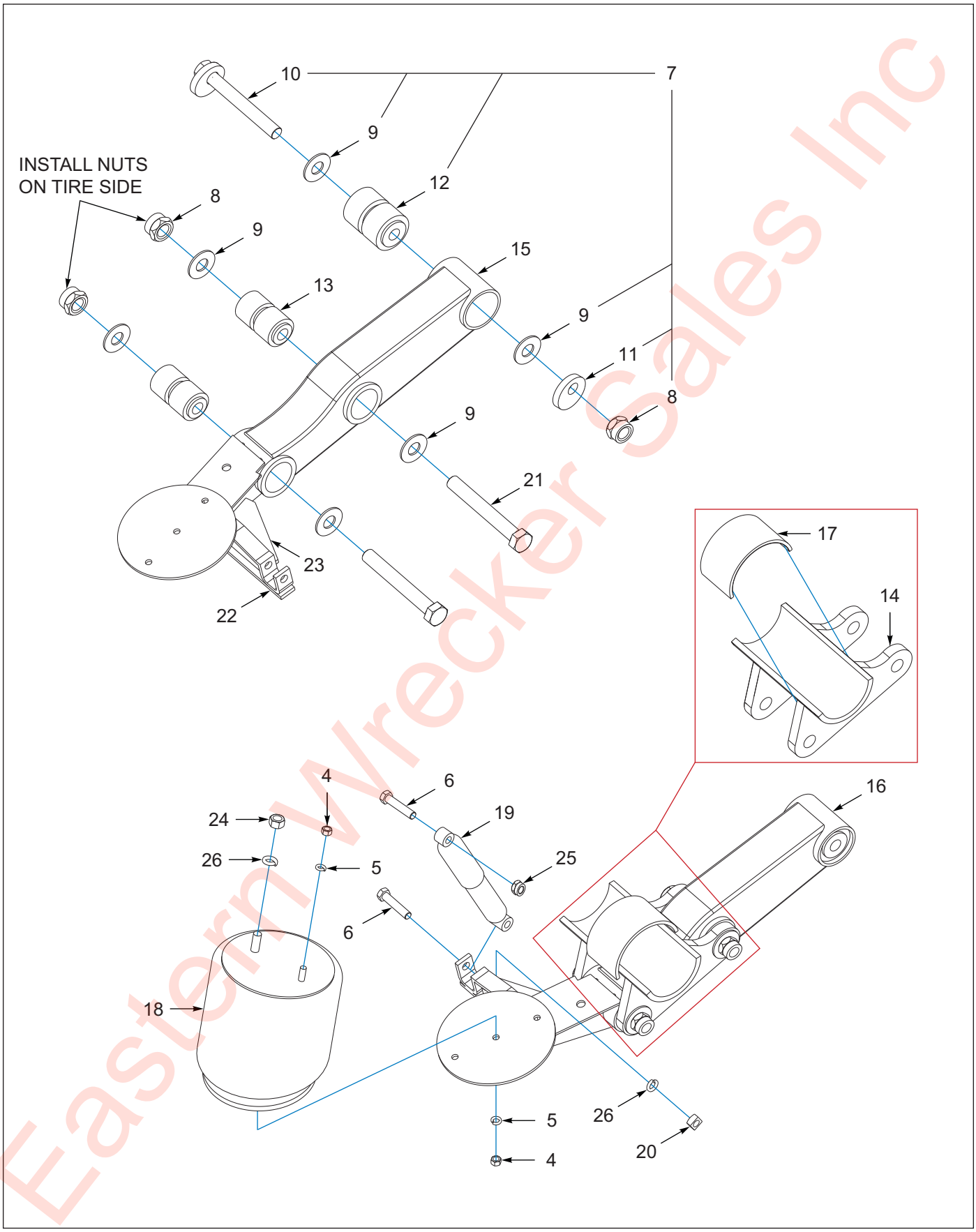

Eastern Wrecker Sales Inc

Figure 1-48: Suspension Hanger, 12.25 and 16.5 Drum Brake, RLU-228 (2 of 2)

Suspension Hanger, 12.25 and 16.5 Drum Brake, RLU-228

ITEM	PART NUMBER	DESCRIPTION	QTY
	214413	SUSP 440B 102 2512-70.5 GROTE **(USES ITEM 2)**	- -
	214422	SUSP 440B CA 102 2512-70.5 **(USES ITEM 2)**	- -
	214426	SUSP,440B-102 2516 GROTE **(USES ITEM 3)**	- -
1	102361	SUSPENSION,BEAM RLU-228 **(INCLUDES ITEMS 8-9, 12-17, 21-23)**	- -
2	102363	SUSPENSION,ADJ RLU-228-3.5 **(INCLUDES ITEMS 4-12, 18-20, 24-32) (12.25 X 7.5 BRAKES)**	- -
3	102364	SUSPENSION,ADJ RLU-228-5.5 **(INCLUDES ITEMS 4-12, 18-20, 24-32) (16.5 X 7 BRAKES)**	- -
4	1-512-010007-09	NUT, HEX 1/2-13 GR2 ZP	4
5	1-861-010034-13	WASHER, LKG HLCL SPR, 1/2	4
6	105408	SCREW HXCP,3/4-10X3-1/2 GR8	4
7	109533	ALIGNMENT BLOCK ASSY#48100294 **(SERVICE KIT INCLUDES ITEMS 8-12)**	1
8	111008	NUT LOCK 1-1/8-7 NEWAY **(PART OF ITEM 7, INCLUDES 1 EACH)**	6
9	111010	WASHER FLAT NEWAY 90036177 **(PART OF ITEM 7, INCLUDES 2 EACH)**	12
10	129005	ALIGN BLOCK 90508019 **(PART OF ITEM 7, INCLUDES 1 EACH)**	2
11	129006	ALIGN BLOCK NON-WELD 90008238 **(PART OF ITEM 7, INCLUDES 1 EACH)**	2
12	900-08-139	BUSHING NEWAY AR-45 SUSPENSIO **(PART OF ITEM 7, INCLUDES 1 EACH)**	2
13	111011	RUBBER BUSH NEWAY 90008149	4
14	111012	AXLE ADAPTER NEWAY 90001200	2
15	111013	BEAM LH NEWAY 90516600	1
16	111014	BEAM RH NEWAY 90516601	1
17	111015	SAFETY STRAP NEWAY 90025288	2
18	111016	AIR SPRING NEWAY 90557159 **(16.5 X 7 BRAKES)**	2
18	905-57-129	SPRING AIR BAG AR-45 **(12.25 X 7.5 BRAKES)**	2
19	111017	SHOCK NEWAY 90044642 **(16.5 X 7 BRAKES)**	2
19	900 45 040	SHOCK ABSORBER AR93 **(12.25 X 7.5 BRAKES)**	2
20	111022	NUT,SQ 3/4-10 NEWAY 93400367	2
21	111023	SCREW 1-1/8-7 NEWAY 93201051	4
22	126900	BRACKET BTM SHOCK ARU93	2
23	221602	GUSSET SHOCK LOWER TRL	2
24	934 00 149	HEX NUT 3/4-16 NEWAY AR-75-9	2
25	934-00-492	LOCK NUT 3/4-10	2
26	936 00 077	LOCK WASHER 3/4	4
27	111018	ANCHOR,RIDE HT NEWAY 90054038 **(NOT SHOWN)**	1
28	-----	LITERATURE LABEL **(NOT SHOWN)**	1
29	-----	LITERATURE LABEL **(NOT SHOWN)**	1
30	-----	LITERATURE FORM 864 **(NOT SHOWN)**	1
31	-----	LITERATURE SPEC **(NOT SHOWN)**	1
32	-----	LITERATURE INSTRUCTIONS **(NOT SHOWN))**	1
33	121077	AXLE WLDMT 2512SPG 70.5X36 TIS **(12.25 X 7.5 BRAKES)**	2
34	115738	AXLE WLDMT 2516SPG 69X31 TIS **(16.5 X 7 BRAKES)**	2
35	3-181-010034-1	CLAMP CONDUIT STEEL 1/2 **(NOT SHOWN)**	6
36	3-181-010034-2	CLAMP CONDUIT STEEL 3/4 **(NOT SHOWN)**	4

Eastern Wholesale Sales Inc

Table provided for general use.

NOTES:

Eastern Wrecker Sales Inc

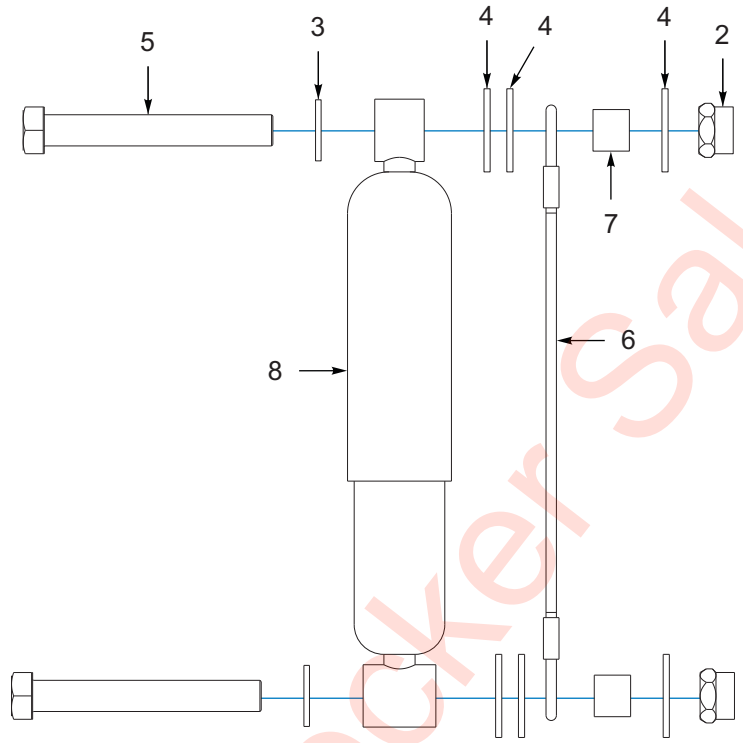

Figure 1-49: Shock Strap, Limit, LSS-25K-3.5

Shock Strap, Limit, LSS-25K-3.5

ITEM	PART NUMBER	DESCRIPTION	QTY
	223231	4 SHOCK STRAP KITS FOR 2 AXLES **(INCLUDES ITEM 1, 4 EACH)**	- -
	223232	6 SHOCK STRAP KITS FOR 3 AXLES **(INCLUDES ITEM 1, 6 EACH)**	- -
	228953	WR STRAP KIT 1 AX LSS-25K-3.5 **(INCLUDES ITEM 1, 2 EACH)**	- -
1	223230	STRAP SHOCK LIMITLSS-25K-3.5 **(KIT INCLUDES ITEMS 2-7)**	- -
2	1-512-010005-15	NUT,HEX,SLFLKG GRB 3/4-10	2
3	1-861-010032-20	WASHER, FLAT,3/4 N ZP/CD	2
4	1-861-010032-21	WASHER, FLAT 3/4 W ZP/CD	6
5	139201	SCREW,HX CP 3/4-10UNCX5.50GR8	2
6	228951	WIRE ROPE STRAP LSS-25K-3.5	1
7	228952	TUBE RD 1 OD X .782 ID X 7/8	2
8	225955	SHOCK ABSORBER M85323 **(NOT INCLUDED)**	1

Eastern Wrecker Sales Inc

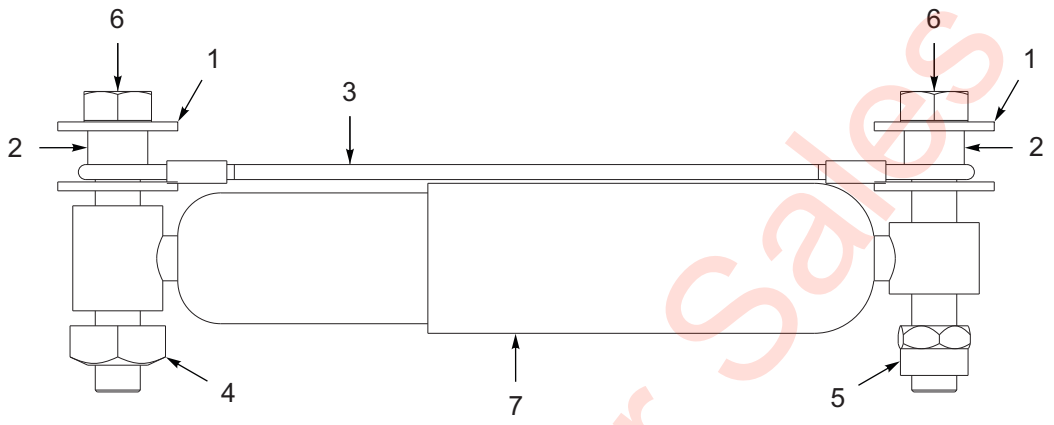

Figure 1-50: Shock Strap, Limit, RLU-228-3.5 & 5.5

Shock Strap, Limit, RLU-228-3.5 & 5.5

ITEM	PART NUMBER	DESCRIPTION	QTY
	141708	WIRE ROPE STRAPKIT RLU228-3.5 **(INCLUDES ITEMS 1-3, 6)**	- -
	127708	STRAP,SHOCK LMT,RLU250&228-5.5 **(INCLUDES ITEMS 1-3, 6)**	- -
1	1-861-010032-21	WASHER, FLAT 3/4 W ZP/CD	8
2	170120	TUBE, RD 1 ODX .782 ID X 11/16	4
2	179107	WIRE ROPE STRAP, RLU 228-3.5 **(PART OF 141708)**	2
3	179108	WIRE ROPE STRAP, RLU 228-5.5 **(PART OF 127708)**	2
4	934-00-367	NUT SQ 3/4-10 **(NOT INCLUDED)**	2
5	934-00-492	LOCK NUT 3/4-10 **(NOT INCLUDED)**	2
6	W908406-4	SCREW 3/4-10X4-1/2 HEX HD CAP	4
7	111017	SHOCK NEWAY 90044642 **(NOT INCLUDED)** **(FOR RLU-228-5.5 SUSPENSION)**	1
7	900 45 040	SHOCK ABSORBER AR93 **(NOT INCLUDED)** **(FOR RLU-228-3.5 SUSPENSION)**	1

Eastern Wrecker Sales Inc

IMPORTANT: IF ORDERING TIRE ASSEMBLIES OR REPLACEMENT WHEELS, PROVIDE THE DEALER WITH THE TRAILER VIN NUMBER TO PROPERLY IDENTIFY ORIGINAL PARTS.

MAIN CHARACTERISTICS TABLE:

ITEM	WHEEL	STUDS	BOLT PATTERN	HUB BORE	OFFSET
1	17.5 X 6.75	8	10.827 (275 MM)	8.70 (221.1 MM)	5.55
2	17.5 X 6.75	8	10.827 (275 MM)	9.00 (228.6 MM)	5.60
3	22.5 X 7.50	10	11.25 (285.75 MM)	8.66 (220 MM)	6.45
4	22.5 X 7.50	10	11.25 (285.75 MM)	8.78 (223 MM)	6.44
5	22.5 X 8.25	10	11.25 (285.75 MM)	8.66 (220 MM)	6.59
6	22.5 X 8.25	10	11.25 (285.75 MM)	8.66 (220 MM)	6.60
7	22.5 X 8.25	10	11.25 (285.75 MM)	8.66 (220 MM)	6.62

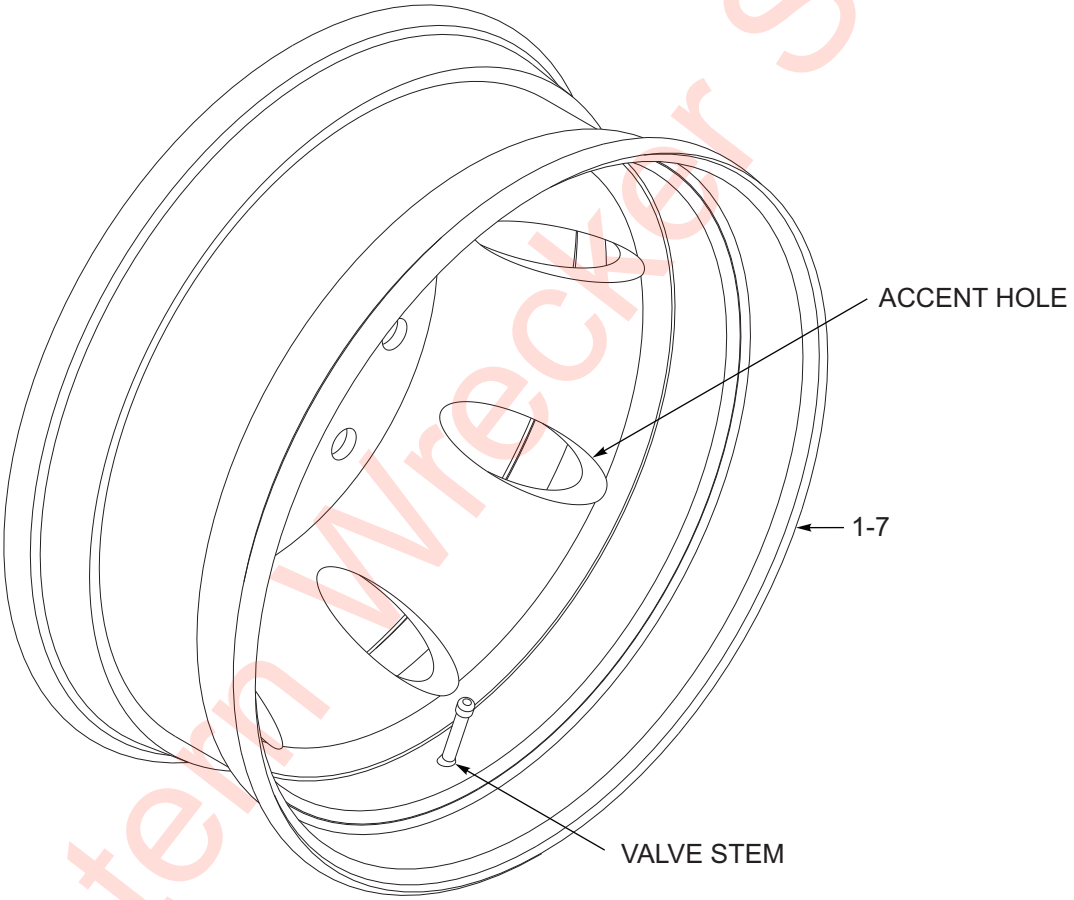

8 ACCENT HOLE WHEEL SHOWN AS REFERENCE:

NOT SHOWN: #8 VALVE STEM EXTENSION (OPTION)

Eastern Wrecker Sales Inc

Figure 1-51: Wheels

Wheels

ITEM	PART NUMBER	DESCRIPTION	QTY
1	100402	WHEEL POL ALUM PILOT17.5X6.75 **(USES TR-553C VALVE STEM) (8 ACCENT HOLES, POLISHED, ALUMINUM) (ALCOA, ACCURIDE)**	1
1	112047	WHEEL AL PILOT 17.5X6.75 MACH **(USES 100401 VALVE STEM) (8 ACCENT HOLES, MACHINED, ALUMINUM)**	1
1	232809	WHEEL AL PILOT 17.5X6.75 (POL) **(USES 238615 VALVE STEM) (8 ACCENT HOLES, POLISHED, ALUMINUM) (FLEETSIDE)**	1
1	223938	WHEEL AL PILOT 17.5X6.75 POL **(USES 236462 VALVE STEM) (10 ACCENT HOLES, POLISHED, ALUMINUM) (FLEETSIDE)**	1
2	224322	WHEEL AL PLT MT 17.5X6.75 D-BT **(USES 100401 VALVE STEM) (8 ACCENT HOLES, POLISHED, ALUMINUM) (DURA-BRIGHT)**	1
2	230730	WHEEL DISC PLT MNT 17.5X6.75 **(USES TR500 VALVE STEM) (4 HAND HOLES, PAINTED BLACK, STEEL)**	1
2	3-870-010097	WHEEL,DISC,PILOT MT 17.5X6.75 **(USES TR500 VALVE STEM) (4 ACCENT HOLES, PAINTED WHITE, STEEL)**	1
3	139600	WHEEL,AL DURA BRITE255/70R **(USES TR545D VALVE STEM) (10 ACCENT HOLES, POLISHED, ALUMINUM)**	1
3	3-870-010106	WHEEL,AL,PILOT MT22.5X7.5POL **(USES TR545D VALVE STEM) (10 ACCENT HOLES, POLISHED, ALUMINUM)**	1
3	3-870-010116	WHL,ALM,PLT MT 22.5X7.50 **(USES TR545D VALVE STEM) (10 ACCENT HOLES, UNPOLISHED, ALUMINUM)**	1
4	3-870-010104	WHEEL,DISC PILOT MT 22.5X7.50 **(USES TR500 VALVE STEM) (5 ACCENT HOLES, PAINTED WHITE, STEEL)**	1
5	111416	WHEEL ALUM PLT 22.5X8.25 POL **(USES TR545D VALVE STEM) (8 ACCENT HOLES, POLISHED, ALUMINUM)**	1
5	111417	WHEEL,ALUM,PLT 22.5X8.25 MACH **(USES TR545D VALVE STEM) (8 ACCENT HOLES, MACHINED ALUMINUM)**	1
5	134757	WHEEL AL PLT22.5X8.25 POL CTG **(USES TR545D VALVE STEM) (8 ACCENT HOLES, POLISHED COATING, ALUMINUM)**	1
6	150346	WHEEL,ALUM,DURA-BRT22.5X8.25 **(USES TR545D VALVE STEM) (8 ACCENT HOLES, POLISHED, ALUMINUM)**	1
7	111652	WHEEL,PILOT MT 22.5X8.25, PP **(USES TR573D VALVE STEM) (10 HAND HOLES, SPECIFY BLACK OR SILVER STEEL)**	1
7	3-870-010110	WHEEL,DISC,PILOT MT 22.5X8.25 **(USES TR573 VALVE STEM) (5 ACCENT HOLE, PAINTED WHITE, STEEL)**	1
8	1-843-010014	VALVE EXTENSION,STEM **(3 INCH) (OPTION)**	1

Eastern Truck Sales Inc

Axle Brakes

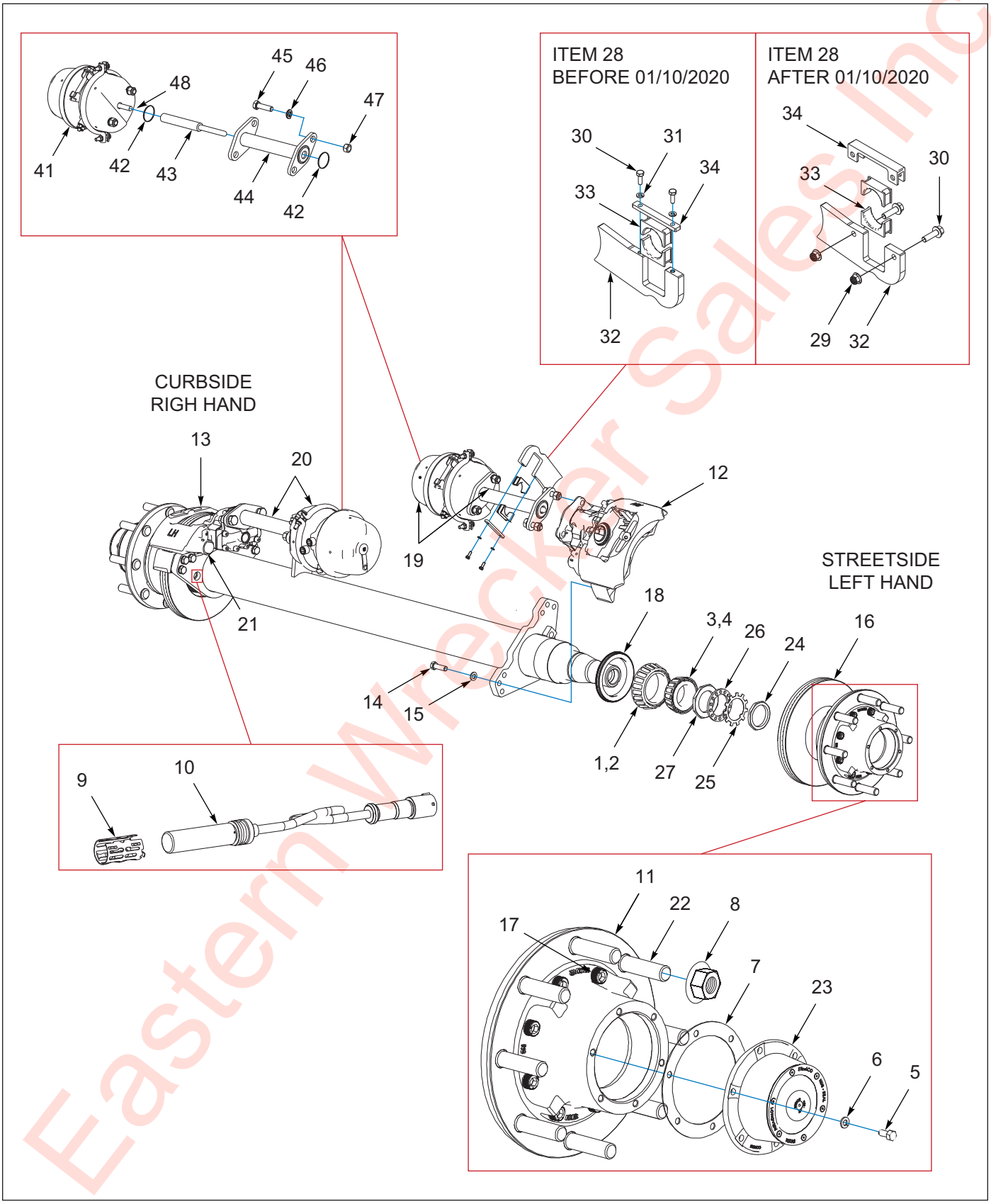

Eastern Wrecker Sales Inc

Figure 1-52: Axle 12.25 Disc Brakes & Hub Assembly, Dexter (OPTION) (1 of 2)

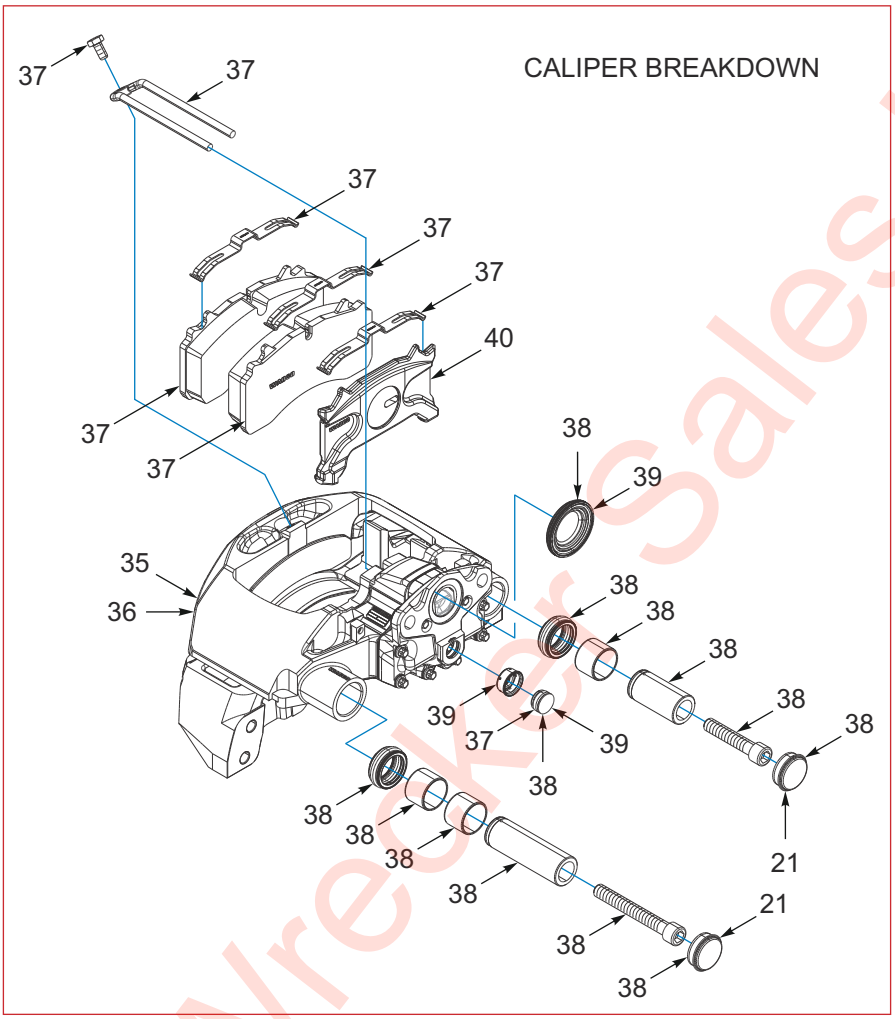

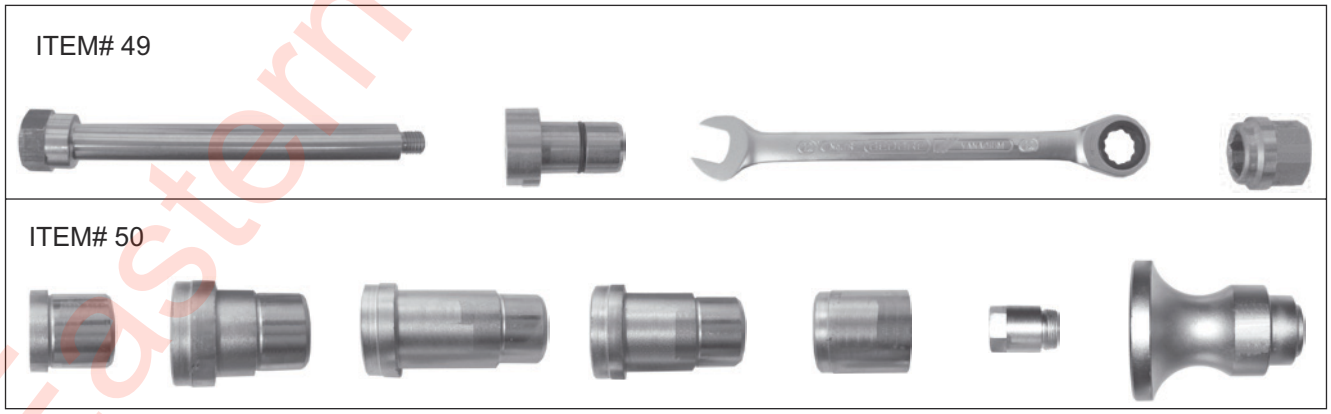

Figure 1-53: Axle 12.25 Disc Brakes & Hub Assembly, Dexter (OPTION) (2 of 2)

Eastern Wrecker Sales Inc

Axle 12.25 Disc Brakes & Hub Assembly, Dexter (OPTION)

ITEM	PART NO.	DESCRIPTION	QTY.
	218106	AXLE 12.25 DSC 70.5 25K TIS	- -
	220693	AXLE 12.25 DSC 88-1/2 25K TIS	- -
1	HM218210	BEARING CUP,INNER-DEXTERD225K	2
2	HM218248	INNER BEARING	2
3	HM212011	OUTER CUP	2
4	HM212049	OUTER BEARING CONE	2
5	1-654-010049-03	SCREW HX CP 5/16-18UNCX3/4GR5	12
6	1-861-010034-10	WASHER,LKG 5/16	12
7	153402	GASKET HUB **(3067)**	2
8	179955	NUT,FLANGE MM22X1.5 (1.50HEX) **(179933, 153408)**	16
9	153409	SPRING CLIP ABS	2
10	220673	SENSOR ABS STRAIGHT IM CABLE	2
11	223993	HUB DISC PAN17 (NO ROTOR) **(INCLUDES ITEMS 1, 3)**	2
12	223994	CALIPER DISC PAN17 LH **(INCLUDES ITEMS 35, 37-40)**	1
13	223997	CALIPER DISC PAN17 RH **(INCLUDES ITEMS 36-40)**	1
14	223995	BOLT M14-1.5X45MM GR 10.9	12
15	223996	WASHER 14MM SPLIT LOCK	12
16	223998	ROTOR DISC PAN 17.5 (NO HUB)	2
17	224002	BOLT SCHS M14-2X60MM GR 12.9	16
18	224003	SEAL SCOTSEAL F22	2
19	225965	EXT SHAFT ASSY AIR CHAMBER LH **(INCLUDES ITEMS 41-47)**	1
20	225977	EXT SHAFT ASSY AIR CHAMBER RH **(INCLUDES ITEMS 41-47)**	1
21	230657	SOFT PLUG TIN CALIPER	4
22	232823	STUD M22X1.5X3.97 DXT DSC BK	16
23	4009	BOLT ON HUB CAP W/PLUG **(OIL CAP INCLUDES VENT PLUG AND ITEM 7)**	2
24	006-115-00	NUT OUTER, SPINDLE, DEXTER **(153365, 103102-001)**	2
25	105106	STAR L/W **(005-099-00)**	2
26	105107	LOCK WASHER **(005-098-00)**	2
27	103103-002	NUT INNER SPINDLE DEXTER **(006-114-00)**	2
28	225978	SUPPORT BLOCK ASSY **(BEFORE 01/10/2020) (INCLUDES ITEMS 33-37)**	2
28	231958	SUPPORT BLOCK EXT SHAFT ASSY **(AFTER 01/10/2020)** (INCLUDES ITEMS 32-33, 35-37)	2
29	1-510-010001	NUT, FLANGE 3/8-16UNC GR5 ZNK **(AFTER 01/10/2020)**	4
30	1-654-010051-05	SCREW,HEX CAP 3/8-16UNCX1 GR5 **(BEFORE 01/10/2020)**	4
30	1-654-010051-06	SCREW,HEX CAP 3/8-16UNCX1-1/4 **(AFTER 01/10/2020)**	4
31	1-861-010034-11	WASHER, LKG HLCL SPR, 3/8 **(BEFORE 01/10/2020)**	4
32	-----	SUPPORT BLOCK **(BEFORE 01/10/2020)**	2
32	223999	SUPPORT BLOCK **(AFTER 01/10/2020)**	2
33	-----	SPLIT BUSHING **(BEFORE 01/10/2020) (2 PER SUPPORT BLOCK)**	4
33	224000	SPLIT BUSHING **(AFTER 01/10/2020) (2 PER SUPPORT BLOCK)**	4
34	-----	SUPPORT CAP **(BEFORE 01/10/2020)**	2
34	224001	SUPPORT CAP **(AFTER 01/10/2020)**	2
35	236534	CALIPER DISC PAN17 LH NO PADS	1
36	236535	CALIPER DISC PAN17 RH NO PADS	1
37	224005	PAD KIT PAN17 DISC BRAKE 1 AX **(1 KIT PER AXLE)**	1
38	236536	GUIDE BOLT & SEAL KIT PAN 17 **(PER CALIPER)**	1
39	236537	SEAL KIT CLAMPING UNIT **(PER CALIPER)**	1
40	236538	PRESSURE PLT DSCBKCALIPR PAN17 **(PER CALIPER)**	1
41	238558	AIR CHAMBER PAN 17 DSC BK	2

Eastern Trailer Sales Inc

Axle 12.25 Disc Brakes & Hub Assembly, Dexter (OPTION)

ITEM	PART NO.	DESCRIPTION	QTY.
42	238559	O-RING 1-7/8"IDX2-1/8"ODX.139"	2
43	238560	SHAFT CHAMBER EXTENSION	2
44	238562	EXTENSION TUBE WLDMT	2
45	238563	SCREW 5/8-12 X 2" UNF	2
46	1-861-010034-15	WASHER,LKG,HLCL SPR,5/8	2
47	238564	NUT JAM 5/8-18 UNF GR8	2
48	#242 LOCKTITE	LOCKTITE 242 BLUE REMOVABLE**(50ML BOTTLE) (NOT SHOWN)**	1
49	236504	TOOL KIT PAN 17/19/22 BASIC	1
50	225964	TOOL KIT WABCO PAN17 DISC	1

Eastern Wrecker Sales Inc

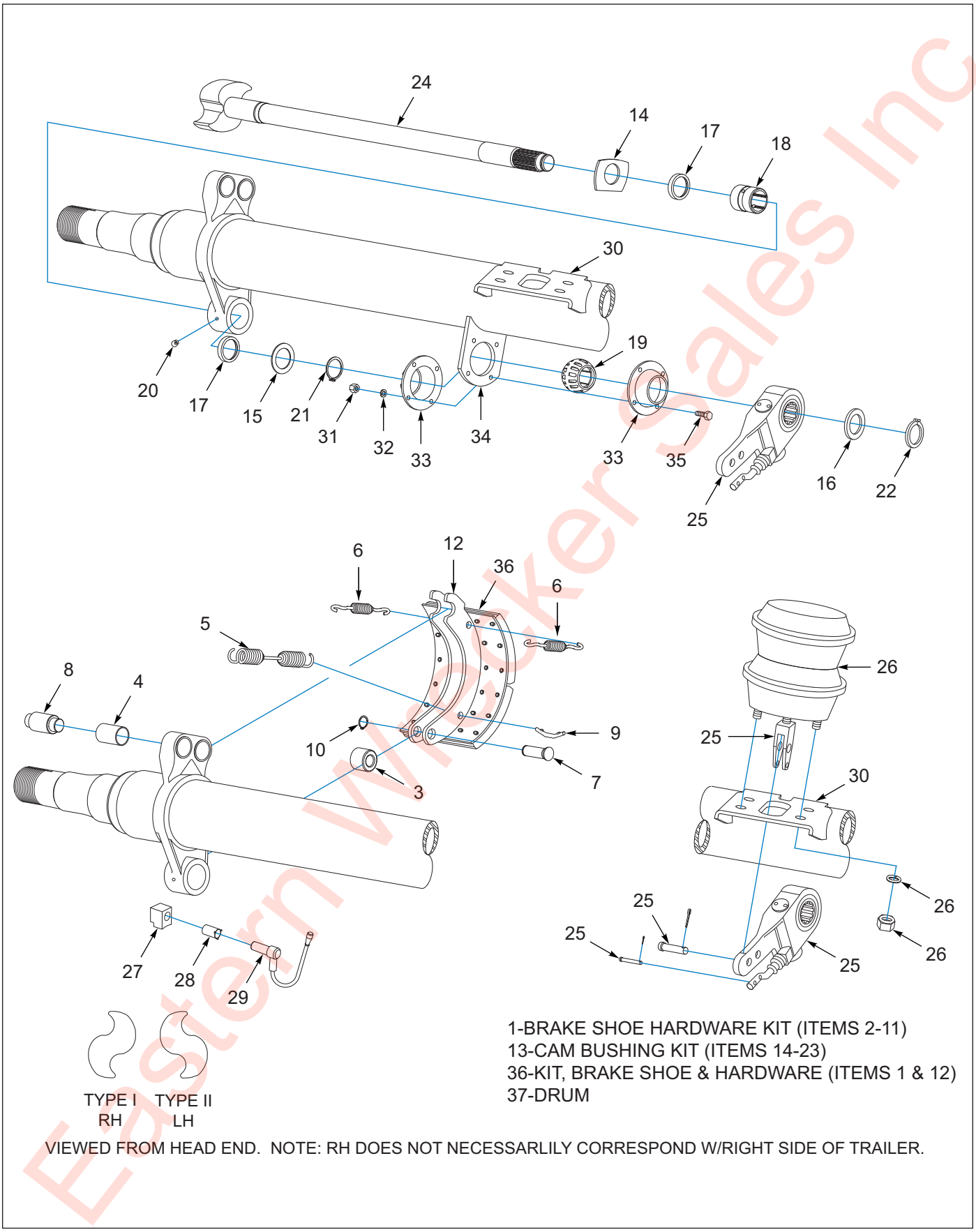

Eastern Wrecker Sales Inc

Figure 1-54: Axle 12.25 x 7.5 Drum Brakes, Dexter

Axle 12.25 x 7.5 Drum Brakes, Dexter

ITEM	PART NO.	DESCRIPTION	QTY.
	212378	AXLE 70.5 12.25SPG 25K TIS **(REPLACED 115703 AFTER 06/16/2018)**	- -
	212379	AXLE 70.5 12.25SPG 25K GRS TIS **(REPLACED 173874, 195522 AFTER 06/16/2018)**	
	212381	AXLE 77, 12.25 X 7.5 SPG BRK - 25K **(REPLACED 115704,136203 AFTER 06/16/2018)**	- -
	212383	AXLE 88.5, 12.25 X 7.5 SPG BRK - 25K **(REPLACED 133794 AFTER 06/16/2018)**	- -
1	K71-460-00	BRAKESHOE HDW KIT PQ BRKS DEX **(INCLUDES ITEMS 2-11)**	2
2	403149	WASHER RETAINER **(NOT SHOWN) (ITEM 1 INCLUDES 2 EACH)**	4
3	204108-001	ROLLER **(014-057-00) (ITEM 1 INCLUDES 2 EACH)**	4
4	014-068-00	BUSHING-SPIDER ANCHOR PIN DXTR **(ITEM 1 INCLUDES 2 EACH)**	4
5	208106	SPRING BRAKE RETRACT **(ITEM 1 INCLUDES 1 EACH)**	2
6	046-097-00	SPRING-BRAKE SHOE KEEPER DEXTR **(ITEM 1 INCLUDES 2 EACH)**	4
7	205107-001	BRAKE SHOE PIN STANDARD **(ITEM 1 INCLUDES 2 EACH)**	4
8	056-017-00	ANCHOR PIN-BRAKE SHOE DEXTER **(ITEM 1 INCLUDES 2 EACH)**	4
9	056-018-00	RETAINER-RETRACTOR SPRING DXTR **(ITEM 1 INCLUDES 2 EACH)**	4
10	214102	ROLLER RETAINER **(ITEM 1 INCLUDES 2 EACH)**	4
11	-----	INSTRUCTION SHEET **(NOT SHOWN) (ITEM 1 INCLUDES 1 EACH)**	1
12	-----	SHOE LINING QUICK CHG ASSY	4
13	K71-101-00	CAM SHAFT REPAIR KIT PQ BRAKES **(I KIT PER BRAKE) (INCLUDES ITEMS 14-23)**	2
14	005-074-00	WASHER D-CAM DEXTER **(ITEM 13 INCLUDES 1 EACH)**	2
15	403149	WASHER RETAINER **(ITEM 13 INCLUDES 2 EACH)**	2
16	113819	CAMSHAFT WASHER 28 SPLINE **(ITEM 13 INCLUDES 1 EACH)**	2
17	408101-001	SPIDER SEALR **(ITEM 13 INCLUDES 2 EACH)**	4
18	405129	SPIDER BUSHING **(ITEM 13 INCLUDES 1 EACH)**	2
19	405999-001	NYLON BUSHING CAM BRKT ASSY **(ITEM 13 INCLUDES 1 EACH)**	2
20	061-003-00	GREASE FITTING-SPIDER DEXTER **(ITEM 13 INCLUDES 1 EACH)**	2
21	214104	CAM LOCK RING **(ITEM 13 INCLUDES 2 EACH)**	2
22	069-078-00	SNAP RING **ITEM 13 INCLUDES 1 EACH)**	2
23	-----	INSTRUCTION SHEET **(NOT SHOWN) (ITEM 13 INCLUDES 1 EACH)**	1
24	034-188-03	CAMSHAFT LH 28SPLINE 22-5/16 **(FOR 212378, 212379)**	1
24	034-189-03	CAMSHAFT RH 28SPLINE 22-5/16 (**FOR 212378, 212379)**	1
24	136991	CAM LH 28 SPLINE 23-3/8 **(FOR 212381)**	1
24	136992	CAM RH 28 SPLINE 23-3/8 **(FOR 212381)**	1
24	171963	CAMSHAFT LH 28 SPLINE 26-1/2 **(FOR 212383)**	
24	171964	CAMSHAFT RH 28 SPLINE 26-1/2 **(FOR 212383)**	
25	127777	SLACK ADJ AUTO 12-1/4X7-1/2 **(INCLUDES CLEVIS, PINS, GAGE & INSTRUCTIONS)**	2
26	138719	SPRING BRAKE TYPE 30/30	2
27	103805	ABS SENSOR BLOCK	2
28	144979	ABS SENSOR RETAINER CLIP	2
29	101847	ABS SENSOR CABLE-.4M (1FT) **(SENSOR & CABLE ASSEMBLY)**	2
30	034-048-00	BRACKET AIR CHAMBER MTG	2
31	1-512-010007-05	NUT, HEX 1/4-20 GR2 ZP	8
32	005-079-00	LOCK WASHER, DEXTER	8
33	034-032-00	RETAINING PLATE-CAMSHAFT DEXTR **(EACH HALF SOLD SEPERATELY)**	4
34	034-031-00	BRACKET ASSY-CAMSHAFT SUPT	2
35	007-139-00	BOLT RET CAM BUSHING DEXTER	8

Eastern Wholesale Inc

Axle 12.25 x 7.5 Drum Brakes, Dexter

ITEM	PART NO.	DESCRIPTION	QTY.
36	138054	KIT,BRAKE, 12 1/4X7 1/2 **(1 KIT PER AXLE)** **(INCLUDES 2 EACH OF ITEMS 1 & 12)**	1
37	63680	DRUM, BRAKE **(NOT SHOWN) (SEE DRUM & HUB ASSEMBLY)**	1

Eastern Wrecker Sales Inc

Table provided for general use.

NOTES:

Eastern Wrecker Sales Inc

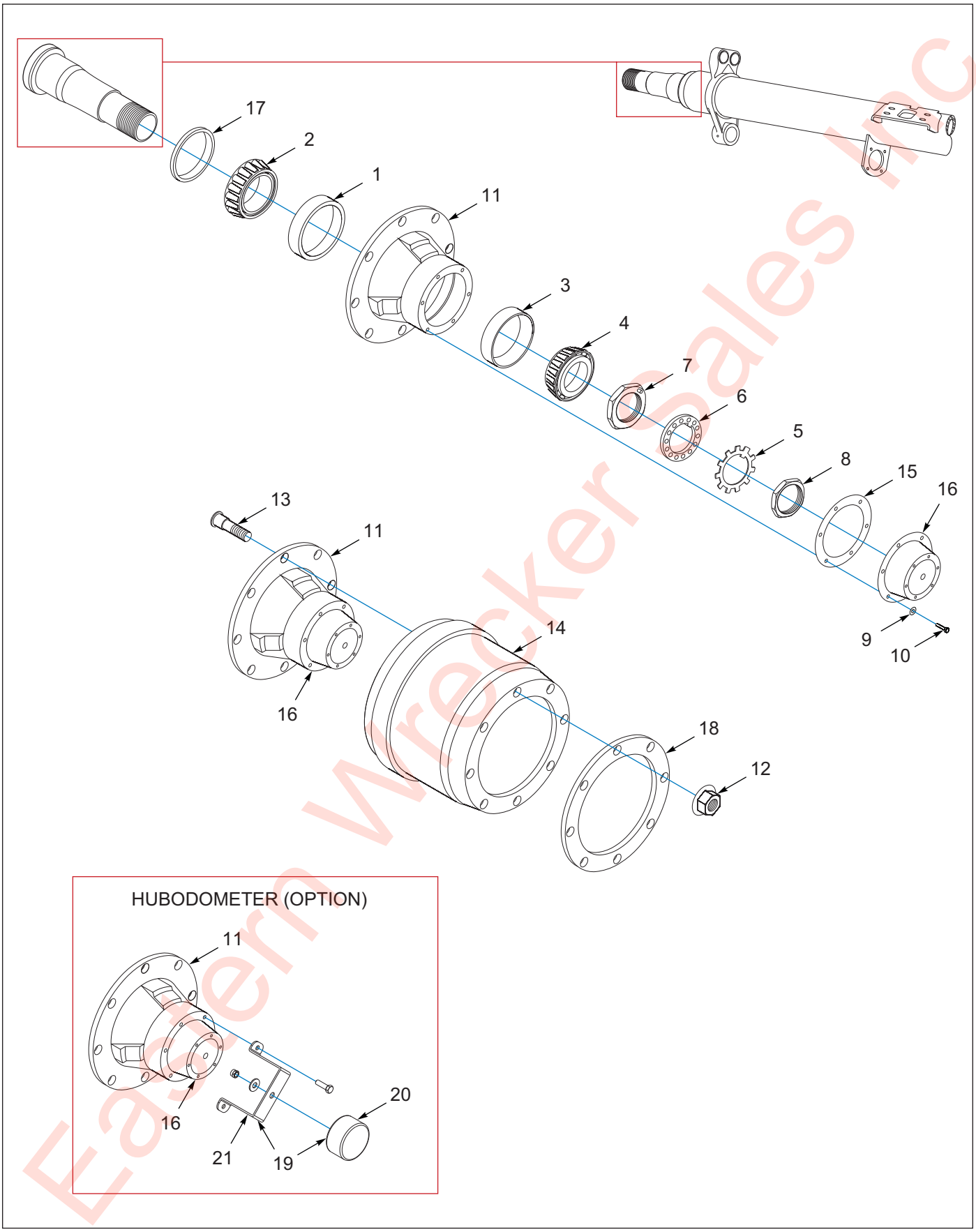

Eastern Wrecker Sales Inc

Figure 1-55: Axle 12.25 x 7.5 Drum and Hub Assembly

Axle 12.25 x 7.5 Drum and Hub Assembly, Dexter

ITEM	PART NUMBER	DESCRIPTION	QTY
	212378	AXLE 70.5 12.25SPG 25K TIS **(REPLACED 115703 AFTER 06/16/2018)**	- -
	212379	AXLE 70.5 12.25SPG 25K GRS TIS **(REPLACED 173874, 195522 AFTER 06/16/2018)**	- -
	212381	AXLE 77, 12.25 X 7.5 SPG BRK - 25K **(REPLACES 115704,136203 AFTER 06/16/2018)**	- -
	212383	AXLE 88.5, 12.25 X 7.5 SPG BRK - 25K **(REPLACES 133794 AFTER 06/16/2018)**	- -
1	HM218210	BEARING CUP,INNER-DEXTERD225K **(ITEM 11 INCLUDES 1 EACH)**	2
2	HM218248	INNER BEARING	2
3	HM212011	OUTER CUP **(ITEM 11 INCLUDES 1 EACH)**	2
4	HM212049	OUTER BRG A19S	2
5	105106	STAR L/W **(005-098-00)**	2
6	105107	LOCK WASHER **(005-099-00)**	2
7	103103-002	NUT INNER SPINDLE DEXTER **(006-114-00)**	2
8	006-115-00	NUT OUTER, SPINDLE, DEXTER **(103102-001)**	2
9	1-861-010034-10	WASHER,LKG 5/16	12
10	1-654-010049-03	SCREW HX CP 5/16-18UNCX3/4GR5	12
11	112492	HUB 8 BOLT ABS 100 TOOTH **(INCLUDES ITEMS 1, 3, 13 AND 100 TOOTH TONE RING)**	2
12	179955	NUT,FLANGE MM22X1.5 (1.50HEX) **(179933, 153408)**	16
13	113536	STUD RH 22MM 3.5 STANDOUT **(131069)** **(ITEM 11 INCLUDES 8 EACH)**	16
14	63680	DRUM, BRAKE	2
15	3067	GASKET HUB **(153402)**	2
16	4009	BOLT ON HUB CAP W/PLUG **(OIL CAP INCLUDES VENT PLUG AND ITEM 15, 1 EACH)**	2
17	3-659-010012	SEAL, AXLE	2
18	114619	WHEEL GUARD 8 HOLE 275MM BC **(USED ONLY TO SEPARATE STEEL RIM OR DRUM FROM ALUMINUM RIM)**	2
19	142550	HUBODOMETER INSTALL 235/17.5 **(650RPM)** **(OPTION INCLUDES ITEMS 20, 21)**	1
20	142547	HUBODOMETER 650 RPM **(OPTION)**	1
21	197606	BRACKET HUBODOMETER 4"H TIS **(OPTION)**	1

Eastern Trailer Sales Inc

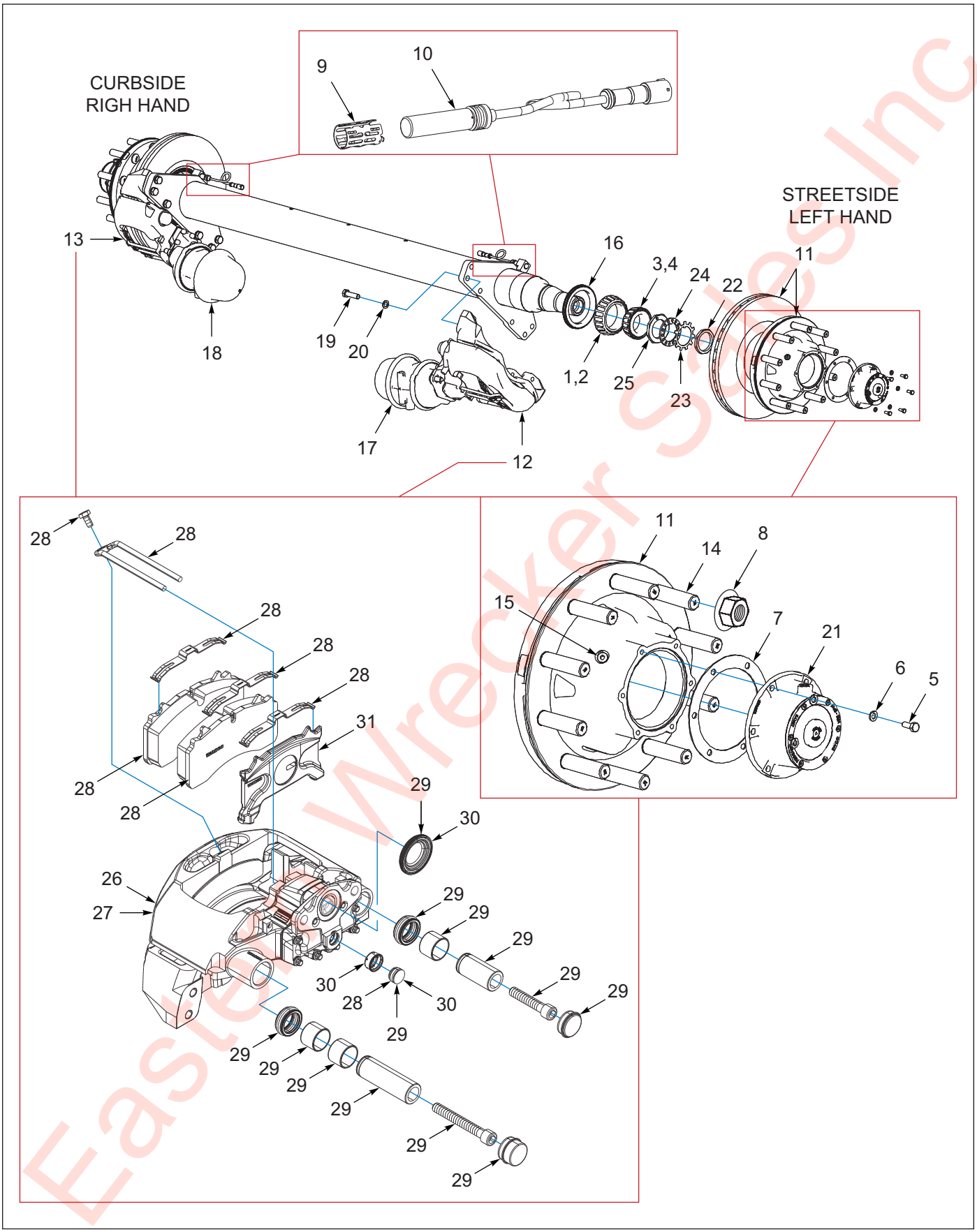

Figure 1-56: Axle 16.5 Disc Brakes & Hub Assembly, Dexter (OPTION) (1 of 2)

Eastern Wrecker Sales Inc

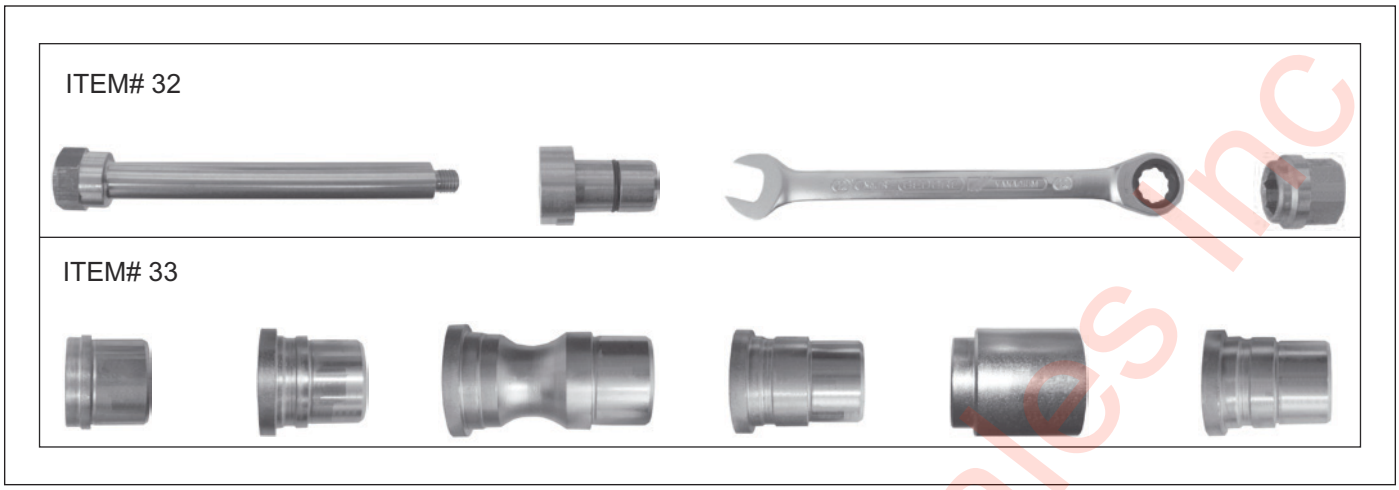

Figure 1-57: Axle 16.5 Disc Brakes & Hub Assembly, Dexter (OPTION) (2 of 2)

Axle 16.5 Disc Brakes & Hub Assembly, Dexter (OPTION)

ITEM	PART NUMBER	DESCRIPTION	QTY
	228027	AXLE 69 PAN 22 DISC 25K TIS	- -
	228029	AXLE 75 PAN 22 DISC 25K TIS	- -
1	HM218210	BEARING CUP,INNER-DEXTERD225K	2
2	HM218248	INNER BEARING	2
3	HM212011	OUTER CUP	2
4	HM212049	OUTER BEARING CONE	2
5	1-654-010049-03	SCREW HX CP 5/16-18UNCX3/4GR5	12
6	1-861-010034-10	WASHER,LKG 5/16	12
7	153402	GASKET F22 **(3067)**	2
8	153408	NUT, FLANGE M22 X 1.5 **(179955, 179933**)	20
9	153409	SPRING CLIP ABS	2
10	220673	SENSOR ABS STRAIGHT IM CABLE	2
11	235222	HUB/ROTOR ASSY PAN22 DSC	2
12	236498	CALIPER PAN22 LH ADB **(INCLUDES ITEMS 29, 31-34)**	1
13	236499	CALIPER RAN22 RH ADB **(INCLUDES 30-34)**	1
14	236497	STUD M22 X 1.5 X 4.79"	20
15	224002	BOLT SCHS M14-2X60MM FR 12.9	2
16	224003	SEAL SCOTSEAL F22 (46305)	2
17	236475	BRAKE CHAMBER LH DXT 16.5 DSC **(INCLUDES MOUNT NUTS)**	1
18	236476	BRAKE CHAMBER RH DXT 16.5 DSC **(INCLUDES MOUNT NUTS)**	1
19	236500	BOLT HHCS M16-1.5X55MM GR10.9	12
20	236501	LOCK WASHER 16MM SPLIT	12
21	4009	HUB CAP VENTED **(153403)**	2
		(OIL CAP INCLUDES VENT PLUG AND ITEM 7)	
22	006-115-00	SPINDLE NUT OUTER **(006-115-00, 153365)**	2
23	105106	STAR WASHER **(153368, 005-098-00)**	2
24	153366	SPINDLE WASHER **(105107, 005-098-00)**	2
25	103103-002	SPINDLE NUT INNER **(153367, 006-114-00)**	2
26	238554	CALIPER DISC PAN22 LH NO PADS	1
27	238555	CALIPER DISC PAN22 RH NO PADS	1
28	235221	PAD KIT PAN22 DSC 1AX **(1 KIT PER AXLE)**	1

Eastern Wecker Sales Inc

Axle 16.5 Disc Brakes & Hub Assembly, Dexter (OPTION)

ITEM	PART NUMBER	DESCRIPTION	QTY
29	238556	GUIDE BOLT & SEAL KIT PAN22 **(PER CALIPER)**	1
30	236537	SEAL KIT CLAMPING UNIT **(PER CALIPER)**	1
31	238557	'PRESSURE PLT DSCBKCALIPRPAN22 **(PER CALIPER)**	1
32	236504	TOOL KIT PAN 17/19/22 BASIC	1
33	236503	TOOL KIT PAN19/22 ADDITIONAL	1

Eastern Wrecker Sales Inc

Table provided for general use.

NOTES:

Eastern Wrecker Sales Inc

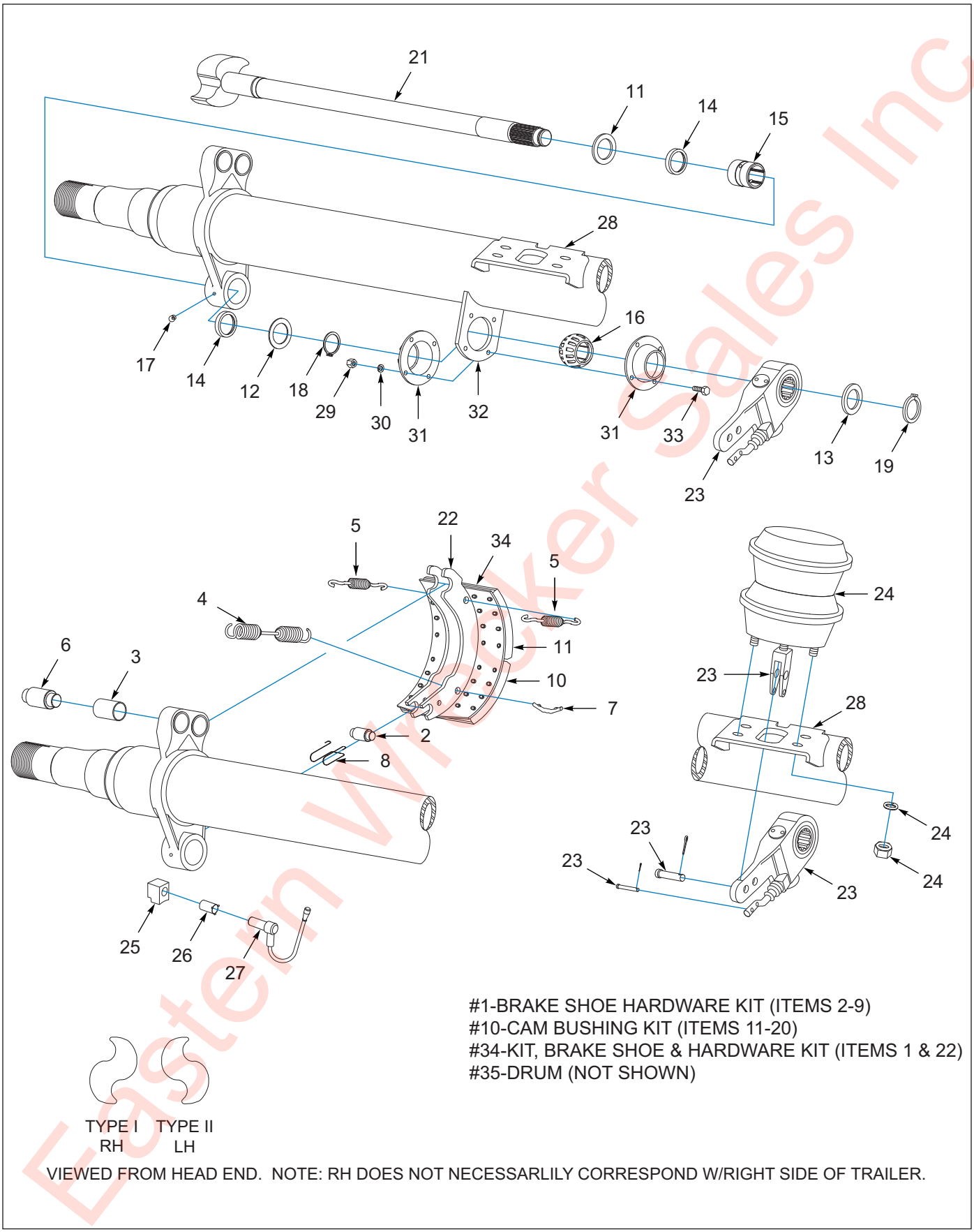

Eastern Wrecker Sales Inc

Figure 1-58: Axle 16.5 x 7 Drum Brakes, Dexter

Axle 16.5 x 7 Drum Brakes, Dexter

ITEM	PART NUMBER	DESCRIPTION	QTY
	212418	AXLE 69, 16.5 X 7 SPG BRK - 25K **(REPLACED 115713, 138203 AFTER 06/16/2018)**	- -
	212421	AXLE 75, 16.5 X 7 SPG BRK - 25K **(REPLACED 115715, 138955 AFTER 06/16/2018)**	- -
	212426	AXLE 87, 16.5 X 7 SPG BRK - 25K **(REPLACED 158538, 172098 AFTER 06/16/2018)**	- -
1	K71-136-00	BRAKE SHOE H KIT 16.5X7 DXTR **(PER BRAKE) (INCLUDES ITEMS 2-9)**	2
2	014-065-00	ROLLER BRAKE SHOE(KNURLED)DXTR **(ITEM 1 INCLUDES 2 EACH)**	4
3	014-068-00	ANCHOR PIN-BRAKE SHOE DEXTERR **(ITEM 1 INCLUDES 2 EACH)**	4
4	046-096-00	SPRING BRAKE SHOE-ORANGE DEXTR **(ITEM 1 INCLUDES 1 EACH)**	2
5	046-097-00	SPRING-BRAKE SHOE KEEPER DEXTR **(ITEM 1 INCLUDES 2 EACH)**	4
6	056-017-00	ANCHOR PIN-BRAKE SHOE DEXTER **(ITEM 1 INCLUDES 2 EACH)**	4
7	056-018-00	RETAINER-RETRACTOR SPRING DXTR **(ITEM 1 INCLUDES 2 EACH)**	4
8	071-122-00	RETAINER BRAKE SHOE ROLLER **(ITEM 1 INCLUDES 2 EACH)**	4
9	-----	INSTRUCTIONS **(NOT SHOWN) (ITEM 1 INCLUDES 1 EACH)**	1
10	138090	BUSHING KIT **(PER BRAKE) (INCLUDES ITEMS 11-20)**	2
11	005-096-00	WASHER CAMSHAFT DEXTER **(ITEM 10 INCLUDES 1 EACH)**	2
12	005-097-00	WASHER CAM SHAFT DEXTER **(ITEM 10 INCLUDES 2 EACH)**	2
13	113819	CAMSHAFT WASHER 28 SPLINE **(ITEM 10 INCLUDES 1 EACH)**	2
14	408101-001	SPIDER SEAL **(ITEM 10 INCLUDES 2 EACH)**	4
15	405129	SPIDER BUSHING **(ITEM 10 INCLUDES 1 EACH)**	2
16	405999-001	BUSHING, CAMSHAFT SUPPORT **(ITEM 10 INCLUDES 1 EACH)**	2
17	061-003-00	GREASE FITTING-SPIDER DEXTER **(ITEM 10 INCLUDES 1 EACH)**	2
18	214104	CAM LOCK RING **(ITEM 10 INCLUDES 2 EACH)**	2
19	069-078-00	SNAP RING **(ITEM 10 INCLUDES 1 EACH)**	2
20	-----	INSTRUCTIONS **(NOT SHOWN) (ITEM 10 INCLUDES 1 EACH)**	1
21	034-192-05	CAMSHAFT, 22-5/8” LH **(FOR 212418)**	1
21	034-193-05	CAMSHAFT, 22-5/8” RH **(FOR 212418)**	1
21	137461	CAMSHAFT, 25” LH **(FOR 212421, 212426)**	1
21	137485	CAMSHAFT, 25” RH **(FOR 212421, 212426)**	1
22	040-180-00	BRAKE SHOE & LINING DEXTER	4
23	139383	SLACK ADJUSTER,STR AUTO 28SPL **(INCLUDES CLEVIS, PINS, GAGE, & INSTRUCTIONS)**	2
24	126292	CHAMBER 30-30 7.00 PUSHROD	4
25	103805	ABS SENSOR BLOCK	2
26	101849	ABS SENSOR SPRING CLIP	2
27	101847	ABS SENSOR CABLE-.4M (1FT) **(SENSOR & CABLE ASSEMBLY)**	2
28	034-048-00	BRACKET AIR CHAMBER MTG	2
29	1-512-010007-05	NUT, HEX 1/4-20 GR2 ZP	8
30	005-079-00	LOCK WASHER, DEXTER	8

Eastern Wheel Sales Inc

Axle 16.5 x 7 Drum Brakes, Dexter

ITEM	PART NUMBER	DESCRIPTION	QTY
31	034-032-00	RETAINING PLATE-CAMSHAFT DEXTR **(EACH HALF SOLD SEPERATELY)**	4
32	034-047-00	BRACKET-CAMSHAFT SUPTWELD ON **(2 PER AXLE)**	4
33	007-139-00	BOLT RET CAM BUSHING DEXTER	8
34	159001	BRAKE SHOE&HARDWARE KIT16.5X7 **(1 KIT PER AXLE) (INCLUDES 2 EACH OF ITEMS 1 & 22)**	1
35	110976	DRUM FOR 103781 **(NOT SHOWN) (SEE DRUM & HUB ASSEMBLY)**	1

Eastern Wrecker Sales Inc

Table provided for general use.

NOTES:

Eastern Wrecker Sales Inc

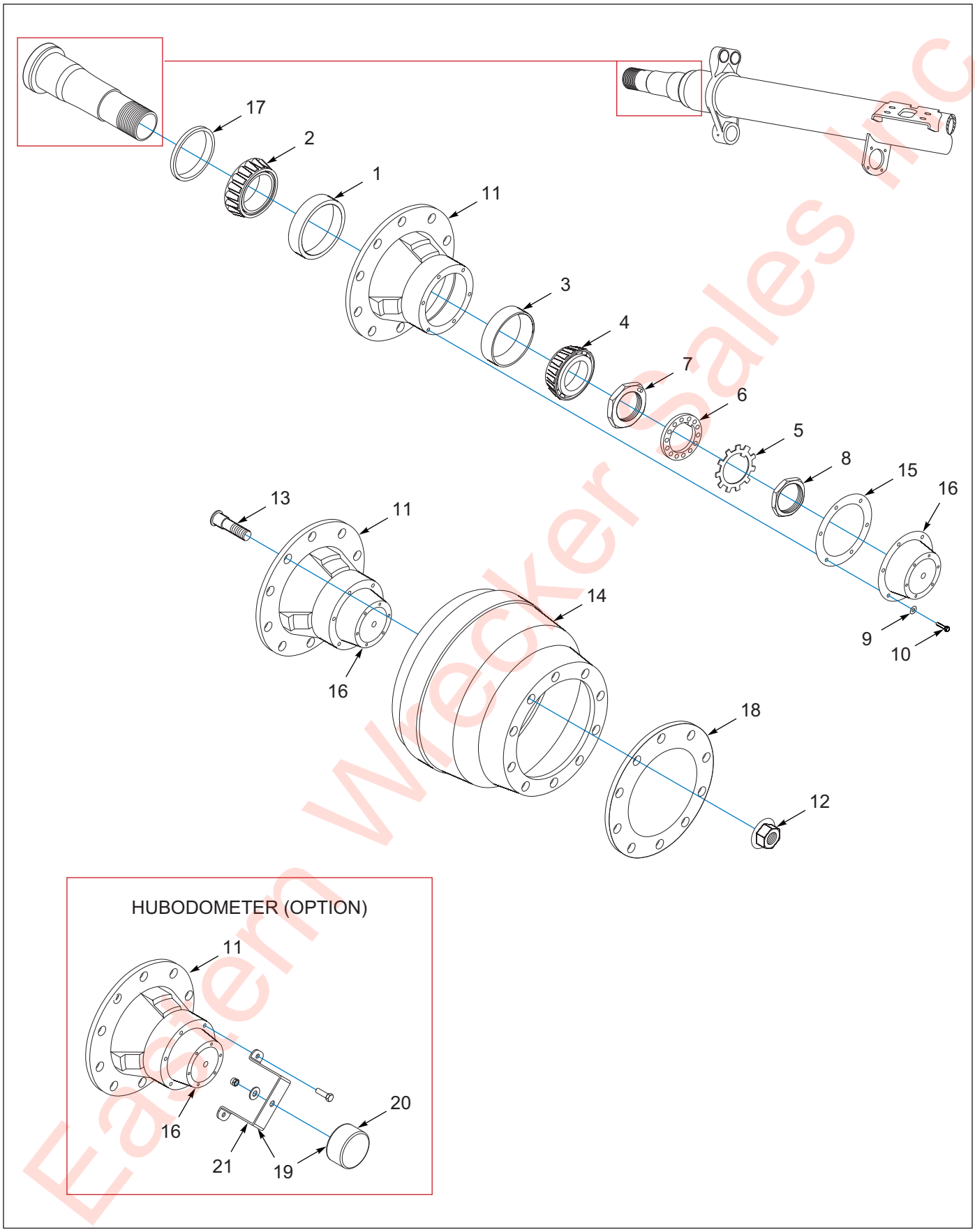

Figure 1-59: Axle 16.5 x 7 Drum and Hub Assembly, Dexter

Eastern Wrecker Sales Inc

Axle 16.5 x 7 Drum and Hub Assembly, Dexter

ITEM	PART NUMBER	DESCRIPTION	QTY
	212418	AXLE 69, 16.5 X 7 SPG BRK - 25K **(REPLACED 115713, 138203 AFTER 06/16/2018)**	- -
	212421	AXLE 75, 16.5 X 7 SPG BRK - 25K **(REPLACED 115715, 138955 AFTER 06/16/2018)**	- -
	212426	AXLE 87, 16.5 X 7 SPG BRK - 25K **(REPLACED 158538, 172098 AFTER 06/16/2018)**	- -
1	HM218210	BEARING CUP,INNER-DEXTERD225K **(PART OF ITEM 11 INCLUDES 1 EACH)**	2
2	HM218248	INNER BEARING	2
3	HM212011	OUTER CUP **(PART OF ITEM 11 INCLUDES 1 EACH)**	2
4	HM212049	OUTER BRG A19S	2
5	105106	STAR L/W **(005-098-00)**	2
6	105107	LOCK WASHER **(005-099-00)**	2
7	103103-002	NUT INNER SPINDLE DEXTER **(006-114-00)**	2
8	006-115-00	NUT OUTER, SPINDLE, DEXTER **(103102-001)**	2
9	1-861-010034-10	WASHER,LKG 5/16	12
10	1-654-010049-03	SCREW HX CP 5/16-18UNCX3/4GR5	12
11	110975	HUB FOR 103781 **(100 TOOTH TONE RING) (INCLUDES ITEMS 1, 3)**	2
12	179955	NUT,FLANGE MM22X1.5 (1.50HEX) **(179933, 153408)**	20
13	113536	STUD RH 22MM 3.5 STANDOUT **(131069)**	20
14	110976	DRUM FOR 103781	2
15	3067	GASKET HUB **(153402)**	2
16	4009	BOLT ON HUB CAP W/PLUG **(OIL CAP INCLUDES VENT PLUG AND ITEM 15)**	2
17	3-659-010012	SEAL, AXLE	2
18	3-870-010107	WHEEL-GUARD,10STD 285.75MM BC **(NYLON SPACER USED TO SEPARATE STEEL RIM OR DRUM FROM ALUMINUM RIM)**	2
19	137108	HUBODOMETER INSTL 255TIRE **(572RPM) (OPTION INCLUDES ITEMS 21, 22)**	1
20	113109	HUBODOMETER 572 RPM	1
21	197606	BRACKET HUBODOMETER 4"H TIS	1

Eastern Wecker Sales Inc

Air Brake System

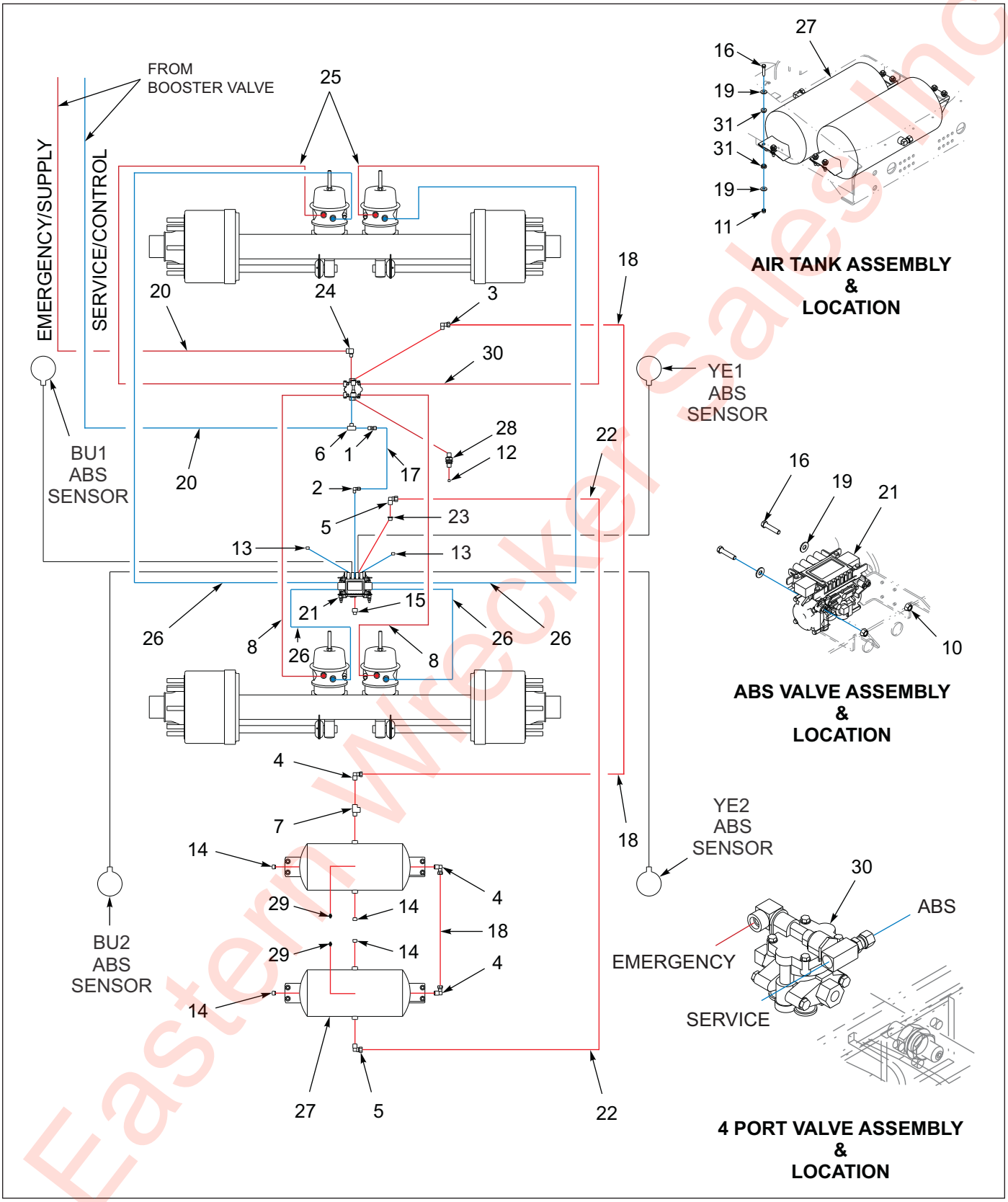

Figure 1-60: Air Brake System, 440B

Eastern Wrecker Sales Inc

Air Brake System, 440B

ITEM	PART NO.	DESCRIPTION	QTY.
	189600	SUSPENSION, 440A 102 SB LED **(REF. ONLY)**	- -
	189637	SUSPENSION, 440A 102 SB 62K D/L **(REF. ONLY)**	- -
	189602	SUSPENSION, 440A-CA 102 SB LED **(REF. ONLY)**	- -
	189639	SUSPENSION, 440A-CA 102 SB 62K D/L **(REF. ONLY)**	- -
1	1-297-010007-12	FITTING AIR 3/8 TUBE TO 3/8 NPT	1
2	1-297-010008-18	FITTING, AIR 90, 3/8 TUBE X 1/4 NPT	1
3	1-297-010008-23	FITTING, AIR 90, 1/2 TUBE TO 3/8 NPT	1
4	1-297-010008-24	FITTING, AIR 90, 1/2 TUBE TO 1/2 NPT	3
5	1-297-010008-26	FITTING, AIR 90, 5/8 TUBE TO 1/2 NPT	2
6	1-297-010017-03	FITTING, AIR PIPE, M/BR TEE 3/8	1
7	1-297-010018-04	FITTING, 1/2 BRASS PIPE ST TEE	1
8	1-384-010038056	HOSE, AIR 56” 3/8 WITH 3/8 ENDS	2
9	1-394-010001	HOSE, ABRASION SLEEVE X 2 **(NOT SHOWN)**	2
10	1-510-010001	NUT, FLANGE LOCK 3/8-16	3
11	1-512-010005-05	NUT, HEX SLFLKG, 3/8-16 UNC, GRB	8
12	1-560-010002-02	PLUG, PIPE 1/4 NPT	1
13	1-560-010002-03	PLUG, PIPE 3/8 NPTF	2
14	1-560-010002-04	PLUG, PIPE 1/2 NPT	4
15	1-560-010002-05	PLUG, PIPE 3/4-14 NPTF	1
16	1-654-010051-08	SCREW, HEX 3/8-16 UNC X 1-3/4 GR5	10
17	1-833-010002	TUBING, NYLON 3/8 OD	7
18	1-833-010003	TUBING, NYLON 1/2 OD	15
19	1-861-010032-11	WASHER, FLAT Z/P/CD, 3/8W	18
20	100949	HOSE, AIR 3/8 X 222 WITH 3/8 ENDS	2
21	114584	ABS KIT WABCO, 4S/2M **(SEE PAGE 1-116)**	1
22	117304	TUBING, NYLON 5/8 OD	7
23	118-2659-9	BUSHING, 1/2NPT X 3/4NPT STL	1
24	2089-6-6S	ADAPTER, 903/8MPT X 3/8FPT	1
25	3-384-010020	HOSE, AIR 3/8 X 32, .38 NPT ENDS	2
26	3-384-010031	HOSE, AIR 3/8 X 42, .38 NPT ENDS	4
27	3-780-010002	TANK, AIR 9.5 X 55.2, .5NPT PORTS	2
28	55B61	FRAME UNION	1
29	56D4	COCK, DRAIN AIR TANK VEL036019	2
30	758-181	VALVE TASK, 4 PORT	1
31	805-2	BUSHING, STEP	16

Eastern Wrecker Sales Inc

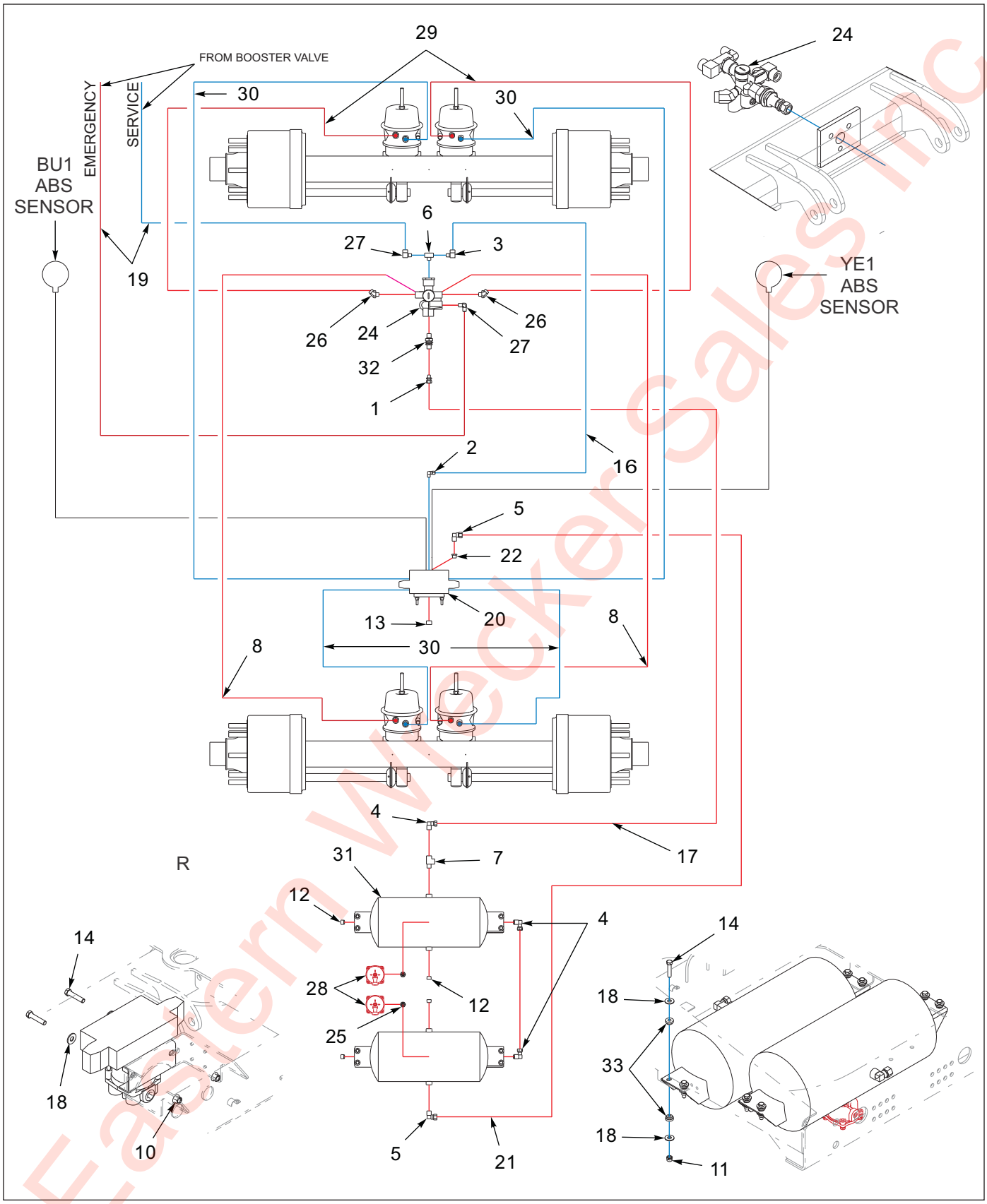

Figure 1-61: Air Brake System, 440B Aqua Package

Eastern Wrecker Sales Inc

Air Brake System, 440B Aqua Package

ITEM	PART NO.	DESCRIPTION	QTY.
	215486	SUSP 440B GRT AQUA PKG **(REF. ONLY)**	- -
1	1-297-010007-14	FITTING, AIR, 1/2 TUBE X 1/4 NPT	1
2	1-297-010008-18	FITTING, AIR 90 3/8TUBEX1/4NPT	1
3	1-297-010008-20	FITTING, AIR, 90 3/8 TUBE X 3/8 NPT	1
4	1-297-010008-24	FITTING, AIR 90 1/2 TUBE TO 1/2 NPT	3
5	1-297-010008-26	FITTING, AIR 90 5/8 TUBE TO 1/2 NPT	2
6	1-297-010017-03	FITTING, AIR, PIPE M/BR TEE 3/8	1
7	1-297-010018-04	FITTING 1/2, BRASS PIPE, ST TEE	1
8	1-384-010038056	HOSE, AIR 56 IN. 3/8 W 3/8 ENDS	2
9	1-394-010001	HOSE ABRASION SLEEVE X 2 **(NOT SHOWN)**	2
10	1-510-010001	NUT, 3/8-16 UNC FLANGE LOCK	2
11	1-512-010005-05	NUT, HEX, SLFLKG, 3/8-16 UNC, GRB	8
12	1-560-010002-04	PLUG, PIPE, 1/2NPT	4
13	1-560-010002-05	PLUG, PIPE, 3/4-14 NPTF	1
14	1-654-010051-08	SCREW, HEX, 3/8-16UNCX1-3/4 GR5	10
15	1-796-010003-02	TIE, STRAP, PLASTIC, .18X40 IN. **(NOT SHOWN)**	10
16	1-833-010002	TUBING, NYLON 3/8 OD	7
17	1-833-010003	TUBING, NYLON 1/2 OD	15
18	1-861-010032-11	WASHER, FLAT, ZP/CD, 3/8W	18
19	100949	HOSE, AIR 3/8X222, W/3/8 ENDS	2
20	114585	BRAKE KIT, ROCKWELL ABS, 2S/1M **(SEE PAGE 1-116)**	1
21	117304	TUBING, NYLON 5/8 OD	7
22	118-2659-9	BUSHING, 1/2NPT X 3/4NPT STL	1
23	174143	KIT SNORKEL 2S/1M ABS VALVE	1
24	174241	VALVE, 4-PORT	1
25	2040-4-6S	REDUCER, 1/4-18 TO 3/8-18 **(ATTACHES TO BASE OF 215498)**	2
26	2088-6-6S	ADAPTER, 45, 3/8MPT X 3/8 FPT	2
27	2089-6-6S	ADAPTER, 90, 3/8MPT X 3/8 FPT	2
28	215498	AUTO RESERVOIR DRAIN VALVE	2
29	3-384-010020	HOSE, AIR 3/8X32, .38 NPT ENDS	2
30	3-384-010031	HOSE, AIR 3/8X42, .38 NPT ENDS	4
31	3-780-010002	TANK, AIR 9.5X22.5, .5 NPT PORTS	2
32	55B61	FRAME UNION	1
33	805-2	BUSHING, STEP	16

Eastern Wrecker Sales Inc

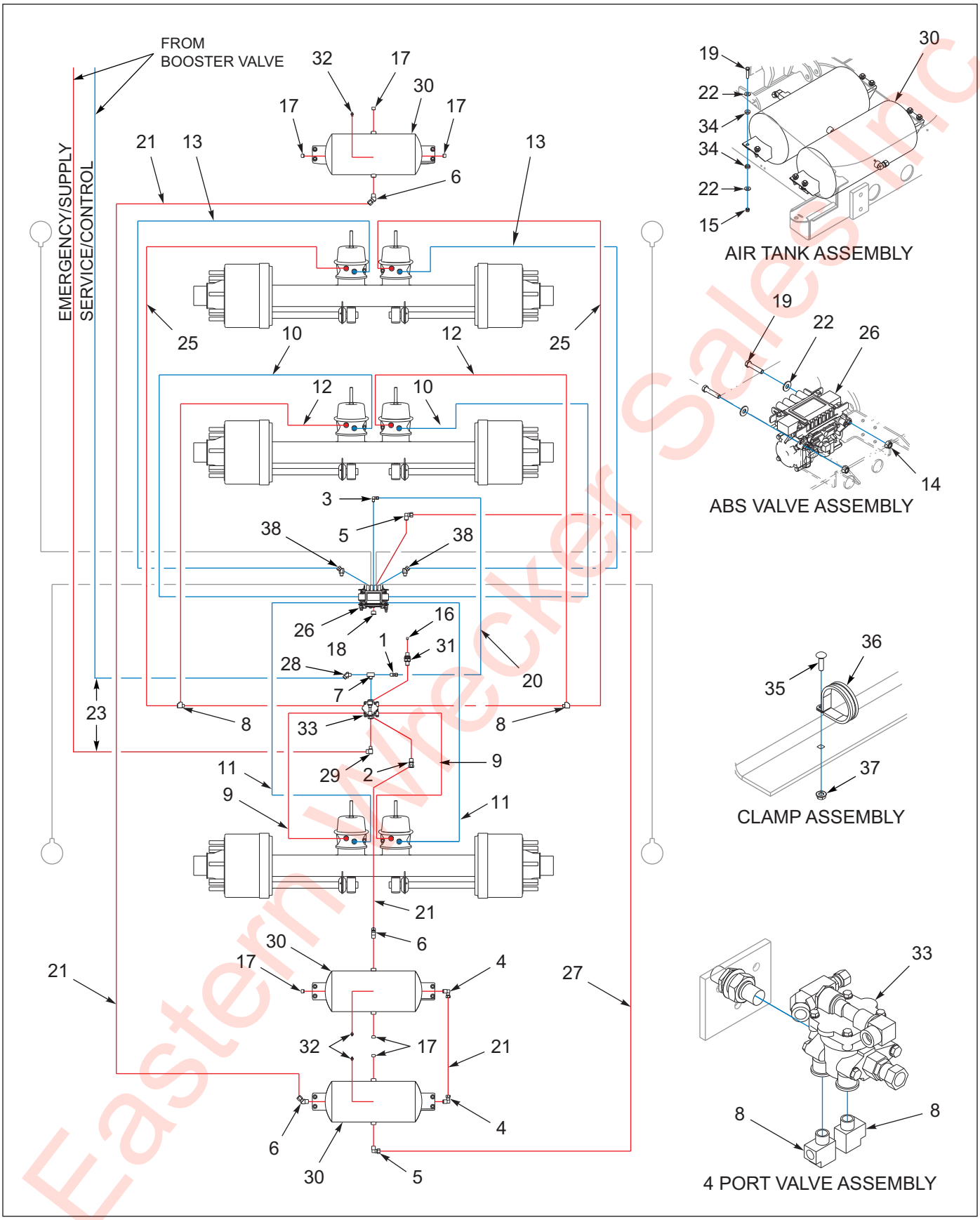

Figure 1-62: Air Brake System, 455B

Eastern Wrecker Sales Inc

Air Brake System, 455B

ITEM	PART NO.	DESCRIPTION	QTY.
	214468	SUSP 455B-102 SB	- -
	214471	SUSP 455B-108 BB	- -
	215213	SUSP ASSY 455B-120BB 87 TRK	- -
1	1-297-010007-12	FITTING AIR 3/8 TUBE TO 3/8 NPT	1
2	1-297-010007-15	FITTING, AIR 1/2 TUBE TO 3/8 NPT	1
3	1-297-010008-18	FITTING, AIR 90, 3/8 TUBE X 1/4 NPT	1
4	1-297-010008-24	FITTING, AIR 90, 1/2 TUBE TO 1/2 NPT	2
5	1-297-010008-26	FITTING, AIR 90, 5/8 TUBE TO 1/2 NPT	2
6	1-297-010013-16	FITTING, AIR 45	3
7	1-297-010017-03	FITTING, AIR PIPE, M/BR TEE 3/8	1
8	1-297-010018-03	FITTING, BRS PIPE ST TEE 3/8	2
9	1-384-010038024	HOSE, AIR 3/8 X 24	2
10	1-384-010038038	HOSE, AIR 3/8 X 38	2
11	1-384-010038060	HOSE, AIR 3/8 X 60	2
12	1-384-010038076	HOSE, AIR 3/8 X 76	2
13	1-384-010038084	HOSE, AIR 3/8 X 84” **(BEFORE 08/31/2020)**	2
13	112819	HOSE ASM AIR 3/8X156,W/3/8 END **(AFTER 08/31/2020)**	2
14	1-510-010001	NUT, FLANGE LOCK 3/8-16	3
15	1-512-010005-05	NUT, HEX SLFLKG, 3/8-16 UNC, GRB	12
16	1-560-010002-02	PLUG, PIPE 1/4 NPT	1
17	1-560-010002-04	PLUG, PIPE 1/2 NPT	6
18	1-560-010002-05	PLUG, PIPE 3/4-14 NPTF	1
19	1-654-010051-08	SCREW, HEX 3/8-16 UNC X 1-3/4 GR5	14
20	1-833-010002	TUBING, NYLON 3/8 **(BY THE FOOT)**	10
21	1-833-010003	TUBING, NYLON 1/2 **(BY THE FOOT)**	21
22	1-861-010032-11	WASHER, FLAT 3/8W	26
23	100949	HOSE, AIR 3/8 X 222 W/ 3/8 ENDS	2
24	103817	CLAMP,HOSE 660 U/C **(NOT SHOWN)**	1
25	107956	HOSE, AIR 3/8 X 136 W/3/8 ENDS **(BEFORE 08/31/2020)**	2
25	1-384-010038204	HOSE ASM AIR 3/8X204,W/3/8 END **(AFTER 08/31/2020)**	2
26	114586	BRAKE KIT, ABS 4S/2M **(SEE PAGE 1-116)**	1
27	117304	TUBING, NYLON 5/8 OD	7
28	2088-6-6S	ADAPTER, 45	1
29	2089-6-6S	ADAPTER, 903/8MPT X 3/8FPT	1
30	3-780-010002	TANK, AIR 9.5 X 55.2, .5NPT PORTS	3
31	55B61	FRAME UNION	1
32	56D4	COCK, DRAIN AIR TANK VEL036019	3
33	758-181	VALVE TASK, 4 PORT	1
34	805-2	BUSHING, STEP	24
35	1-654-010158-02	SCREW,RHD,SQ NCK 1/4-20UNCX1	2
36	108417	NUT SPIRAL 1/4-20HX FG	2
37	202930	CLAMP,PART CUSH ALUM,2	2
38	2049-6-6S	45 SWIVEL 3/8 MALE 3/8 FEMALE **(BEFORE 08/31/2020 HOSES STRAIGHT TO ABS VALVE, AFTER 08/31/2020 HOSES TO 45* FITTING)**	2

Eastern Wrecker Sales Inc

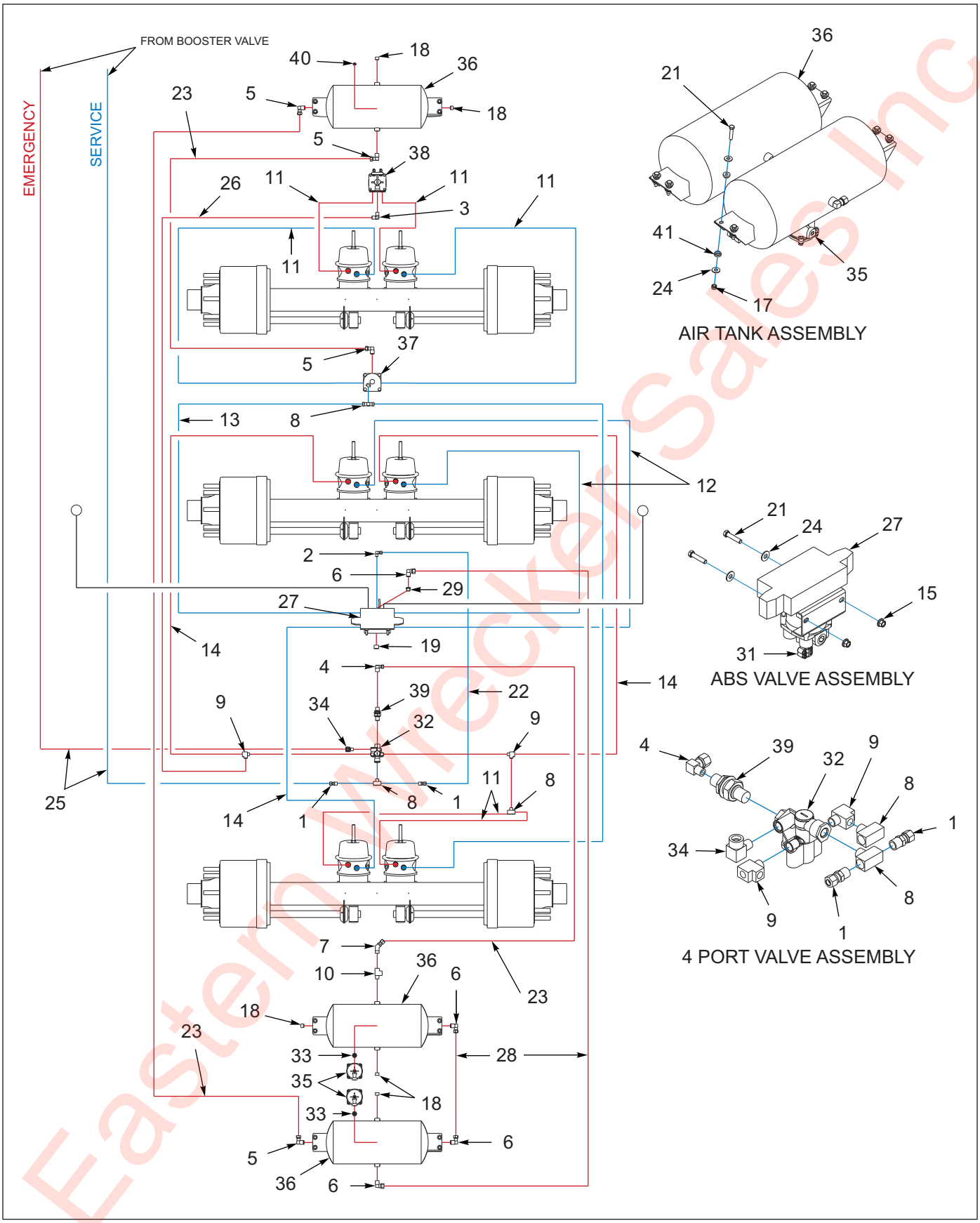

Figure 1-63: 455B Air Brakes - Aqua Package

Eastern Wrecker Sales Inc

Air Brake System, 455B Aqua Package

ITEM	PART NO.	DESCRIPTION	QTY.
	216223	SUSP 455B-CA-102 SB AQUA	- -
1	1-297-010007-12	FITTING AIR 3/8TUBE X 3/8NPT	2
2	1-297-010008-18	FITTING,AIR 90 3/8TUBEX1/4NPT	1
3	1-297-010008-20	FITTING,AIR 90 3/8TUBEX3/8NPT	1
4	1-297-010008-22	FITTING,1/2T-1/4P,AIR 90	1
5	1-297-010008-24	FITTING,AIR 90 1/2TUBEX1/2NPT	4
6	1-297-010008-26	FITTING AIR 5/8TUBE X1/2NPT90	4
7	1-297-010013-16	FITTING,AIR 1/2X1/2 45 M/ELB	1
8	1-297-010017-03	FITTING,BRS PIPE M/BR TEE 3/8	3
9	1-297-010018-03	FITTING,3/8 BRASS PIPE,ST TEE	2
10	1-297-010018-04	FITTING 1/2 BRASS PIPE ST TEE	1
11	1-384-010038024	HOSE ASM AIR 3/8X24,W/3/8 END	6
12	1-384-010038038	HOSE ASM AIR 3/8X38,W/3/8 END	2
13	1-384-010038060	HOSE ASM AIR 3/8X60,W/3/8 END	1
14	1-384-010038076	HOSE ASM AIR 3/8X76,W/3/8 END	3
15	1-510-010001	NUT, 3/8-16 UNC FLG LOCK GR G	2
16	1-512-010003-14	NUT 3/8-16UNC ESNA	2
17	1-512-010005-05	NUT, HEX, SLFLKG GRB 3/8-16	12
18	1-560-010002-04	PLUG, PIPE, 1/2NPT	5
19	1-560-010002-05	PLUG,PIPE, 3/4-14NPTF	1
20	1-654-010051-06	SCREW,HEX CAP 3/8-16UNCX1-1/4	2
21	1-654-010051-08	SCREW,HEX CAP,3/8-16X1-3/4 G5	14
22	1-833-010002	TUBING NYLON 3/8 OD	10
23	1-833-010003	TUBING NYLON 1/2 OD	21
24	1-861-010032-11	WASHER, FLAT 3/8 W ZP/CD	26
25	100949	HOSE ASM AIR 3/8X222 W/3/8 END	2
26	107956	HOSE ASM AIR 3/8X136,W/3/8 END	1
27	114585	ABS KIT WABCO 2S/1M SGL **(SEE PAGE 1-116)**	1
28	117304	TUBING NYLON 5/8	7
29	118-2659-9	BUSHING 1/2NPTX3/4NPT STL	1
31	174143	KIT,SNORKEL 2S/1M ABS VALVE	1
32	174241	VALVE, 4 PORT, ABS	1
33	1/2X3/8BUSH	BUSHING 1/2X3/8 BLACK IRON	2
34	2089-6-6S	ADAPTER 90 3/8MPTX3/8FPT	1
35	215498	AUTO RESERVOIR DRAIN VALVE	2
36	3-780-010002	TANK AIR 9.5X22.5 .5NPT PORTS	3
37	3-843-010005	VALVE,RELAY 2PORT THIRD AXLE	1
38	3-843-010038	VALVE,AIR RELAY FAST AIR BAL	1
39	55B61	FRAME UNION	1
40	56D4	COCK,DRAIN AIR TANK VEL036019	1
41	805-2	BUSHINGS, STEP	24

Eastern Wrecker Sales Inc

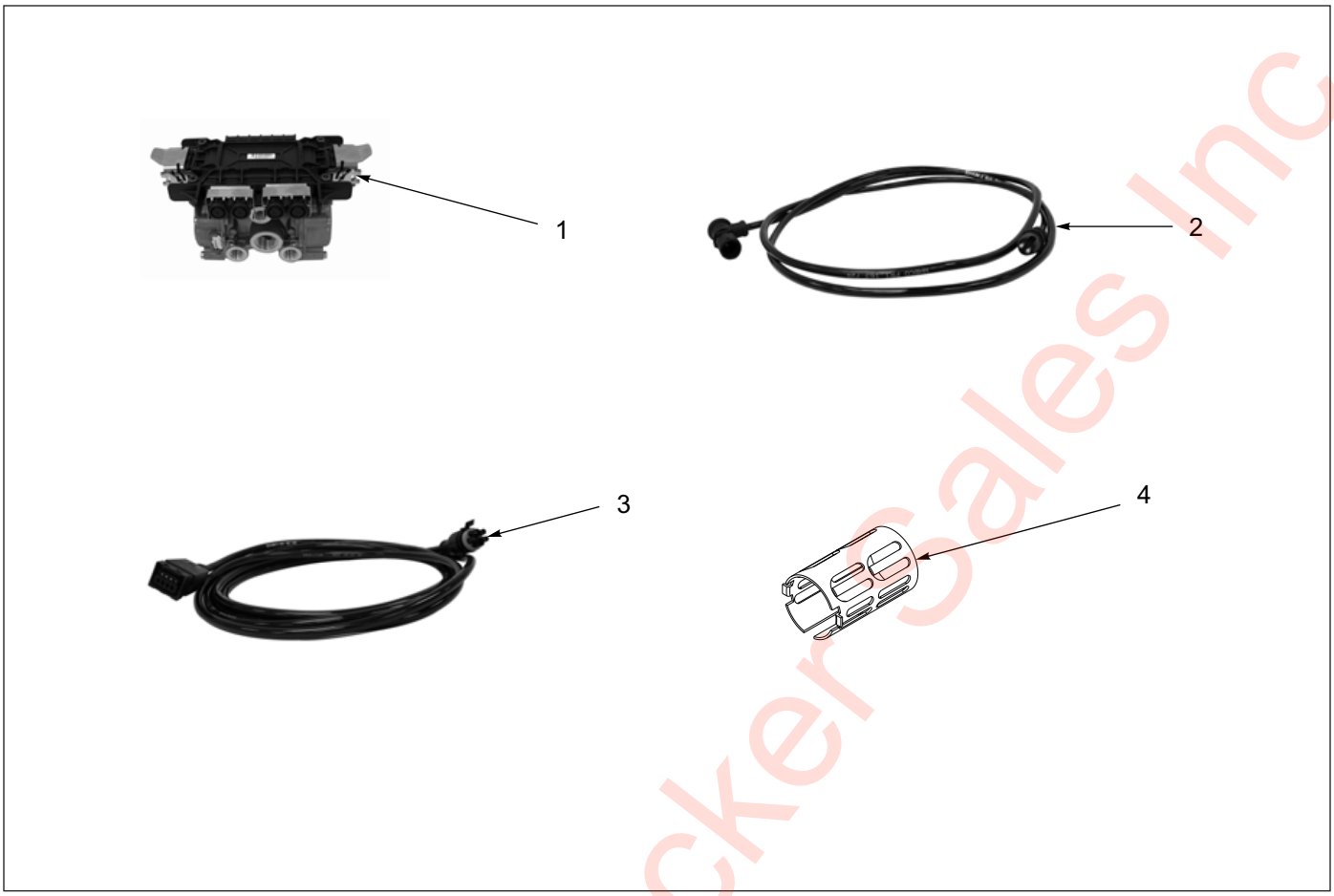

Figure 1-64: ABS Brake Kit - Rockwell

ABS Brake Kit - Rockwell

ITEM	PART NO.	DESCRIPTION	QTY.
	114584	ABS BRAKE KIT 4S/2M	- -
	114586	ABS BRAKE KIT 4S/2M-TRI/SPRD	- -
1	114588	ECU/VALVE ASSEMBLY	1
2	101848	SENSOR EXTENSION CABLE - 6 FT **(USED W/ 114584)**	4
2	103861	SENSOR EXTENSION CABLE - 10 FT **(USED W/ 114586)**	4
3	147464	POWER/DIAGNOSTIC CABLE 4.0M/3.0M	1
4	101849	SPRING CLIP, ABS SENSOR	2
-----	101847	ABS SENSOR CABLE-4M 90°, 1 FT. **(NOT SHOWN)**	2

Eastern Wrecker Sales Inc

Table provided for general use.

NOTES:

Eastern Wrecker Sales Inc

Tire Inflation System

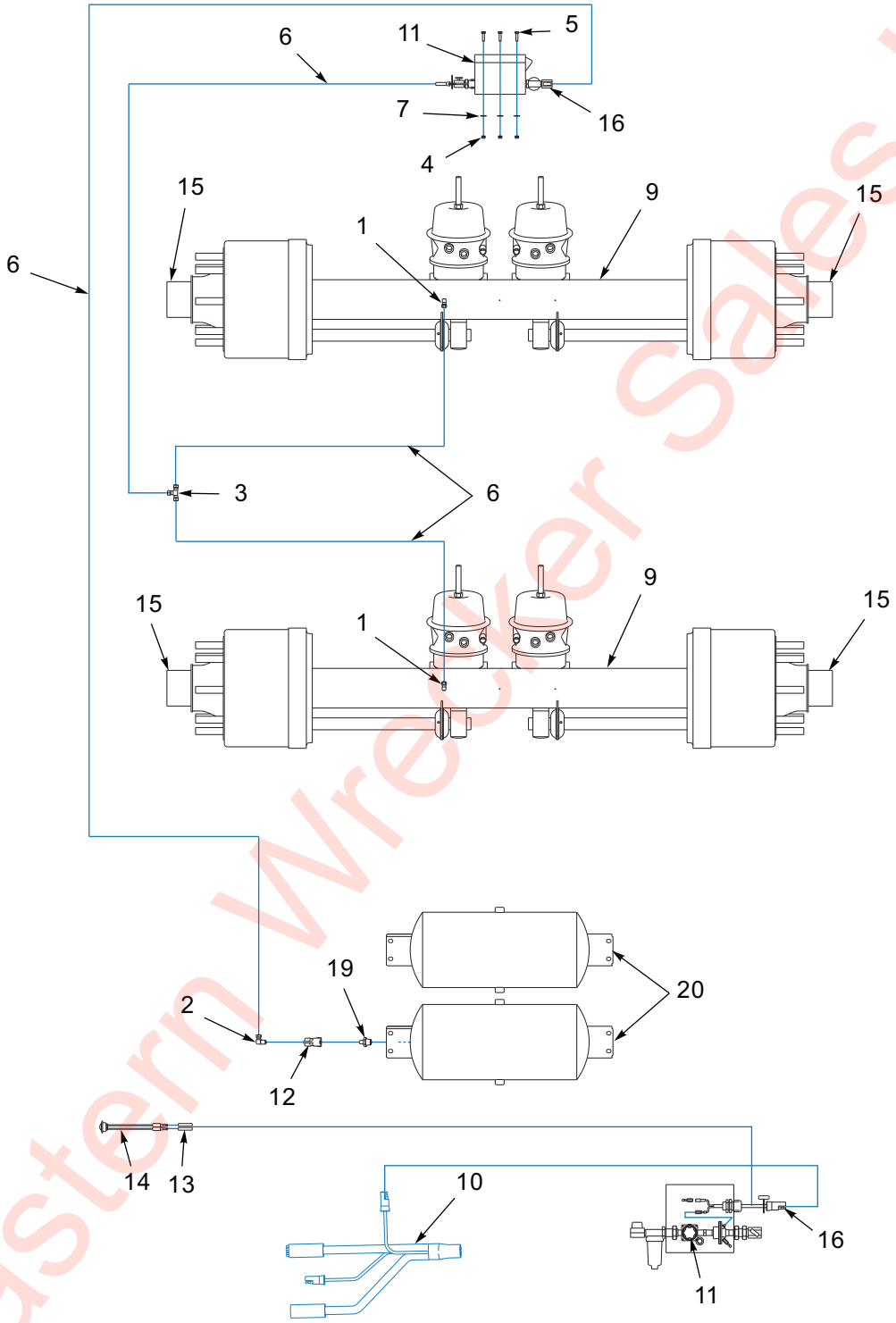

Landoll P/N: 228069 Replacement Thermalert Thermal Plug Kit

Figure 1-65: Thermalert, 2 Axle Air System (OPTION)

Eastern Wrecker Sales Inc

Thermalert, 2 Axle Air System (OPTION)

ITEM	PART NO.	DESCRIPTION	QTY.
	212400	SUSP 440B 2512-70.5 THERM TIS **(REF. ONLY)**	- -
1	1-297-010008-05	FITTING, AIR, 90, 1/4TUBEX1/8NPT	- -
2	1-297-010008-07	FITTING, AIR, 90, 1/4 TUBEX1/4NPT	- -
3	1-297-010010-01	FITTING, AIR, UNION, TEE 1/4	- -
4	1-512-010005-01	NUT, HEX, SLFLKG, 1/4-20 UNC	3
5	1-654-010047-06	SCREW, HEX, 1/4-20UNCX1 GR5	3
6	1-833-010001	TUBING, NYLON 1/4 OD	- -
7	1-861-010032-07	WASHER, FLAT, ZP/CD 1/4W	3
8	115629	LOCKTITE 593 **(NOT SHOWN)**	- -
9	121077	AXLE WDLMT 2512 SPG 70.5X36	- -
10	143103	HARNESS E-CHAIN GROTE	- -
11	168593	THERMALERT TIS 2 AXLE **(COMPONENTS) (SEE PAGE 1-123)**	1
12	168610	THERMALERT PRESSURE PROTECTION VALVE	- -
13	168613	THERMALERT WIRING HARNESS	1
14	183413	LIGHT WHT LED .75 CL/MK GROTE	1
15	197613	HUB CAP TIS OIL AXLE	4
16	202207	HARNESS, MOD TIS POWER HARNESS	1
17	205836	ORANGE WARNING DECAL TIS **(NOT SHOWN)**	1
18	205837	YELLOW WARNING DECAL TIS **(NOT SHOWN)**	2
19	2083-8-4S	NIPPLE, 1/4NPT X 1/2NPT	1
20	3-780-010002	TANK, AIR, 9.5X22.5	2

Eastern Wrecker Sales Inc

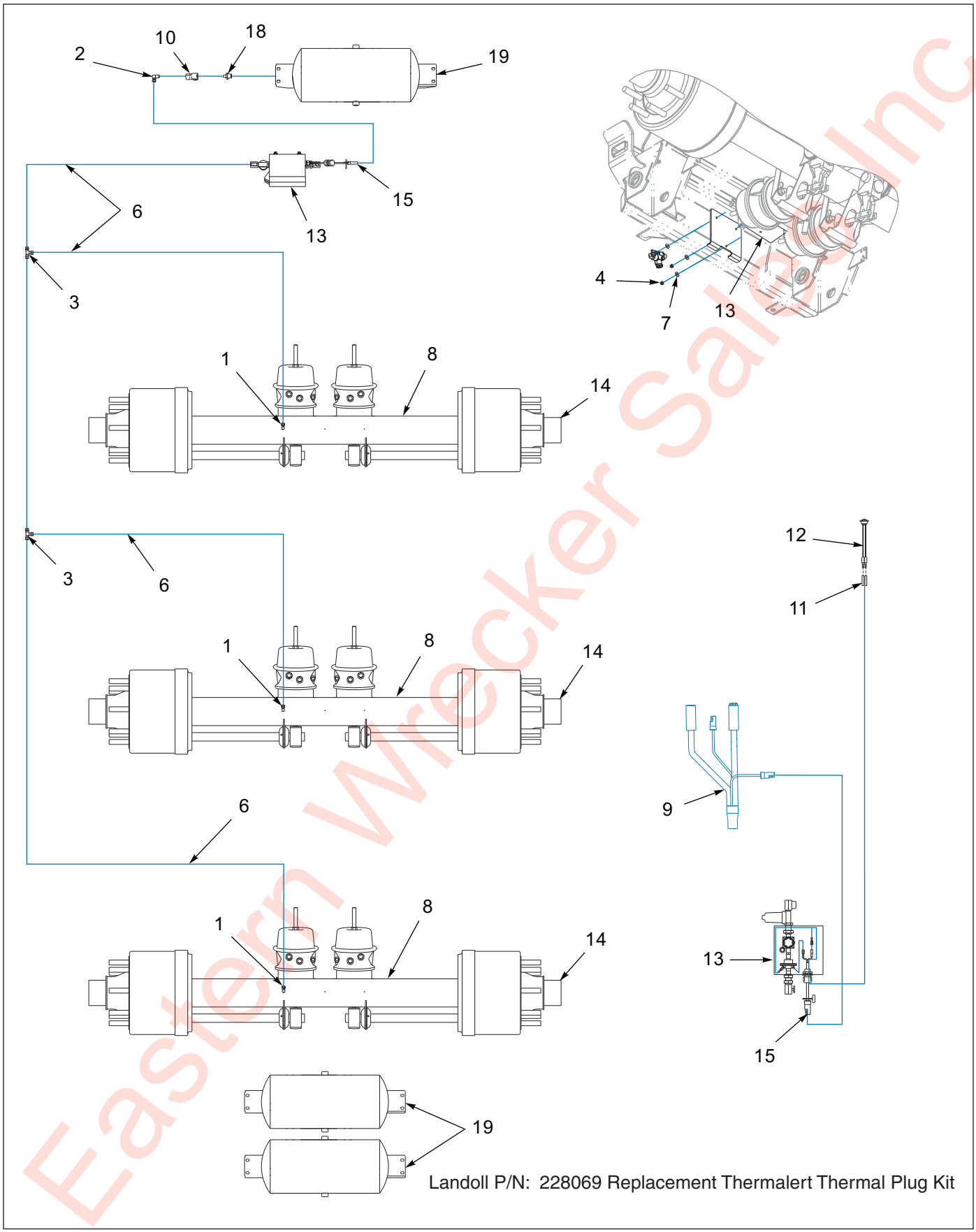

Eastern Wrecker Sales Inc

Figure 1-66: Thermalert, 3 Axle Air System (OPTION)

Thermalert, 3 Axle Air System (OPTION)

ITEM	PART NO.	DESCRIPTION	QTY.
	197322	SUSP 455B 2512-70.5 THERM TIS **(REF. ONLY)**	- -
1	1-297-010008-05	FITTING, AIR, 90, 1/4TUBEX1/8NPT	3
2	1-297-010008-07	FITTING, AIR, 90, 1/4 TUBEX1/4NPT	1
3	1-297-010010-01	FITTING, AIR, UNION, TEE 1/4	2
4	1-512-010005-01	NUT, HEX, SLFLKG, 1/4-20 UNC	3
5	1-654-010047-04	SCREW, HEX, 1/4-20UNCX1 GR5	3
6	1-833-010001	TUBING, NYLON 1/4 OD	- -
7	1-861-010032-07	WASHER, FLAT, ZP/CD 1/4W	3
8	121077	AXLE WLDMT 2512 SPG 70.5 X 36	3
9	143103	HARNESS E-CHAIN GROTE	1
10	168610	THERMALERT PRESSURE PROTECTION VALVE	1
11	168613	THERMALERT WIRING HARNESS	1
12	183413	LIGHT WHT LED .75 CL/MK GROTE	1
13	195395	THERMALERT TIS 3 AXLE **(COMPONENTS)(SEE PAGE 1-123)**	1
14	197613	HUB CAP TIS OIL AXLE	6
15	202207	HARNESS MOD, TIS POWER HARNESS	1
16	205836	ORANGE WARNING DECAL, TIS **(NOT SHOWN)**	1
17	205837	YELLOW WARNING DECAL, TIS **(NOT SHOWN)**	2
18	2083-8-4S	NIPPLE 1/4NPT X 1/2NPT	1
19	3-780-010002	TANK, AIR 9.5X22.5, .5NPT PORTS	3

Eastern Wrecker Sales Inc

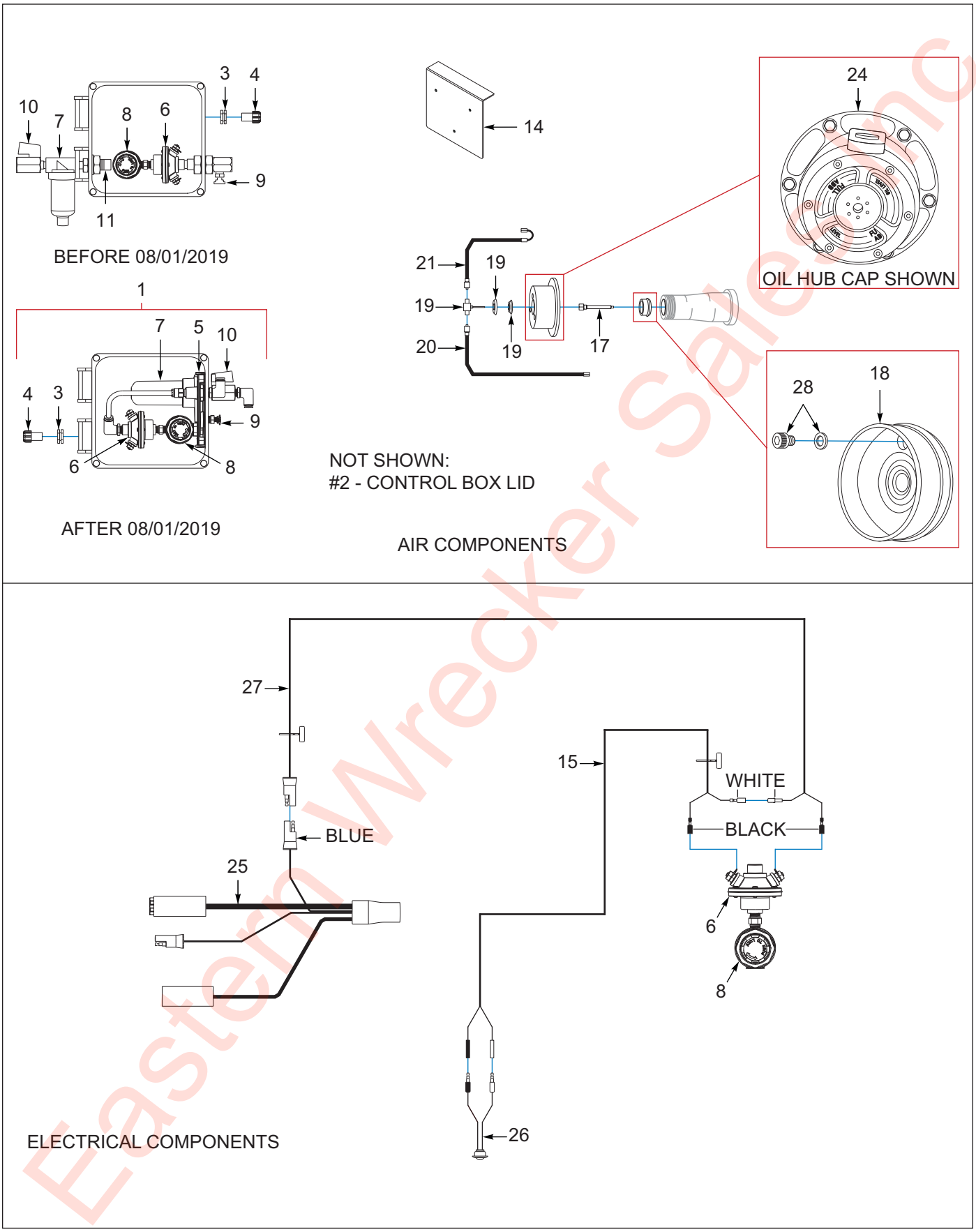

Figure 1-67: Thermalert Electrical System & Components (OPTION)

Eastern Wrecker Sales Inc

Thermalert Electrical System & Components (OPTION)

ITEM	PART NO.	DESCRIPTION	QTY.
	168593	THERMALERT TIS 2 AXLE **(INCLUDES ITEMS 1-23)**	- -
	195395	THERMALERT TIS 3 AXLE **(INCLUDES ITEMS 1-23)**	- -
1	168618	THERMALERT CONTROL BOX **(BEFORE 08/01/2019 INCLUDES ITEMS 2-4, 6-11) (AFTER 08/01/2019 INCLUDES ITEMS 2-10)**	1
2	216705	CONTROL BOX LID **(180226) (NOT SHOWN)**	1
3	106-0006	NUT 1/2 CONDUIT STL	1
4	20125	STRAIN RELIEF, 1/4TO3/8	1
5	230613	TIS MANIFOLD ASSY **(AFTER 08/01/2019) (INCLUDES ITEMS 7-8 PLUS GASKET, 4 SCREWS & 8" AIR LINE)**	1
6	180229	FLOW SENSE SWITCH **(216704)**	1
7	180228	SELF-DRAINING FILTER **(BEFORE 08/01/2019)**	1
7	-----	PARTICULATE FILTER ASSEMBLY **(AFTER 08/01/2019 PART IF ITEM 5)**	- -
8	180224	PRESSURE REGULATOR VALVE **(216708) (BEFORE 08/01/2019)**	1
8	-----	PRESSURE REGULATOR **(AFTER 08/01/2019 PART OF ITEM 5)**	- -
9	180225	PETCOCK **(216706)**	1
10	180223	SHUT-OFF VALVE **(216709)**	1
11	180227	BULKHEAD/CHECK VALVE **(BEFORE 08/01/2019 ONLY)**	1
12	1-833-010001	TUBING NYLON 1/4 OD **(NOT SHOWN - SEE PAGE 1-119 & 1-121)**	- -
13	168610	THERMALERT PRESS PROT VALVE **(NOT SHOWN - SEE PAGE 1-119 & 1-121)**	1
14	168611	THERMALERT CNTRL BOX BRKT	1
15	168613	THERMALERT WIRING HARNESS	1
16	168614	THERMALERT LIGHT BAG ASSY **(NOT SHOWN)**	1
17	168616	THERMALERT STAT & FILTER ASSY **(PER AXLE)**	2
18	168617	THERMALERT PRESS PLUG ASSY **(PER AXLE)**	2
19	178592	THRU TEE ASSEMBLY 4.25" **(INCLUDES SHIELD & VENT CAP) (PER AXLE)**	2
20	168612	TIS LONG HOSE **(180839) (17" LONG) (PER AXLE)**	2
21	180222	TIS SHORT HOSE **(180840) (13-1/2" LONG) (PER AXLE)**	2
22	205836	ORANGE WARNING DECAL TIS **(NOT SHOWN)**	1
23	205837	YELLOW WARNING DECAL TIS **(NOT SHOWN)**	2
24	197318	HUB CAP TIS GREASE AXLE **(OPTION) (PER AXLE)**	2
24	197613	HUB CAP TIS OIL AXLE **(STANDARD) (PER AXLE)**	2
25	143103	HARNESS ECHAIN GROTE	- -
26	183413	LIGHT,WHT LED .75 CL/MK GROTE	1
27	202207	HARNESS MOD, TIS POWER ASSY	1
28	228069	THERMALERT THERMAL PLUG KIT **(INCLUDES 1 PLUG AND 1 GASKET)**	1

Eastern Implement Sales Inc

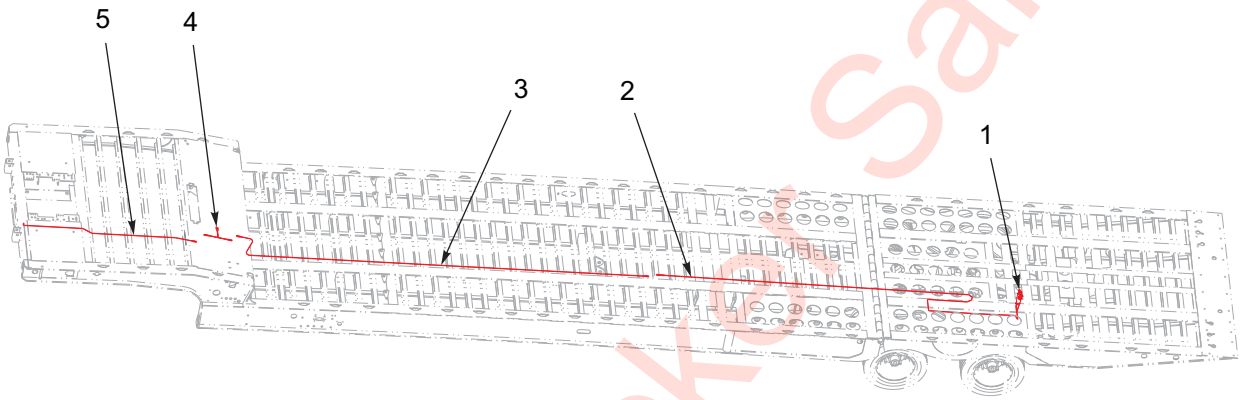

Figure 1-68: Tire Inflation System - Harness Kit (OPTION)

Tire Inflation System - Harness Kit (OPTION)

ITEM	PART NO.	DESCRIPTION	QTY.
	176473	HARNESS KIT TIRE INFL 400/900	- -
1	157703	TIRE INFLATION SYSTEM 3AX	- -
1	157702	TIRE INFLATION SYSTEM 2AX	- -
2	176476	HARNESS TIRE INFL LD25S	1
3	176477	HARNESS TIRE INFL LD30	1
4	176478	HARNESS TIRE INFL LDPWR	1
5	176479	HARNESS TIRE INFL LD15L	1

Eastern Wrecker Sales Inc

Table provided for general use.

NOTES:

Eastern Wrecker Sales Inc

Winches

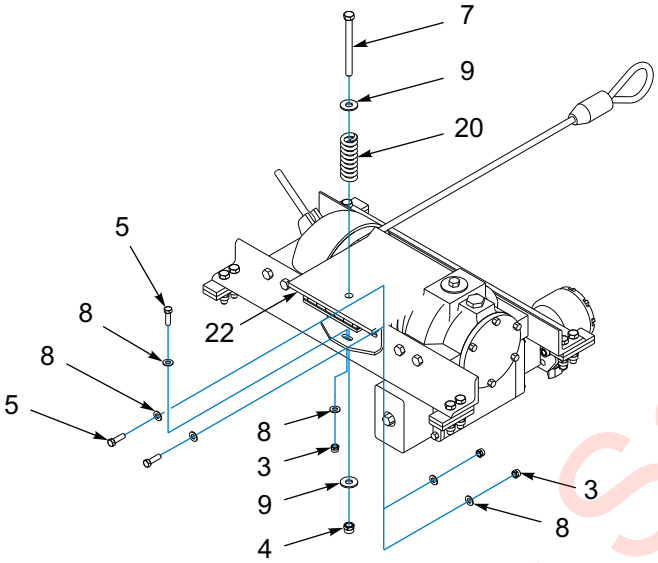

SPRING TENSIONER ASSEMBLY

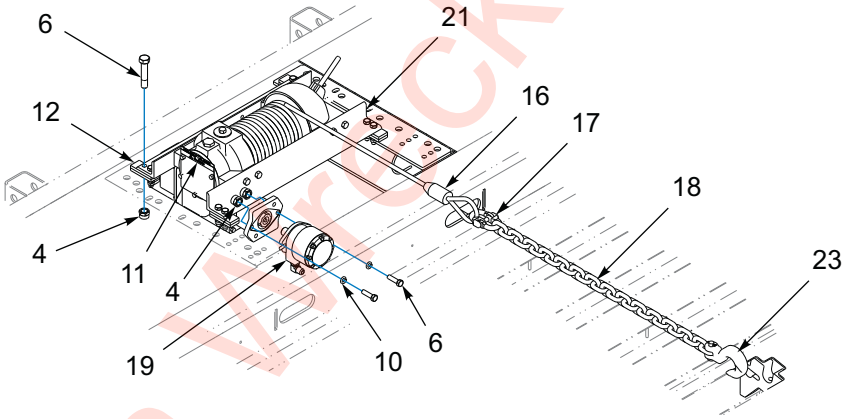

WINCH ASSEMBLY

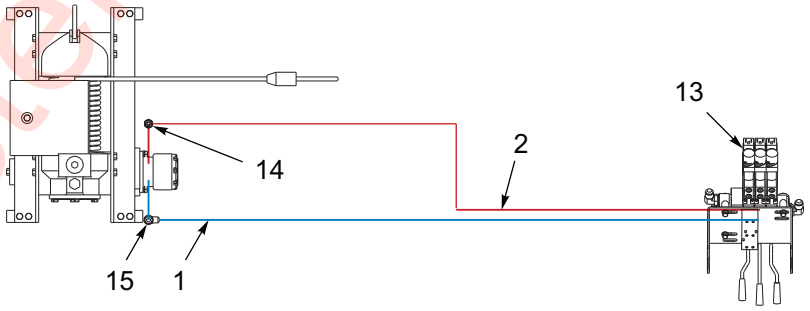

HYDRAULIC SYSTEM

Figure 1-69: Winch Installation - 12K Spring Tension (BRADEN)

Eastern Wrecker Sales Inc

Winch Installation - 12K Spring Tension (BRADEN)

ITEM	PART NO.	DESCRIPTION	QTY
	3-873-010144-01	WINCH, 12K SPRING TENSION	- -
1	1-397-010301170	HOSE ASSEMBLY 1/2 X 170	1
2	1-397-010302172	HOSE ASSEMBLY 1/2 X 172	1
3	1-512-010005-05	NUT, HEX LOCK 3/8-16	3
4	1-512-010005-09	NUT, HEX LOCK 1/2-13 GRB	11
5	1-654-010051-06	SCREW, HEX HEAD CAP 3/8-16 X 1-1/4 GR5	3
6	1-654-010055-04	SCREW, HEX, 1/2-13 UNC X 1-3/4 GR5	10
7	1-654-010055-16	SCREW, HEX HEAD CAP 1/2-13 X 5-1/2 GR5	1
8	1-861-010032-10	WASHER, FLAT 3/8N	6
9	1-861-010032-15	WASHER, FLAT, ZP/CD, 1/2W	2
10	1-861-010034-13	WASHER, SPLIT LOCK 1/2	2
11	100600	DECAL, WARNING, BRADEN WINCH	1
12	116378	SPACER, WINCH	8
13	148241	VALVE ASSEMBLY, 3-SPOOL 400 **(SEE PAGE 1-28)**	- -
14	202702-10-8S	ADAPTER, #10 O-RING - #8 TUBE	1
15	2062-10-8S	ADAPTER, 90, #10 O-RING - #8 TUBE	1
16	3-155-010017-4	CABLE ASSEMBLY, 1/2 X 85’ LENGTH	- -
17	3-174-010038	CHAIN LINK, CONNECTING, 1/2	1
18	3-174-010039036	CHAIN, 1/2 X 36” GRD7	1
19	3-481-010006	MOTOR HYD. - 12K **(SEE PAGE 1-145)**	1
20	3-720-010010	SPRING COMPRESSION	1
21	3-873-010122	WINCH ASSEMBLY, 12,000LB.	1
22	3-873-010124	WINCH TENSIONER, 20K BRADEN SPRING	1
23	7HCGHT500	HOOK, CLEVIS, GRAB 1/2	1

Eastern Wrecker Sales Inc

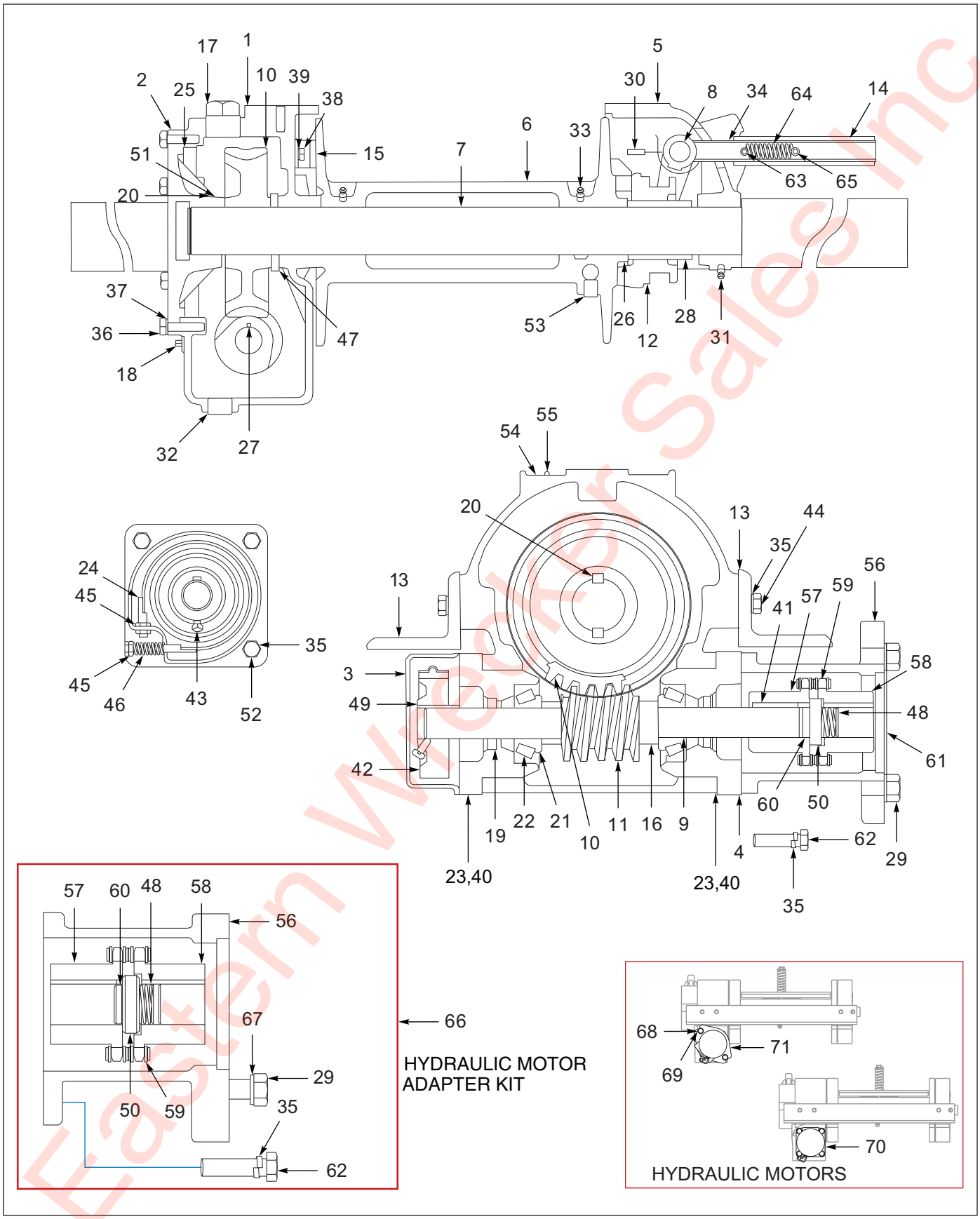

Figure 1-70: Winch Items - 12,000 Lb. (BRADEN)

Eastern Wrecker Sales Inc

Winch Items - 12,000 Lb. (BRADEN)

ITEM	PART NO.	DESCRIPTION	QTY.
	3-873-010122	WINCH, WORM GEAR 12,000 LB	- -
1	81006	HOUSING	1
1	18078	BUSHING-WORM HSNG ASSY12MBRAD	1
2	81009	LU2-144-0 WORM HOUSING COVER	1
2	11368	BUSHING 12K WORM WINCH HOUSING	1
3	18032	BEARING CONTAINER	1
4	23303	CONTAINER BEARING	2
5	81530	LEG ASSY	1
6	11128	CABLE DRUM	1
7	11129	CABLE DRUM SHAFT	1
8	11130	SHIFTER SHAFT BRADEN	1
9	23470	WORM SHAFT	1
10	11144	GEAR, WORM, LH **(BIG GEAR)**	1
11	11142	WORM **(LITTLE GEAR)**	1
12	18039	CLUTCH COLLAR	1
13	22752	ANGLE BASE ALU-2-146 12M BRAD	2
14	12817	SHIFTER HANDLE	1
15	81025	DRAG BRAKE LGU2-10F WINCH	1
16	11308	WORM SPACER	2
17	-----	PLUG PIPE **(22775)**	1
18	18009	PLUG	1
19	18026	SEAL	2
20	11117	KEY	2
21	18015	BEARING CONE BRADEN LGU2	2
22	18016	BEARING CUP BRADEN LGU2	2
23	18027	GASKET	3
24	21925	BRK BAND ASSY	1
25	11133	SEAL	3
26	18019	RING RETAINER	1
27	18030	KEY	1
28	18020	CLUTCH KEY	2
29	-----	CAPSCREW **(10009)**	2
30	11837	ROLL PIN	2
31	18047	GREASE FITTING	1
32	19045	DRAIN PLUG	1
33	-----	FITTING GREASE **(11799)**	2
34	13839	SHIFTER FORK	1
35	110450	LOCKWASHER #18003	16
36	-----	CAPSCREW **(11767)**	6
37	11011	WASHER LOCK	6
38	-----	CAPSCREW **(13005)**	2
39	-----	WASHER LOCK **(12780)**	2
40	18024	GASKET	3
41	18044	KEY	1
42	18028	BRAKE DRUM	1
43	12075	SET SCREW	1
44	-----	CAPSCREW **(21961)**	12
45	13468	NUT	4

Eastern Wrecker Sales Inc

Winch Items - 12,000 Lb. (BRADEN)

ITEM	PART NO.	DESCRIPTION	QTY.
46	18029	BRAKE BAND SPRING	1
47	11240	THRUST RING BRADEN LUU2	1
48	110452	SPRING #23353	1
49	10078	ROTOR KEY	1
50	23078	CONSTANT SPACER	1
51	13680	RING,THRUST	1
52	110453	CAPSCREW #22703	4
53	218058	SET SCREW 12K WINCH CABLE	1
54	-----	WARNING PLATE **(23310)**	1
55	-----	DRIVE SCREW **(11842)**	2
56	23079	MOTOR ADAPTER 12M WINCH	1
57	23081	COUPLER HALF WINCH	1
58	23083	COUPLING HALF MOTOR LGU2-10F	1
59	13424	CHAIN RLR	1
60	115851	SPACER #23085	1
61	-----	SHIPPING COVER **(21959)**	1
62	110449	CAPSCREW #22704	4
63	13028	ROLL PIN	1
64	18002	SPRING	1
65	18056	ROLLPIN	1
66	61333	HYD. MOTOR ADAPTER KIT, 12,000# WINCH **(INCLUDES ITEMS 48, 50, 56-60)**	1
67	216581	LOCKWASHER **(11026)**	4
68	1-654-010055-04	SCREW,HEX CAP,1/2-13UNCX1-3/4 **(4 EACH FOR 3-873-010126-1) (2 EACH FOR 3-873-010126-2)**	- -
69	1-861-010034-13	WASHER, LKG HLCL SPR, 1/2 **(4 EACH FOR 3-873-010126-1) (2 EACH FOR 3-873-010126-2)**	- -
70	104-1003	WINCH MOTOR **(CHAR-LYNN)**	1
71	3-481-010006	MOTOR,HYD 7.1 CU IN/REV,SAE A **(PARKER)**	1

Eastern Wrecker Sales Inc

Table provided for general use.

NOTES:

Eastern Wrecker Sales Inc

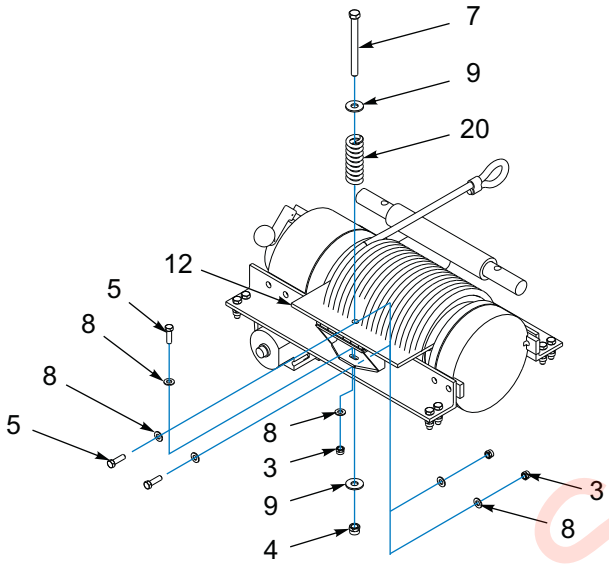

SPRING TENSIONER ASSEMBLY

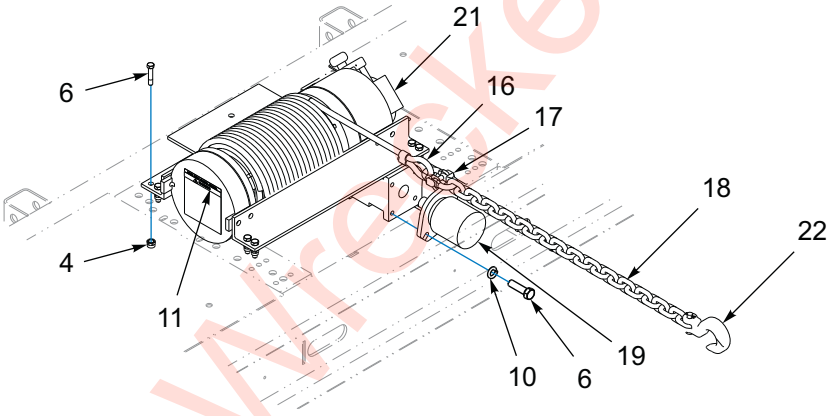

WINCH ASSEMBLY

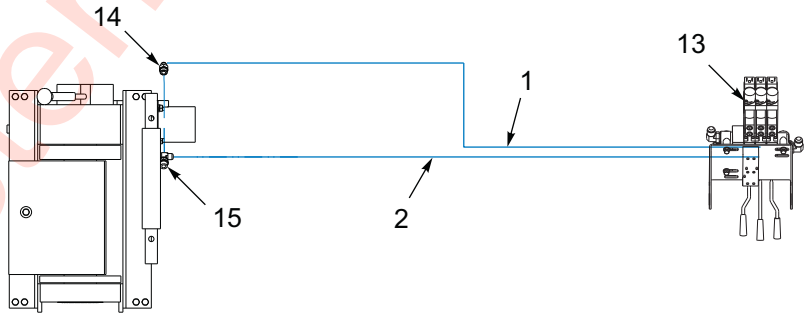

HYDRAULIC SYSTEM

Figure 1-71: Winch Installation - 20K Spring Tension (BRADEN)

Eastern Wrecker Sales Inc

Winch Installation - 20K Spring Tension (BRADEN)

ITEM	PART NO.	DESCRIPTION	QTY
	3-873-010140-01	WINCH, 20K SPRING TENSION	- -
1	1-397-010301170	HOSE ASSEMBLY 1/2 X 170	1
2	1-397-010302172	HOSE ASSEMBLY 1/2 X 172	1
3	1-512-010005-05	NUT, HEX LOCK 3/8-16	3
4	1-512-010005-09	NUT, HEX LOCK 1/2-13 GRB	9
5	1-654-010051-06	SCREW, HEX HEAD CAP 3/8-16 X 1-1/4 GR5	3
6	1-654-010055-04	SCREW, HEX, 1/2-13 UNC X 1-3/4 GR5	10
7	1-654-010055-16	SCREW, HEX HEAD CAP 1/2-13 X 5-1/2 GR5	1
8	1-861-010032-10	WASHER, FLAT 3/8N	6
9	1-861-010032-15	WASHER, FLAT, ZP/CD, 1/2W	2
10	1-861-010034-13	WASHER, SPLIT LOCK 1/2	2
11	100600	DECAL, WARNING, BRADEN WINCH **(SEE PAGE 1-5)**	1
12	102186	WINCH TENSIONER, 20K BRADEN SPRING	1
13	148241	VALVE ASSEMBLY, 3-SPOOL 400 **(SEE PAGE 1-28)**	- -
14	202702-10-8S	ADAPTER, #10 O-RING - #8 TUBE	1
15	2062-10-8S	ADAPTER, 90, #10 O-RING - #8 TUBE	1
16	3-155-010018-6	CABLE, 5/8, WITH LOOP, 85 FEET	- -
17	3-174-010038	CHAIN LINK, CONNECTING, 1/2	1
18	3-174-010039036	CHAIN, 1/2 X 36” GRD7	1
19	3-481-010007	MOTOR HYD. 12.9 CU. IN/REV, SAE B **(SEE PAGE 1-140)**	1
20	3-720-010010	SPRING COMPRESSION	1
21	3-873-010123	WINCH ASSEMBLY, 20,000LB. **(SEE PAGE 1-129)**	1
22	7HCGHT500	HOOK, CLEVIS, GRAB 1/2	1

Eastern Wrecker Sales Inc

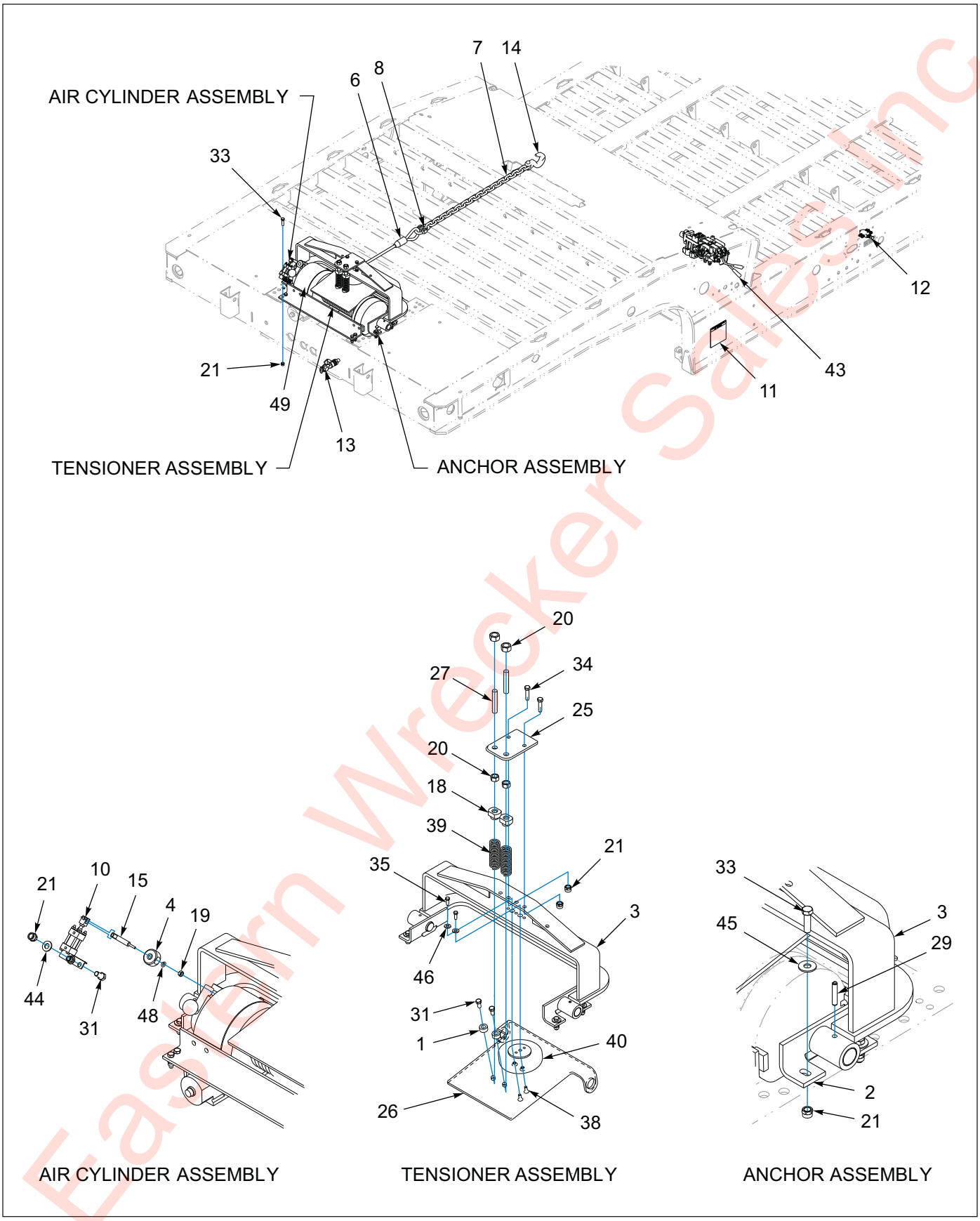

Eastern Wrecker Sales Inc

Figure 1-72: 20K Air Tension/Release (BRADEN) (1 of 3)

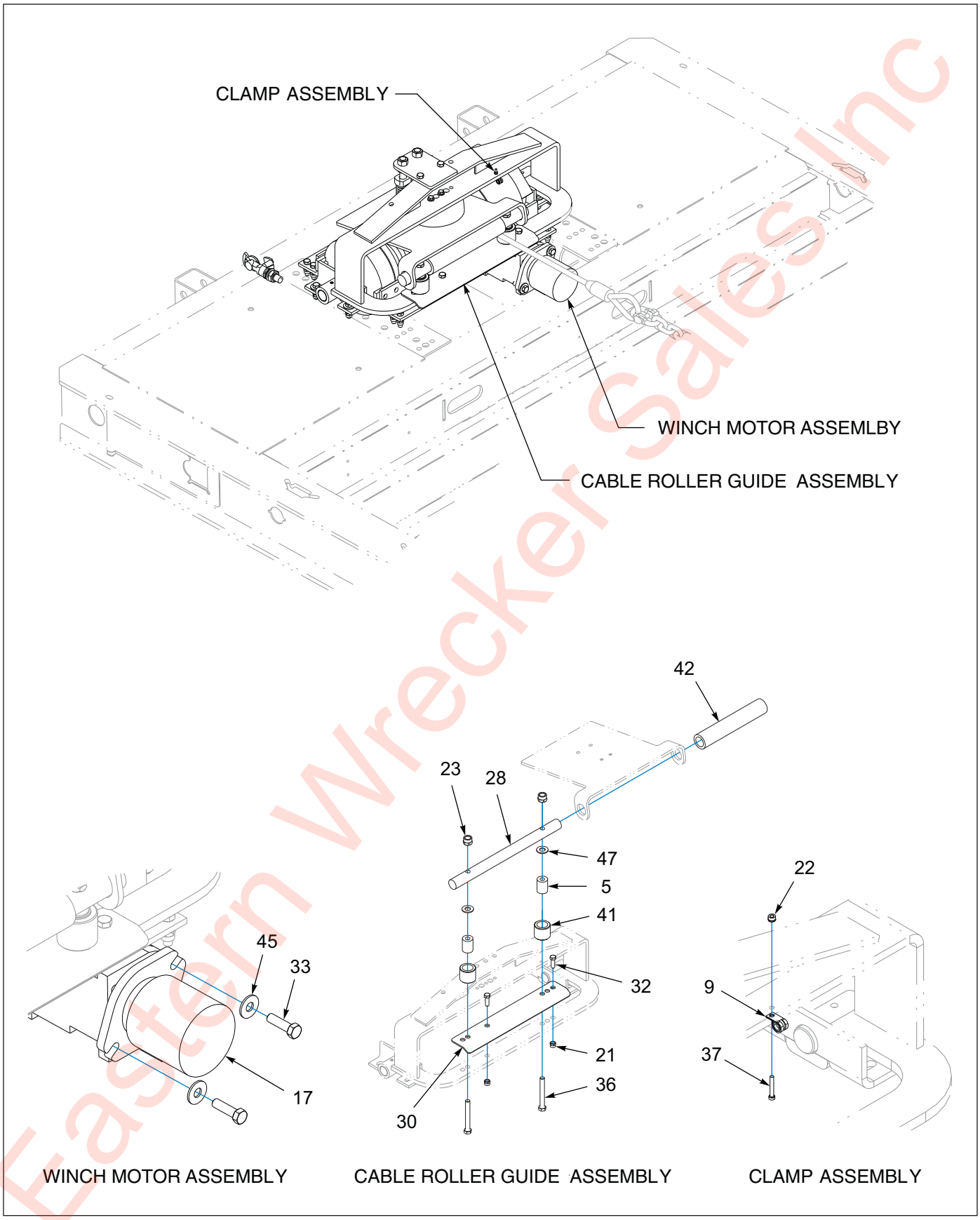

Eastern Wrecker Sales Inc

Figure 1-73: 20K Air Tension/Release (BRADEN) (2 of 3)

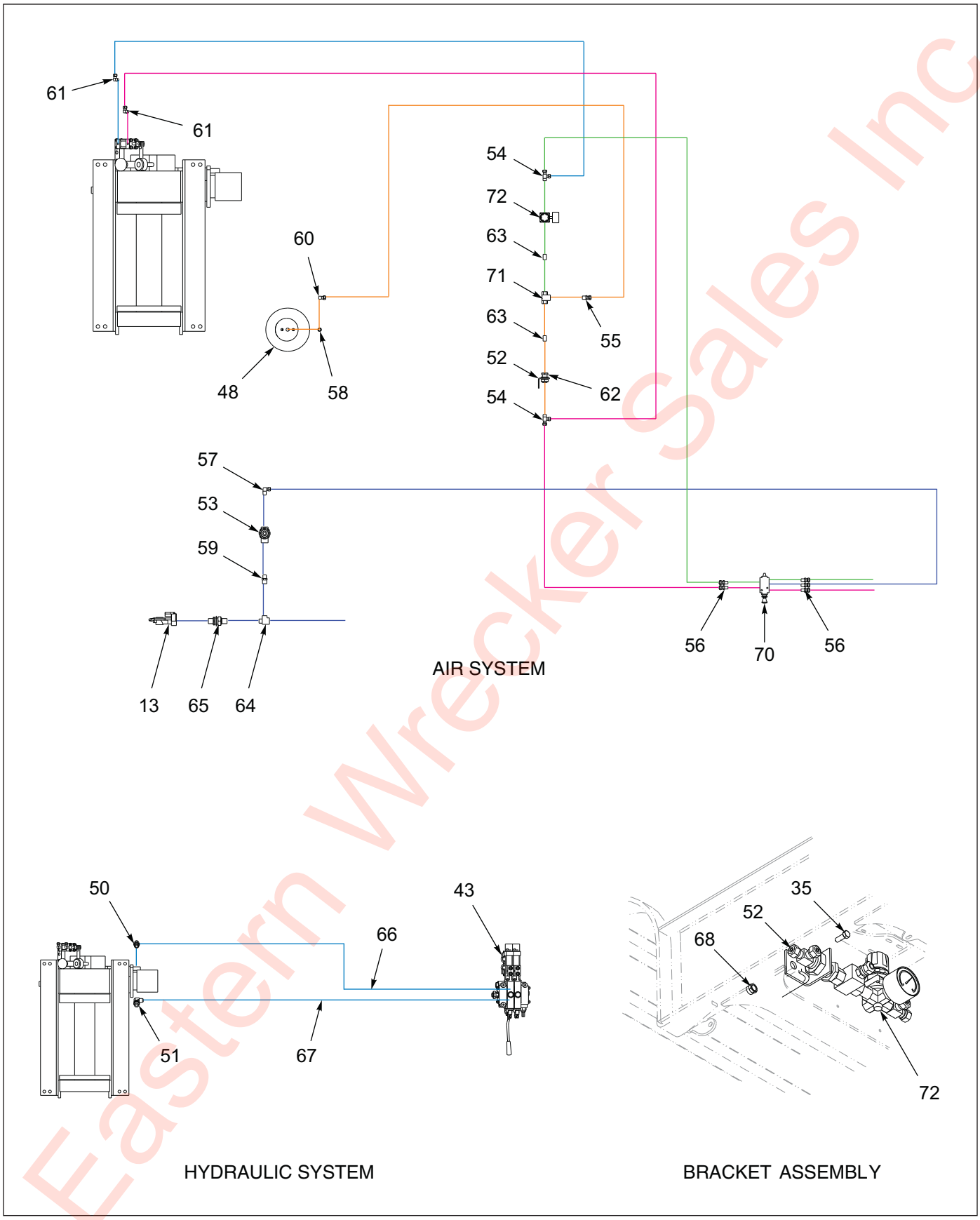

Eastern Wrecker Sales Inc

Figure 1-74: 20K Air Tension/Release (BRADEN) (3 of 3)

20K Air Tension/Release (BRADEN)

ITEM	PART NO.	DESCRIPTION	QTY.
	162415	WINCH INSTALLATION, 20K GUIDE AIR TENSION/RELEASE - STD	- -
1	3-014-010255	ANCHOR BUSHING F/W SPRING TENSION	2
2	119621	ANCHOR CABLE GUIDE WINCH **(NOT SHOWN)**	2
3	3-125-010465	BRACKET WELDMENT WINCH TENSIONER	1
4	3-150-010186	BUSHING WINCH REMOTE LEVER	1
5	3-150-010196	BUSHING, ROD ROLLER	2
6	3-155-010018-6	CABLE 85' W/ LOOP	- -
7	3-174-010039036	CHAIN 1/2 X 36 GR7	1
8	3-174-010038	CHAIN LINK CONNECTING 1/2	1
9	125892	SUPPORT CLAMP	1
10	107368	WINCH AIR SHIFT CYL **(SEE PAGE 1-143)**	1
11	100600	DECAL, WARNING WINCH	1
12	135184	DECAL, WINCH FREE SPOOL **(NOT SHOWN)**	1
13	108801	GLAD HAND, RED AIR	- -
14	7HCGHT500	HOOK, CLEVIS GRAB 1/2	1
15	107369	LEVER WINCH FREE SPOOL	1
16	#242 LOCKTITE	LOCKTITE, #242, BLUE REMOVABLE **(NOT SHOWN)**	.10
17	3-481-010007	MOTOR HYD. **(SEE PAGE 1-145)**	1
18	3-522-010017	NUT F/W SPRING TENSION	2
19	1-512-010007-05	NUT, HEX 1/4-20 GRB	1
20	1-512-010007-12	NUT, HEX 3/4-10 GRB	4
21	1-512-010005-09	NUT, HEX LOCK 1/2-13 GRB	18
22	1-512-010004-03	NUT, HEX LOCK #10-24	1
23	1-512-010005-13	NUT, HEX LOCK 5/8-11 GRB	2
24	119622	PIN, PIVOT WINCH ROLLER **(NOT SHOWN)**	2
25	3-565-011688	PLATE F/W SPRING TENSION	1
26	102187	PLATE, WINCH TENSIONER	1
27	RTR7999X4ZP	ROD THREADED	2
28	102188	ROD, PIVOTING GUIDE	1
29	1-647-010004255	PIN, SPRING SLOTTED 2 X 3/8 **(NOT SHOWN)**	2
30	143246	RUB BAR, CABLE GUIDE WINCH	1
31	1-654-010055-01	SCREW, HEX HEAD CAP 1/2-13 X 1 GR5	4
32	1-654-010055-03	SCREW, HEX HEAD CAP 1/2-13 X 1-1/2 GR5	2
33	1-654-010055-04	SCREW, HEX HEAD CAP 1/2-13 X 1-3/4 GR5	14
34	1-654-010055-05	SCREW, HEX HEAD CAP 1/2-13 X 2 GR5	2
35	1-654-010036-05	SCREW, HEX HEAD CAP 3/8-16 X 1 GR5	3
36	1-654-010059-15	SCREW, HEX HEAD CAP 5/8-11 X 5 GR5	2
37	1-654-010024055	SCREW, MACH. #10-24 X 1-1/4	1
38	1-654-010141-04	SCREW, HEX SOC. HEAD CTSK 3/8-16 X 1 GR8	2
39	3-720-010035	SPRING	2
40	3-720-010042	SPRING, AIR BAG, 6-1/2	1
41	3-831-010172	TUBE, ROLLER SIDE	2
42	3-831-010182	TUBE, ROLLER TOP - 600 **(20K)**	1
43	140802	VALVE ASSEMBLY	- -
44	1-861-010032-14	WASHER, FLAT 1/2N	2
45	1-861-010032-15	WASHER, FLAT 1/2W	6
46	1-861-010032-10	WASHER, FLAT 3/8N	2
47	1-861-010032-18	WASHER, FLAT 5/8N	2

Eastern Wrecker Sales Inc

20K Air Tension/Release (BRADEN)

ITEM	PART NO.	DESCRIPTION	QTY.
48	1-861-010034-09	WASHER, SPLIT LOCK 1/4	1
49	3-873-010123	WINCH ASSEMBLY 20K **(SEE PAGE 1-140)**	1
50	202702-10-8S	ADAPTER	1
51	2062-10-8S	ADAPTER 90	1
52	3-120-010445	BRACKET, PRESSURE REGULATOR	1
53	905-54-107	BRAKE PROTECTION VALVE	1
54	1-297-010011-02	FITTING, AIR M/RUN TEE	2
55	1-297-010007-05	FITTING, AIR 1/4	1
56	1-297-010007-04	FITTING, AIR, 1/4 TUBE X X 1/8 NPT	5
57	1-297-010008-07	FITTING, AIR 90	1
58	1-297-010031-02	FITTING, BRASS PIPE	1
59	1-297-010019-05	FITTING, BRS PIPE HEX 3/8 X 1/4	1
60	1-297-010032-03	FITTING, AIR 90	1
61	1-297-010008-05	FITTING, AIR 90	2
62	1-297-010022-02	FITTING, AIR ANCHOR	1
63	1-297-010020-02	FITTING, BRASS PIPE	2
64	1-297-010018-03	FITTING, 1/4 TEE	1
65	55B61	FRAME UNION	- -
66	1-397-010301170	HOSE ASSEMBLY 1/2 X 170	1
67	1-397-010302172	HOSE ASSEMBLY 1/2 X 172	1
68	1-512-010005-05	NUT, HEX LOCK 3/8-16	1
69	1-833-010001	NYLON TUBING 1/4 OD	21
70	139552	VALVE AIR, 5WAY/2POS, 1/8 NPT	1
71	3-843-010039-02	VALVE AIR SHUTTLE 1/4	1
72	3-626-010004	REGULATOR, AIR PRESSURE	1

Eastern Wrecker Sales Inc

Table provided for general use.

NOTES:

Eastern Wrecker Sales Inc

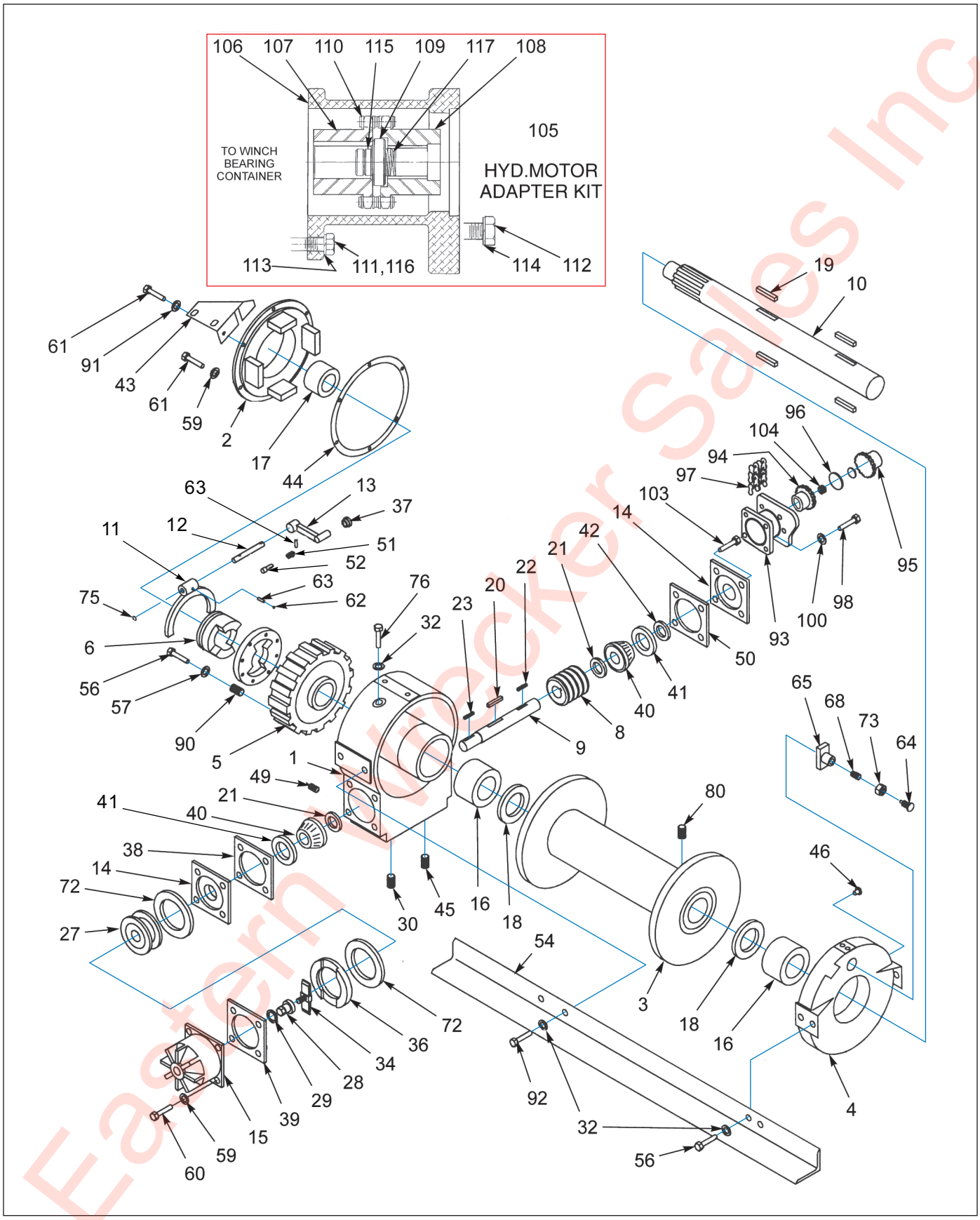

Figure 1-75: Winch Items - 20,000Lb. (BRADEN)

Eastern Wrecker Sales Inc

Winch Items - 20,000Lb. (BRADEN)

ITEM	PART NO.	DESCRIPTION	QTY.
	3-873-010123	WINCH 20,000# W/BOLT-ON ANGLES	- -
1	81078	WORM HOUSING ASSEMBLY	1
2	106956	COVER ASSEMBLY WORM HOUSING	1
3	----	DRUM CABLE	1
4	81077	LEG ASSEMBLY BEARING	1
5	11434	WORM, GEAR RIGHT	1
6	11421	CLUTCH, SLIDING	1
7	11419	DRIVE, CLUTCH	1
8	154166	WORM RIGHT	1
9	----	SHAFT, WORM	1
10	139479	SHAFT, CABLE DRUM	1
11	11440	FORK SHIFTER	1
12	11441	SHAFT SHIFTER	1
13	26976	HANDLE SHIFTER	1
14	124549	CONTAINER BEARING	2
15	----	COVER WORM BRAKE	1
16	18035	BUSHING	2
17	11425	BUSHING	1
18	11420	RING, RETAINING	2
19	163472	DRUM, KEY CABLE	4
20	11402	KEY, WORM	1
21	11407	SPACER, WORM	2
22	23367	KEY, SPROCKET	1
23	10078	KEY, ROTOR	1
27	81080	ROTOR ASSEMBLY, BRAKE	1
28	11599	ADJUSTING NUT, WORM BRAKE	1
29	12465	O-RING	1
30	----	PLUG, FILLER	1
32	----	WASHER, LOCK	10
34	81081	SPRING ASSEMBLY, SAFETY BRAKE	1
36	11431	PLATE, PRESSURE	1
37	18022	KNOB, SHIFTER	1
38	11429	GASKET	4
39	11446	GASKET	2
40	18033	BEARING CONE	2
41	18034	BEARING CUP	2
42	12073	SEAL GREASE	1
43	12783	BRACKET SHIFTER	1
44	11411	COVER GASKET HOUSING	1
45	19045	PLUG DRAIN	1
46	18047	FITTING GREASE	1
48	----	PLUG VENT	1
49	----	PLUG LEVEL	1
50	11430	GASKET	4
51	11310	SPRING SHIFTER KNOB	1
52	11309	STEM SHIFTER KNOB	1
54	----	ANGLE FRONT BASE	1
55	----	ANGLE REAR BASE **(NOT SHOWN)**	1

Eastern Wrecker Sales Inc

Winch Items - 20,000Lb. (BRADEN)

ITEM	PART NO.	DESCRIPTION	QTY.
56	----	CAPSCREW	16
57	----	WASHER, LOCK	8
58	----	CAPSCREW	4
59	----	WASHER, LOCK	3
60	----	CAPSCREW	4
61	----	CAPSCREW	6
62	12146	PLUG, EXPANSION	- -
63	13028	ROLLPIN	- -
64	11398	SCREW, ADJUSTING	1
65	88005	SHOE ASSEMBLY DRAG BRAKE	1
68	18002	SHOE ASSEMBLY DRAG BRAKE	1
72	11426	DISC, FRICTION	2
73	11791	NUT, JAM	1
75	12767	PLUG, EXPANSION	- -
76	----	CAPSCREW	2
77	----	SAE PLATE-AMU7-16F **(NOT SHOWN)**	1
78	----	PLATE, WARNING **(NOT SHOWN)**	1
79	----	SCREW, DRIVE **(NOT SHOWN)**	4
80	139478	SCREW, SET	1
90	----	INSERT THREAD	8
91	----	LOCKWASHER	1
92	----	CAPSCREW **(NOT SHOWN)**	5
93	23144	ADAPTER - MOTOR	1
94	23081	COUPLING HALF-WINCH	1
95	----	COUPLING HALF-MOTOR	1
96	23078	SPACER - CONSTANT	1
97	13424	ROLLER, CHAIN	1
98	----	CAPSCREW	4
99	----	CAPSCREW **(NOT SHOWN)**	4
100	----	LOCKWASHER	4
101	----	LOCKWASHER **(NOT SHOWN)**	4
102	----	SPACER - VARIABLE	2
103	----	CAPSCREW	4
104	----	SPRING - SPACER	1
105	----	HYD. MOTOR ADAPTER KIT, 20,000# WINCH **(ITEMS 106-117)**	1
106	23144	ADAPTER, MOTOR	1
107	23081	COUPLING HALF, WINCH	1
108	110448	COUPLING HALF, MOTOR	1
109	23078	SPACER, CONSTANT	1
110	13424	CHAIN ROLLER	1
111	----	CAPSCREW	4
112	----	CAPSCREW	4
113	----	LOCKWASHER	4
114	----	LOCKWASHER	4
115	110451	SPACER	1
116	----	CAPSCREW	4
117	110452	SPRING SPACER	1

Eastern Wrecker Sales Inc

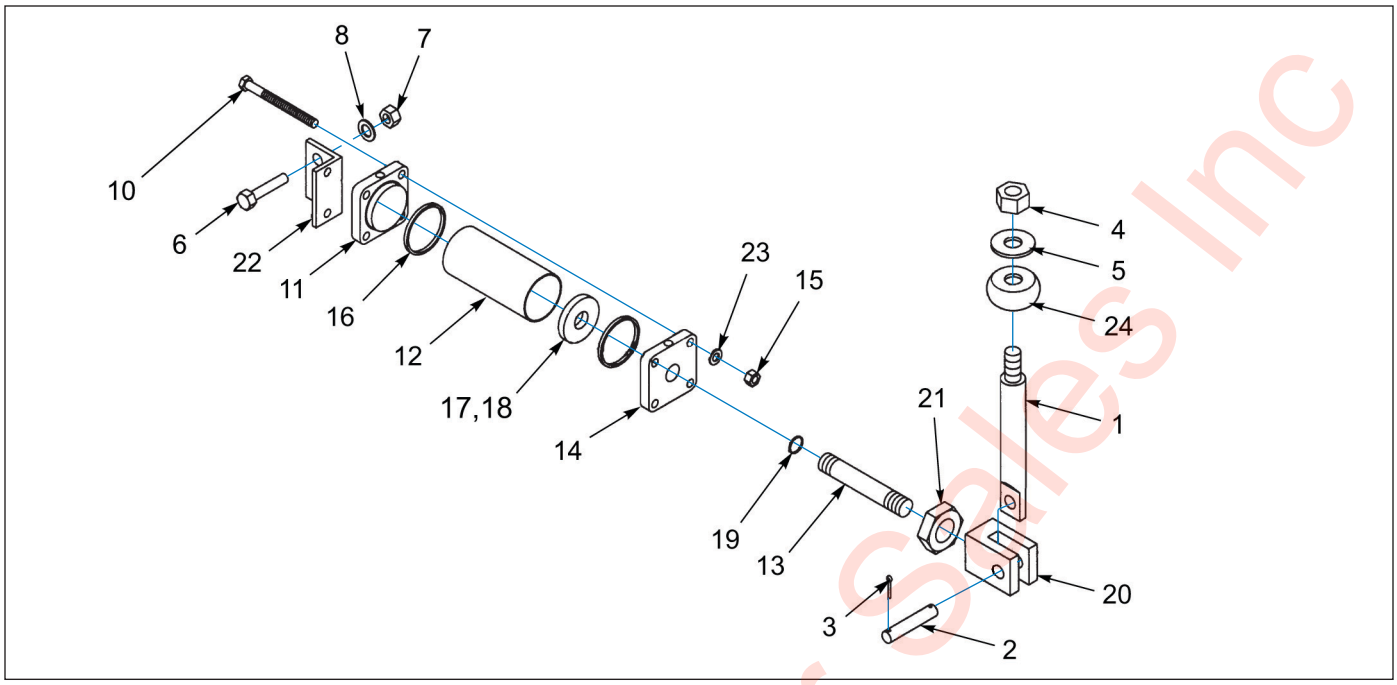

Figure 1-76: Winch - Air Shift Cylinder

Winch - Air Shift Cylinder

ITEM	PART NO.	DESCRIPTION	QTY.
	107368	CYLINDER, AIR W/ BRACKET **(ITEMS 2, 3 & 6-23)**	- -
1	107369	LEVER WINCH FREE SPOOL	1
2	-----	PIN	1
3	-----	COTTER PIN	1
4	1-512-010007-05	NUT, HEX 1/4-20 GRB	1
5	1-861-010034-09	WASHER, SPLIT LOCK 1/4	1
6	1-654-010055-01	SCREW, HEX HEAD CAP 1/2-13 X 1 GR5	2
7	1-512-010005-09	NUT, HEX LOCK 1/2-13 GRB	2
8	1-861-010032-14	WASHER, FLAT 1/2	2
9	C2001	CYLINDER **(ITEMS 10-23)**	1
10	-----	CAPSCREW49	4
11	-----	REAR COVER PLATE	1
12	-----	TUBE	1
13	-----	PISTON ROD	1
14	-----	FRONT COVER PLATE	1
15	-----	NUT	4
16	-----	BACK-UP-RING	2
17	-----	O-RING	1
18	-----	PISTON	1
19	-----	O-RING	1
20	1974	CLEVIS	1
21	-----	NUT	1
22	2389	BRACKET	1
23	-----	LOCKWASHER	4
24	3-150-010186	BUSHING WINCH REMOTE LEVER	1
	-----	O-RING KIT FOR CYLINDER	- -

Eastern Wrecker Sales Inc

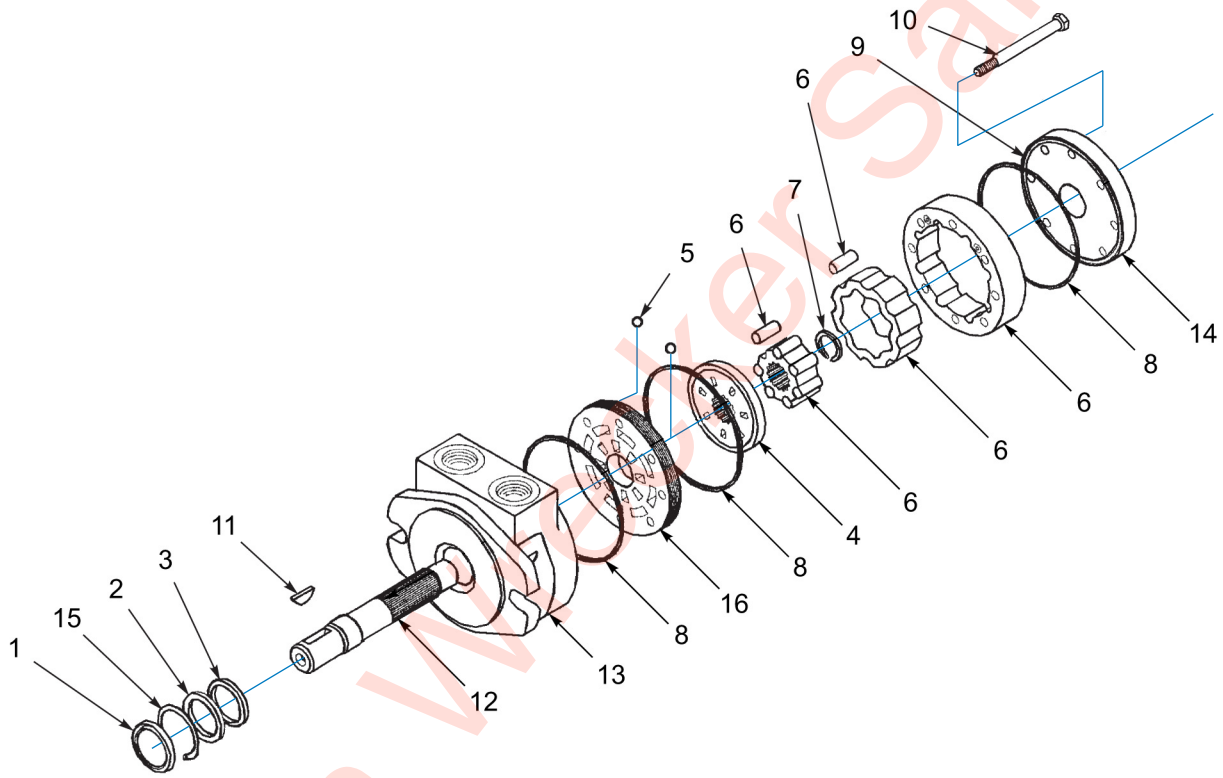

Figure 1-77: Winch - Motor Assembly

Eastern Walker Sales Inc

Winch - Motor Assembly

ITEM	PART NO.	DESCRIPTION	QTY.
	3-481-010006	MOTOR, HYDRAULIC - 12K WINCH	- -
	3-481-010007	MOTOR, HYDRAULIC - 20K WINCH	- -
1	-----	SEAL DUST	1
2	-----	BACK-UP RING	1
3	-----	SEAL LIP	1
4	-----	ROTARY VALVE	1
5	-----	CHECK VALVE BALL	2
6	-----	IGR ASSEMBLY - 20K WINCH	1
6	-----	IGR ASSEMBLY - 12K WINCH	1
7	-----	SNAP RING	1
8	1046	SQUARE RING SEAL	3
9	-----	PLUG VENT W/O-RING	1
10	-----	BOLTS HEX - 20K WINCH	8
10	-----	BOLTS HEX - 12K WINCH	8
11	-----	KEY WOODRUFF	1
12	-----	SHAFTFOR - 20K WINCH	1
12	-----	SHAFTFOR - 12K WINCH	1
13	-----	BODY/BEARING ASSEMBLY - 20K WINCH	1
13	-----	BODY/BEARING ASSEMBLY - 12K WINCH	1
14	-----	COVER/BEARING ASSEMBLY	1
15	-----	SNAP RING SHAFT	1
16	-----	COMMUTATOR PLATE	1
16	2263	SEAL KIT BODY	1
16	-----	SEAL KIT BODY VITON	1

Eastern Wrecker Sales Inc

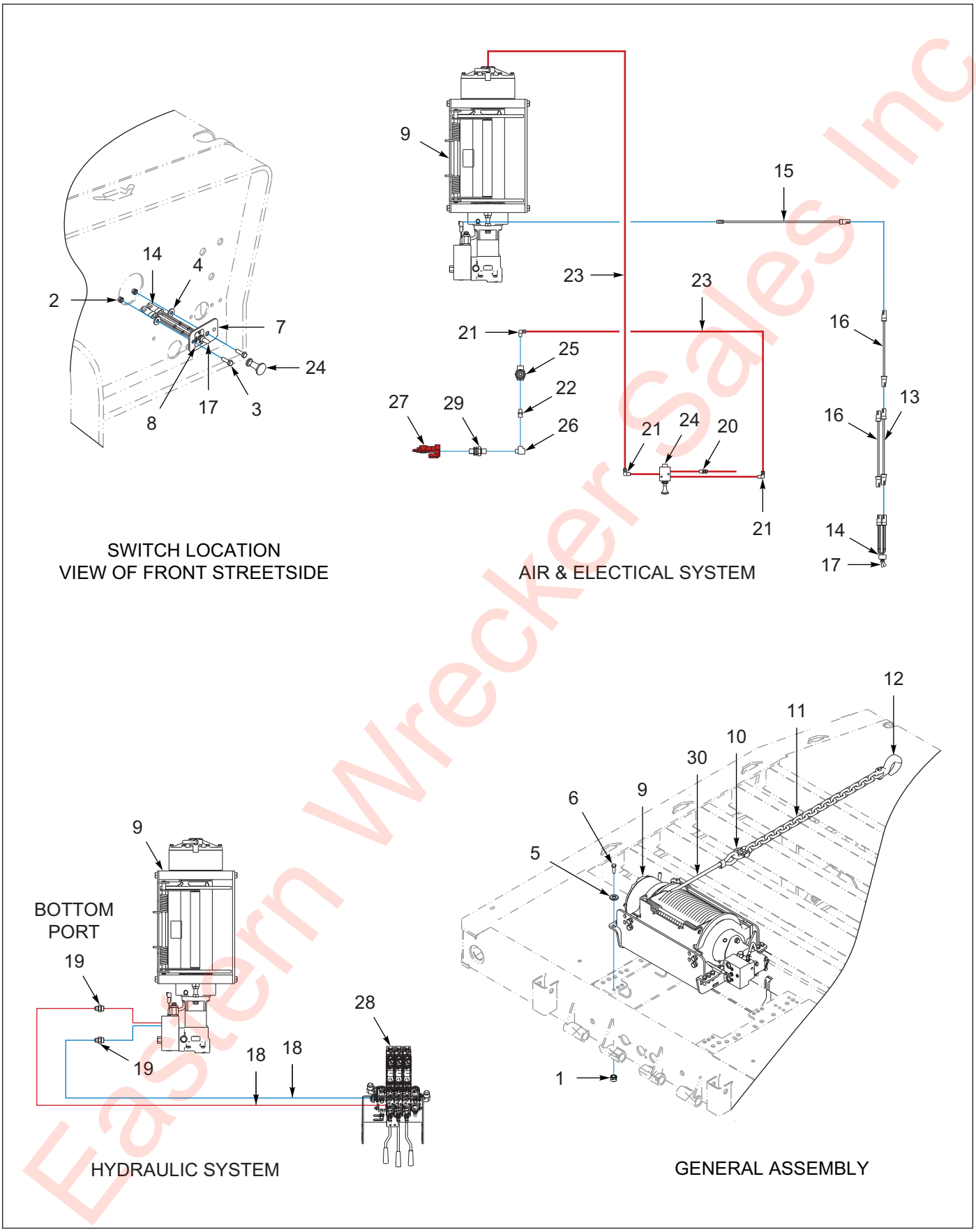

Figure 1-78: Winch Installation - 20K 2 Speed (Warn)

Eastern Wrecker Sales Inc

Winch Installation - 20K 2 Speed (Warn)

ITEM	PART NUMBER	DESCRIPTION	QTY
	167522	WINCH INSTL 20K WARN 2SP STD **(STANDARD DUTY) (REFERENCE ONLY)**	- -
	174175	WINCH INSTL 20K WARN 2SP HD **(HEAVY DUTY) (REFERENCE ONLY)**	- -
1	1-512-010002-09	NUT,HEX SLFLKG,1/2-13,GR C,ZP	12
2	1-512-010005-03	NUT HEX SLFLKG GRB 5/16-18	2
3	1-654-010049-05	SCREW HX CP 5/16-18UNCX1 GR5	2
4	1-861-010032-09	WASHER, FLAT 5/16 W ZP/CD	2
5	1-861-010032-14	WASHER, FLAT 1/2" N ZP/CD	12
6	108439	SCREW HX CP 1/2-13UNCX1-1/2G8	12
7	137987	MOUNT ELECTRIC SWITCH 410	1
8	174043	DECAL, WINCH, HI/LO	1
9	174553	WINCH ASSY WARN 20K	1
10	3-174-010038	CHAIN LINK CONNECTING 1/2	1
11	3-174-010039036	CHAIN 1/2X36" GRD 7 21LINKS	1
12	7HCGHT500	HOOK CLEVIS GRAB 1/2 GR70	1
13	150111	HARNESS 300 IN MALE.FEMALE	1
14	150117	SWITCH ASSY LIGHT GROTE	1
15	164053	HARNESS,102"BRANCH,WORK LIGHT	1
16	3-368-010252	HARNESS ASSY BKHD LIGHT EXT	2
17	81264	RUBBER BOOT FOR ELECT SWITCH	1
18	174188	HOSE ASSY 1/2X182 SAE37 STR90 **(STANDARD DUTY)**	2
18	1-397-010302220	HOSE ASSY,1/2X220,SAE37,STR90 **(HEAVY DUTY)**	2
19	202702-10-8S	ADAPTER, #10 O-RING #8 TUBE	2
20	1-297-010007-05	FITTING, AIR, 1/4TUBEX1/4NPT	1
21	1-297-010008-07	FITTING AIR 90 1/4TUBEX1/4NPT	3
22	1-297-010019-05	FITTING,BRS PIPE,HX 3/8X1/4	1
23	1-833-010001	TUBING NYLON 1/4 OD **(BY THE FOOT)**	34
24	134657	VALVE AIR 3WAY/2POS 1/4NPT	1
25	905-54-107	BRAKE PROTECTION VALVE	1
26	1-297-010018-03	FITTING,3/8 BRASS PIPE,ST TEE	1
27	108801	GLAD HAND-RED-AIR	1
28	139525	VALVE ASSY 3-SPOOL 400	1
29	55B61	FRAME UNION	1
30	3-155-010018-6	CABLE 5/8 W/LOOP 85FT	1

Eastern Wrecker Sales Inc

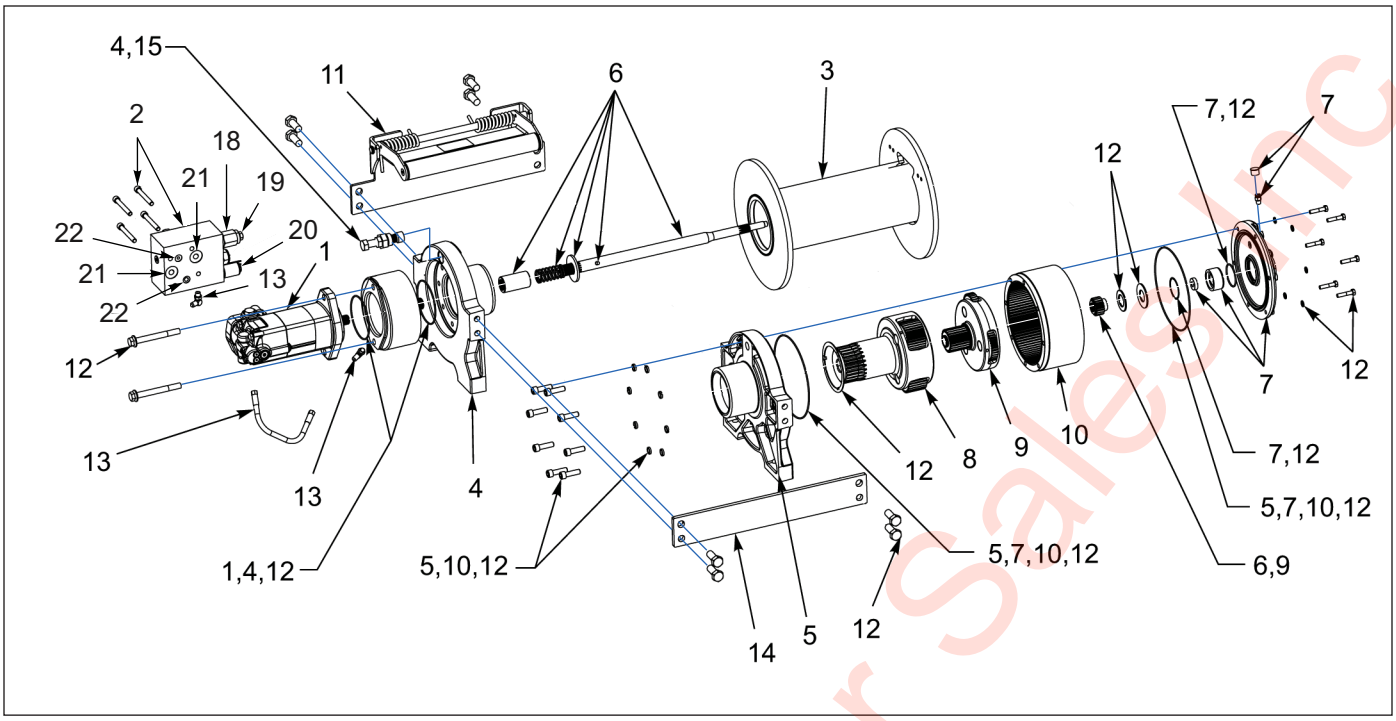

Figure 1-79: Winch Items - 20K 2 Speed (WARN)

Winch Items - 20K 2 Speed (WARN)

ITEM	PART NO.	DESCRIPTION	QTY.
	167521	WINCH 20K WARN 2 SPEED	- -
1	178718	MOTOR-HYD 11.9 CIR 2K STD	1
2	178715	SVC KIT-MANIFOLD-HYD	1
3	162208	SVC KIT - DRUM ASSY 20K LONG	1
4	178999	SVC KIT - DRM RETRD_DRM SPPRT	1
5	162210	SVC KIT-DRUM SPRT GEAR END N	1
6	162211	SVC KIT-DRIVE SHAFT LONG N	1
7	162941	SVC KIT - END HSG ASSY - AIR	1
8	162213	SVC KIT-CARRIER STG2	1
9	162214	SVC KIT-CARRIER STG1	1
10	162215	SVC KIT-RING GEAR	1
11	162216	SVC KIT-TENSIONER	1
12	179000	SVC KIT - HARDWARE-SEAL	1
13	162218	SVC KIT-HOSE HYD	1
14	162219	SVC KIT-TIE PLATE LONG	1
15	179001	SVC KIT - DRUM RETARDER	1
16	3-155-010018-6	CABLE 5/8 W/LOOP 85FT	1
		(WINCH INSTALLATION - SEE PAGE 1-147)	
17	162207	SVC KIT - BRAKE ASSEMBLY **(NOT SHOWN)**	1
18	199104	SOLENOID COIL 12V 2SP WARN	1
19	201642	SOLENOID CARTRIDGE VALVE 2SP	1
20	201643	OVERCENTER VALVE	1
21	201644	O-RING	2
22	201645	O-RING	2
23	201650	SET SCREW 3/8"X1/5" HEX SOCKET **(NOT SHOWN)**	2

Eastern Tecker Sales Inc

Table provided for general use.

NOTES:

Eastern Wrecker Sales Inc

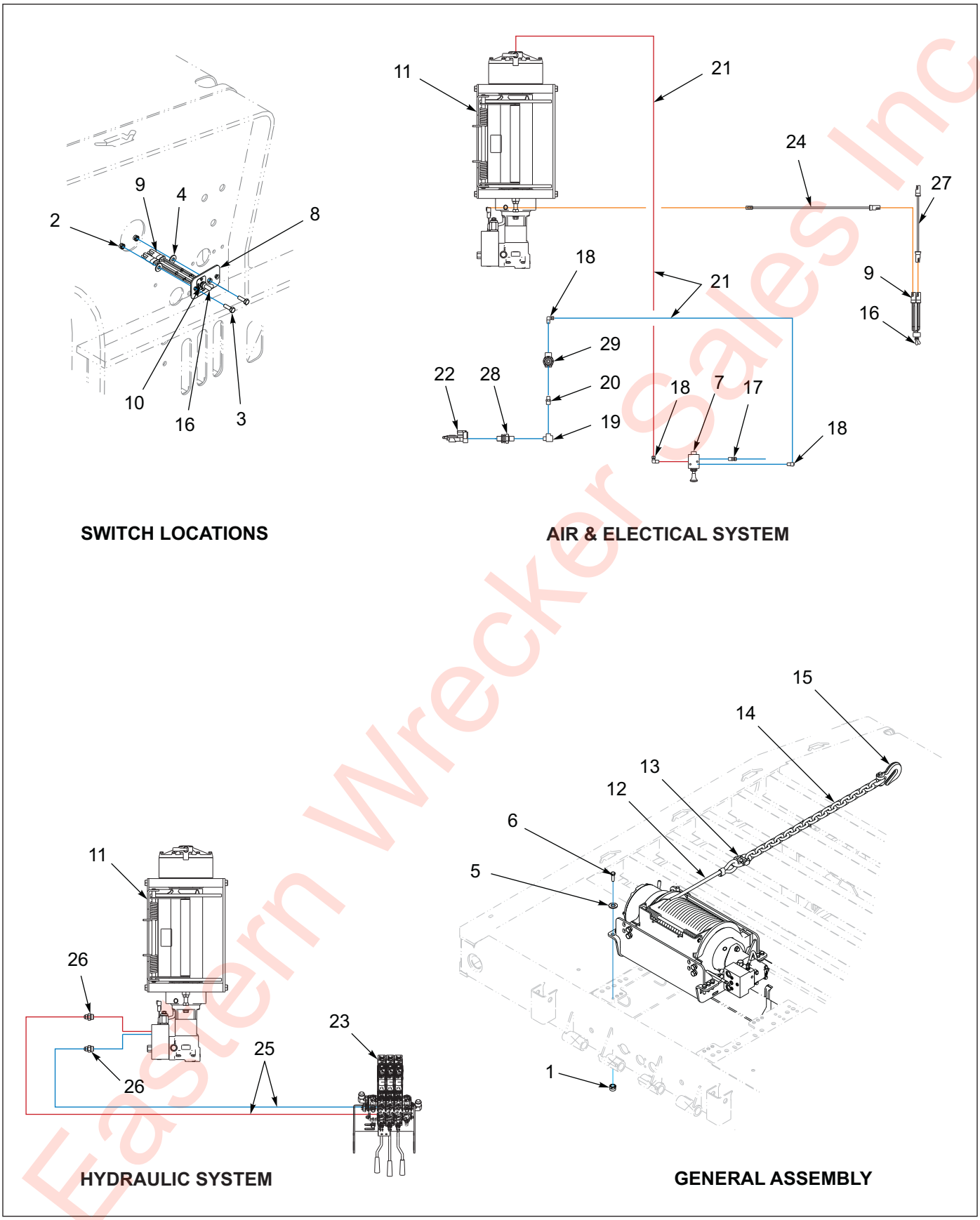

Figure 1-80: 30K 2 Speed (WARN)

Eastern Wrecker Sales Inc

30K 2 Speed (WARN)

ITEM	PART NO.	DESCRIPTION	QTY.
	172878	WINCH INSTALLATION, 30K 2 SPEED	- -
1	1-512-010002-09	NUT,HEX SLFLKG,1/2-13,GR C,ZP	12
2	1-512-010005-03	NUT HEX SLFLKG GRB 5/16-18	2
3	1-654-010049-05	SCREW HX CP 5/16-18UNCX1 GR5	2
4	1-861-010032-09	WASHER, FLAT 5/16 W ZP/CD	2
5	1-861-010032-14	WASHER, FLAT 1/2" N ZP/CD	12
6	108439	SCREW HX CP 1/2-13UNCX1-1/2G8	12
7	134657	VALVE, AIR 3WAY/POS, 1/4NPT	1
8	137987	MOUNT ELECTRIC SWITCH 410	1
9	150117	SWITCH ASSY LIGHT GROTE	- -
10	174043	DECAL, WINCH, HI/LO	1
11	174552	WINCH ASSY WARN 30K 2 SPEED	1
12	132833	CABLE 5/8 W/LOOP 85FT	- -
13	3-174-010059	CHAIN LINK CONNECTING 1/2	1
14	3-174-010060036	CHAIN 5/8X36" GRD 7 80	1
15	1-382-010035-06	HOOK CLEVIS GRAB 5/8 GRD80	1
16	81264	RUBBER BOOT FOR ELECT SWITCH	- -
17	1-297-010007-05	FITTING, AIR, 1/4TUBEX1/4NPT	1
18	1-297-010008-07	FITTING AIR 90 1/4TUBEX1/4NPT	3
19	1-297-010018-03	FITTING,3/8 BRASS PIPE,ST TEE	- -
20	1-297-010019-05	FITTING,BRS PIPE,HX 3/8X1/4	1
21	1-833-010001	TUBING NYLON 1/4 OD	34
22	108801	GLAD HAND-RED-AIR	- -
23	139525	VALVE ASSY 3-SPOOL 400	- -
24	164053	HARNESS,102"BRANCH,WORK LIGHT	1
25	174188	HOSE ASSY 1/2X182 SAE37 STR90	2
26	202702-10-8S	ADAPTER, #10 O-RING #8 TUBE	2
27	3-368-010252	HARNESS ASSY BKHD LIGHT EXT	2
28	55B61	FRAME UNION	- -
29	905-54-107	BRAKE PROTECTION VALVE	1

Eastern Wrecker Sales Inc

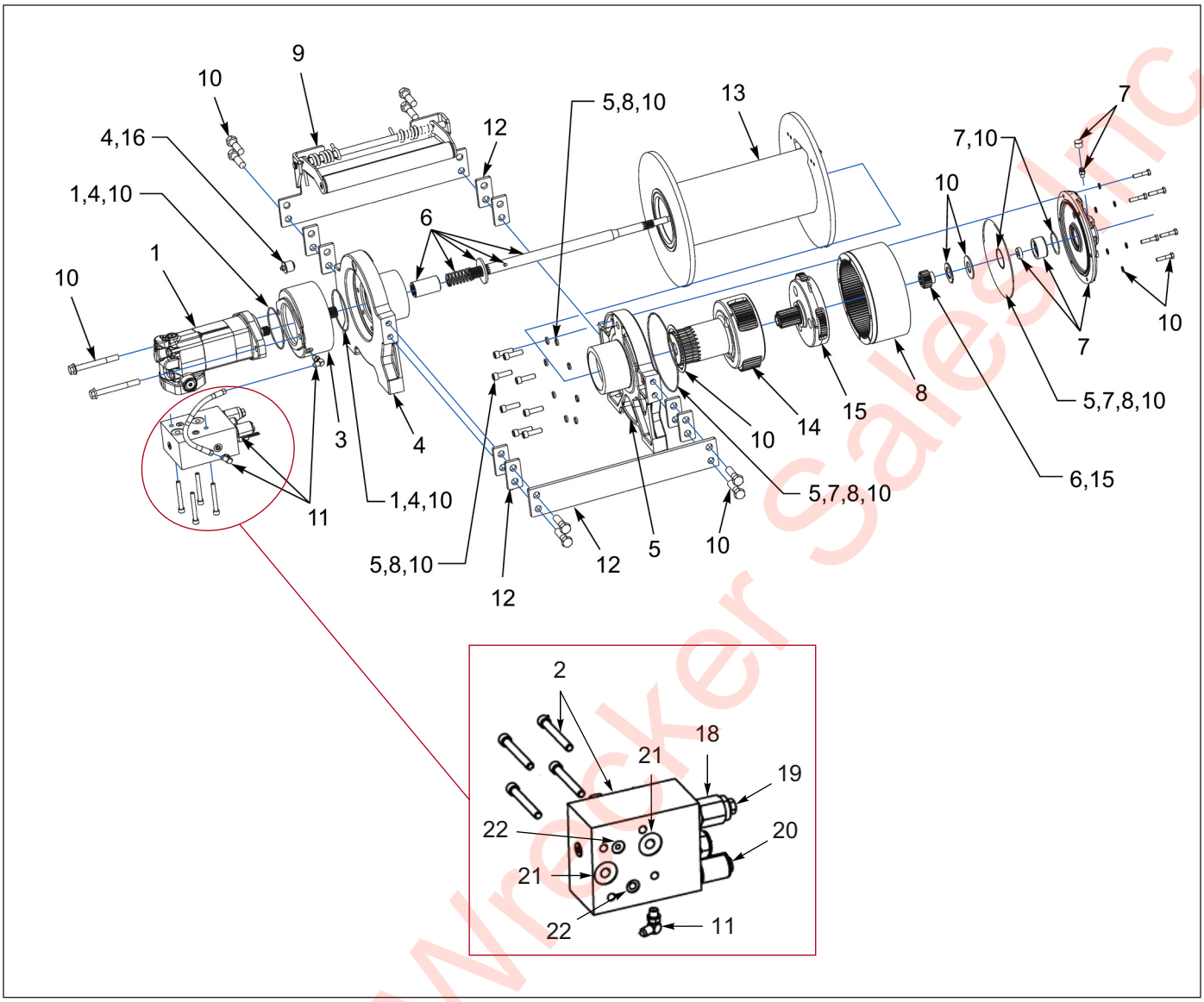

Figure 1-81: Winch Items - 30K 2 Speed (WARN)

Winch Items - 30K 2 Speed (WARN)

ITEM	PART NO.	DESCRIPTION	QTY.
	172877	WINCH 30K WARN 2 SPD AIR	- -
1	178714	SVC KIT-MOTOR-HYD	1
2	178715	SVC KIT-MANIFOLD-HYD	1
3	162207	SVC KIT - BRAKE ASSEMBLY	1
4	178716	SVC KIT-DRUM SPRT MTR END RET	1
5	162210	SVC KIT-DRUM SPRT GEAR END N	1
6	162211	SVC KIT-DRIVE SHAFT LONG N	1
7	162941	SVC KIT - END HSG ASSY - AIR	1
8	162215	SVC KIT-RING GEAR	1
9	162216	SVC KIT-TENSIONER	1
10	162217	SVC KIT-HARDWARE SEAL	1
11	162218	SVC KIT-HOSE HYD	1
12	162219	SVC KIT-TIE PLATE LONG	1

Eastern Wrecker Sales Inc

Winch Items - 30K 2 Speed (WARN)

ITEM	PART NO.	DESCRIPTION	QTY.
13	162942	SVC KIT - DRUM ASSY 30K LONG	1
14	162943	SVC KIT-CARRIER STG2-6.0-6.0N	1
15	162944	SVC KIT-CARRIER STG1-6.0-6.0N	1
16	178717	SVC KIT-EXPANSION PLUG 1" RBR	1
17	132833	CABLE ASSY 5/8X85FLEX-X9	- -
		(WINCH INSTALLATION - SEE PAGE 1-151)	
18	199104	SOLENOID COIL 12V 2SP WARN	1
19	201642	SOLENOID CARTRIDGE VALVE 2SP	1
20	201643	OVERCENTER VALVE	1
21	201644	O-RING	1
22	201645	O-RING	2
23	201650	SET SCREW 3/8"X1/5" HEX SOCKET **(NOT SHOWN)**	2

Eastern Wrecker Sales Inc

Landing Gear

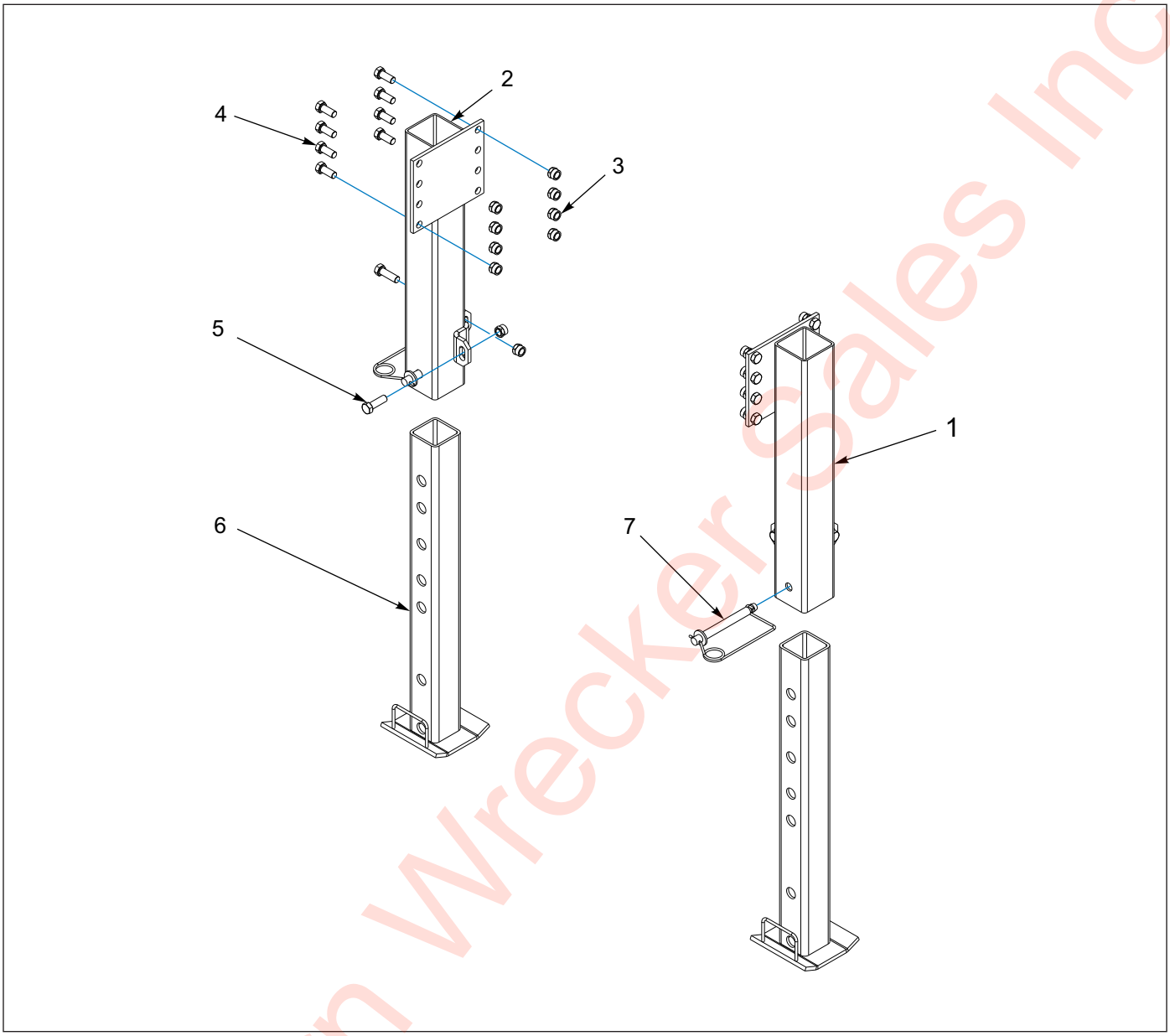

Figure 1-82: Landing Gear Installation - Bolt-On Park Stand

Landing Gear Installation - Bolt On Park Stand

ITEM	PART NO.	DESCRIPTION	QTY.
	104243	PARK STAND INSTALLATION, BOLT-ON	- -
1	112678	PARK STAND WELDMENT, LH FRONT PIN	1
2	112679	PARK STAND WELDMENT, RH FRONT PIN	1
3	1-512-010005-13	NUT, HEX LOCK 5/8-11 GRB	20
4	1-654-010059-03	SCREW, HEX HEAD CAP 5/8-11 X 1-1/2 GR5	16
5	1-654-010059-05	SCREW, HEX HEAD CAP 5/8-11 X 2 GR5	4
6	3-725-010058	STAND, PARK INSIDE WELDMENT	2
7	346SL	LOCK HITCH PIN	2

Eastern Wrecker Sales Inc

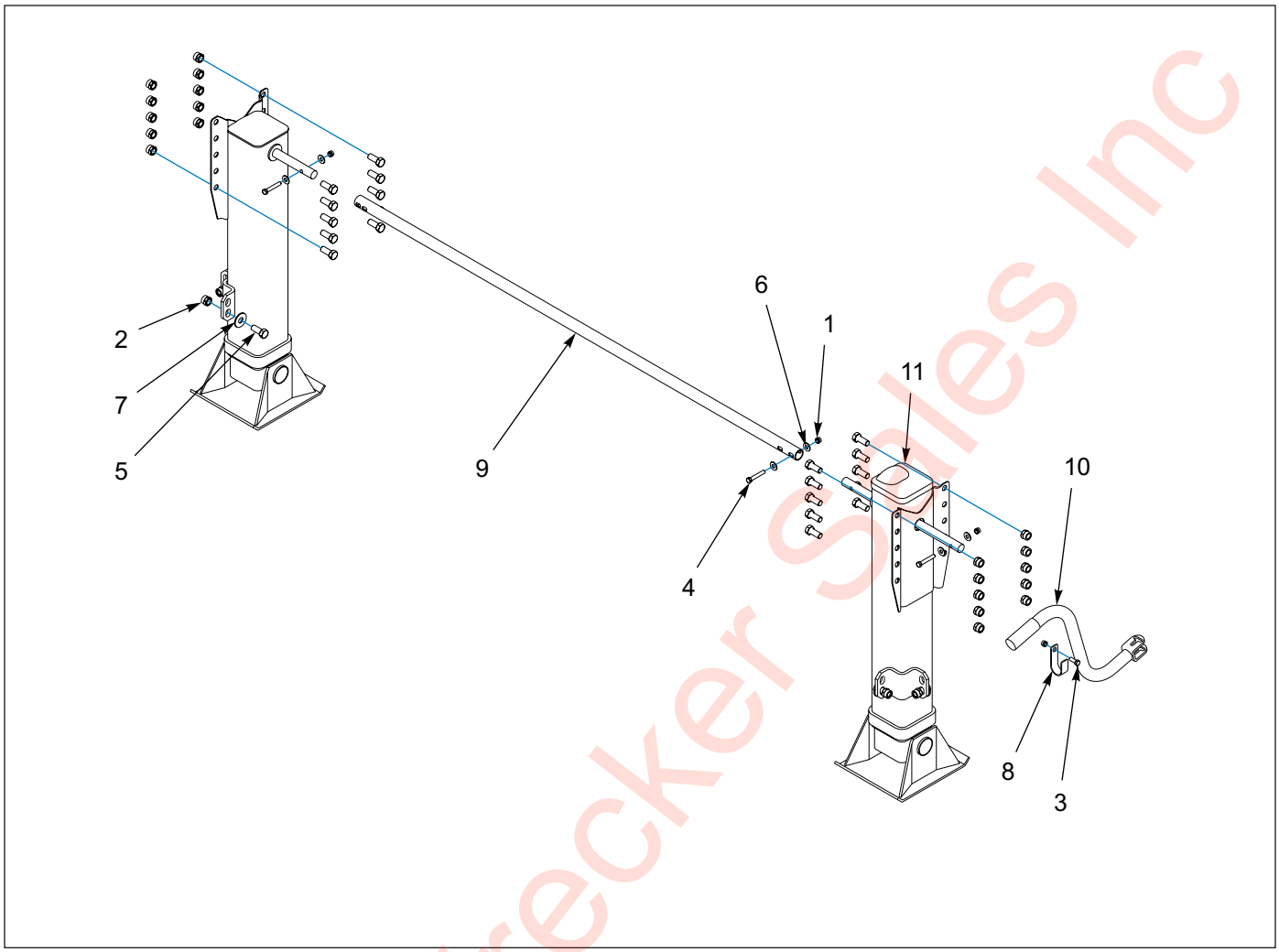

Figure 1-83: Landing Gear Installation - Jost 410

Landing Gear Installation - Jost 410

ITEM	PART NO.	DESCRIPTION	QTY.
	117558	LANDING GEAR INSTALLATION	- -
1	1-512-010005-05	NUT, HEX LOCK 3/8-16 GRB	4
2	1-512-010005-13	NUT, HEX LOCK 5/8-11 GRB	24
3	1-654-010051-05	SCREW, HEX HEAD CAP 3/8-16 X 1 GR5	1
4	1-654-010051-10	SCREW, HEX HEAD CAP 3/8-16 X 2-1/4 GR5	3
5	1-654-010059-03	SCREW, HEX HEAD CAP 5/8-11 X 1-1/2 GR5	24
6	1-861-010032-11	WASHER, FLAT 3/8W	6
7	1-861-010032-19	WASHER, FLAT 5/8W	4
8	117559	CLIP, LANDING GEAR HANDLE	1
9	117561	CROSS-SHAFT LANDING GEAR	1
10	119949	HANDLE, CRANK 2 SPEED LANDING GEAR	1
11	139256	LANDING GEAR WELDMENT 2 SPEED	1

Eastern Wrecker Sales Inc

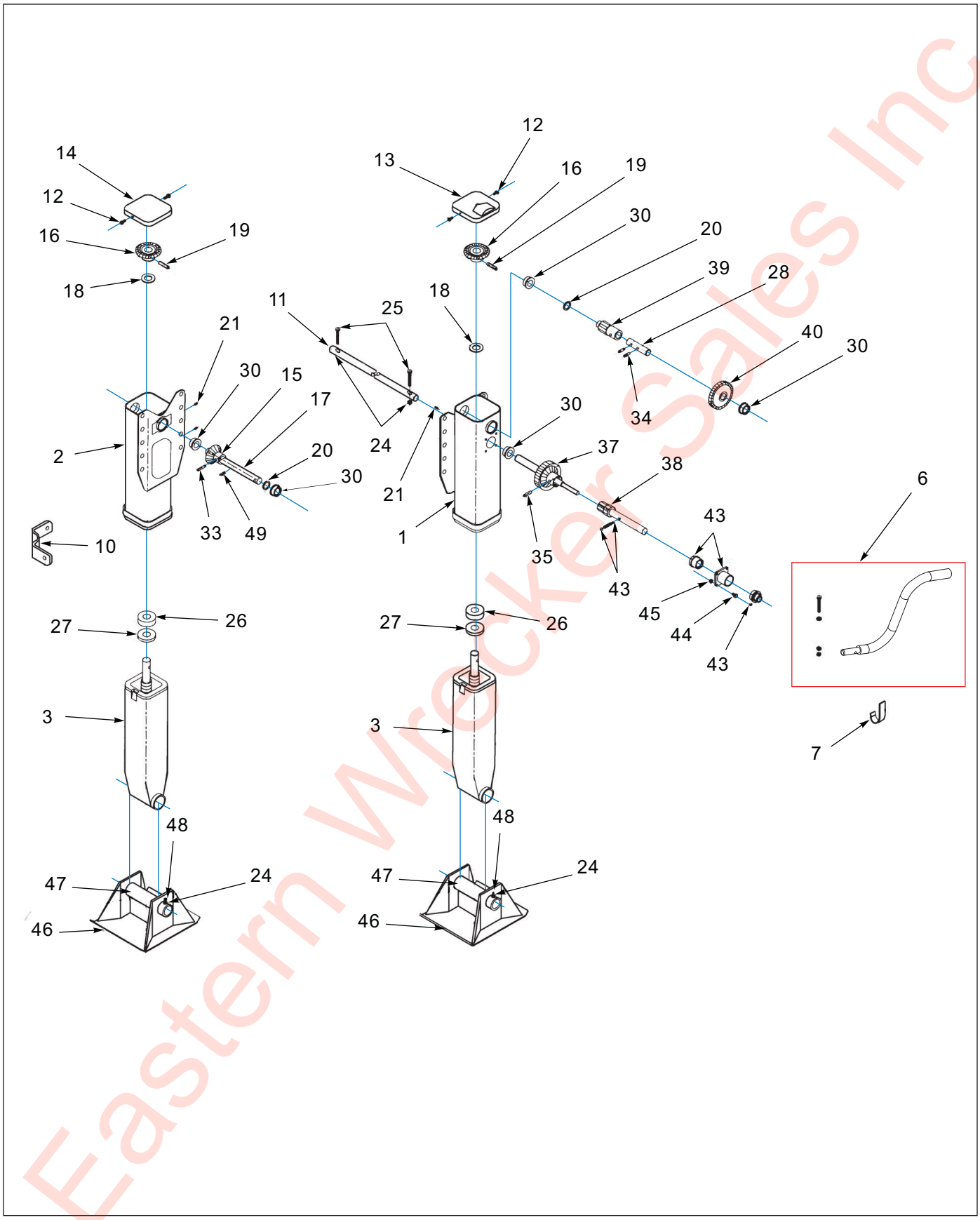

Figure 1-84: Landing Gear Installation - Jost #A401T19

Eastern Wrecker Sales Inc

Landing Gear Installation - Jost #A401T19

ITEM	PART NO.	DESCRIPTION	QTY.
	116800	LANDING GEAR JOST #A401T19	- -
1	-----	OUTER HOUSING - 2 SPEED	1
2	-----	OUTER HOUSING - 1 SPEED	1
3	-----	INNER LEG ASSEMBLY - STANDARD	2
6	109161	CRANK 930 MODIFICATION	1
7	109711	CRANK HANGER	1
10	109712	BRACE LUG - W	2
11	-----	INTERMEDIATE CROSS SHAFT	1
12	-----	COVER SCREW	4
13	-----	COVER - 2 SPEED	1
14	-----	COVER - 1 SPEED	1
15	-----	PINION GEAR	1
16	-----	BEVEL GEAR	2
17	-----	PINION SHAFT - 1 SPEED	1
18	-----	THRUST WASHER	2
19	-----	GROOVED PIN	2
20	-----	SPACER WASHER	2
21	-----	GREASE FITTING	4
23	-----	STRUT BRACE **(NOT SHOWN)**	4
24	A10038.7	SELF LOCKING NUT	2
25	-----	CROSS SHAFT BOLT - 3/8 X 2 GR5	2
26	-----	THRUST BEARING	2
27	-----	COLLAR	2
28	-----	OUTPUT SHAFT	1
30	-----	BUSHING	5
33	-----	ROLL PIN 3/8 X 1-1/2	1
34	-----	SPIRAL PIN	2
35	-----	ROLL PIN - 3/8 X 1-3/4	1
36	-----	OUTPUT CLUSTER SHAFT	1
37	-----	OUTPUT CLUSTER GEAR	1
38	214441	INPUT GEAR SHAFT	1
39	-----	OUTPUT SPUR GEAR	1
40	-----	INPUT SPUR GEAR	1
43	163502	SHIFT HOUSING SERVICE KIT	1
44	-----	SHIFT HOUSING BOLT	4
45	-----	SELF LOCKING NUT	4
46	C10256	SHOE - 10 X 10 X 4-1/2	2
47	114983	SHOE AXLE	2
48	A10037.3	HEX HEAD BOLT	2
49	-----	ROLL PIN - 1/4 X 1-1/4	1
50	137974	RH LANDING LEG ASSEMBLY **(NON-GEAR) (NOT SHOWN)**	1
50	225284	LH LANDING LEG ASSEMBLY **(CRANK SIDE) (NOT SHOWN)**	- -

Eastern Wrecker Sales Inc

Dock Levelers

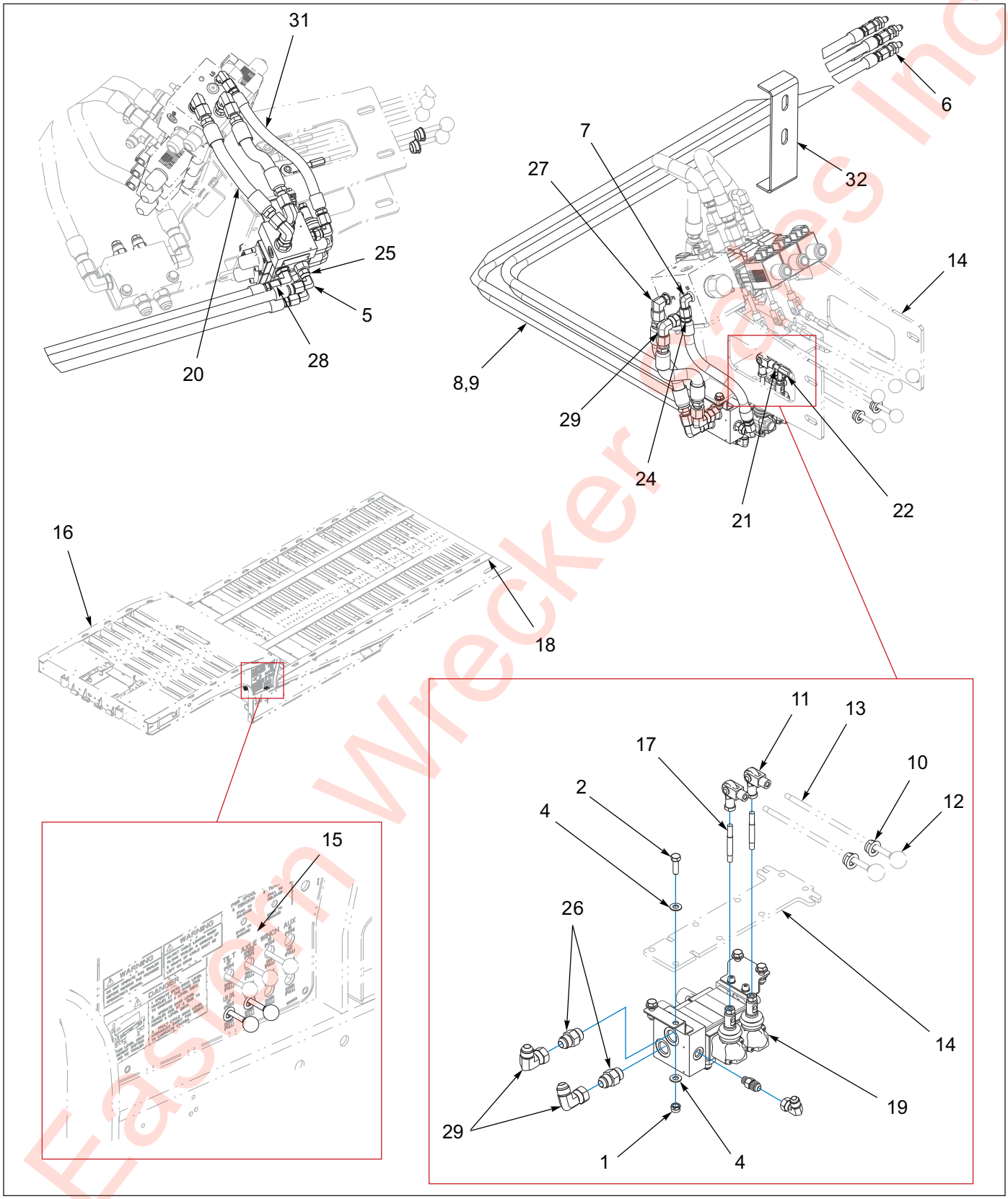

Figure 1-85: Dock Level Installation

Eastern Wrecker Parts Inc

Dock Level Installation

ITEM	PART NO.	DESCRIPTION	QTY.
	189674	HYD D/L, 400A-41-102 **(REF. ONLY)**	- -
	189676	HYD D/L, 400A-48/50CA-102/108 **(REF. ONLY)**	- -
1	1-512-010005-03	NUT HEX SLFLKG GRB 5/16-18	4
2	1-654-010049-05	SCREW HX CP 5/16-18UNCX1 GR5	4
3	1-796-010003-02	TIE, STRAP, PLASTIC .18X14.0 **(NOT SHOWN)**	14
4	1-861-010032-08	WASHER,FLAT 5/16 ZP	8
5	102-0031	ADAPTER,90 JIC SWIVEL #6	3
6	102-1097	37 FLARE BULKHEAD/37 FLARE	4
7	102-1238	ADAPTOR,90-#4 O-RING/#6 JIC	1
8	103166	HOSE ASSY 3/8X252 SAE37 STR **(USED W/ 189674)**	4
9	122813	HOSE ASSY 3/8X332,SAE37,STR **(USED W/ 189676)**	4
10	178444	BUSHING NYLON INSERT 9/16ID	2
11	186875	CLEVIS JOINT,ROD ENDS M8.1.25	2
12	186877	KNOB,1" ROUND,M8X1.25 THD	- -
13	186878	ROD HANDLE, M8 X 1.25 ENDS	- -
14	186886	VALVE ASSY, 3 SP, 35 GPM, SOLE	- -
15	186889	PLACARD, CONTROL PANEL, 400A	- -
16	186901	WLDMT, GOOSENECK, US 400	- -
17	186902	STUD M8X1.25X65MM,DBL THD	2
18	189015	FRAME WLDMT 440A-53-102	- -
19	189260	VALVE, 2 SPOOL, MOTOR, MANUAL	1
20	193909	HOSE ASSY 1/2X12 #8JIC STR	1
21	193910	STUD M8-1.25X50MM DBLE THD	2
22	193911	COUPLING NUT,M8-1.25X24MM ZINC	2
23	202702-4-6S	ADAPTER, #4 O-RING TO #6 JIC	1
24	202702-6-8S	ADAPTER, #6 SAE X #8 JIC	1
25	202702-8-6S	ADAPTER #8 O-RING TO #6 TUBE	2
26	202702-8-8S	ADAPTER #8 O-RING TO #8 TUBE	2
27	2062-6-8S	ADAPTER 90" 562 O-RING-.75JIC	1
28	2062-8-6S	ELBOW,90,#8 SAE X #6 JIC	2
29	2071-8-8S	ADAPTER90 #8 FLR SWIVEL #8JIC	3
30	1-822-010001	TRIM 1350 3/8 BLK FINE PEBBLE **(NOT SHOWN)**	3
31	51031-21	HOSE ASSY 3/8X12-7/8 SAE37STR	1
32	3-181-010006	HOSE CLAMP	- -

Eastern Wholesale Sales Inc

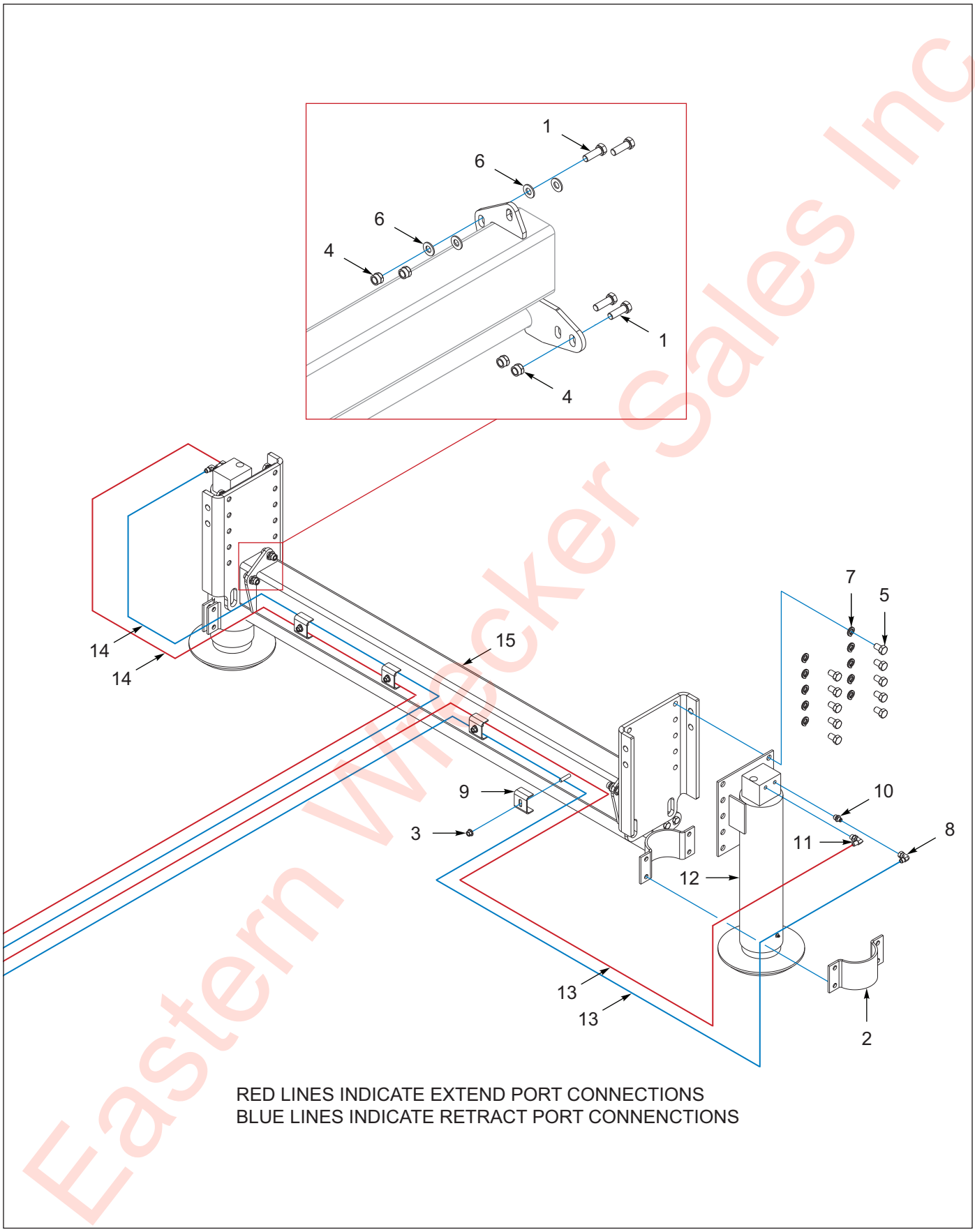

Eastern Wrecker Sales Inc

Figure 1-86: Dock Leveler Assembly - Single 60K

Dock Leveler Assembly - Single 60K

ITEM	PART NO.	DESCRIPTION	QTY.
	121498	DOCK LEVEL ASSY US410 SGL 60K	- -
	174179	DOCK LEVEL ASSY 455-120 60K	- -
	189525	DOCK LEVEL ASSY 400-120 60KSB	- -
1	B1821BH050C175N	SCREW HX CP1/2-13X1-3/4GR8 ZP	8
2	100348	MTG BRKT FOR CYL 3-242-010058 **(INCLUDES 2 BRACKETS, 4 BOLTS, 4 NUTS, 4 SPACERS)**	2
3	1-510-010001	NUT, 3/8-16 UNC FLG LOCK GR G	4
4	1-512-010005-09	NUT,HEX,SLFLKG, 1/2-13 GRB	8
5	1-654-010059-01	SCREW,HX CP,5/8-11UNCX1 GR5 **(121498 REQ 16 EACH)**	20
6	1-861-010032-14	WASHER, FLAT 1/2" N ZP/CD	8
7	1-861-010034-15	WASHER,LKG,HLCL SPR,5/8 **(121498 REQ 16 EACH)**	20
8	138155	ADAPTER 90 #4 JIC	2
9	2-181-010001	HOSE CLAMP	4
10	202702-6-4S	ADAPTER,STR,#6 O-RING X #4JIC	2
11	2062-6-4S	ADAPTER, 90, #6SAE X #4 JIC	2
12	3-242-010205	CYLINDER,HYD,DK LVLR, 4X15 **(INCLUDES ITEM 2)**	2
13	1-397-010262-5	HOSE ASSY,1/4 JIC 37 ENDS 220 **(STREETSIDE 121498)**	2
13	174184	HOSE ASSY 1/4 X 232 1/4JIC 37 **(STREETSIDE)**	2
14	122540	HOSE ASSY 1/4X240 **(CURBSIDE 121498)**	2
14	174185	HOSE ASSY 1/4 X 270 1/4JIC 37 **(CURBSIDE)**	2
15	121402	MOUNT WLDMT,DOCK LEVEL, 410 **(121498)**	1
15	174181	MOUNT WLDMT, DOCK LEVEL455-120 **(174179)**	1
15	189524	MOUNT DOCK LEVEL 400-120SB **(189525)**	1

Eastern Wrecker Sales Inc

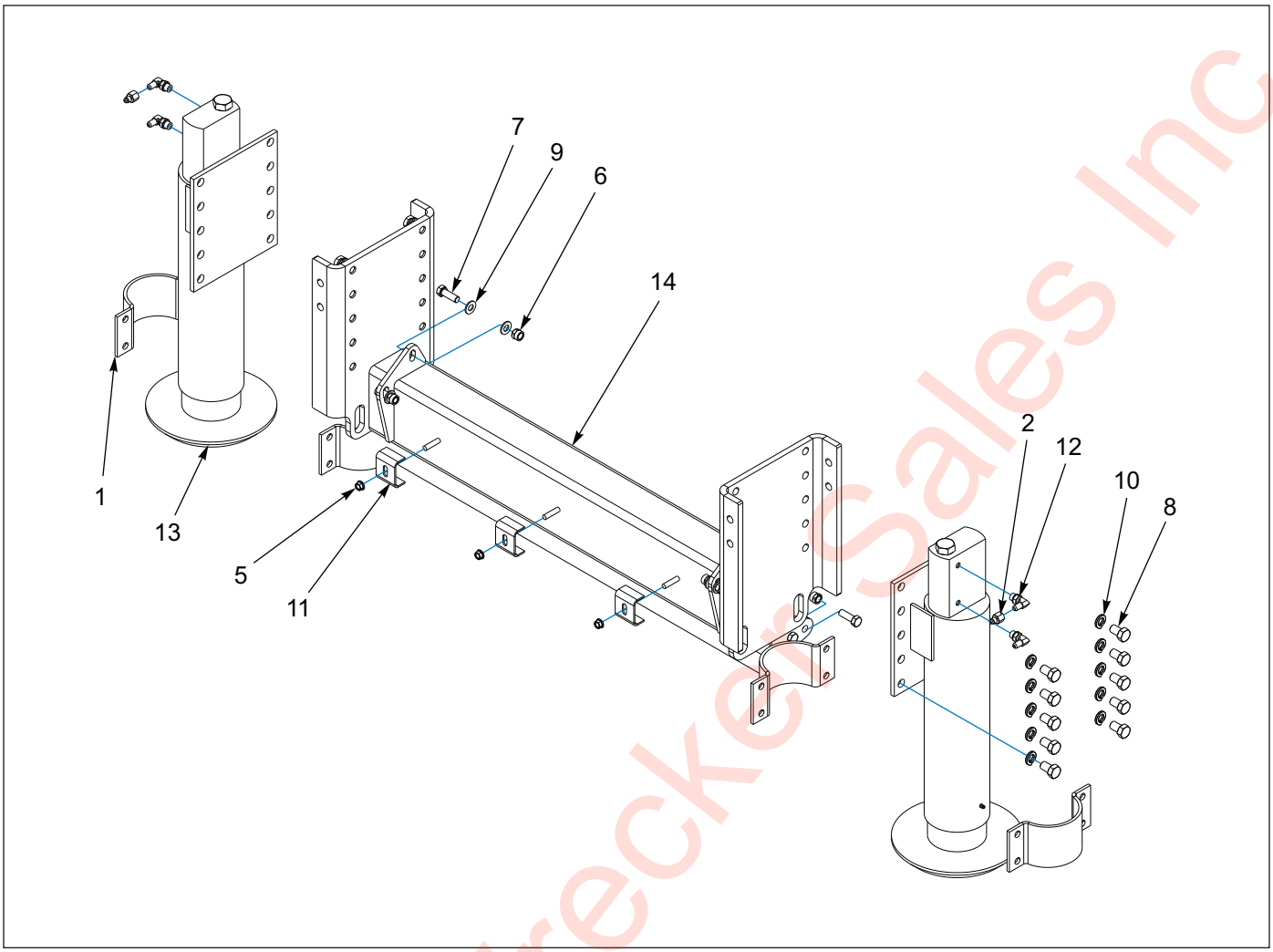

Figure 1-87: Dock Leveler Assembly - Single 60K (400-102 Big Brake)

Dock Leveler Assembly - Single 60K (400-102 Big Brake)

ITEM	PART NO.	DESCRIPTION	QTY.
	130851	DOCK LEVEL ASSEMBLY SINGLE 60K	- -
1	100348	MOUNTING BRACKET FOR CYLINDER	- -
2	1-007-010058	ADAPTER, 90° 3/8 ELBOW W/ RESTR	2
3	1-394-010001	HOSE, ABRASION SLEEVE X 2 **(NOT SHOWN)**	- -
4	1-397-010262-5	HOSE ASSEMBLY 1/4 X 216 **(NOT SHOWN)**	2
5	1-510-010001	NUT, FLANGE LOCK 3/8-16 GRB	3
6	1-512-010005-09	NUT, HEX LOCK 1/2-13 GRB	8
7	1-654-010055-03	SCREW, HEX HEAD CAP 1/2-13 X 1-1/2 GR5	8
8	1-654-010059-01	SCREW, HEX HEAD CAP 5/8-11 X 1 GR5	20
9	1-861-010032-14	WASHER, FLAT 1/2N	8
10	1-861-010034-15	WASHER, SPLIT LOCK 5/8	20
11	2-181-010001	CLAMP, HOSE	3
12	2062-6-4S	ADAPTER, 90	4
13	3-242-010205	CYLINDER, HYDRAULIC 4X15 **(W/ COLLAR) (SEE PAGE 1-164)**	2
14	3-482-010472	MOUNT WELDMENT, DOCK LEVEL 60K	1
15	122540	HOSE ASSEMBLY 1/4 X 240 **(NOT SHOWN)**	2

Eastern Wrecker Sales Inc

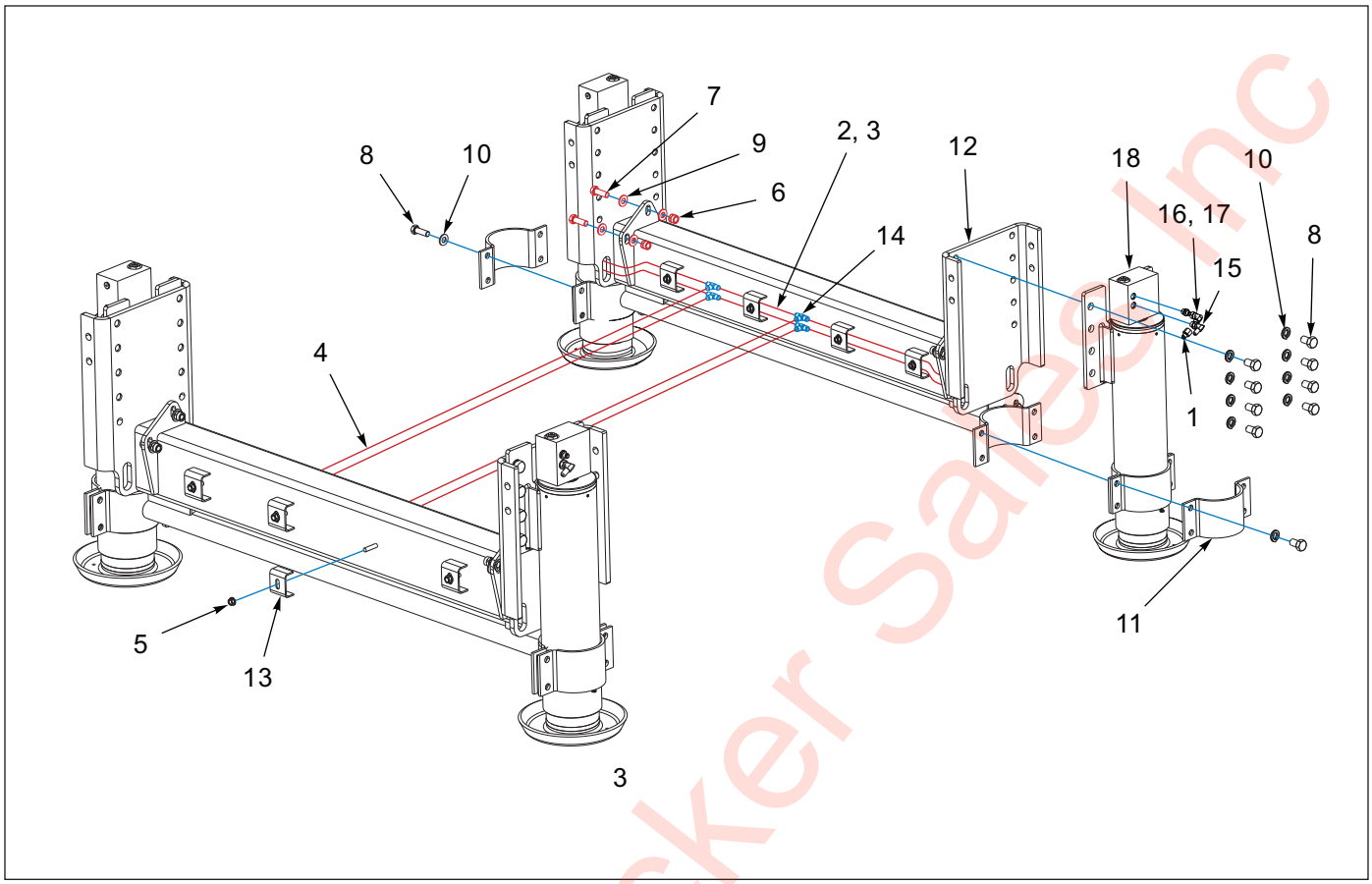

Figure 1-88: Dock Leveler Assembly - Single 120K

Dock Leveler Assembly - Single 120K

ITEM	PART NO.	DESCRIPTION	QTY.
	126537	DOCK LEVEL ASSEMBLY SINGLE 120K	- -
1	1-007-010058	ADAPTER, 90° 3/8 ELBOW W/ RESTR	4
2	1-397-010262-5	HOSE ASSEMBLY 1/4 X 216	4
3	1-397-010262028	HOSE ASSEMBLY 1/4 X 28	4
4	1-397-010262100	HOSE ASSEMBLY 1/4 X 100	4
5	1-510-010001	NUT, FLANGE LOCK 3/8-16 GRB	8
6	1-512-010005-09	NUT, HEX LOCK 1/2-13 GRB	16
7	1-654-010055-03	SCREW, HEX HEAD CAP 1/2-13 X 1-1/2 GR5	16
8	1-654-010059-01	SCREW, HEX HEAD CAP 5/8-11 X 1 GR5	32
9	1-861-010032-14	WASHER, FLAT 1/2N	16
10	1-861-010034-15	WASHER, SPLIT LOCK 5/8	32
11	100348	MOUNTING BRACKET FOR CYLINDER	- -
12	121402	MOUNT WELDMENT, D/L	2
13	2-181-010001	CLAMP, HOSE	8
14	2033-4-4S	ADAPTER, TEE	4
15	2062-6-4S	ADAPTER, 90	4
16	138155	ADAPTER, 90	4
17	202702-6-4S	ADAPTER, STRAIGHT	4
18	3-242-010205	CYLINDER, HYDRAULIC 4X15 **(W/ COLLAR) (SEE PAGE 1-164)**	4
19	1-394-010002	HOSE, ABRASION SLEEVE X 2-7/8 **(NOT SHOWN)**	- -

Eastern Wrecker Sales Inc

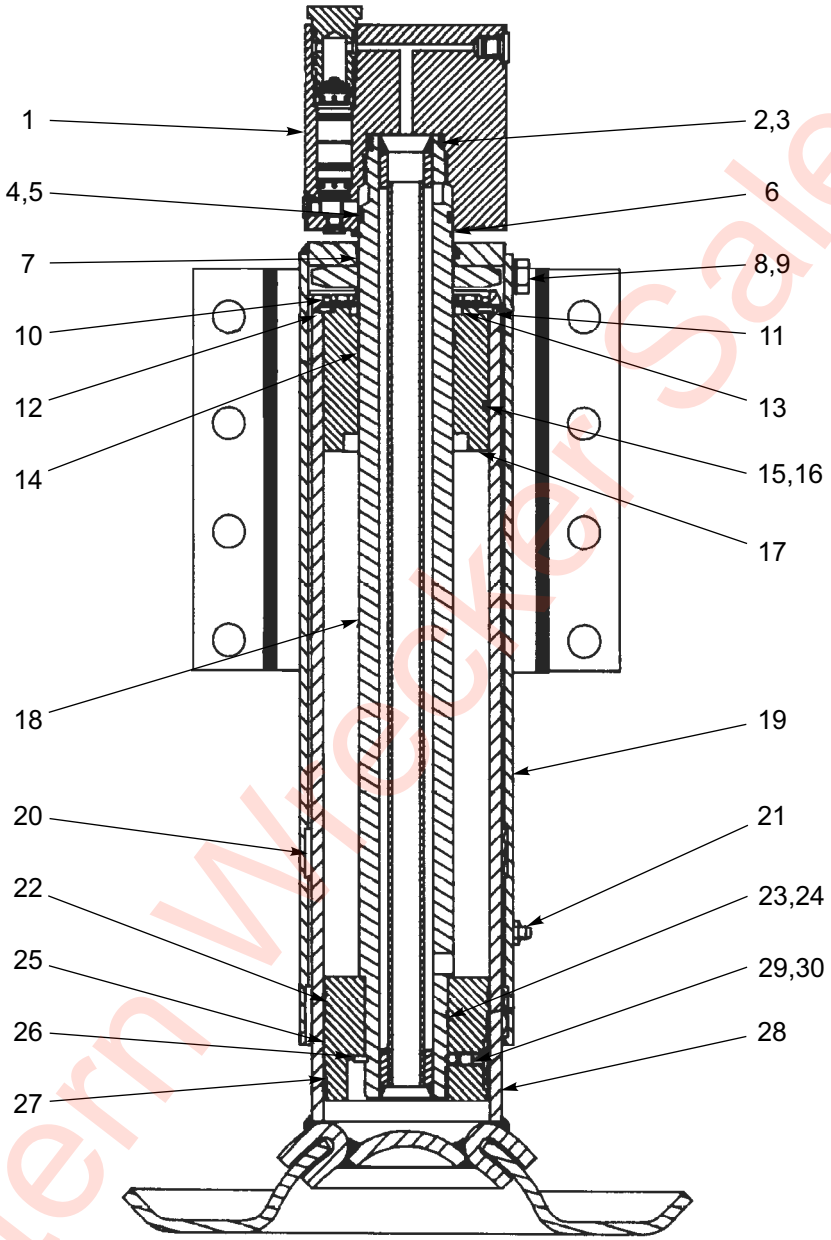

Figure 1-89: Dock Leveler Leg Assembly - W/ Lock Valve (1 of 2)

Eastern Wrecker Sales Inc

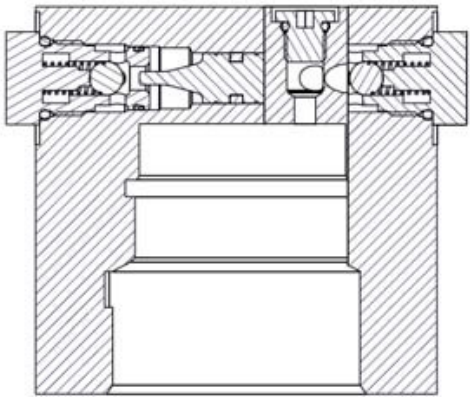

FRONT SECTION

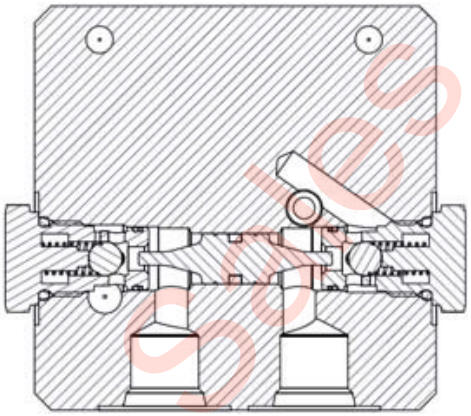

TOP SECTION

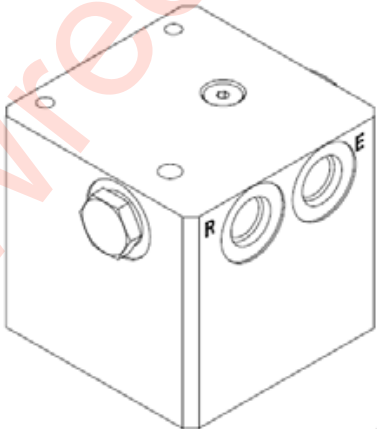

STABILIZER LEG
COUNTER BALANCE VALVE

Eastern Wrecker Sales Inc

Figure 1-90: Dock Leveler Leg Assembly - W/ Lock Valve (2 of 2)

Dock Leveler Leg Assembly - W/ Lock Valve

ITEM	PART NO.	DESCRIPTION	QTY.
	3-242-010205	COMPLETE LEG ASSEMBLY **(60,000# CAP. 4.00" BORE)**	- -
1	165769	VALVE SERVICE KIT	1
1	165768	VALVE RETROFIT KIT	1
2	-----	O-RING **(NOT SOLD SEPARATE)**	1
3	-----	BACK-UP WASHER **(NOT SOLD SEPARATE)**	2
4	-----	O-RING **(NOT SOLD SEPARATE)**	1
5	-----	BACK-UP WASHER **(NOT SOLD SEPARATE)**	1
6	-----	SNAP RING 2" ROD **(NOT SOLD SEPARATE)**	1
7	-----	O-RING **(NOT SOLD SEPARATE)**	1
8	-----	SCREW, HEX HEAD CAP **(NOT SOLD SEPARATE)**	1
9	-----	LOCK WASHER **(NOT SOLD SEPARATE)**	1
10	-----	SCREW, HEX HEAD CAP **(NOT SOLD SEPARATE)**	4
11	100279	CYLINDER HEAD RETAINER	1
12	-----	RETAINING RING **(NOT SOLD SEPARATE)**	1
13	-----	OIL SEAL **(NOT SOLD SEPARATE)**	1
14	-----	ROD SEAL **(NOT SOLD SEPARATE)**	1
15	-----	O-RING **(NOT SOLD SEPARATE)**	1
16	-----	BACK-UP WASHER **(NOT SOLD SEPARATE)**	1
17	100276	CYLINDER HEAD	1
18	-----	PISTON ROD **(NOT SOLD SEPARATE)**	1
19	-----	WELL TUBE **(NOT SOLD SEPARATE)**	1
20	-----	WEAR RING **(NOT SOLD SEPARATE)**	2
21	-----	GREASE FITTING	1
22	-----	PISTON SEAL **(NOT SOLD SEPARATE)**	1
23	-----	O-RING **(NOT SOLD SEPARATE)**	1
24	-----	BACK-UP WASHER **(NOT SOLD SEPARATE)**	2
25	-----	WEAR RING **(NOT SOLD SEPARATE)**	1
26	-----	SNAP RING	1
27	-----	PISTON **(NOT SOLD SEPARATE)**	1
28	-----	CYLINDER TUBE **(NOT SOLD SEPARATE)**	1
29	-----	NYLON BALL **(NOT SOLD SEPARATE)**	1
30	-----	SET SCREW **(NOT SOLD SEPARATE)**	1
31	100348	SPLIT COLLAR ASSEMBLY **(60,000 LB.) (NOT SHOWN, NOT SERVICEABLE)**	1

Eastern Wrecker Sales Inc

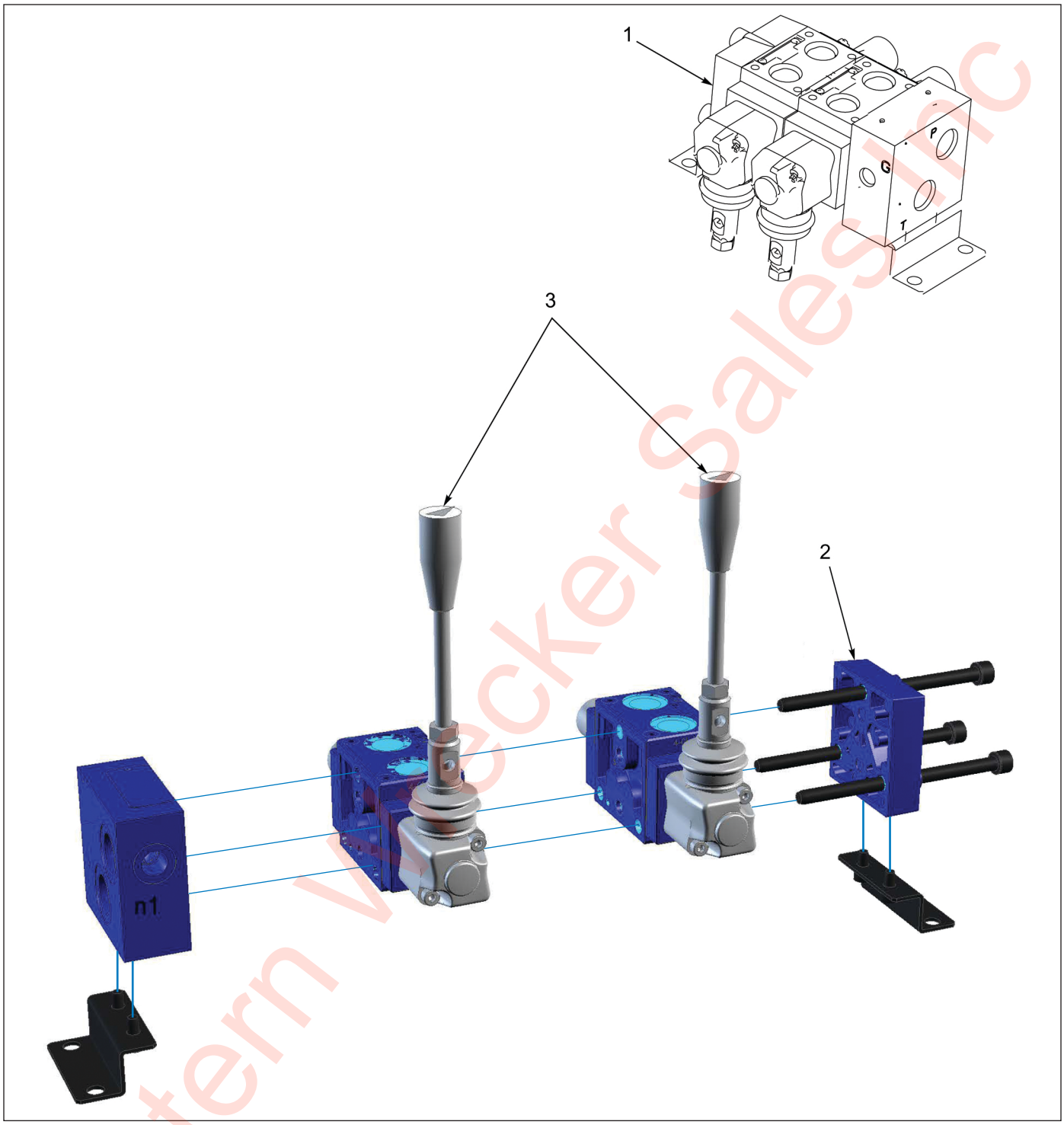

Figure 1-91: Dock Leveler Valve

Dock Leveler Valve

ITEM	PART NO.	DESCRIPTION	QTY.
1	189260	DOUBLE SPOOL STACK VALVE-PARALLEL,	1
2	193448	SPOOL POSITIONER SPRING CENTER	1
3	-----	HANDLE	1
4	193342	SEAL KIT **(NOT SHOWN)**	1

Eastern Wrecker Sales Inc

Bulkheads - Options

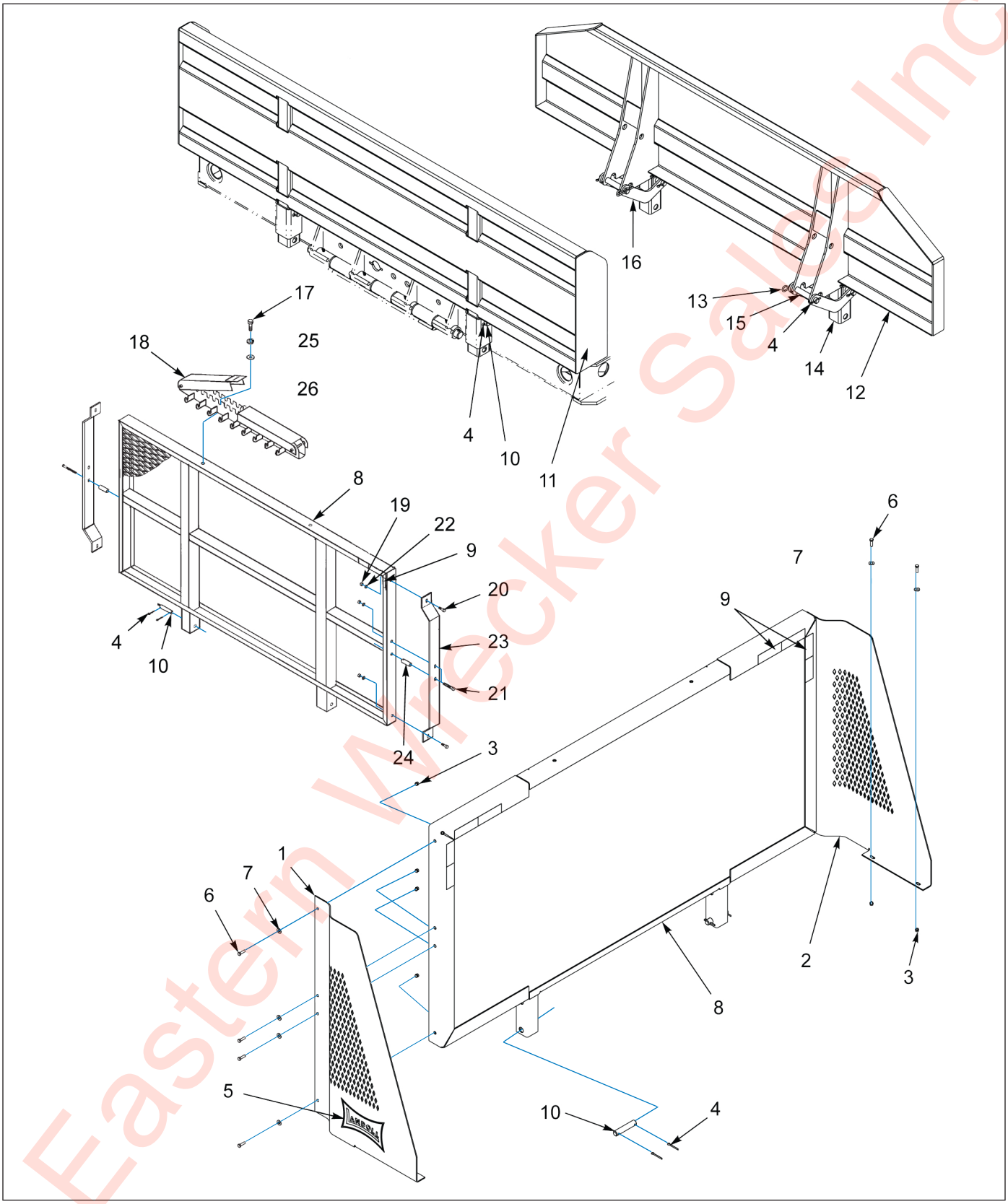

Figure 1-92: Bulkhead Assembly

Eastern Wrecker Sales Inc

Bulkhead Assembly

ITEM	PART NO.	DESCRIPTION	QTY.	
	128414	BULKHEAD INSTALLATION, 400 **(ITEMS 1-10)**	- -	
	134616	BULKHEAD INSTALLATION 26 X 102 **(ITEMS 4, 9-11)**	- -	
	136848	EXTENSION INSTALLATION 16/24 **(ITEMS 4 & 12-16)**	- -	
	B7-141-003	BULKHEAD CHAIN RACK INSTALLATION **(ITEMS 6-7 &17-18)**	- -	
	3-141-010121-1	BULKHEAD INSTALLATION **(ITEMS 4, 8-10 & 19-24)**	- -	
	130895	BULKHEAD INSTALLATION, SPECIAL **(ITEMS 1-10)**	- -	
	216921	ACCESSORY RACK INSTALLATION 48 X 51-1/2		- -
1	128137	EXTENSION, BULKHEAD ALUM LH	1	--
1	128153	EXTENSION, BULKHEAD LH	1	--
2	128138	EXTENSION, BULKHEAD ALUM RH	1	--
2	128152	EXTENSION, BULKHEAD RH	1	--
3	1-512-010005-05	NUT, HEX LOCK 3/8-16	12	--
4	1-557-010362-63	COTTER PIN 1/4 X 2	4	4
5	153754	DECAL, BOW TIE BLACK **(SEE PAGE 1-4)**	2	--
5	153755	DECAL, BOW TIE WHITE **(SEE PAGE 1-4)**	2	--
6	1-654-010051-06	SCREW, HEX HEAD CAP 3/8-16 X 1-1/4 GR5	12	--
7	1-861-010032-11	WASHER, FLAT 3/8	12	--
8	3-141-010155	BULKHEAD WELDMENT 48 X 96	1	--
8	130896	BULKHEAD WELDMENT, SPECIAL **(USED W/ 130895)**	1	--
9	3-573-010378	DECAL, 2” REFLEXITE TAPE, WHITE **(BY THE INCH)**	- -	49
10	6-557-010163	PIN HITCH LEVEL LINK	2	3
11	134608	BULKHEAD WELDMENT 26 X 102	1	--
12	136849	BULKHEAD WELDMENT 16/24 X 102 2 POS	1	--
13	1-557-010014	PIN, HAIR 1/4	2	--
14	3-482-010249	MOUNT WELDMENT BULKHEAD	2	--
15	3-557-010380	PIN	6	--
16	3-755-010080	SUPPORT WELDMENT, BULKHEAD	2	--
17	1-861-010034-11	WASHER, SPLIT LOCK 3/8	2	--
18	3-141-010008	CHAIN HANGER, LOCKING CHANNEL ASSEMBLY	1	--
19	1-512-010005-09	NUT, HEX LOCK 1/2-13 GRB	6	--
20	1-654-010055-03	SCREW, HEX HEAD CAP 1/2-13 X 1-1/2 GR5	4	--
21	1-654-010055-13	SCREW, HEX HEAD CAP 1/2-13 X 4 GR5	2	--
22	1-861-010032-15	WASHER, FLAT 1/2W	6	--
23	3-054-010101	BAR, SIDE 48" BULKHEAD 102"	2	--
24	3-711-010025	SPACER, 48" BULKHEAD	2	--
25	216920	ACC. RACK WLDMT 48 X 51-1/2	--	1

Eastern Wecker Sales Inc

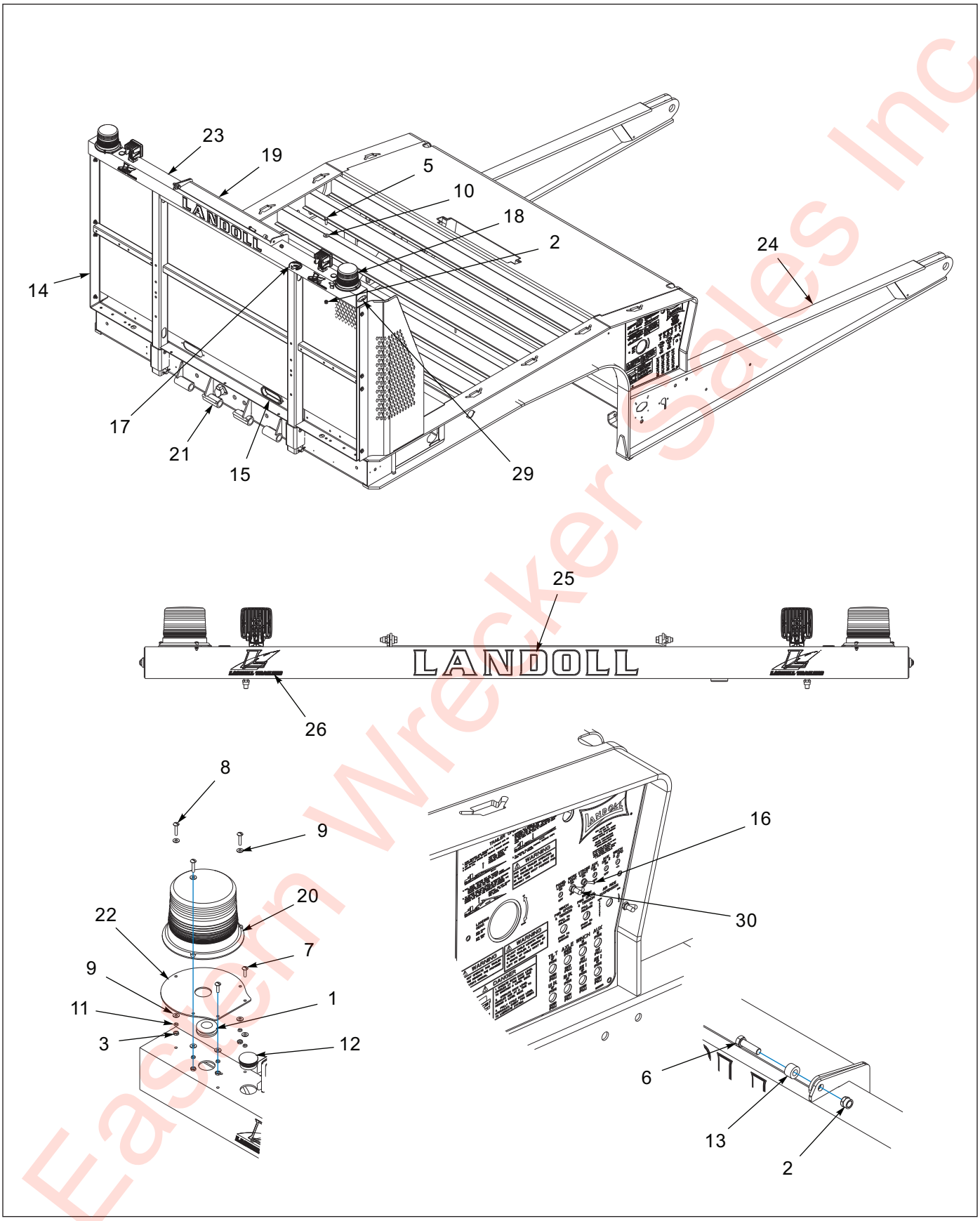

Figure 1-93: Bulkhead - Chain Rack Lights General Assembly

Eastern Wrecker Sales Inc

Bulkhead - Chain Rack Lights General Assembly

ITEM	PART NO.	DESCRIPTION	QTY.
	214407	BLKHD CHN RK S/T/T WL	- -
	214408	BLKHD CHN RK S/T/T WL HD	- -
	214409	BLKHD CHN RK S/T/T W/BCN	- -
	214410	BLKHD CHN RK S/T/T W/BCN HD	- -
	214411	BLKHD CHN RK S/T/T ONLY	- -
	214412	BLKHD CHN RK S/T/T W/BCN ELE	- -
	218129	BLKHD CHN RK S/T/T/BCN	
1	1-343-010006	GROMMET	2
2	1-512-010005-09	NUT,HEX,SLFLKG, 1/2-13 GRB	4
3	1-512-010007-03	NUT, HEX 10-24 GR2 ZP	10
4	1-578-010015-04	PLUG, PLASTIC PANEL 7/8 **(NOT SHOWN)**	- -
5	1-654-010055-03	SCREW,HEX CAP,1/2-13UNCX1-1/2	2
6	1-654-010055-04	SCREW,HEX CAP,1/2-13UNCX1-3/4	2
7	1-656-010003051	SCREW,RH HD MACH 10-24X3/4	4
8	1-656-010003053	SCREW RD HD MACH 10-24X1	6
9	1-861-010032-03	WASHER, FLAT #10 ZP/CD	16
10	1-861-010032-15	WASHER, FLAT 1/2 W ZP/CD	2
11	1-861-010034-07	WASHER,LKG,HLCL SPR, NO 10	10
12	116324	PLUG,PLAST PANEL1-5/16&1-7/16	2
13	125799	SPACER, 1 OD X 1/2 ID X .632	2
14	-----	BULKHEAD INSTL 400	- -
15	143114	GROMMET OVAL GROTE	1
16	150117	SWITCH ASSY LIGHT GROTE	- -
17	153102	GROMMET MOUNT 2-5/16" GROTE	1
18	163996	LIGHT,12V SQUARE LED FLOOD	- -
19	167975	LID WLDMT CHAIN BINDER	1
20	184501	STROBE LIGHT DEUTSCH CONN	2
21	186901	GOOSENECK WLDMT, US 400	- -
22	191545	PLATE BEACON MOUNTING	2
23	191811	TUBE WLDMT BHD TOPPER 3/4DIA	1
24	191872	GOOSENECK WLDMT 400A HD	- -
25	193456	DECAL LANDOLL 28-5/16 X 3-7/32	1
26	196165	DECAL HIGHWAY L	2
27	213295	LIGHT CLEAR LENS S/T/T **(NOT SHOWN)**	6
28	213296	FLANGE CHROME FLAT OBLONG **(NOT SHOWN)**	6
29	213297	LIGHT YEL CLEAR LENS MKR	2
30	81264	RUBBER BOOT FOR ELECT SWITCH	2

Eastern Wrecker Sales Inc

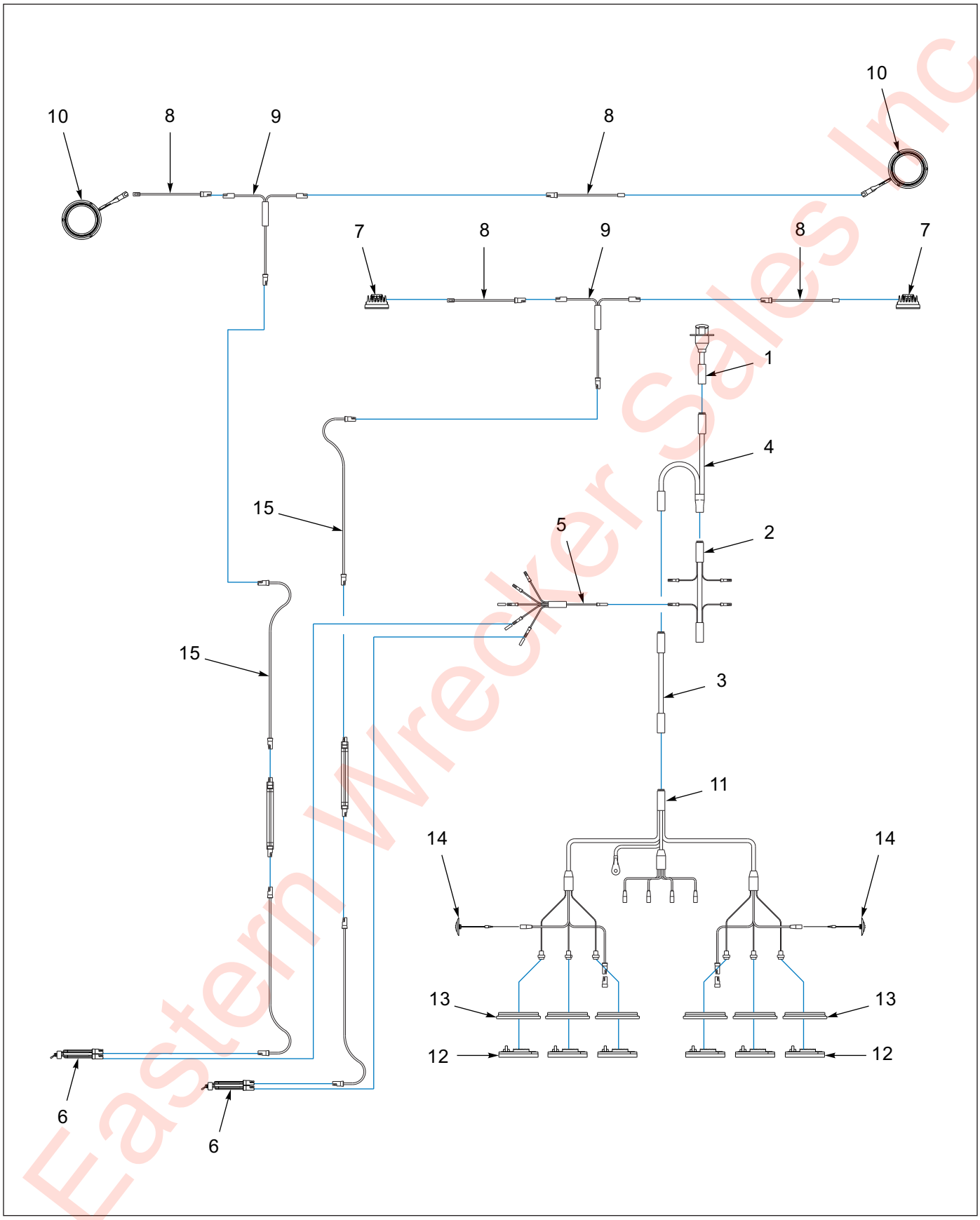

Figure 1-94: Bulkhead - Chain Rack Lights Electrical System

Eastern Wrecker Sales Inc

Bulkhead - Chain Rack Lights Electrical System

ITEM	PART NO.	DESCRIPTION	QTY.	
	214408	BULKHEAD CHAIN RACK S/T/T WL **(REF. ONLY)**	- -	
	214409	BULKHEAD CHAINRACK S/T/T WL BC **(REF. ONLY)**		- -
1	143100	HARNESS 7WAY RECP GROTE	- -	- -
2	143101	HARNESS FRONT MAIN GROTE	- -	- -
3	143167	HARNESS EXT 84 IN GROTE	1	1
4	146929	HARNESS Y SPLITTER GROTE	1	1
5	150093	HARNESS 5 AUX BRANCHES GROTE	- -	- -
6	150117	SWITCH ASSY LIGHT GROTE	- -	- -
7	163996	LIGHT,12V SQUARE LED FLOOD	2	2
8	164052	HARNESS,60"BRANCH,WORK LIGHT	- -	- -
9	169853	HARNESS T PWR BRANCH	- -	- -
10	184501	STROBE LIGHT DEUTSCH CONN	- -	- -
11	187859	HARNESS BUMPER MICRONOVA GROTE	1	1
12	213295	LIGHT CLEAR LENS S/T/T	6	6
13	213296	FLANGE CHROME FLAT OBLONG	6	6
14	213297	LIGHT YEL CLEAR LENS MKR	2	2
15	3-368-010252	HARNESS ASSY BKHD LIGHT EXT	- -	- -
16	43029	HOSE WRAP AEROQUIP 1/4 **(NOT SHOWN)**	- -	- -

Eastern Wrecker Sales Inc

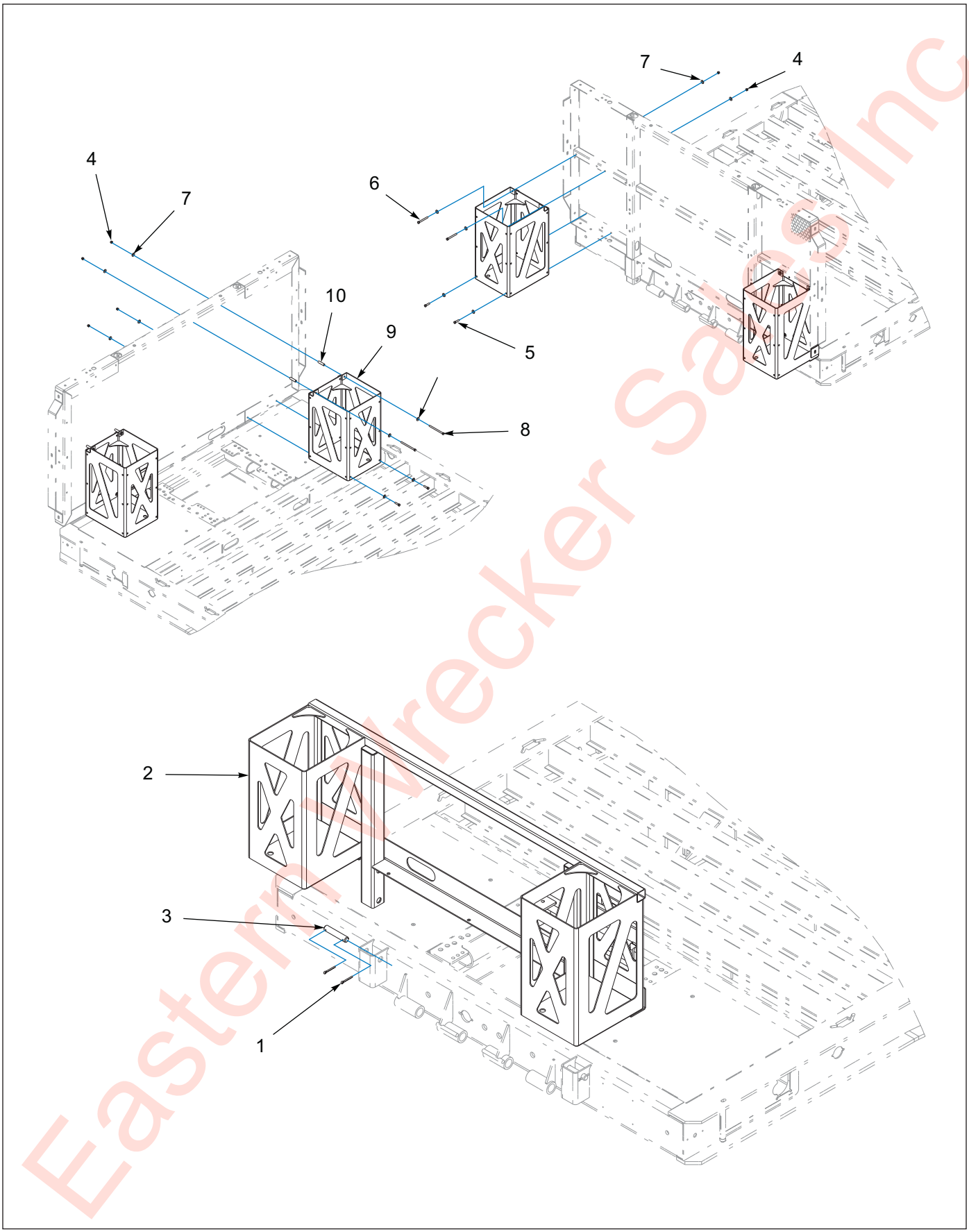

Figure 1-95: Bulkhead Installation - Special

Eastern Wrecker Sales Inc

Bulkhead Installation - Special

ITEM	PART NO.	DESCRIPTION	QTY.		
	204075	PROPANE TANK BRACKET BOLT-ON	- -		
	204095	PROPANE TANK BRACKET, FRONT MNT		- -	
	204096	PROPANE TANK BRACKET, REAR MNT			- -
1	1-557-010362-63	PIN COTTER, 1/4 X 2	4	--	--
2	204076	PROPANE TANK HOLDER WELDMENT	1	--	--
3	6-557-010163	PIN HITCH LEVELING LINK	2	--	--
4	1-512-010005-05	NUT, HEX, SLFLKG, 3/9-16 UNC, GRB	--	4	4
5	1-654-010051-07	SCREW, HEX, 3/8-16UNCX1-1/2, GR5	--	2	2
6	1-654-010051-15	SCREW, HEX, 3/8-16UNCX3-1/2, GR5	--	2	--
7	1-861-010032-11	WASHER, FLAT, ZP/CD, 3/8W	--	8	8
8	139603	SCREW, HEX CAP, 3/8-16 X 5-1/2 GR5	--	--	2
9	204089	PROPANE TANK HLDR WLDMT BLT-ON	--	1	1
10	204094	TUBE, ROUND, .5625 OD X .397 ID X 2.25	--	--	2

Eastern Wrecker Sales Inc

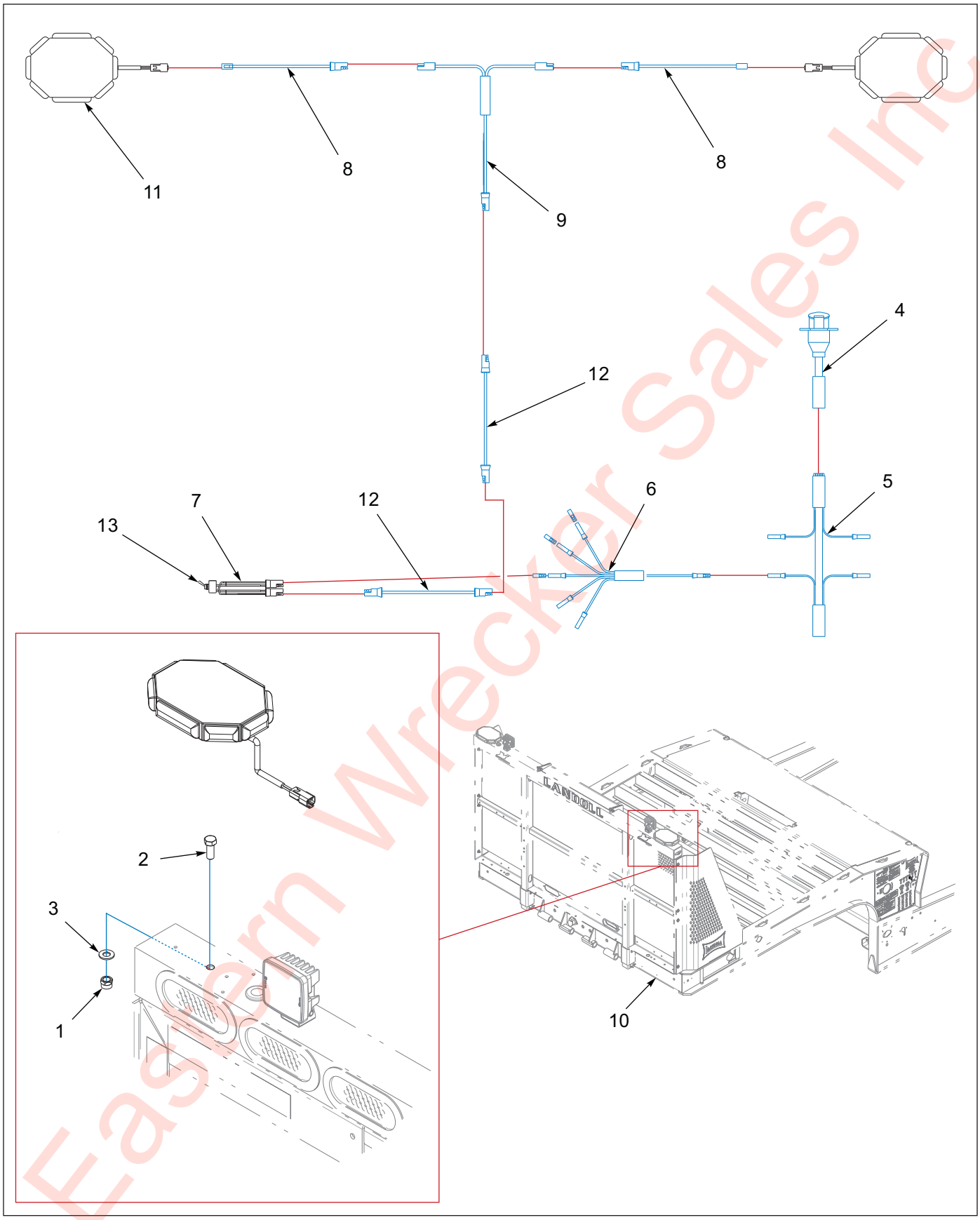

Eastern Wrecker Sales Inc

Figure 1-96: Towmate Strobe Installation

Towmate Strobe Installation

ITEM	PART NO.	DESCRIPTION	QTY.
	215522	BLKHD TWMT 360 STROBE INSTALLATION	- -
1	1-512-010005-09	NUT,HEX, SLFLKG, I/ 2-13 UNC,GRB	2
2	1-654-010055-02	SCREW. HEX, 1/2-1 3U CXI-I/4 GR5	2
3	1-861-010032-14	WASHER,FLAT,Z P/CD I /ZN	2
4	143100	HARNESS 7WAY RECP GROTE	- -
5	143101	HARNESS FRON T MA IN GROTE	- -
6	150093	HARNESS 5 AUX BRANCHES GROTE	- -
7	150117	TOGGLE SWITC SEALED S.P.S.T.	1
8	164052	HARNESS 60 IN. BRANCH WORK LIGHT	2
9	169853	HARNESS JUMPER T-POWER	1
10	3-141-010155	BULKHEAD WLDMT, 48X96, ENG PKG	- -
11	215521	TOWMATE MINI 60 LE D STROBE	2
12	3-368-010252	HARNESS ASSY BKHD LIGHT EXT	2
13	81264	RUBBER BOOT FOR ELECT SWITCH	1

Eastern Wrecker Sales Inc

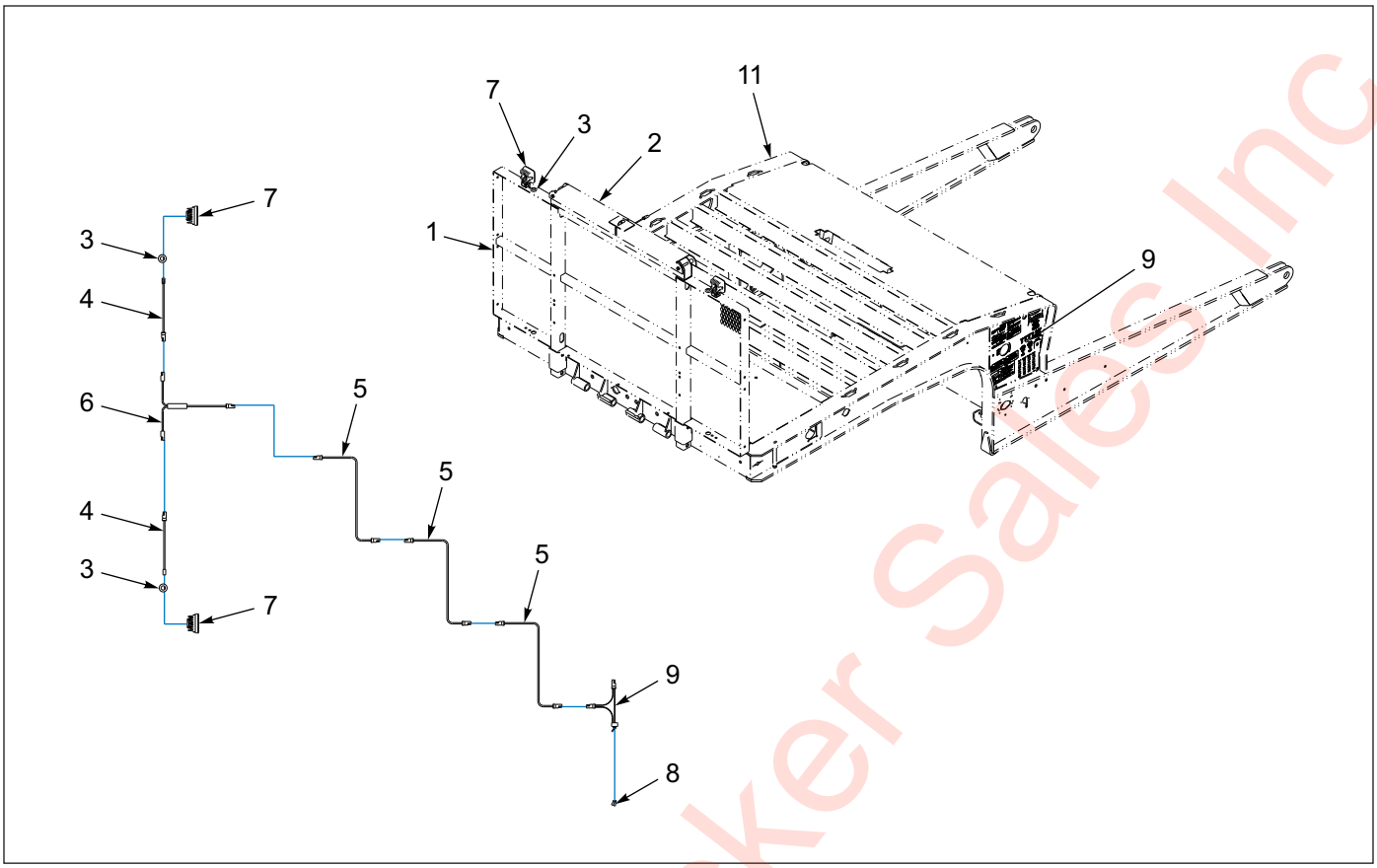

Figure 1-97: Bulkhead - Work Light Installation

Bulkhead - Work Light Installation

ITEM	PART NO.	DESCRIPTION	QTY.	
	191813	WORK LIGHT INSTL, BULKHEAD	- -	
	191814	WORK LIGHT HD INSTL, BULKHEAD		- -
1	3-141-010155	BULKHEAD WELDMENT	- -	- -
2	B7-141-003	CHAIN RACK INSTALLATION	- -	- -
3	1-343-010006	GROMMET	2	2
4	164052	HARNESS, 60” BRANCH WORK LIGHT	2	2
5	3-368-010252	HARNESS ASSEMBLY, BULKHEAD LIGHT EXTENSION	2	3
6	169853	HARNESS, JUMPER T-POWER	1	1
7	163996	LIGHT LED WHITE FLOOD LAMP	2	2
8	81264	RUBBER BOOT FOR ELECT SWITCH	1	1
9	150117	TOGGLE SWITCH SEALED SPST	1	1
10	1-822-010002	TRIM LOCK 3/16 **(NOT SHOWN)**	4	4
11	186901	WLDMT, GOOSENECK, US 400	- -	- -

Eastern Wrecker Sales Inc

Table provided for general use.

NOTES:

Eastern Wrecker Sales Inc

Bumpers - Options

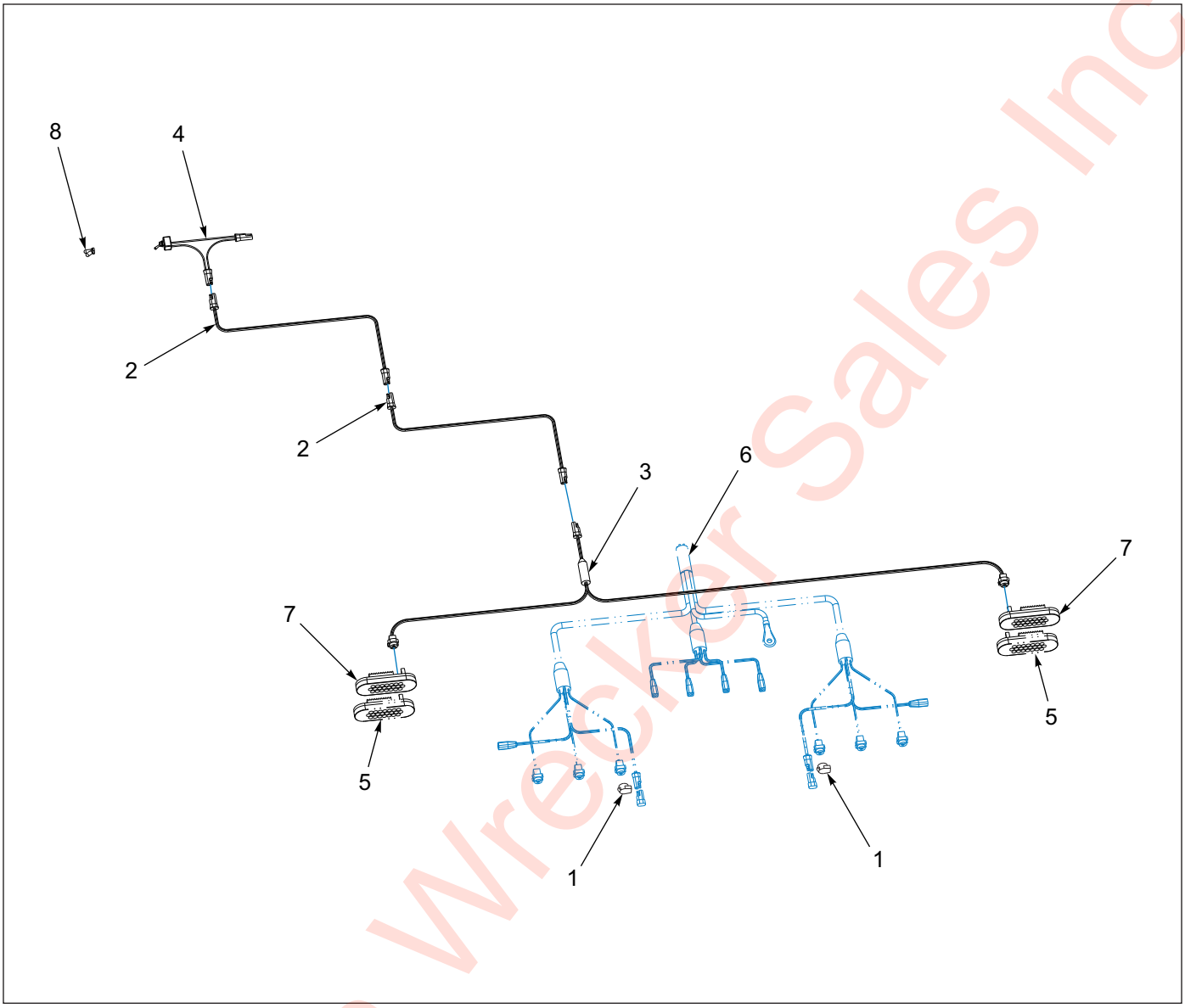

Figure 1-98: Bumper - Strobe Installation - Option

Bumper - Strobe Installation - Option

ITEM	PART NO.	DESCRIPTION	QTY.
	191834	STROBE INSTL BUMPER GROTE	- -
1	144608	DUMMY PLUG FOR FEMALE PLUG	2
2	150111	HARNESS 300 IN MALE.FEMALE	2
3	150114	HARNESS BUMPER STROBE GROTE	1
4	150117	SWITCH ASSY LIGHT GROTE	1
5	179902	LIGHT S/T/T RED CLEAR LENS GRT	2
6	187859	HARNESS BUMPER MICRONOVA GROTE	- -
7	187869	LIGHT STROBE YEL CLEAR LENS GR	2
8	81264	RUBBER BOOT FOR ELECT SWITCH	1
9	191835	STROBE INSTALLATION KIT **(NOT SHOWN)**	- -

Eastern Wrecker Sales Inc

Table provided for general use.

NOTES:

Eastern Wrecker Sales Inc

Electrical-Options

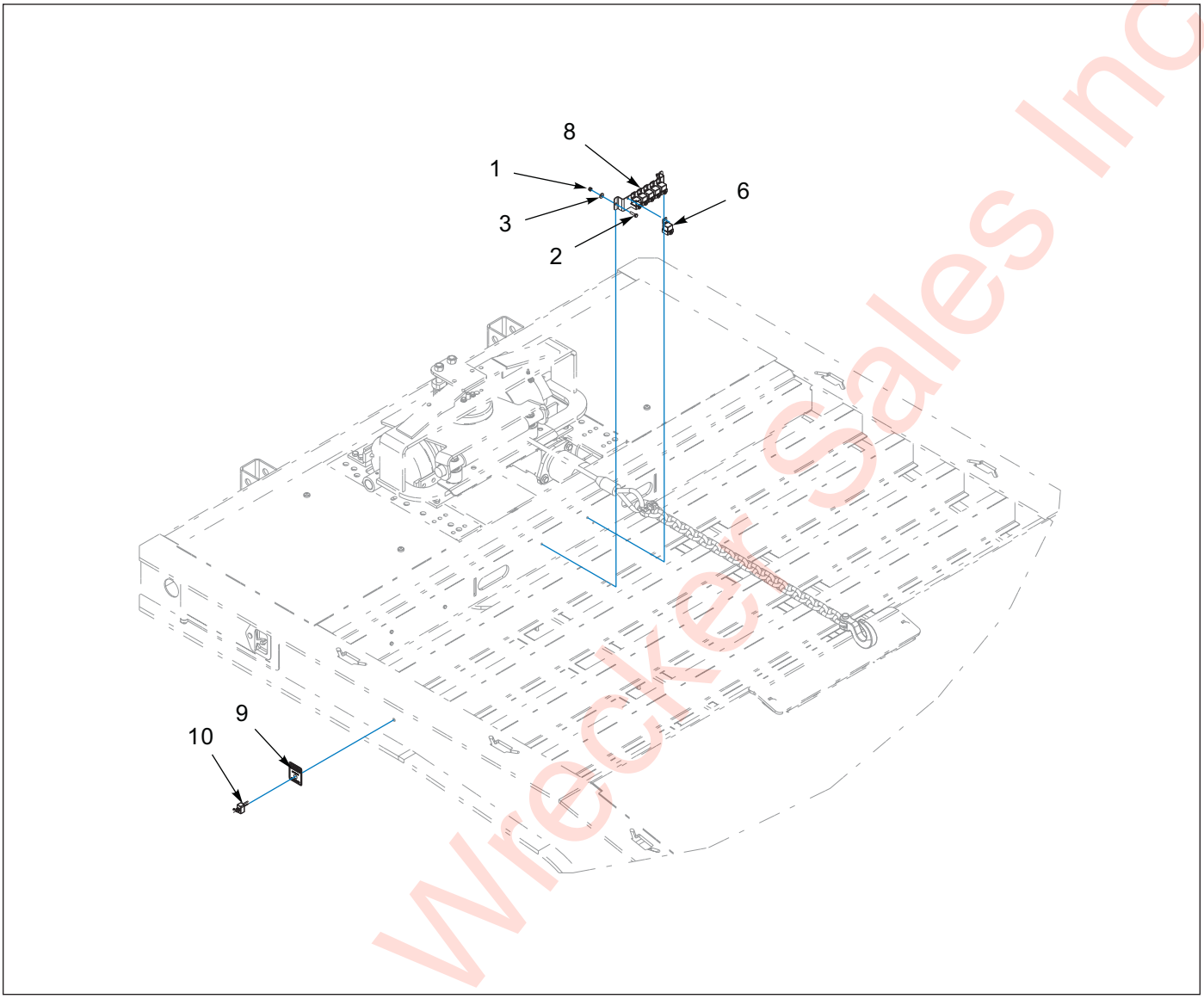

Figure 1-99: Disconnect Switch-174139

Disconnect Switch-174139

ITEM	PART NO.	DESCRIPTION	QTY.
	174139	ELECTRICAL DISCONNECT SWITCH INSTALLATION	--
1	1-512-010004-05	NUT, HEX LOCK 1/4-20 GRA	2
2	1-654-010047-06	SCREW, HEX HEAD CAP 1/4-20 X 1 GR5	2
3	1-861-010032-07	WASHER, FLAT 1/4	3
4	-----	FRAME ASSEMBLY, G/N	--
5	164053	HARNESS, BRANCH WORK LIGHT 102” (NOT SHOWN)	1
6	169534	RELAY, SEALED 20/40A	--
7	174140	HARNESS, TRAILER ELECT DISCONNECT SWITCH (NOT SHOWN)	1
8	174141	BRACKET, RELAY MOUNT	--
9	174142	DECAL, ELECTRICAL DISCONNECT SWITCH	1
10	3-272-010017	TOGGLE SWITCH, SEALED	--
11	-----	WINCH INSTALLATION 20K UPPER DECK	--

Eastern Wrecker Sales Inc

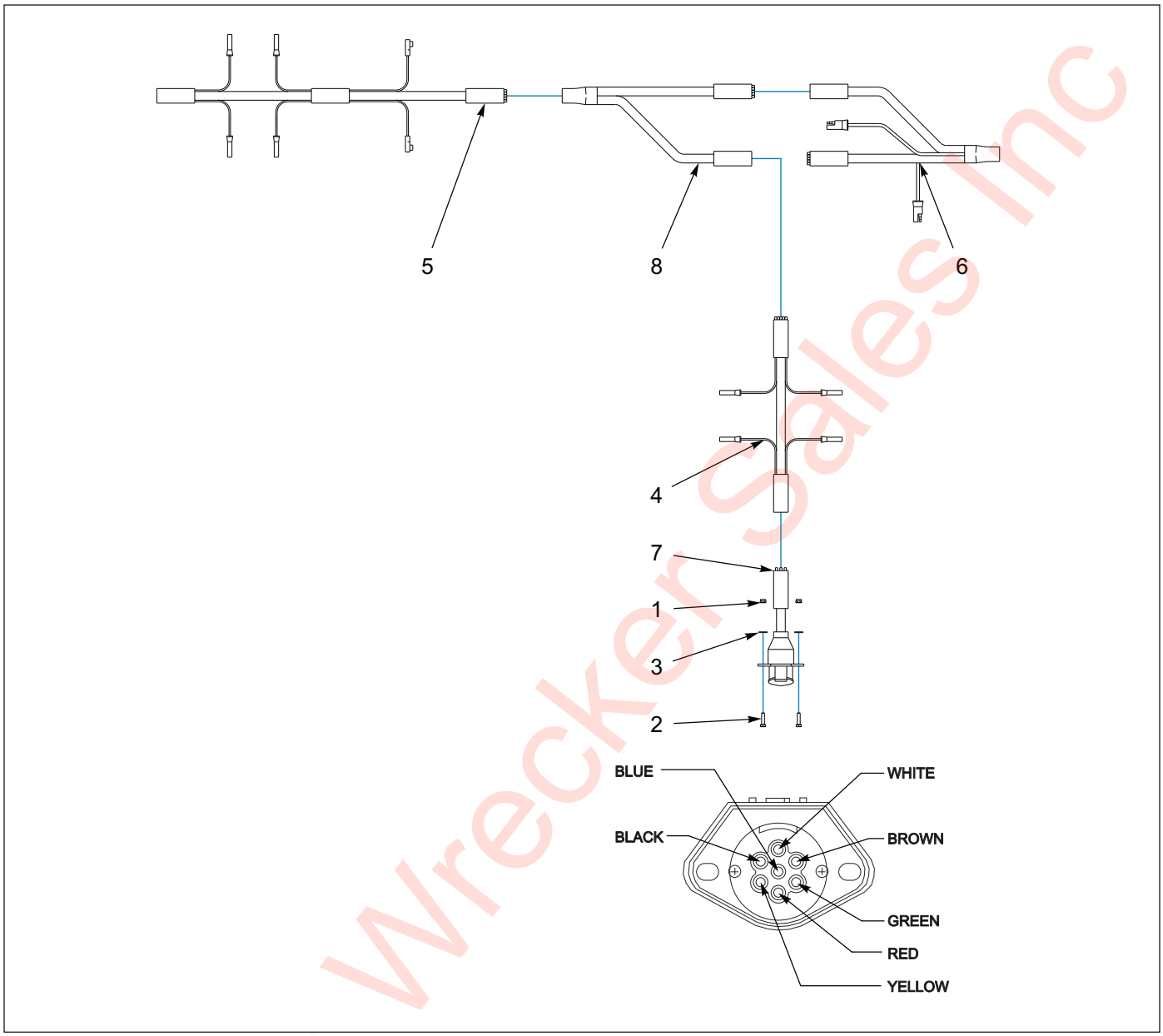

Figure 1-100: 7-Way Electrical Installation

7-Way Electrical Installation

ITEM	PART NO.	DESCRIPTION	QTY.
	148585	7-WAY ELECTRICAL INSTALLATION	- -
1	1-512-010005-01	NUT, HEX LOCK 1/4-20 GRB	2
2	1-654-010047-06	SCREW, HEX HEAD CAP 1/4-20 X 1 GR5	2
3	1-861-010032-07	WASHER, FLAT 1/4W	2
4	143101	HARNESS, FRONT MAIN	1
5	143102	HARNESS, BED MAIN	- -
6	143103	HARNESS, E-CHAIN	- -
7	146897	HARNESS, 7-WAY RECEPTACLE MAIN	1
8	146929	HARNESS, Y SPLITTER	1

Eastern Wrecker Sales Inc

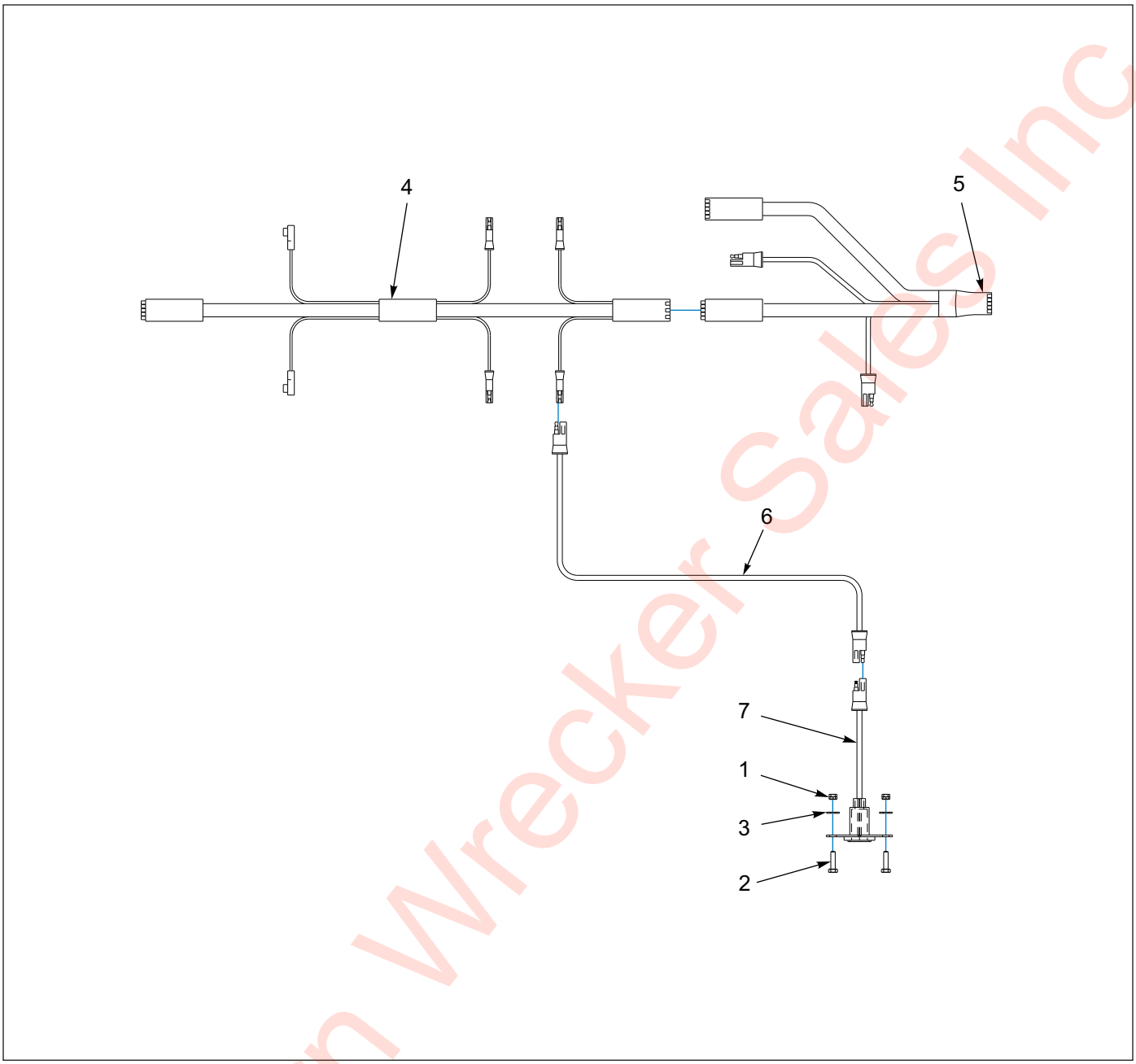

Figure 1-101: Rear Side Electrical Outlet Installation

Rear Side Electrical Outlet Installation

ITEM	PART NO.	DESCRIPTION	QTY.
	145538	ELECTRICAL OUTLET, REAR SIDE	- -
1	1-512-010005-01	NUT, HEX LOCK 1/4-20 GRB	2
2	1-654-010047-06	SCREW, HEX HEAD CAP 1/4-20 X 1 GR5	2
3	1-861-010032-07	WASHER, FLAT 1/4W	2
4	143102	HARNESS, BED MAIN GROTE	- -
5	143103	HARNESS, E-CHAIN GROTE	- -
6	150111	HARNESS 300”	1
7	150116	HARNESS/RECEPTACLE ASSEMBLY	1

Eastern Wrecker Sales Inc

Table provided for general use.

NOTES:

Eastern Wrecker Sales Inc

Engines - Options

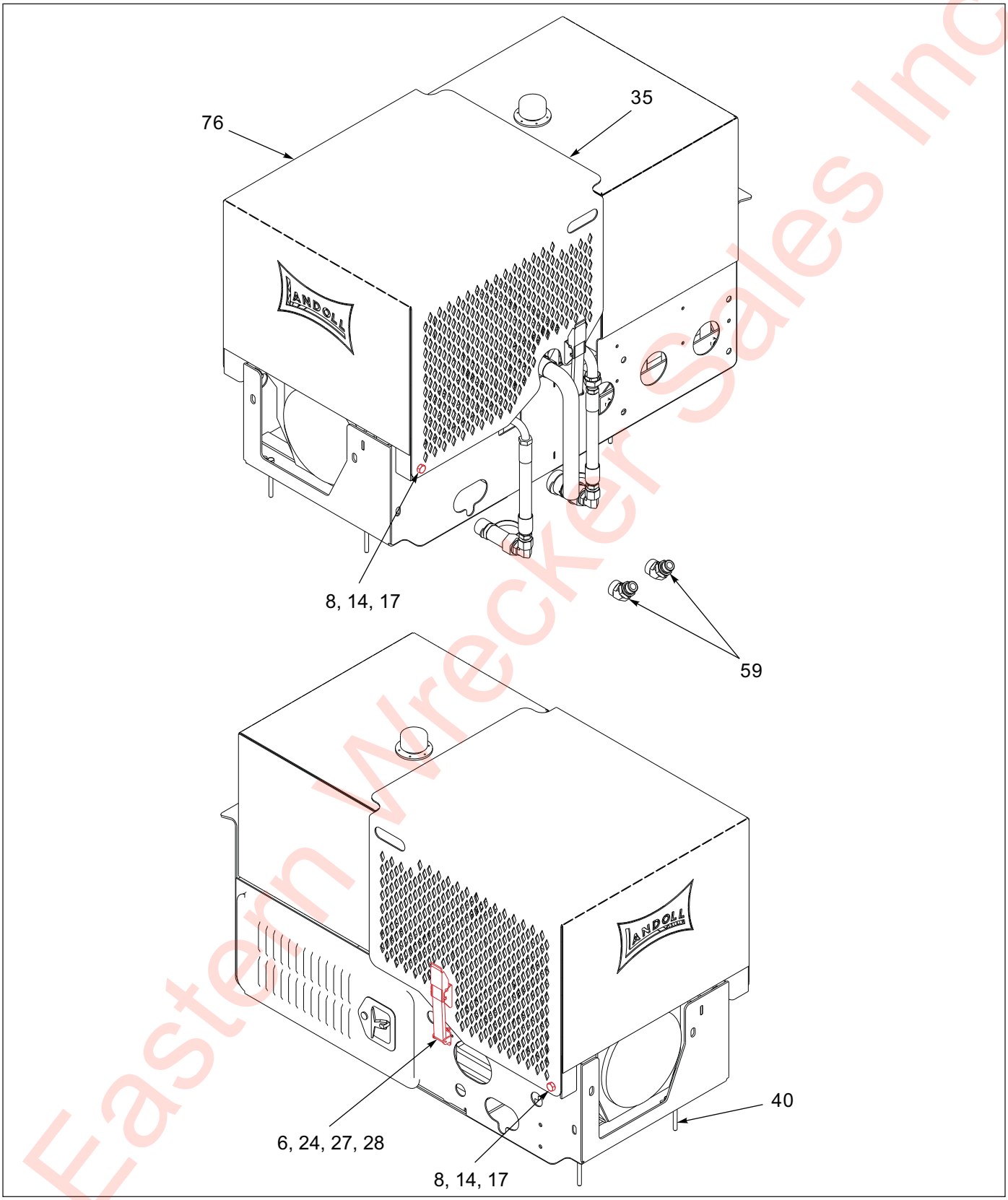

Figure 1-102: Engine - 25 HP Upper Deck Package (1 of 4)

Eastern Wrecker Sales Inc

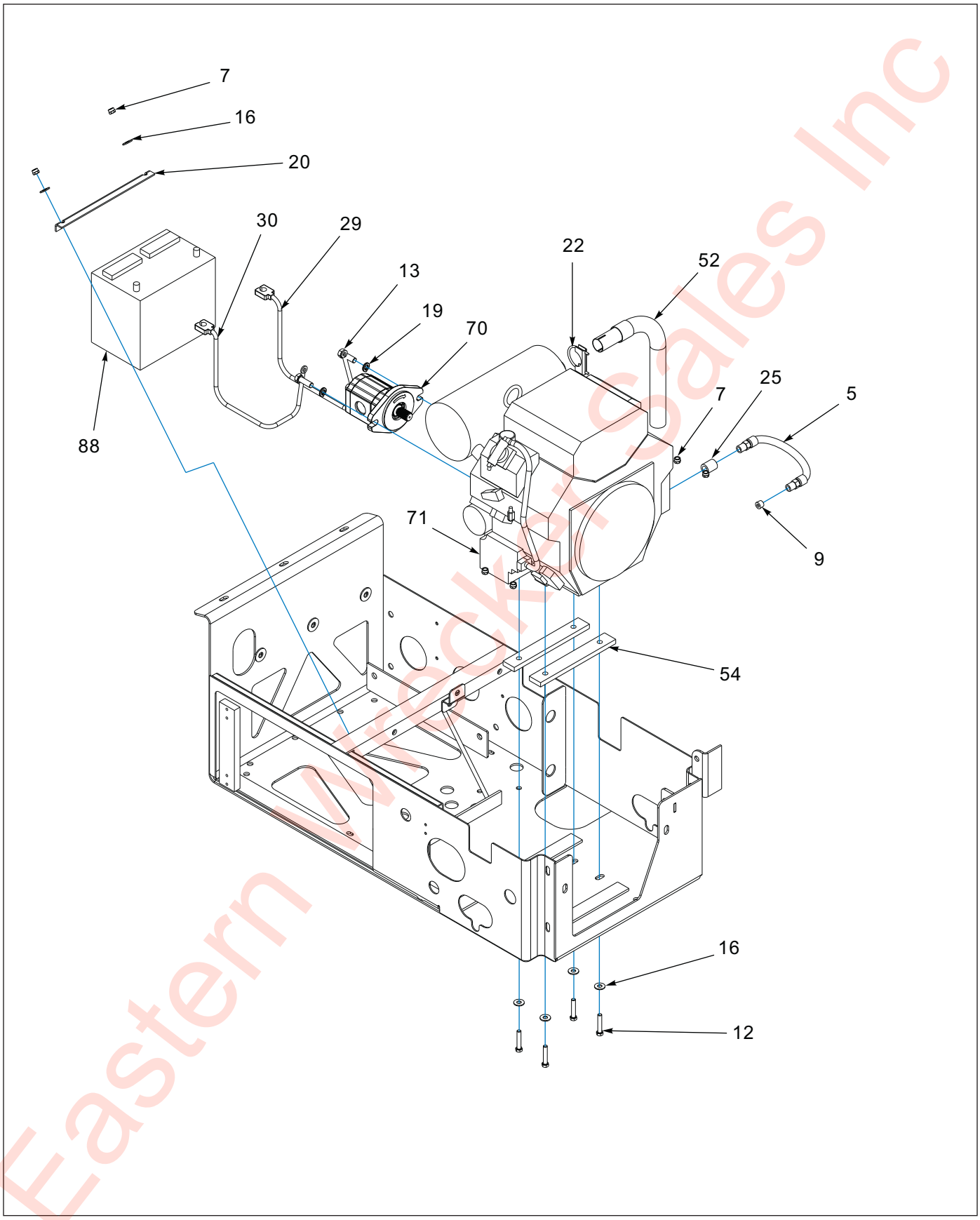

Figure 1-103: Engine - 25 HP Upper Deck Package (2 of 4)

Eastern Wrecker Sales Inc

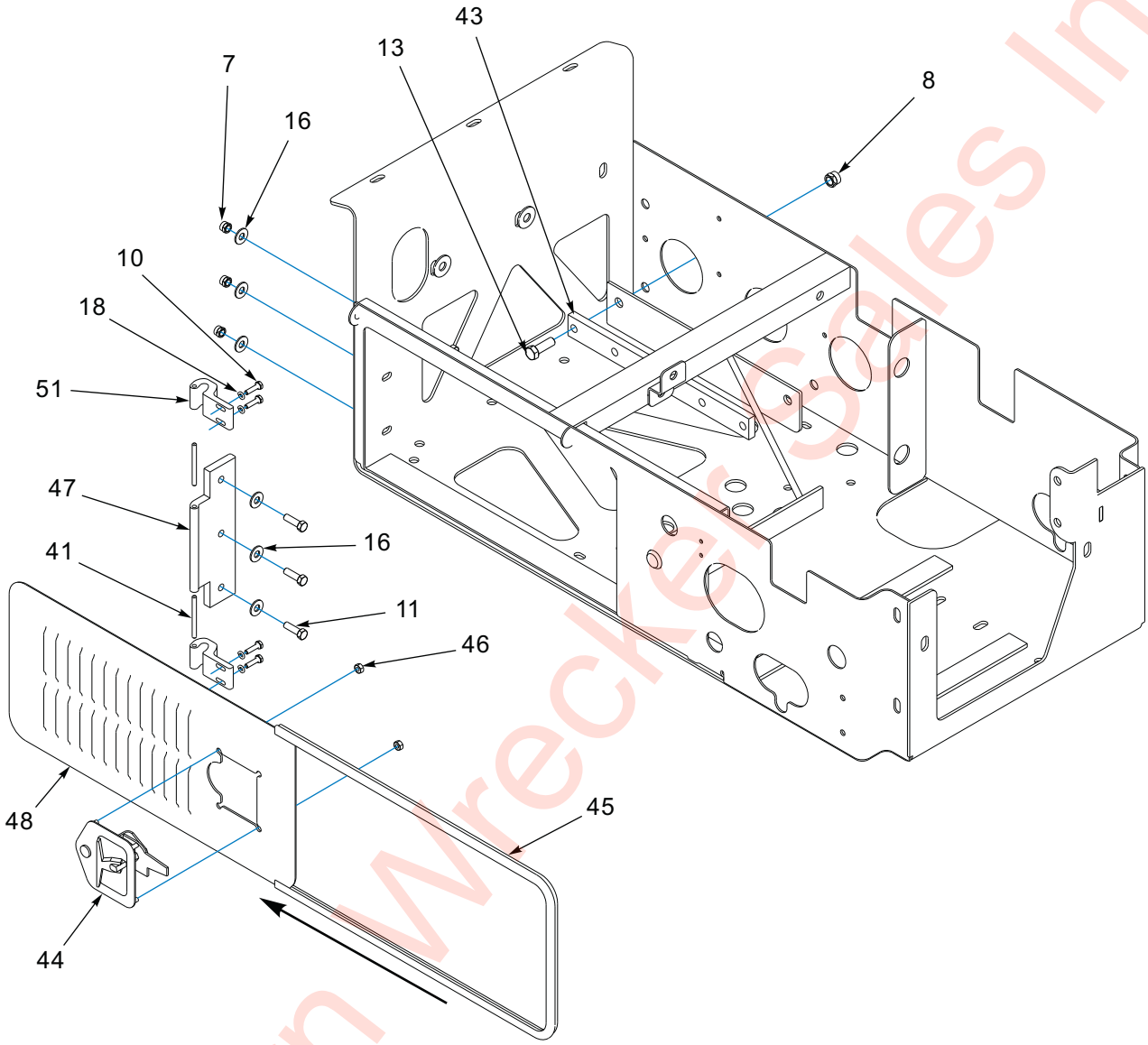

BASE - DOOR ASSEMBLY

Eastern Wrecker Sales Inc

Figure 1-104: Engine - 25 HP Upper Deck Package (3 of 4)

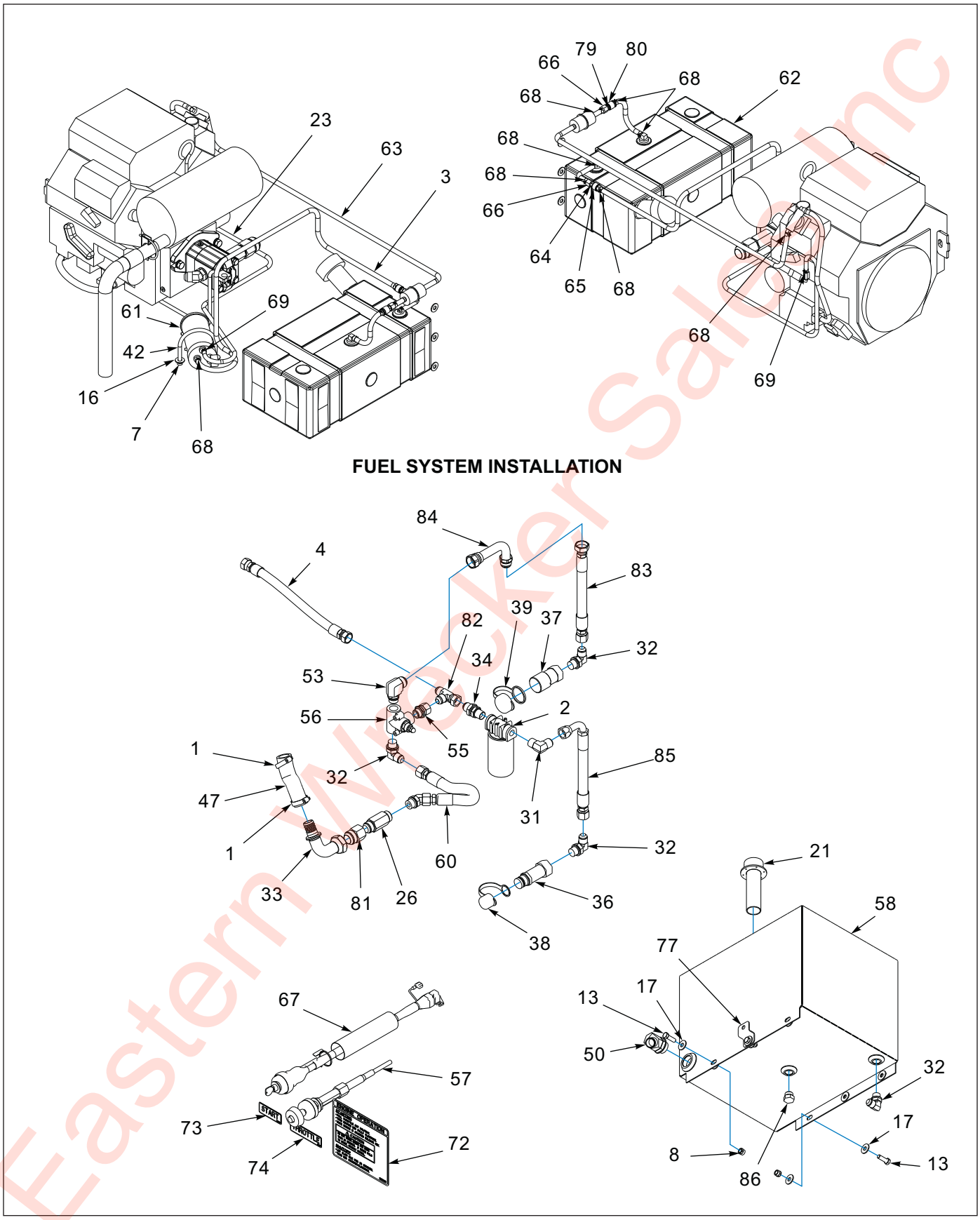

Figure 1-105: Engine - 25 HP Upper Deck Package (4 of 4)

Eastern Wrecker Sales Inc

Engine - 25 HP Upper Deck Package

ITEM	PART NO.	DESCRIPTION	QTY.
	189360	ENGINE PACKAGE, 25HP EFI, U/D	- -
	189360FI	FIELD INSTL ENG PKG, 25 HP EFI, U/D	- -
1	1-181-010046-7	CLAMP,HOSE 1-1/16 TO 2DIA #24	2
2	1-295-010001	FILTER, RETURN LINE	1
3	1-316-010013	HOSE,1/4 LOW PRESSURE FUEL	5
4	1-397-010304018	HOSE ASSY,3/4X18,SAE37,STR-ST	1
5	1-397-010312032	HOSE ASSY,3/8X32,3/8 MPT ENDS	1
6	1-512-010004-03	NUT,HEX,SLFLK 10-24UNC, GRA	8
7	1-512-010005-05	NUT, HEX, SLFLKG GRB 3/8-16	15
8	1-512-010005-09	NUT,HEX,SLFLKG, 1/2-13 GRB	10
9	1-560-010002-03	PLUG, PIPE, 3/8NPTF	1
10	1-654-010047-06	SCREW,HX CP 1/4-20UNCX1 GR5	4
11	1-654-010051-06	SCREW,HEX CAP 3/8-16UNCX1-1/4	3
12	1-654-010051-09	SCREW,HEX CAP,3/8-16UNCX2 GR5	6
13	1-654-010055-03	SCREW,HEX CAP,1/2-13UNCX1-1/2	10
14	1-654-010055-13	SCREW,HEX CAP,1/2-13UNCX4 GR5	2
15	1-822-010002	TRIM-LOK 3/16 **(NOT SHOWN)**	6
16	1-861-010032-11	WASHER, FLAT 3/8 W ZP/CD	22
17	1-861-010032-15	WASHER, FLAT 1/2 W ZP/CD	20
18	1-861-010034-09	WASHER, LKG HLCL SPR, 1/4	4
19	1-861-010034-13	WASHER, LKG HLCL SPR, 1/2	2
20	3-120-010124	BATTERY CLAMP BRKT	1
21	3-162-010001	FILLER BREATHER STRAINER ASSY	1
22	3-182-010028	CLAMP MUFFLER	1
23	3-316-010008	3/16 ID FUEL HOSE	3
24	3-443-010018	LATCH,FLEX DRAW,LEVER ASSIST	2
25	3/8P COUPL	3/8 BLK PIPE COUPLING	1
26	40-0667-02	ELBOW,45,,ST-37 12-12	1
27	110-0116	SCREW RD HD CAP 10-24X3/4	8
28	110-0253	WASHER,FLAT 3/16 STD	8
29	514-9045-30	CABLE ASSY BATTERY	1
30	514-9073-30	CABLE ASSY BATTERY	1
31	2024-12-12S	ADAPTER 90 3/4MPT X3/4M JIC	1
32	2062-12-12S	ADAPTER,90,#12 O-RINGX#12TUBE	5
33	2215-16-20S	ADAPTER-16JIC-20JIC STR	1
34	2240-12-12S	ADAPTER,BLKHD,3/4NPT-3/4TBE	1
35	10030	SEAL,BAR STOCK-NEOPRENE SPNG	2
36	105479	COUPLER FLAT FACE MALE NOSE	1
37	105480	COUPLER FLAT FACE FEMALE BODY	1
38	105481	COUPLER DUST CAP MALE	1
39	105482	COUPLER DUST CAP FEMALE	1
40	108295	SCREW,HX CP 3/8-16UNCX4 GR5	2
41	108601	PIN, DOOR HINGE	2
42	110578	U-BOLT, 3/8-16 x 3-1/8 x 4-1/8	1
43	113856	MOUNT,ENG ISOLATOR,KOHLERCH25	1
44	114814	LATCH FOLDING T LOCKABLE	1
45	114815	SEAL, SPONGE RUBBER TRIM	5
46	115877	NUT HVY HEX 1/4-20 GR5	4

Eastern Wrecker Sales Inc

Engine - 25 HP Upper Deck Package

ITEM	PART NO.	DESCRIPTION	QTY.
47	116326	HINGE,BASE MNT, COM ENG PKG	1
48	116328	MOUNT,DOOR WLDMT,COM ENG PKG	1
49	116330	FITTING 1.25F 37-1.25 BARB 90	1
50	117873	FITTING,1.63-12 SAE-1 25H/B45	1
51	119206	HINGE, DOOR ENG DRV, 25HP	2
52	119445	EXHAUST EXT WLDMT 25HP E/P	1
53	120384	ADAPTER,#16JICX#12ORB,90ELB **(ONLY BEFORE 11/2018)**	1
54	120659	ISOLATOR, KOHLER 25HP MOUNT	2
55	120660	ADAPTER #12-O/RFEM-12#FL M	1
56	120661	VALVE,HYD PRES,#12SAE,2500P	1
57	128774	CABLE, THROTTLE 40'	1
58	129264	HYD TANK WLDMT, 30G E/P	1
59	138209	ADAPTER HYD 45#12 MALE-FEMORB	2
60	143850	HOSE ASSY 3/4X35OAL #12F JIC	1
61	166766	CARBON CANISTER,FUEL TANK,GAS	1
62	169531	TANK,FUEL PLSTC,6 GAL,LOW PERM	1
63	169532	HOSE, FUEL,1/4 LOW PERM, CARB	5
64	170109	FITTING,1/4MPT TO MALE QD,FORC	1
65	170110	FITTING,5/16BARB TO FE QD,FORC	1
66	173860	FITTING,1/4 HOSE BARBX1/4 FNPT	2
67	178428	SWITCH/HARNESS ASSY KOHLER UD	1
68	178638	SPRING CLAMP, 1/2"OD FUEL HOSE	8
69	179090	SPRING CLAMP,7/16"OD FUEL HOSE	2
70	186811	PUMP HYDRAULIC GEAR 0.77CID	1
71	189308	ENGINE,KOHLER,25HP,EFI,PUMP	1
72	189309	DECAL,EFI ENG PKG INSTR	1
73	189310	DECAL, START, ENG PKG	1
74	189311	DECAL, THROTTLE, ENG PKG	1
75	189361	WLDMT,ENG PKG MT, 25HP EFI **(NOT SHOWN)**	1
76	189364	WLDMT,HOOD,ENG PKG,25HP EFI	1
77	189369	PLATE,FUEL HOSE CLAMP	1
78	193904	HOSE, 1-1/4 X 7-1/2, SUCTION	1
79	170111	FITTING,1/4MPT TO MALE QD,SUZU **(BEFORE 10-1-16)**	1
79	202225	FITTING 1/4 MNPT/MALE QD **(AFTER 10-1-16)**	1
80	170112	FITTING,5/16BARB TO FE QD,SUZU **(BEFORE 10-1-16)**	1
80	202226	FITTING5/16 HOSEBARB/FEMALE QD **(AFTER 10-1-16)**	1
81	202713-16-16S	ADAPTER-160-RING-16JIC STR	1
82	203102-12-12S	ADAPTER,TEE, #12, SAE37 SWIVL	1
83	1-397-010304060	HOSE ASSY 3/4 X 60, SAE37, STR-STB	1
84	205710	ADAPTER, 37-37 JIC, 90, 16S **(ONLY BEFORE 11/2018)**	1
85	205712	HOSE ASSY 3/4 X 60,#12 SAE 37	1
86	900598-12S	PLUG, O-RING BOSS #12	1
87	1410792	OIL, ENGINE 10W-30	0.5
88	2481X	BATTERY 12 VOLT **(USED W/ 189360)**	1
89	2481X DRY	BATTERY,248IX, NO ACID **(USED W/ 189360FI)**	1
90	199105	FUEL FILTER KOHLER, 25-050-42-S **(NOT SHOWN)**	1
91	210377	FUEL PUMP KOHLER **(NOT SHOWN)**	1
92	10109	DECAL, HYDRAULIC FLUID ONLY **(NOT SHOWN)**	- -
93	218046	DECAL, GASOLINE ONLY **(NOT SHOWN)**	- -

Eastern Wholesale Sales Inc

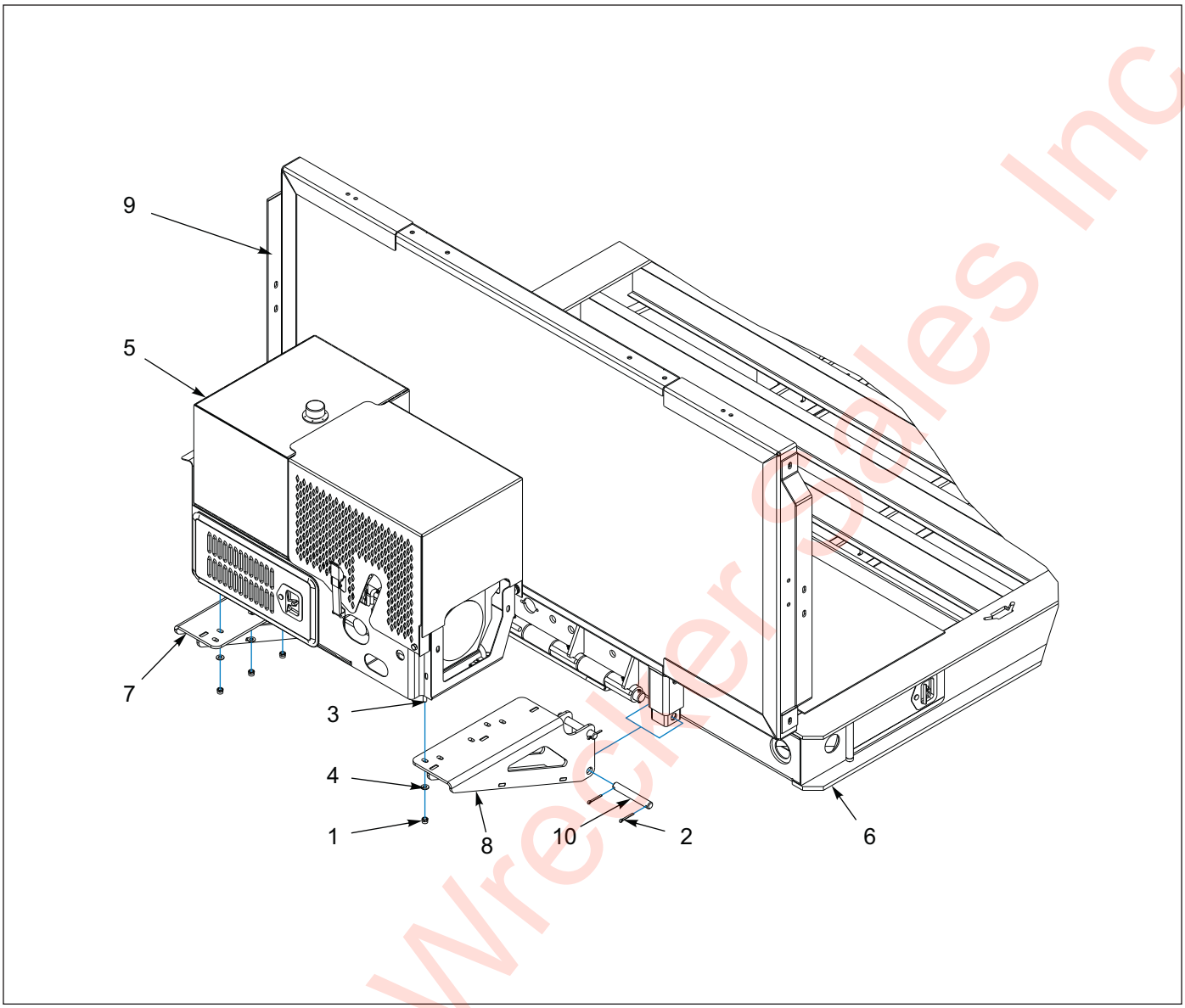

Figure 1-106: Engine - Front Mount Extension Package Installation

Engine - Front Mount Extension Package Installation

ITEM	PART NO.	DESCRIPTION	QTY.
	147471	FRONT EXTENSION ENGINE PKG MOUNT INSTALLATION	- -
1	1-512-010005-09	NUT, HEX LOCK 1/2-13 GRB	5
2	1-557-010362-63	PIN, COTTER 1/4 X 2	8
3	1-654-010055-03	SCREW, HEX HEAD CAP 1/2-13 X 1-1/2 GR5	5
4	1-861-010032-14	WASHER, FLAT 1/2N	10
5	-----	ENGINE PKG 25 HP	- -
6	-----	FRAME ASSEMBLY, G/N	- -
7	147468	BRACKET WELDMENT, RH ENG MOUNT	1
8	147469	BRACKET WELDMENT, LH ENG MOUNT	1
9	3-141-010121-2	BULKHEAD INSTALLATION **(SEE PAGE 1-168)**	- -
10	3-557-010380	PIN, 1 X 6-7/8	4

Eastern Wrecker Sales Inc

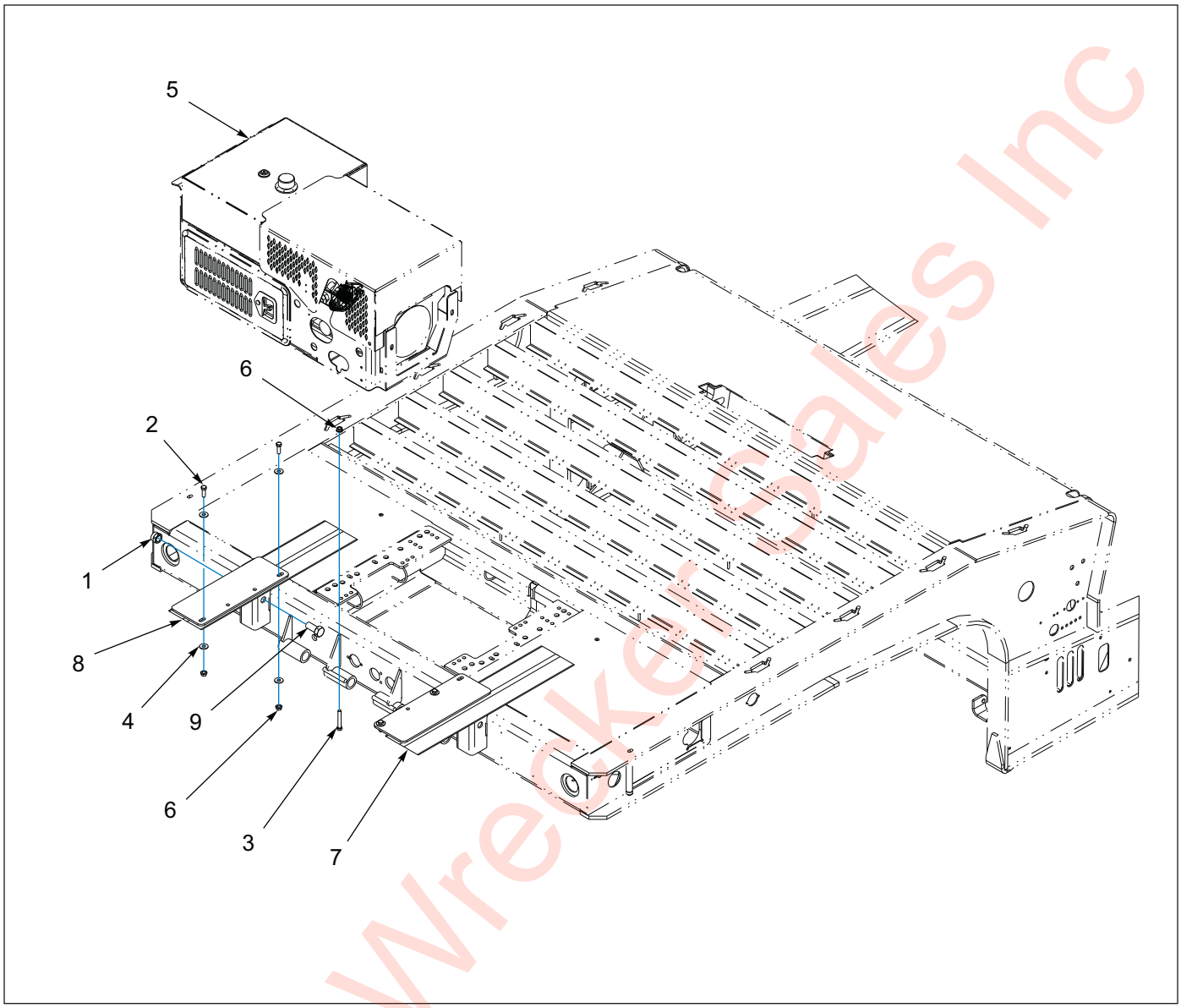

Figure 1-107: Engine - Front Mount Installation

Engine - Front Mount Installation

ITEM	PART NO.	DESCRIPTION	QTY.
	136580	FRONT MOUNT ENGINE INSTALLATION	- -
1	1-512-010005-19	NUT, HEX LOCK 1-8 GRB	2
2	1-654-010055-03	SCREW, HEX HEAD CAP 1/2-13 X 1-1/2 GR5	4
3	1-654-010055-10	SCREW, HEX HEAD CAP 1/2-13 X 3-1/4 GR5	2
4	1-861-010032-15	WASHER, FLAT 1/2W	8
5	-----	ENGINE PACKAGE 25 HP	- -
6	124971	NUT, FLANGE HEAD SPIRALOCK 1/2-13	6
7	136581	MOUNT WELDMENT LH FRONT ENGINE PACKAGE	1
8	136582	MOUNT WELDMENT RH FRONT ENGINE PACKAGE	1
9	137943	SCREW, HEX HEAD CAP 1-8 X 2-1/4 GR5	2

Eastern Wrecker Sales Inc

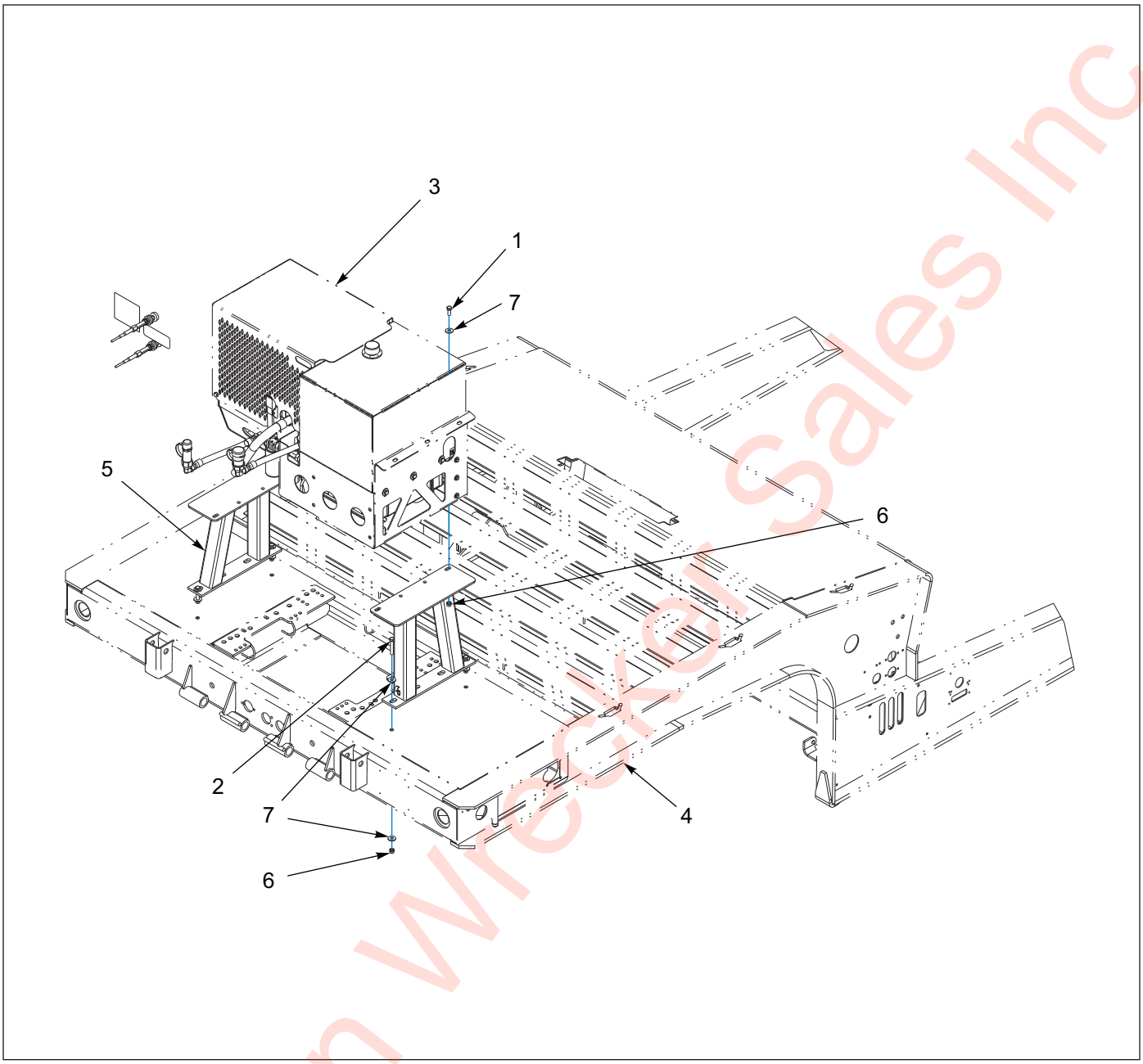

Figure 1-108: Engine - Upper Deck Stand Installation

Engine - Upper Deck Stand Installation

ITEM	PART NO.	DESCRIPTION	QTY.
	136578	UPPER DECK STAND INSTALLATION	- -
1	1-654-010055-02	SCREW, HEX HEAD CAP 1/2-13 X 1-1/4 GR5	4
2	1-654-010055-09	SCREW, HEX HEAD CAP 1/2-13 X 3 GR5	4
3	-----	ENGINE PACKAGE, 25 HP GAS	- -
4	-----	UPPER DECK FRAME WELDMENT	- -
5	134857	MOUNT WELDMENT, ENGINE PACKAGE	2
6	1-512-010005-09	NUT, HEX LOCK 1/2-13 GRB	8
7	1-861-010032-15	WASHER, FLAT 1/2W	16

Eastern Wrecker Sales Inc

Table provided for general use.

NOTES:

Eastern Wrecker Sales Inc

Hydraulic Kits - Options

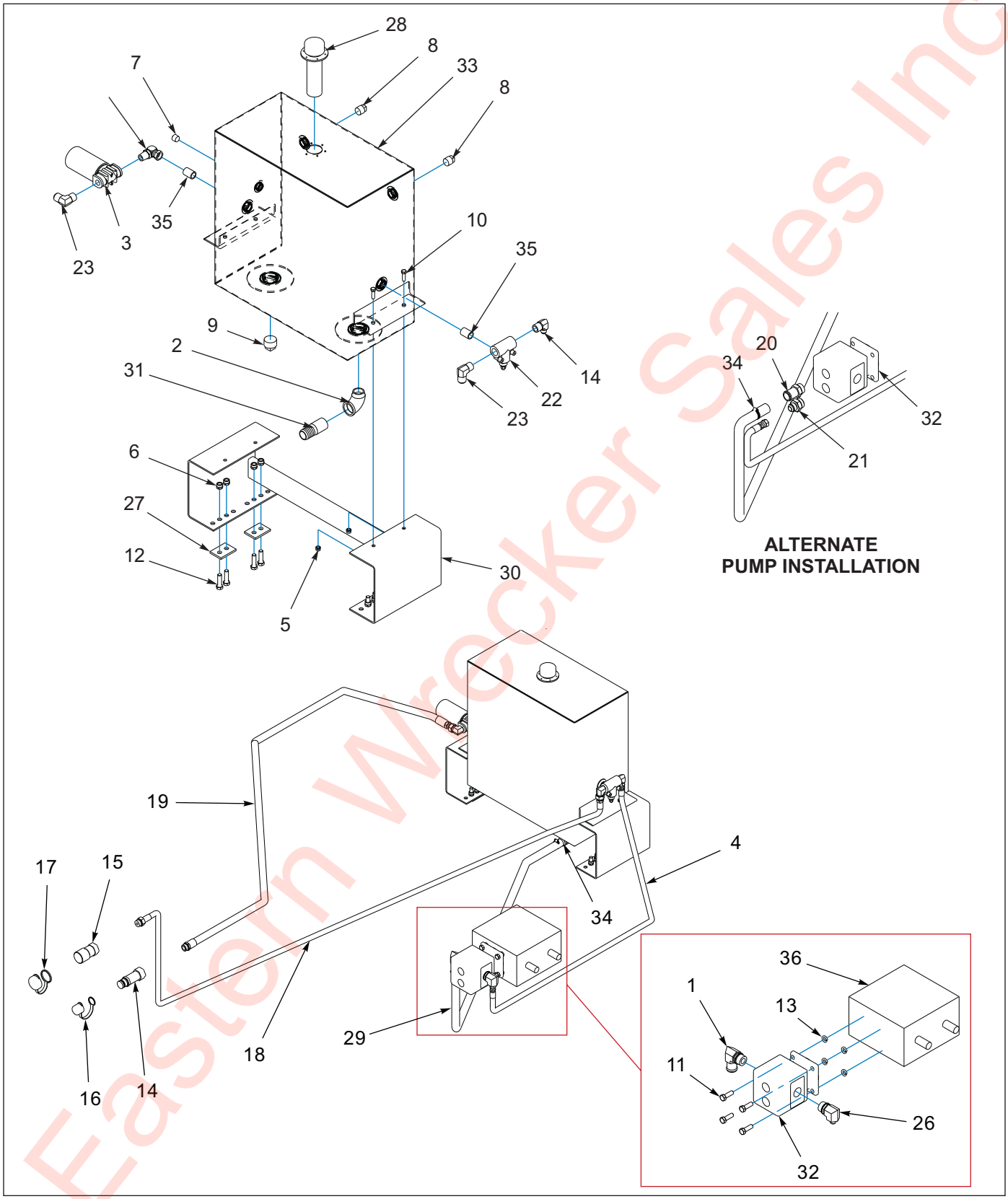

Figure 1-109: Hydraulic Wet Kit Items - 30 Gallon

Eastern Wrecker Sales Inc

Hydraulic Wet Kit Items - 30 Gallon

ITEM	PART NO.	DESCRIPTION	QTY.
	107498	HYDRAULIC WET KIT W/ PTO INSTALLED	- -
	107499	HYDRAULIC WET KIT W/ PTO NOT INSTALLED	- -
	107500	HYDRAULIC WET KIT W/O PTO NOT INSTALLED	- -
1	1-007-010006	ELBOW 90, 1-5/16 O-RING 1-1/4 HOSE	1
2	1-1/4ST ELL	BLACK PIPE ELBOW 90 ST	1
3	1-295-010001	FILTER, RETURN	1
3	1-295-010002	FILTER ELEMENT	1
4	1-397-010301100	HOSE ASSEMBLY 1/2 X 100	1
5	1-512-010005-05	NUT, HEX LOCK 3/8-16 GRB	4
6	1-512-010005-09	NUT, HEX LOCK 1/2-13 GRB	8
7	1-560-010002-04	PIPE PLUG 1/2	1
8	1-560-010002-05	PIPE PLUG 3/4	2
9	1-560-010002-07	PLUG, BLACK PIPE 1-1/4 SQ HEAD	1
10	1-654-010051-06	SCREW, HEX HEAD CAP 3/8-16 X 1-1/4 GR5	4
11	1-654-010055-03	SCREW, HEX HEAD CAP 1/2-13 X 1-1/2 GR5	4
12	1-654-010055-04	SCREW, HEX HEAD CAP 1/2-13 X 1-3/4 GR5	8
13	1-861-010034-13	WASHER, SPLIT LOCK 1/2	4
14	105479	COUPLER, FLAT FACE MALE NOSE	1
15	105480	COUPLER, FLAT FACE FEMALE BODY	1
16	105481	COUPLER, DUST CAP MALE	1
17	105482	COUPLER, DUST CAP FEMALE	1
18	106759	HOSE ASSEMBLY 1/2 X 164	1
19	106760	HOSE ASSEMBLY 3/4 X 164	1
20	107513	ADAPTER	1
21	12-16 070120	ADAPTER	1
22	125130	RD12D HYD BY PASS SRDD	1
23	2024-12-12S	ADAPTER 90	2
24	2024-12-8S	ADAPTER, 90	1
25	2047-12-12S	ELBOW, 90 SWIVEL	1
26	2062-16-8S	ADAPTER, 90	1
27	3-120-010461	BRACKET, HYD TANK MOUNT SUPPORT	4
28	3-162-010001	FILLER-BREATHER-STRAINER ASSEMBLY	1
29	3-399-010001	HOSE, 1-1/4 SUCTION	8’
30	3-482-010503	TANK MOUNT	1
31	3-561-010001	HOSE BARB 1-1/4	1
32	3-591-010001	HYDRAULIC GEAR PUMP	1
33	3-786-010043	TANK, HYDRAULIC	1
34	6828	IDEAL HOSE CLAMP	2
35	C3069X12	NIPPLE, HEX	2
36	PTO	POWER TAKE OFF	- -

Eastern Wrecker Sales Inc

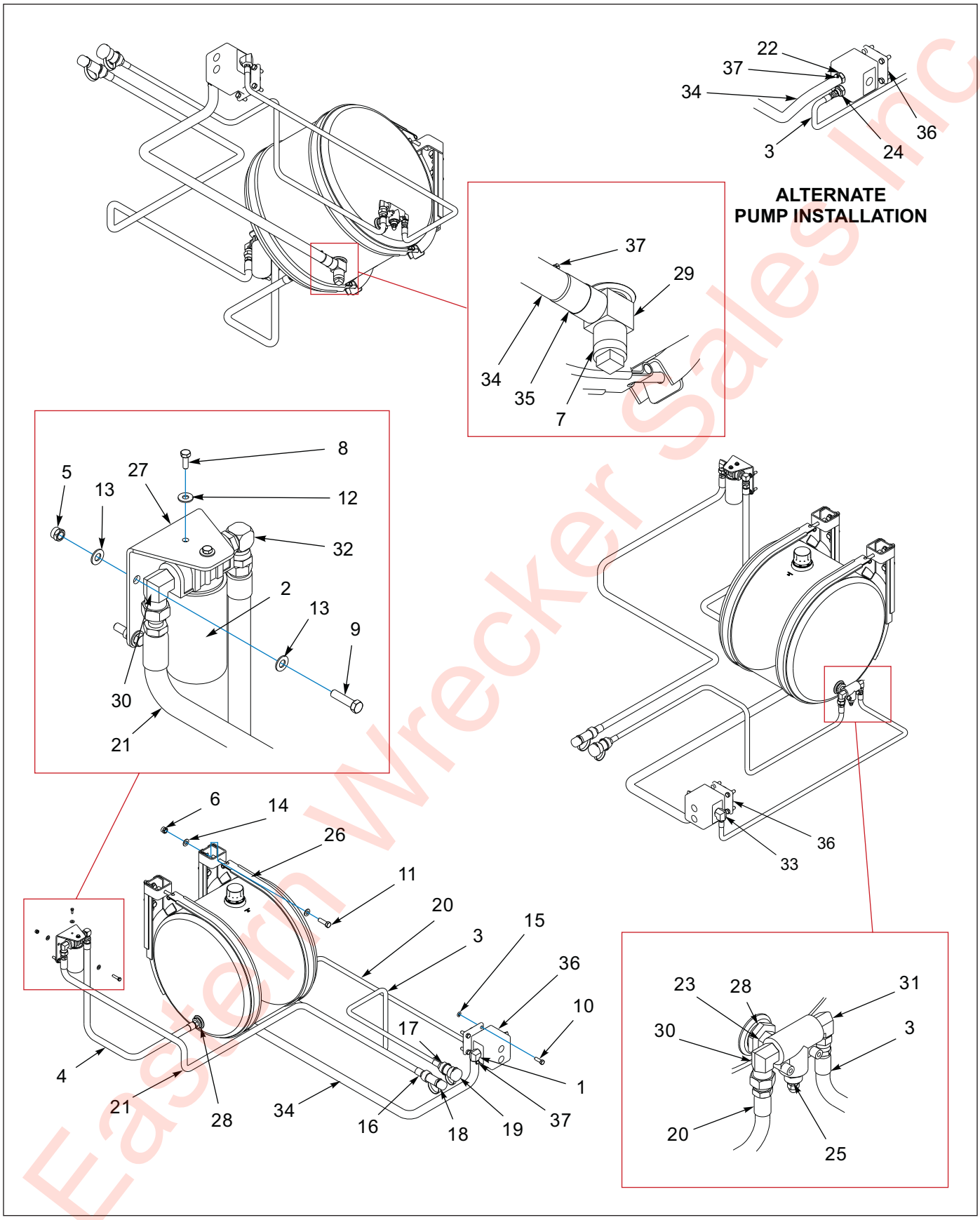

Figure 1-110: Hydraulic Wet Kit Items - 35 Gallon Aluminum

Eastern Wrecker Sales Inc

Hydraulic Wet Kit Items - 35 Gallon Aluminum

ITEM	PART NO.	DESCRIPTION	QTY.
	157663	HYDRAULIC WET KIT, 35 GALLON ALUM	- -
1	1-007-010006	ELBOW 90, 1-5/16 O-RING 1-1/4 HOSE	1
2	1-295-010001	FILTER, RETURN	1
2	1-295-010002	FILTER ELEMENT	1
3	1-397-010301100	HOSE ASSEMBLY 1/2 X 100	1
4	1-397-010313021	HOSE ASSEMBLY 3/4 X 21	1
5	1-512-010005-05	NUT, HEX LOCK 3/8-16 GRB	4
6	1-512-010005-13	NUT, HEX LOCK 5/8-11 GRB	8
7	1-560-010002-07	PLUG, BLACK PIPE 1-1/4 SQ HEAD	1
8	1-654-010047-04	SCREW, HEX HEAD CAP 1/4-20 X 3/4 GR5	2
9	1-654-010051-07	SCREW, HEX HEAD CAP 3/8-16 X 1-1/2 GR5	4
10	1-654-010055-03	SCREW, HEX HEAD CAP 1/2-13 X 1-1/2 GR5	4
11	1-654-010059-05	SCREW, HEX HEAD CAP 5/8-11 X 2 GR5	8
12	1-861-010032-07	WASHER, FLAT 1/4W	2
13	1-861-010032-10	WASHER, FLAT 3/8N	8
14	1-861-010032-18	WASHER, FLAT 5/8N	8
15	1-861-010034-13	WASHER, SPLIT LOCK 1/2	4
16	105479	COUPLER, FLAT FACE MALE NOSE	1
17	105480	COUPLER, FLAT FACE FEMALE BODY	1
18	105481	COUPLER, DUST CAP MALE	1
19	105482	COUPLER, DUST CAP FEMALE	1
20	106759	HOSE ASSEMBLY 1/2 X 164	1
21	106760	HOSE 3/4 X 164	1
22	107513	ADAPTER	1
23	118-2658-10	NIPPLE HEX 1/2 X 1/2	1
24	12-16 070120	ADAPTER	1
25	125130	RD12D HYDRAULIC BY PASS SRDD	1
26	157662	ALUMINUM HYDRAULIC OIL TANK	1
27	157664	HYDRAULIC FILTER BRACKET	1
28	20-12 140140	REDUCER, STR	2
29	20-20-20 140424	TEE	1
30	2024-12-12S	ADAPTER, 90	2
31	2024-12-8S	ADAPTER, 90	1
32	2047-12-12S	ELBOW, 90 SWIVEL	1
33	2062-16-8S	ADAPTER, 90	1
34	3-399-010001	HOSE, 1-1/4 SUCTION	8
35	3-561-010001	HOSE BARB 1-1/4	1
36	3-591-010001	HYDRAULIC GEAR PUMP	1
37	6828	IDEAL HOSE CLAMP	2

Eastern Wrecker Sales Inc

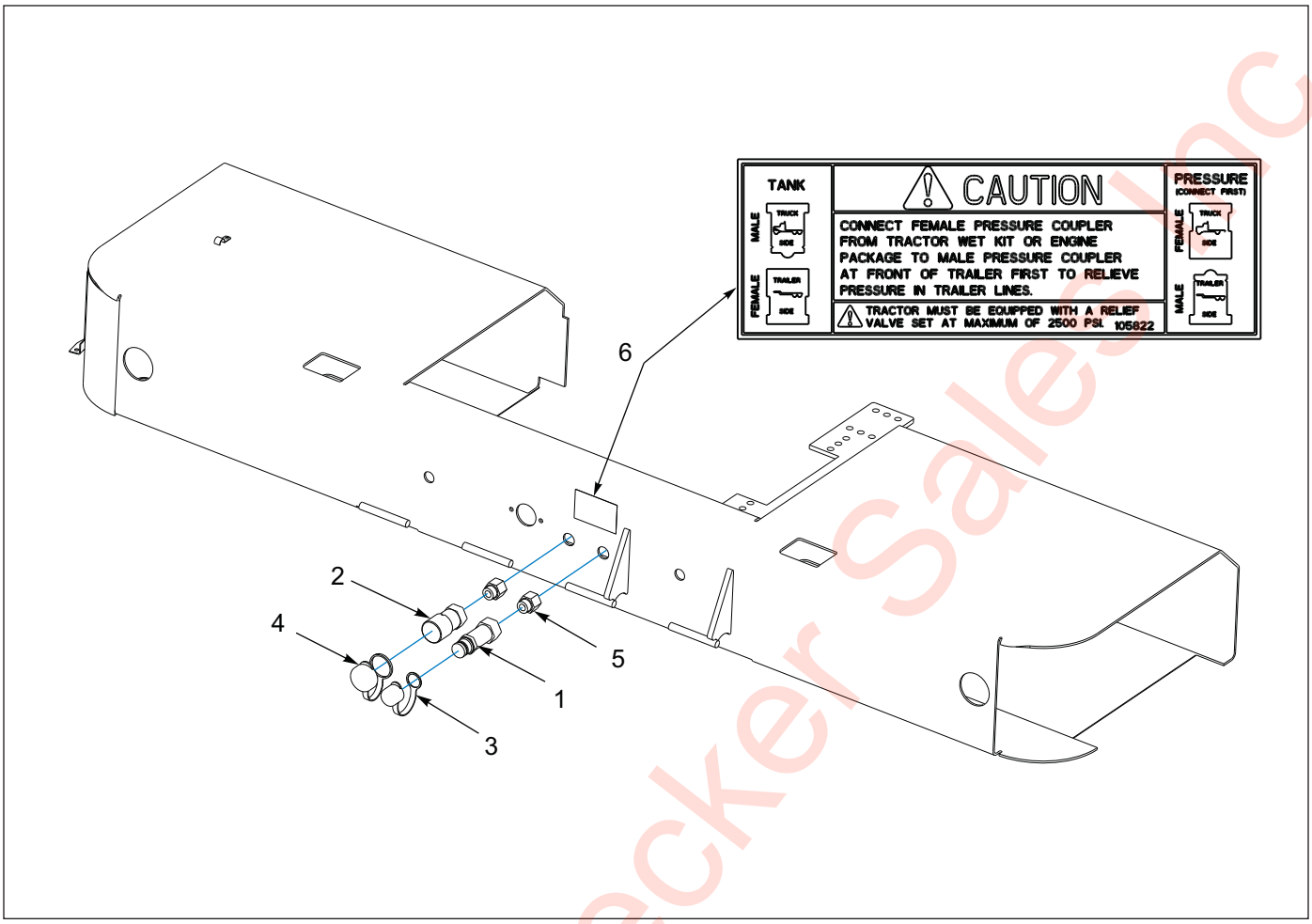

Figure 1-111: Hydraulic Conversion Kit - Ball to Flat

Hydraulic Conversion Kit - Ball to Flat

ITEM	PART NO.	DESCRIPTION	QTY.
	105902	HYDRAULIC CONVERSION KIT, BALL TO FLAT	- -
1	105479	COUPLER, FLAT FACE MALE NOSE	1
2	105480	COUPLER, FLAT FACE FEMALE BODY	1
3	105481	COUPLER, DUST CAP MALE	1
4	105482	COUPLER, DUST CAP FEMALE	1
5	2216-12-12S	INTERNAL PIPE O-RING BOSS	2
6	105822	DECAL, HYD COUPLER	1

Eastern Wrecker Sales Inc

Table provided for general use.

NOTES:

Eastern Wrecker Sales Inc

Hydraulic Park Stand

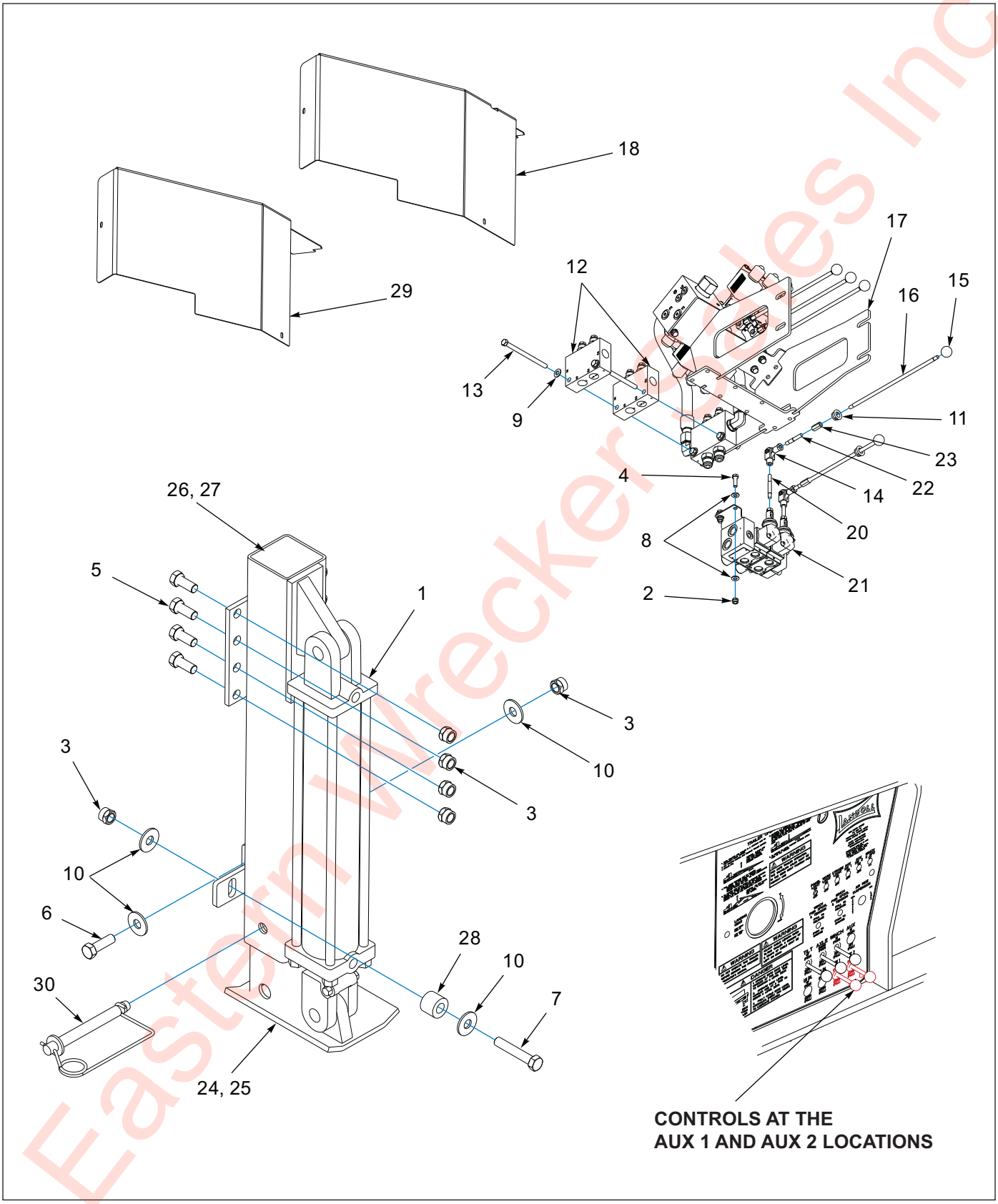

Figure 1-112: Hydraulic Park Stand - General Items

Eastern Wrecker Sales Inc

Hydraulic Park Stand - General Items

ITEM	PART NO.	DESCRIPTION	QTY.
	195371	PARK STAND, HYD 400A X 102’	- -
	195372	PARK STAND, HYD 400A X 102’ ARCTIC	- -
	195374	PARK STAND, HYD 400A X 108’	- -
	195375	PARK STAND, HYD 400A X 108’ ARCTIC	- -
	195376	PARK STAND, HYD 400A X 120’	- -
	195377	PARK STAND, HYD 400A X 120’ ARCTIC	- -
1	1-242-010180-2	CYLINDER, HYDRAULIC 3-1/2 X 20 3000 PSI **(SEE PAGE 1-206)**	2
2	1-512-010005-03	NUT, HEX LOCK 5/16-18 GRB	4
3	1-512-010005-13	NUT, HEX LOCK 5/8-11 GRB	20
4	1-654-010049-05	SCREW, HEX HEAD CAP 5/16-18 X 1 GR5	4
5	1-654-010059-03	SCREW, HEX HEAD CAP 5/8-11X1-1/2 GR5	16
6	1-654-010059-05	SCREW, HEX HEAD CAP 5/8-11 X 2 GR5	2
7	1-654-010059-11	SCREW, HEX, 5/8-11 UNC X 3-1/2 GR5	2
8	1-861-010032-08	WASHER, FLAT 5/16W	8
9	1-861-010032-10	WASHER, FLAT 3/8W	2
10	1-861-010032-19	WASHER, FLAT 5/8W	8
11	178444	BUSHING NYLON INSERT 9/16ID	2
12	184585	VALVE,DUAL COUNTER BALANCE,30G	2
13	185216	SCREW,HXCAP3/8-16UNCX5-1/4GR5	2
14	186875	CLEVIS JOINT,ROD ENDS M8.1.25	2
15	186877	KNOB,1" ROUND,M8X1.25 THD	- -
16	186878	ROD HANDLE	- -
17	186886	VALVE ASSY, 3 SP, 35 GPM, SOLE	- -
18	186890	SHIELD HYD CONTROLS	1
19	186900	FRAME ASSY 400A G/N	- -
20	186902	STUD M8X1.25X65MM,DBL THD	2
21	189260	VALVE, 2 SPOOL, MOTOR, MANUAL	1
22	193910	STUD M8-1.25X50MM DBLE THD	2
23	193911	COUPLING NUT,M8-1.25X24MM ZINC	2
24	195378	PARK STAND WLDMT,HYD LH LEG400	1
25	195379	PARK STAND WLDMT,HYD RH LEG400	1
26	195380	PARK STAND WLDMT HYD LH 400A	1
27	195381	PARK STAND WLDMT HYD RH400A	1
28	195383	TUBE RD 1-1/2X3/4X1-3/16	2
29	195384	SHIELD HYD CONTROLS SHORT	1
30	346SL	LOCK HITCH PIN	2

Eastern Wholesaler Sales Inc

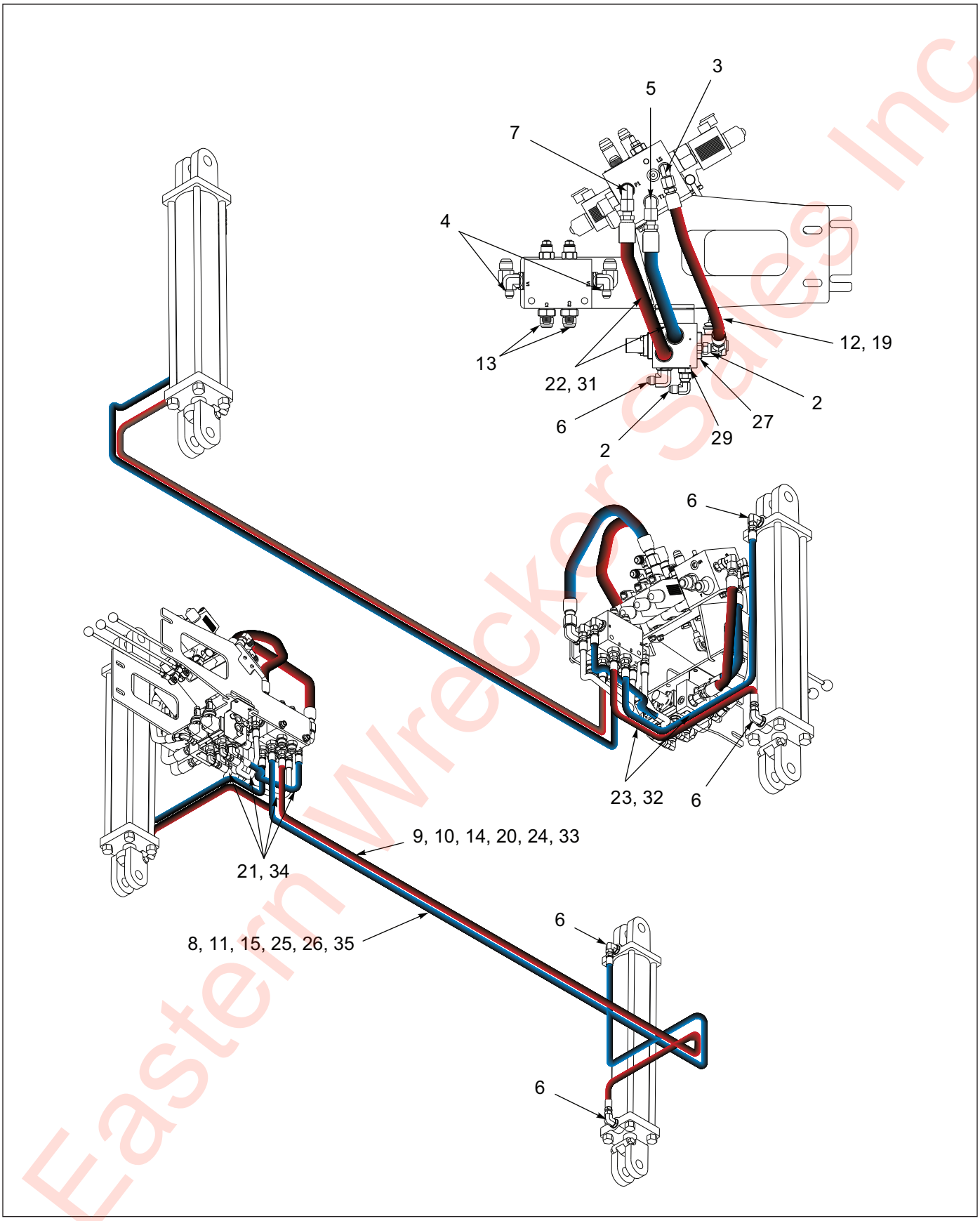

Figure 1-113: Hydraulic Park Stand - Hydraulic Items

Eastern Wrecker Sales Inc

Hydraulic Park Stand - Hydraulic Items

ITEM	PART NO.	DESCRIPTION	QTY.					
	195371	PARK STAND, HYD 400A X 102'	- -					
	195372	PARK STAND, HYD 400A X 102' ARCTIC		- -				
	195374	PARK STAND, HYD 400A X 108'			- -			
	195375	PARK STAND, HYD 400A X 108' ARCTIC				- -		
	195376	PARK STAND, HYD 400A X 120'					- -	
	195377	PARK STAND, HYD 400A X 120' ARCTIC						- -
1	1-242-010180-2	CYLINDER,HYD 3-1/2X20 3000PSI (SEE PAGE 1-206)	- -	- -	- -	- -	- -	- -
2	102-0031	ADAPTER,90 JIC SWIVEL #6	3	3	3	3	3	3
3	102-1238	ADAPTOR,90-#4 O-RING/#6 JIC	1	1	1	1	1	1
4	102-1333	FTG,90EL 06SAEM X 10 O'RINGM	4	4	4	4	4	4
5	2062-6-8S	ADAPTER 90" 562 O-RING-.75JIC	1	1	1	1	1	1
6	2062-8-6S	ELBOW,90,#8 SAE X #6 JIC	6	6	6	6	6	6
7	2071-8-8S	ADAPTER90 #8 FLR SWIVEL #8JIC	1	1	1	1	1	1
8	7779-102	HOSE HYD 1/4 X 102	1	--	--	--	--	--
9	7779-78	HOSE HYD 1/4 X 78	1	--	--	--	--	--
10	7779-84	HOSE HYD 1/4 X 84	--	--	1	--	--	--
11	125648	HOSE ASSY 1/4X108,#6JICFEMALE	--	--	1	--	--	--
12	130644	HOSE ASSY 3/8X16,9/16JIC ST	1	--	1	--	1	--
13	146707	ADAPTER,#10 O-RING #6 TUBE	4	4	4	4	4	4
14	169628	HOSE 3/8X84 ARCTIC #6 JIC STR	--	--	--	1	--	--
15	172865	HOSE 3/8X120 ARCTIC #6JIC STR	--	--	--	--	--	1
16	187585	TUBE, CLAMP	- -	- -	- -	- -	- -	- -
17	186886	VALVE ASSY, 3 SP, 35 GPM, SOLE	- -	- -	- -	- -	- -	- -
18	189260	VALVE, 2 SPOOL, MOTOR, MANUAL	- -	- -	- -	- -	- -	- -
19	189341	HOSE 3/8X16 ARCTIC #6JIC STR	--	1	--	1	--	1
20	193435	HOSE ARCTIC 3/8X100SAE37 STR	--	--	--	--	--	1
21	193907	HOSE ARCTIC,3/8X30,#6JIC STR	--	4	--	4	--	4
22	193908	HOSE ARCTIC 1/2X18#8JIC STR	--	2	--	2	--	2
23	195385	HOSE ARCTIC 3/8X46 #6JIC STR	--	2	--	2	--	2
24	195386	HOSE ARCTIC 3/8X78 #6JIC STR	--	1	--	--	--	--
25	195387	HOSE ARCTIC 3/8X102 #6JIC STR	--	1	--	--	--	--
26	195388	HOSE ARCTIC 3/8X108 #6JIC STR	--	--	--	1	--	--
27	202702-4-6S	ADAPTER, #4 O-RING TO #6 JIC	1	1	1	1	1	1
28	202702-6-8S	ADAPTER, #6 SAE X #8 JIC	1	1	1	1	1	1
29	202702-8-6S	ADAPTER #8 O-RING TO #6 TUBE	2	2	2	2	2	2
30	202702-8-8S	ADAPTER #8 O-RING TO #8 TUBE	2	2	2	2	2	2
31	1422896	HOSE ASSY OUTLET LOOP	2	--	2	--	2	--
32	71500165	HOSE, .25 X 46 IN.	2	--	2	--	2	--
33	71509004	HOSE .25 X 98	--	--	--	--	1	--
34	71509125	HOSE .25 X 30	4	--	4	--	4	--
35	71600529	HOSE ASSY .25X120"	--	--	--	--	1	--

Eastern Wrecker Sales Inc

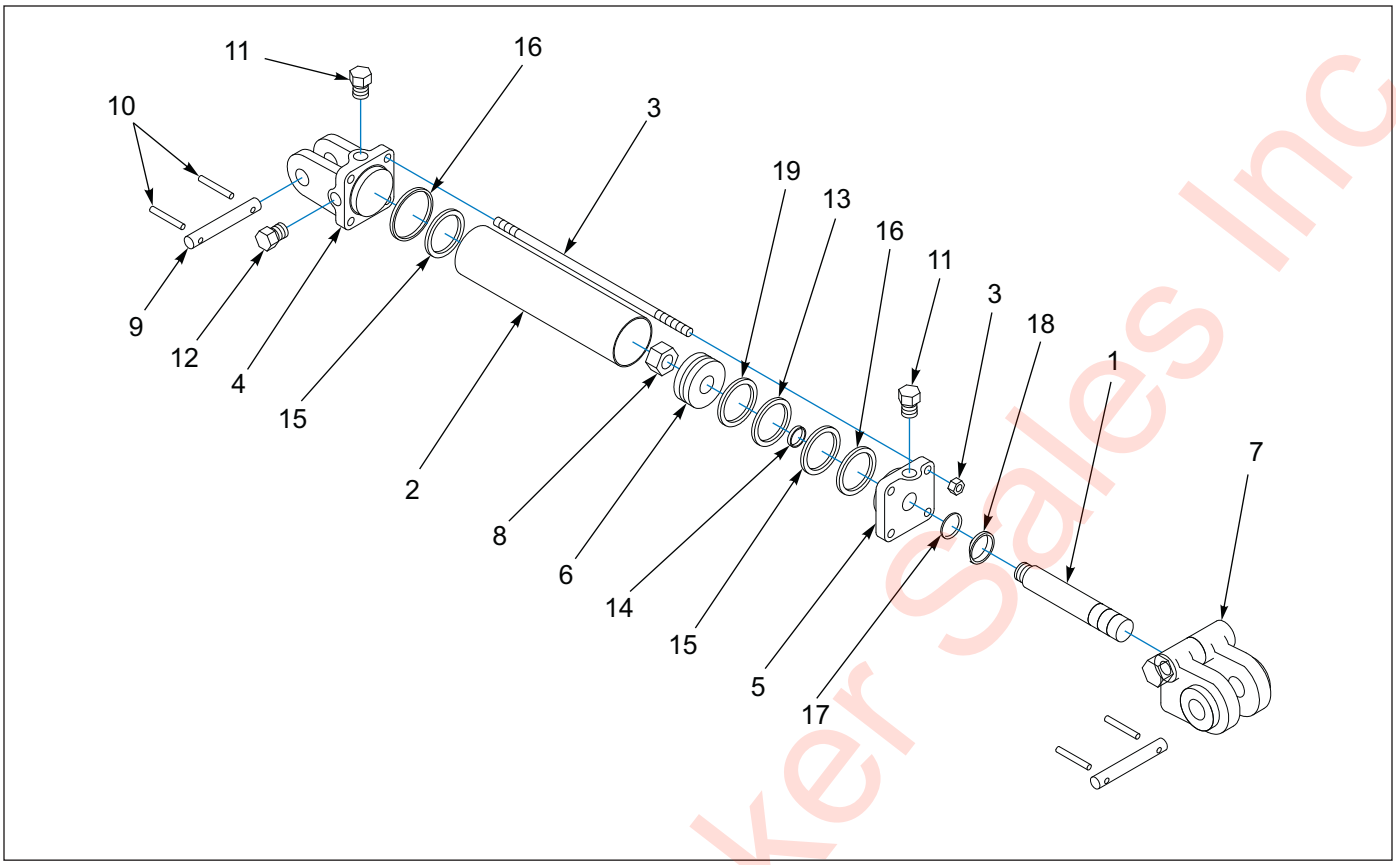

Figure 1-114: Hydraulic Cylinder - 3-1/2 X 20

Hydraulic Cylinder - 3-1/2 X 20

ITEM	PART NO.	DESCRIPTION	QTY.
	1-242-010180-2	CYLINDER, HYDRAULIC 3-1/2X20	- -
1	010700437	PISTON ROD	1
2	-----	TUBE	1
3	-----	TIEROD ASSEMBLY	4
4	-----	BUTT	1
5	111870	GLAND ASSEMBLY	1
6	-----	PISTON	1
7	-----	CLEVIS ASSEMBLY	1
8	-----	LOCKNUT	1
9	-----	CLEVIS PIN	2
10	-----	COTTER PIN	4
11	-----	PLASTIC PLUG	2
12	-----	PORT PLUG	1
13	-----	CROWN SEAL	1
14	-----	O-RING	1
15	-----	O-RING	2
16	-----	BU-WASHER	2
17	-----	U-CUP	1
18	-----	WIPER	1
19	-----	BEARING RING	1
20	1-242-010178-2	PACKING KIT **(ITEMS 13-19)**	- -

Eastern Wrecker Sales Inc

Table provided for general use.

NOTES:

Eastern Wrecker Sales Inc

Light Installations - Options

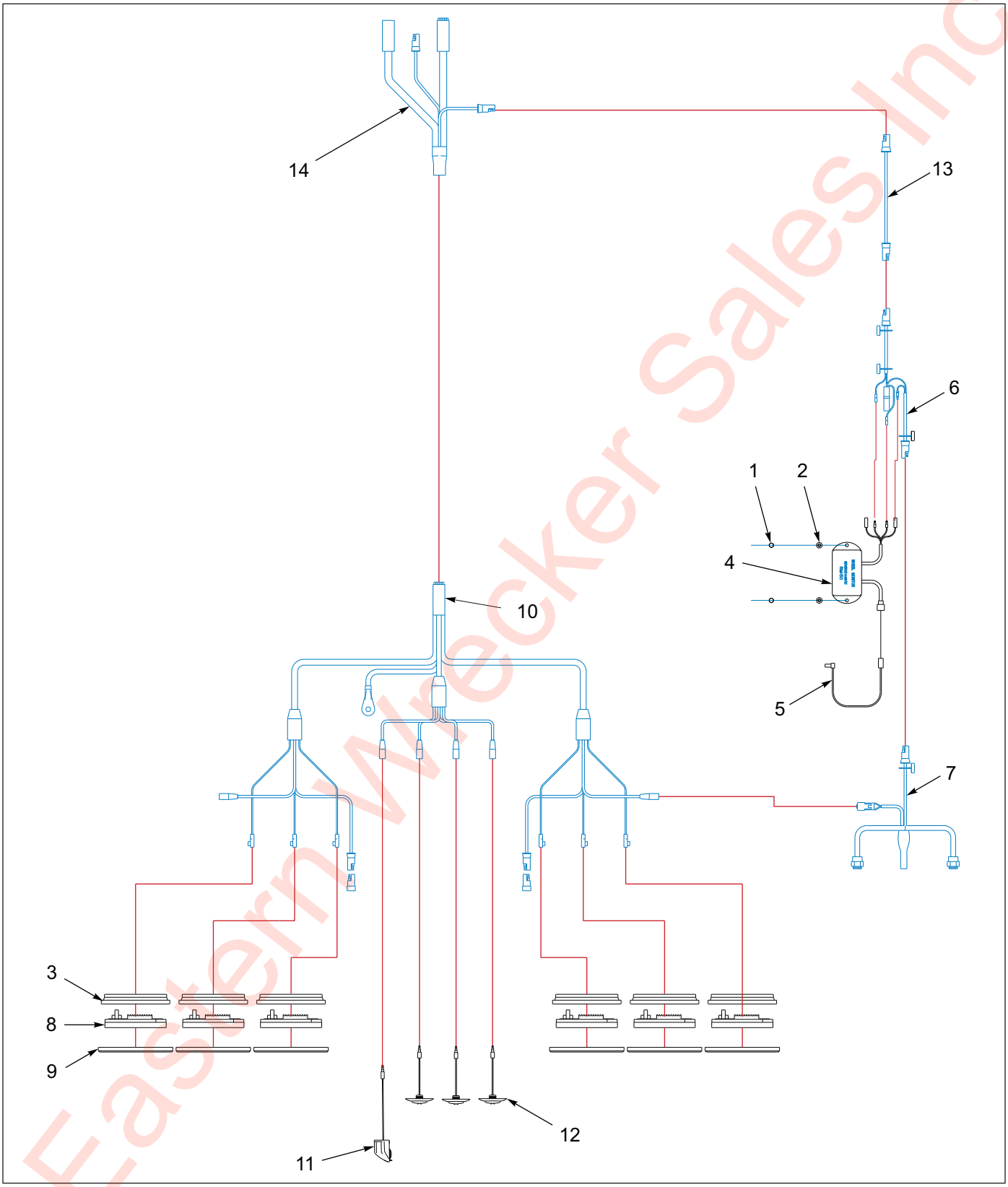

Figure 1-115: Backup Alarm/Light Installation

Eastern Wrecker Sales Inc

Backup Alarm/Light Installation

ITEM	PART NO.	DESCRIPTION	QTY.
	150329	BACKUP ALARM/LIGHT INSTALLATION	- -
1	1-654-010047-04	SCREW, HEX HEAD CAP 1/4-20 X 3/4 GR5	6
2	108417	NUT, HEX FLANGE SPIRALOCK 1/4-20	6
3	143114	GROMMET, OVAL GROTE	8
4	150072	REVERSE DETN MODULE AND SENSOR	1
5	137559	SENSOR DIRECTIONAL CABLE, BACK-UP	1
6	150074	HARNESS, MODULE/ALARM	1
7	166872	HARNESS, BACKUP LIGHT/ALARM	1
8	179902	LIGHT S/T/T RED, CLEAR LENDS GROTE	6
9	180570	COVER, CHROME OBLONG GROMMET	6
10	187859	HARNESS, BUMPER MICRONOVA GROTE	1
11	187860	LIGHT ASSY, LICENSE LED GROTE	1
12	187864	LIGHT, RED LED, .75CL/MK CLEAR CB	5
13	3-368-010252	HARNESS ASSY, BKHD LIGHT EXT	1
14	143103	HARNESS, E-CHAIN GROTE	1

Eastern Wrecker Sales Inc

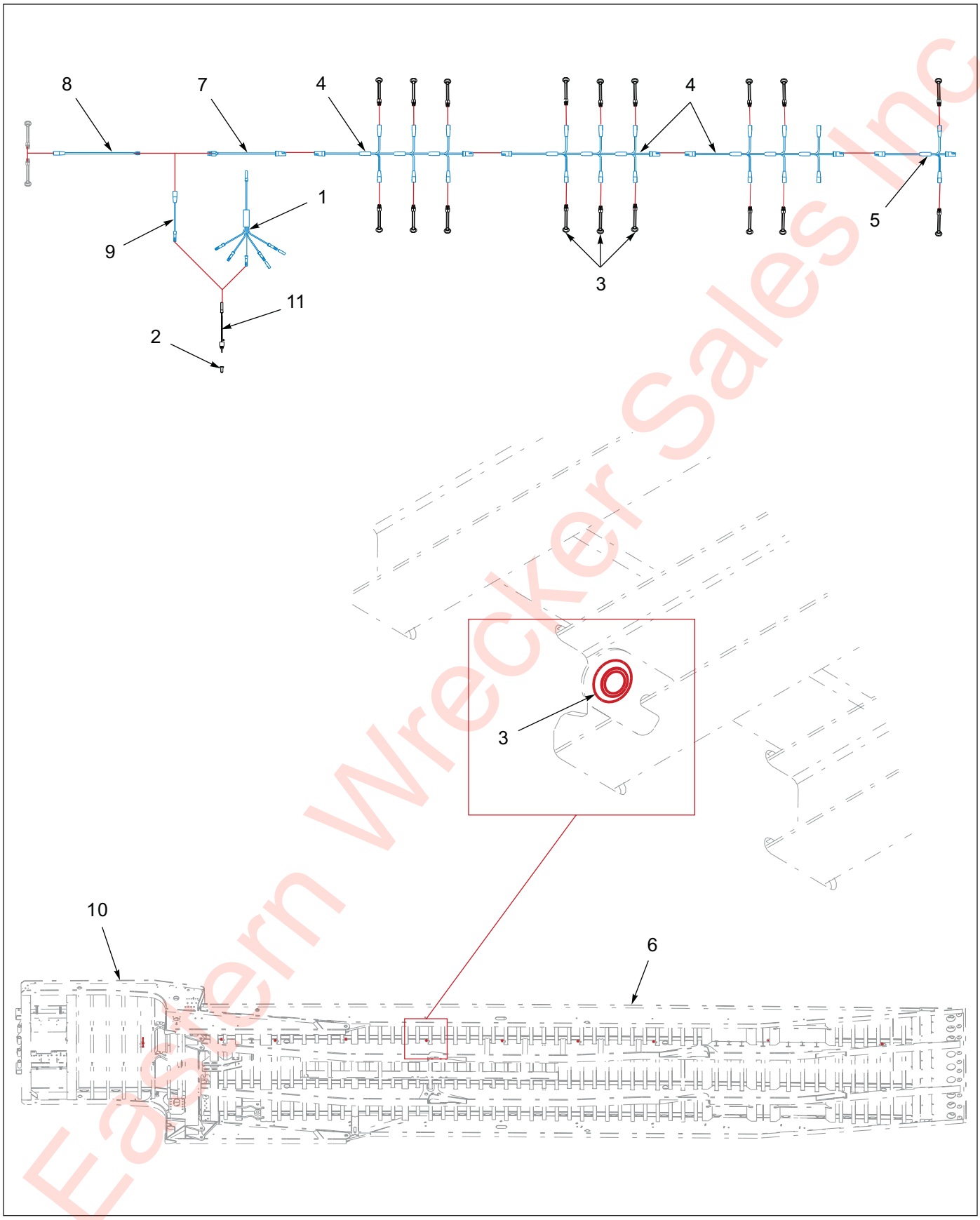

Eastern Wrecker Sales Inc

Figure 1-116: Under Deck - Lighting Installation

Under Deck - Light Installation

ITEM	PART NO.	DESCRIPTION	QTY.		
	214403	INSTL WRK ZONE LIGHTS 41 FT., 440-455	- -		
	214404	INSTL WRK ZONE LIGHTS 48-50 FT., 440-455		- -	
	214405	INSTL WRK ZONE LIGHTS 53 FT., 440-455			- -
1	150093	HARNESS, 5 AUX BRANCHS GROTE	- -	- -	- -
2	150117	TOGGLE SWITCH SEALED SPST	1	1	1
3	183413	LIGHT WHY LED .75 CL/MK GROTE	16	20	22
4	187856	HARNESS, MARKER MID DECK	2	3	3
5	187857	HARNESS, MARKER ADDITION	1	1	1
6	188995	FRAME, WLDMT, 440A-50CA-102	- -	- -	- -
7	202191	HARNESS, JUMPER 48 IN.	1	1	1
8	204194	HARNESS, MARKER EXT 60 IN.	1	1	1
9	213288	HARNESS, MARKER LAMP 12 IN.	1	1	1
10	213978	G/N WDLMT 400B TOP TLBX	- -	- -	- -
11	81264	RUBBER BOOT FOR ELECT SWITCH	1	1	1

Eastern Wrecker Sales Inc

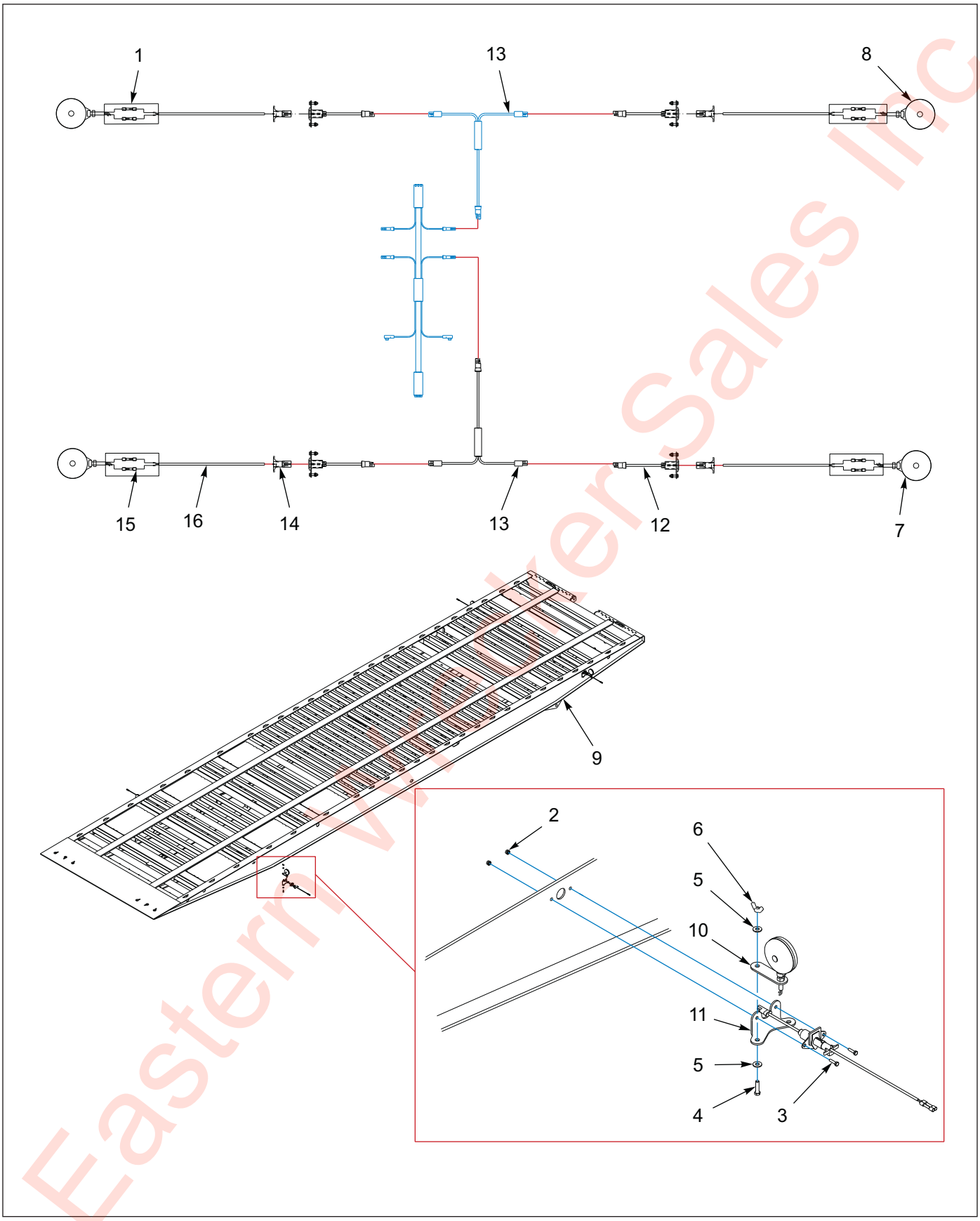

Figure 1-117: Four Corner Light Installation

Eastern Walker Sales Inc

Four Corner Light Installation

ITEM	PART NO.	DESCRIPTION	QTY.
	148576	FOUR CORNER LIGHT INSTALLATION	- -
1	0013007	TUBING, HEAT SHRINK	1
2	1-512-010005-01	NUT, HEX LOCK 1/4-20 GRB	6
3	1-654-010047-06	SCREW, HEX HEAD CAP 1/4-20 X 1 GR5	2
4	1-654-010051-07	SCREW, HEX HEAD CAP 3/8-16 X 1-1/2 GR5	2
5	1-861-010032-11	WASHER, FLAT 3/8W	12
6	103-0924	NUT, WING 3/8-16	4
7	129893	LAMP, YELLOW TURN SIGNAL STUD MOUNT	2
8	129894	LAMP, RED TURN SIGNAL STUD MOUNT	2
9	-----	FRAME WELDMENT	- -
10	139132	BRACKET, LAMP MOUNTING SWING	4
11	139133	BRACKET, LAMP MOUNTING STATIONARY	4
12	150116	HARNESS/RECEPTACLE ASSEMBLY	1
13	167965	HARNESS, JUMPER T-POWER	2
14	3-272-010010	CONNECTOR, ELECT 4 POLE MALE	4
15	3-272-010021	ELECT BUTT SPLICE 16/14 W/ SEAL	3
16	W214S-1	CABLE, 2 WIRE 14AWG PVCJKT 105	- -

Eastern Wrecker Sales Inc

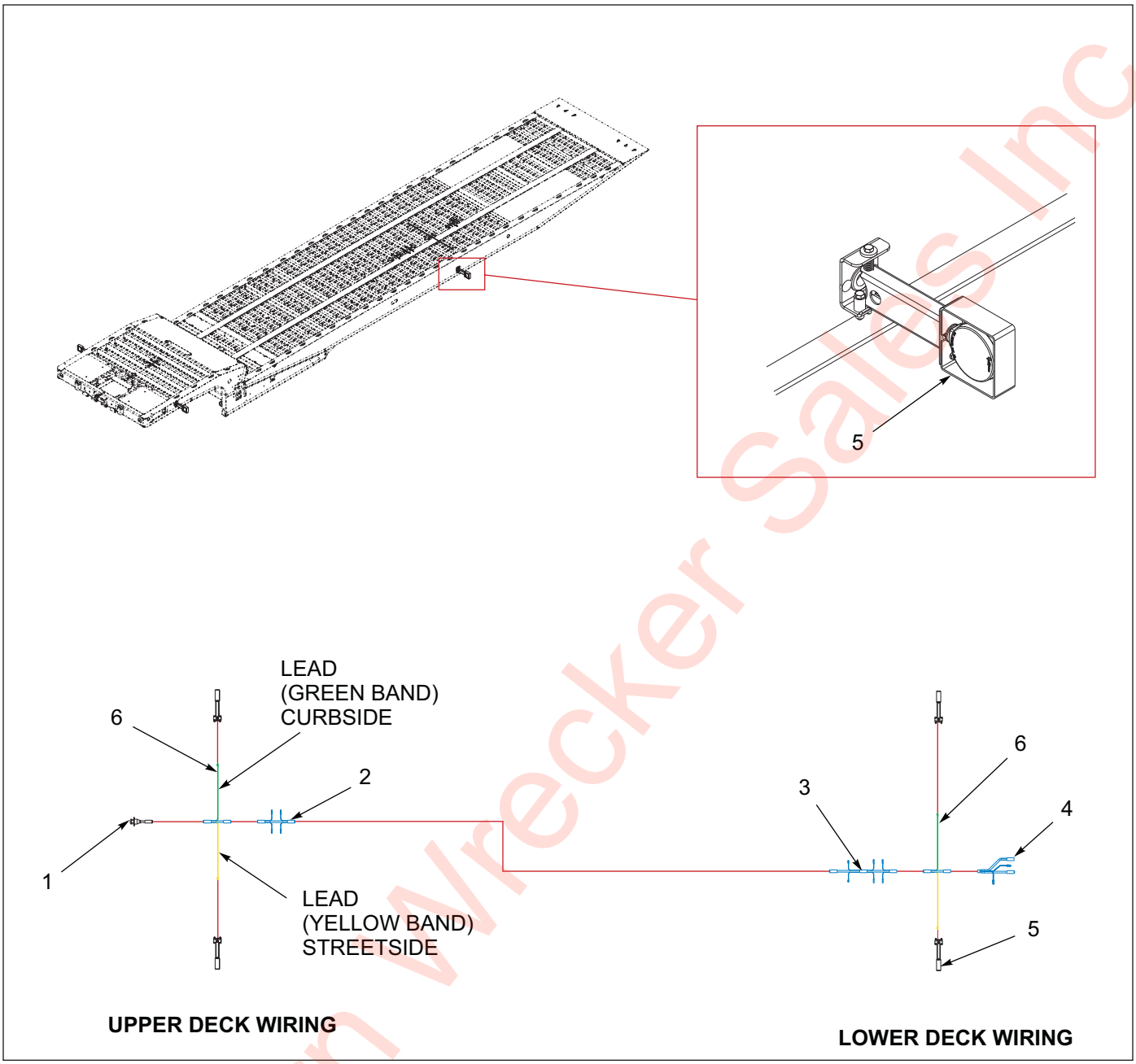

Figure 1-118: Swingout Light Installation

Swingout Light Installation

ITEM	PART NO.	DESCRIPTION	QTY.
	179089	SWINGOUT LIGHT INSTALLATION	- -
1	143100	HARNESS, 7 WAY RECEPTACLE	- -
2	143101	HARNESS, FRONT MAIN	- -
3	143102	HARNESS, BED MAIN	- -
4	143103	HARNESS, E-CHAIN	- -
5	176420	SWING ARM LIGHT ASSY **(SEE PAGE 1-215)**	2
6	176432	HARNESS JUMPER EMERGENCY FLASH	1

Eastern Wrecker Sales Inc

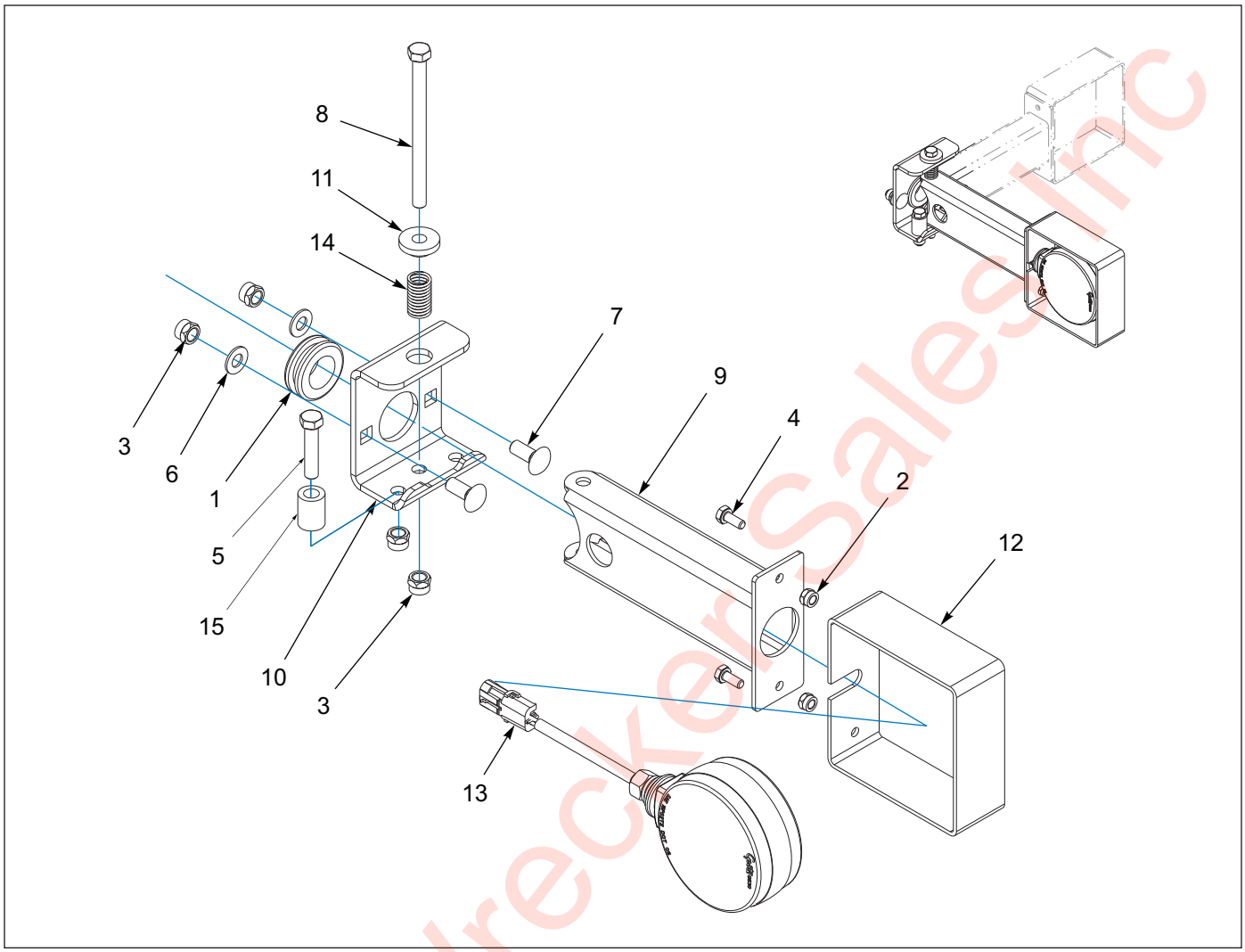

Figure 1-119: Swing-Arm Light Assembly - Turn Signal/Emergency Flasher

Swing-Arm Light Installation - Turn Signal/Emergency Flasher

ITEM	PART NO.	DESCRIPTION	QTY.
	176420	SWING ARM LIGHT ASSEMBLY	- -
1	1-343-010007	GROMMET	1
2	1-512-010005-01	NUT, HEX LOCK 1/4-20 GRB	2
3	1-512-010005-05	NUT, HEX LOCK 3/8-16 GRB	4
4	1-654-010047-03	SCREW, HEX HEAD CAP 1/4-20 X 5/8 GR5	2
5	1-654-010051-08	SCREW, HEX HEAD CAP 3/8-16 X 1-3/4 GR5	1
6	1-861-010032-10	WASHER, FLAT 3/8N	2
7	111276	SCREW, RD HEAD SQ NECK 3/8-16 X 1 GR5	2
8	172882	SCREW, HEX HEAD CAP 3/8-16 X 5 GR5	1
9	176421	LIGHT SWING-ARM WELDMENT	1
10	176424	BRACKET MOUNTING, SWING-ARM LIGHT	1
11	176425	WASHER, STEP	1
12	176440	MOUNT/GUARD, PEDESTAL LIGHT	1
13	178384	LIGHT, YELLOW LED 4” DOUBLE FACE	1
14	178389	SPRING, COMPRESSION SWING-ARM LIGHT	1
15	2-150-010240	BUSHING, STOP SPRAY SHIELD	1

Eastern Wrecker Sales Inc

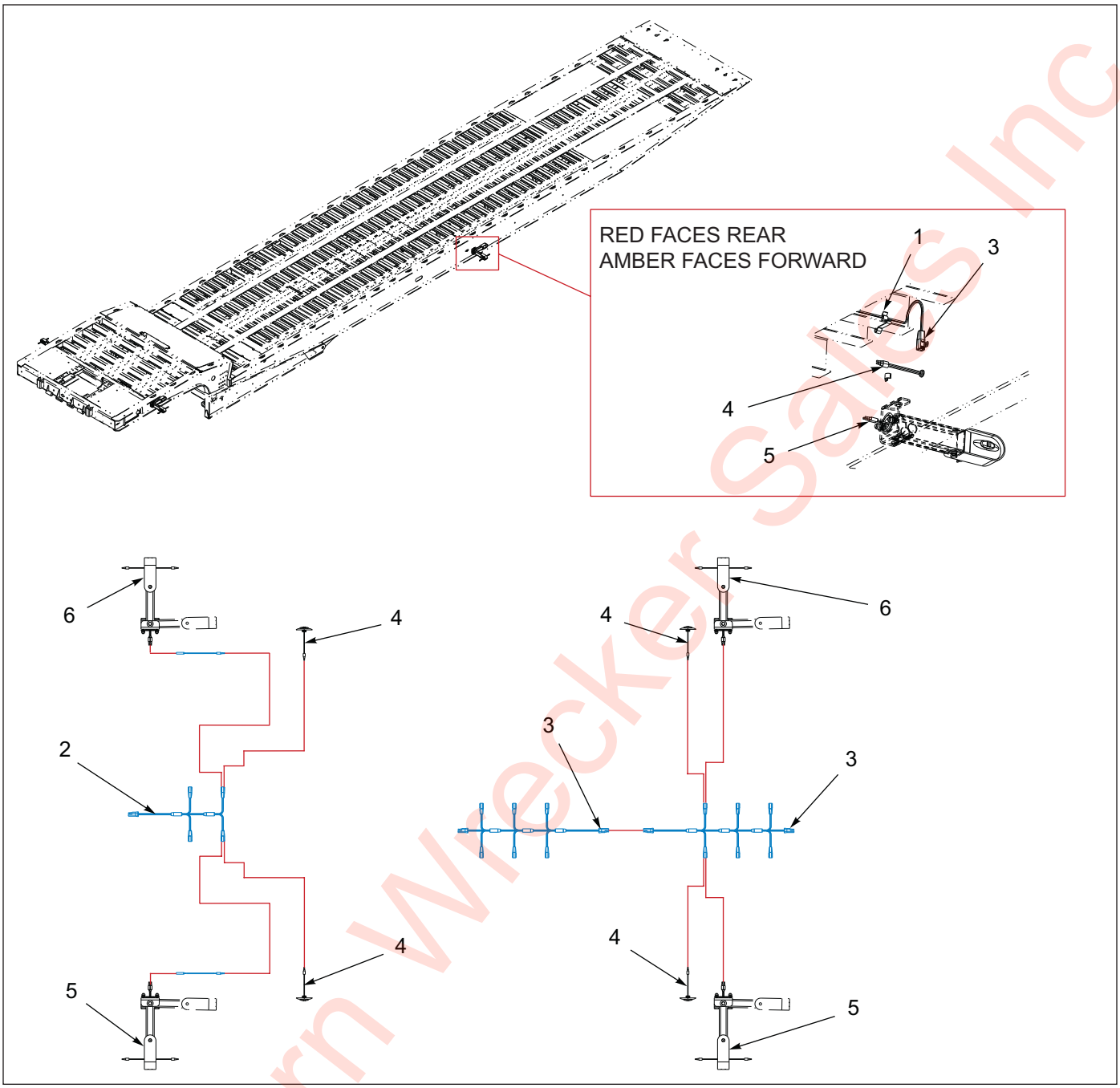

Figure 1-120: Swingout Marker Light Installation - Red/Amber

Swingout Marker Light Installation - Red/Amber

ITEM	PART NO.	DESCRIPTION	QTY.
	191557	LIGHT, SWING OUT MARKER, LWR DK ONLY	- -
1	187833	CLIP HARNESS, CROSS-MEMBER	- -
2	187855	HARNESS MARKER UPR DECK	- -
3	187856	HARNESS MARKER MID DECK	- -
4	187863	LIGHT YEL LED.75CL/MK CLEAR CB	- -
5	191555	LIGHT ASSY,SWING-ARM MKR,STREET **(SEE PAGE 1-217)**	1
6	191556	LIGHT ASSY,SWING-ARM MKR,CURB **(SEE PAGE 1-218)**	1

Eastern Wrecker Sales Inc

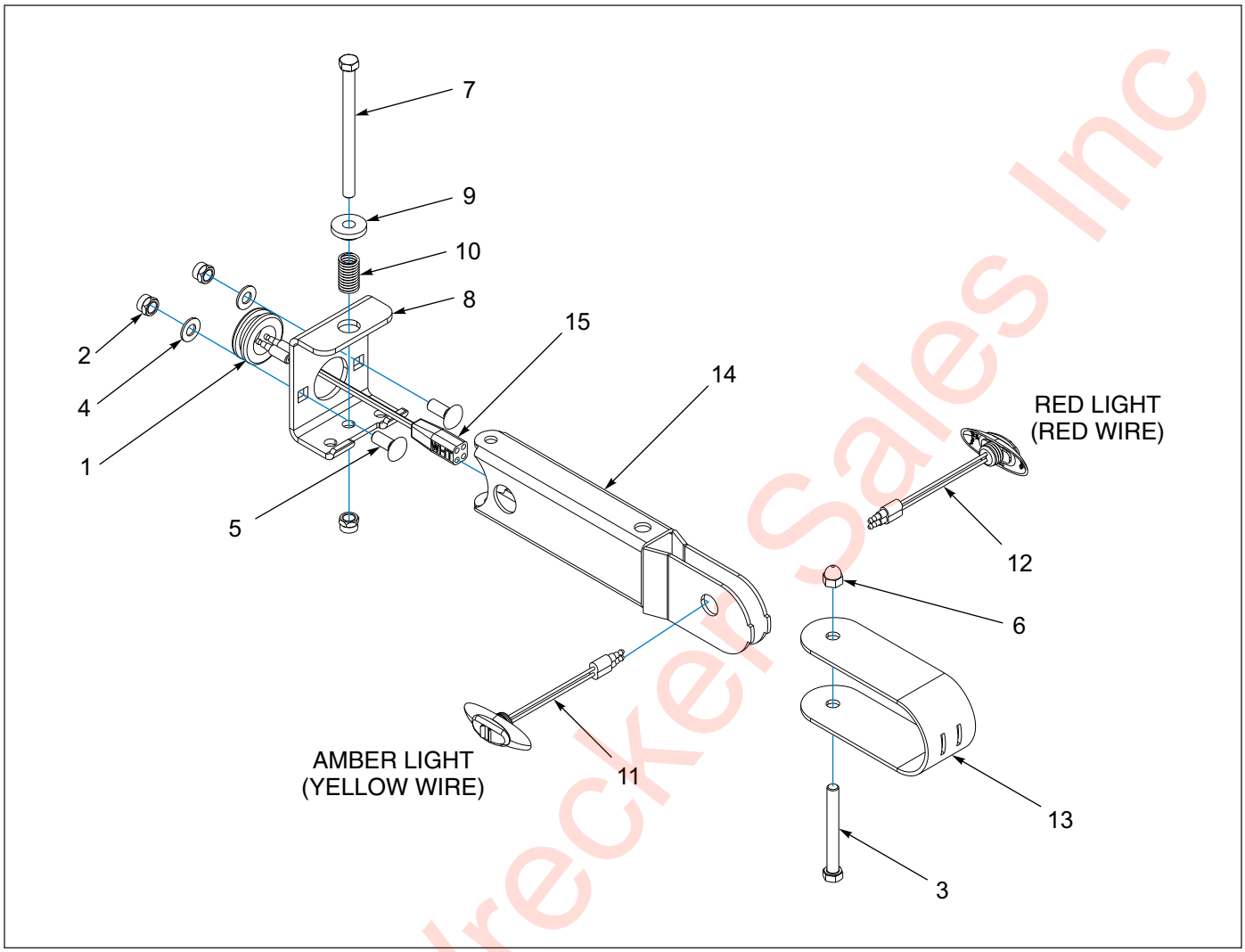

Figure 1-121: Swing-Arm Light Assembly - STREET

Swing-Arm Marker Light Assembly - STREET

ITEM	PART NUMBER	DESCRIPTION	QTY.
	191555	LIGHT ASSY,SWING-ARM MKR,ST	- -
1	1-343-010007	GROMMET	1
2	1-512-010005-05	NUT, HEX, SLFLKG GRB 3/8-16	3
3	1-654-010051-14	SCREW HX CP 3/8-16UNCX3-1/4G5	1
4	1-861-010032-10	WASHER, FLAT 3/8" N ZP/CD	2
5	111276	SCREW RDHD SQNK 3/8-16X1 GR5	2
6	122154	NUT, HEX ACORN 3/8-16ZP	1
7	172882	SCREW HX CP 3/8-16UNCX5 GR5	1
8	176424	BRACKET MTG SWING-ARM LIGHT	1
9	176425	WASHER STEP	1
10	178389	SPRING, COMPRESSION SWINGARM	1
11	187863	LIGHT YEL LED.75CL/MK CLEAR CB	1
12	187864	LIGHT RED LED.75CL/MK CLEAR CB	1
13	191552	GUARD SWING-OUT LIGHT	1
14	191554	SWING-ARM WLDMT MARKER LIGHT	1
15	191568	HARNESS MARKER LAMP MICRONOVA	1

Eastern Wrecker Sales Inc

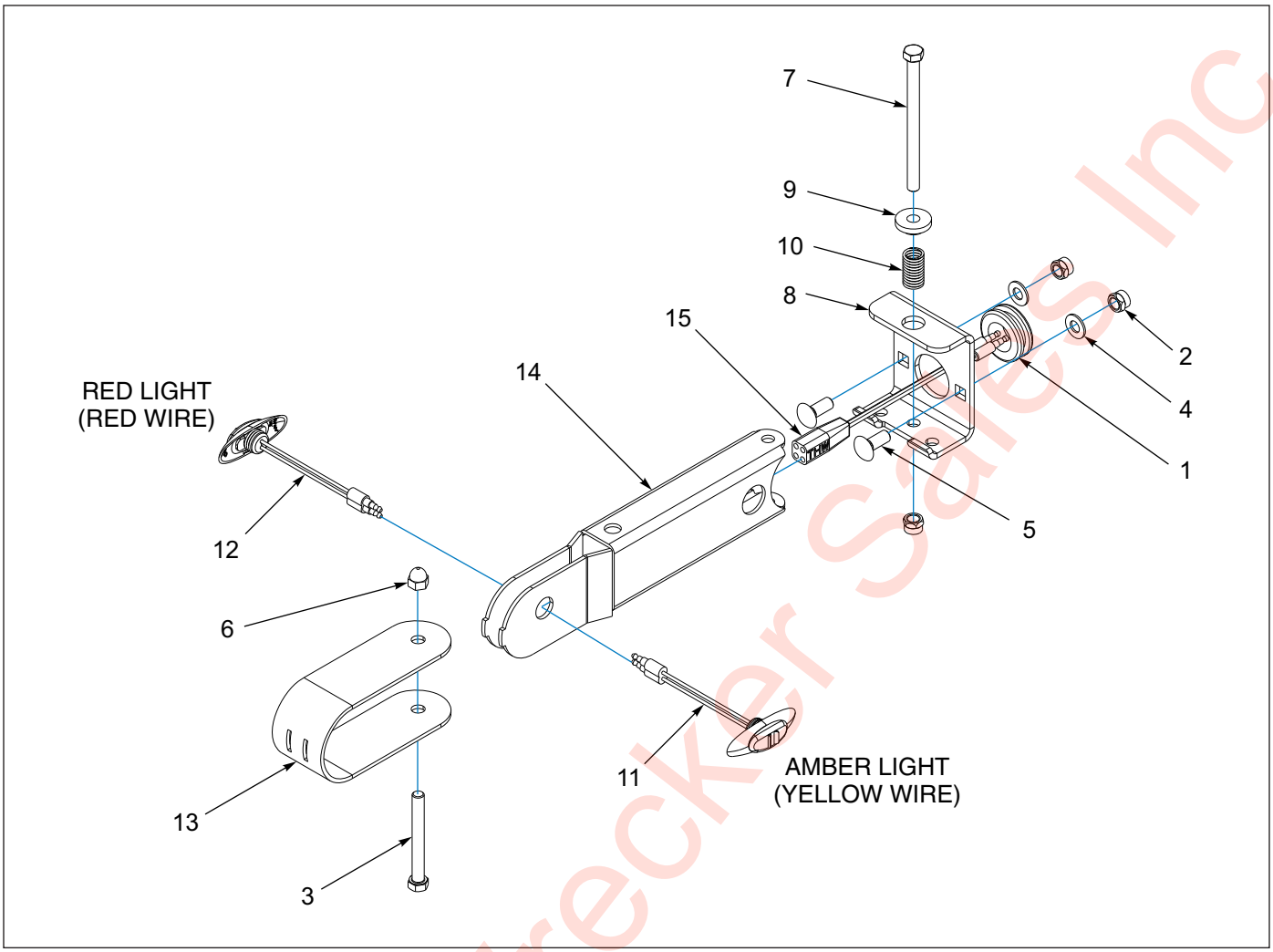

Figure 1-122: Swing-Arm Light Assembly - CURB

Swing-Arm Marker Light Assembly - CURB

ITEM	PART NUMBER	DESCRIPTION	QTY.
	191556	LIGHT ASSY,SWING-ARM MKR,CURB	
1	1-343-010007	GROMMET	1
2	1-512-010005-05	NUT, HEX, SLFLKG GRB 3/8-16	3
3	1-654-010051-14	SCREW HX CP 3/8-16UNCX3-1/4G5	1
4	1-861-010032-10	WASHER, FLAT 3/8" N ZP/CD	2
5	111276	SCREW RDHD SQNK 3/8-16X1 GR5	2
6	122154	NUT, HEX ACORN 3/8-16ZP	1
7	172882	SCREW HX CP 3/8-16UNCX5 GR5	1
8	176424	BRACKET MTG SWING-ARM LIGHT	1
9	176425	WASHER STEP	1
10	178389	SPRING, COMPRESSION SWINGARM	1
11	187863	LIGHT YEL LED.75CL/MK CLEAR CB	1
12	187864	LIGHT RED LED.75CL/MK CLEAR CB	1
13	191552	GUARD SWING-OUT LIGHT	1
14	191554	SWING-ARM WLDMT MARKER LIGHT	1
15	191568	HARNESS MARKER LAMP MICRONOVA	1

Eastern Wrecker Sales Inc

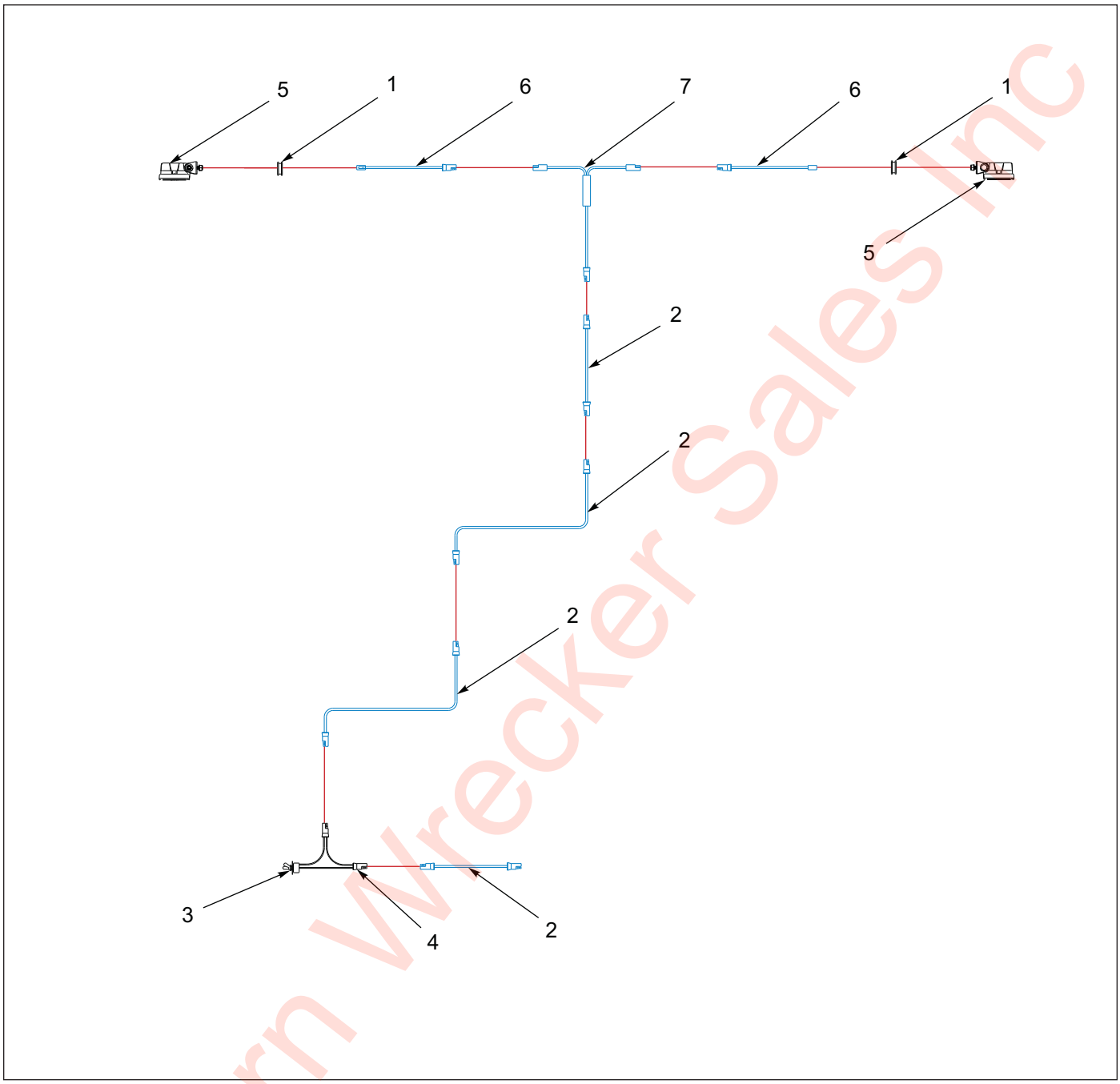

Figure 1-123: Winch Work Lights-191833

Winch Work Lights-191833

ITEM	PART NO.	DESCRIPTION	QTY.
--	191833	WINCH WORK LIGHT INSTALLATION	--
1	1-343-010011	GROMMET	2
2	3-368-010252	HARNESS ASSEMBLY, BULKHEAD LIGHT EXTENSION	4
3	81264	RUBBER BOOT FOR ELECT SWITCH	1
4	150117	TOGGLE SWITCH SEALED SPST	1
5	163996	LIGHT LED WHITE FLOOD LAMP	2
6	164052	HARNESS, 60” BRANCH WORK LIGHT	2
7	169853	HARNESS, JUMPER T-POWER	1

Eastern Wrecker Sales Inc

Pop-Up Roller Installation

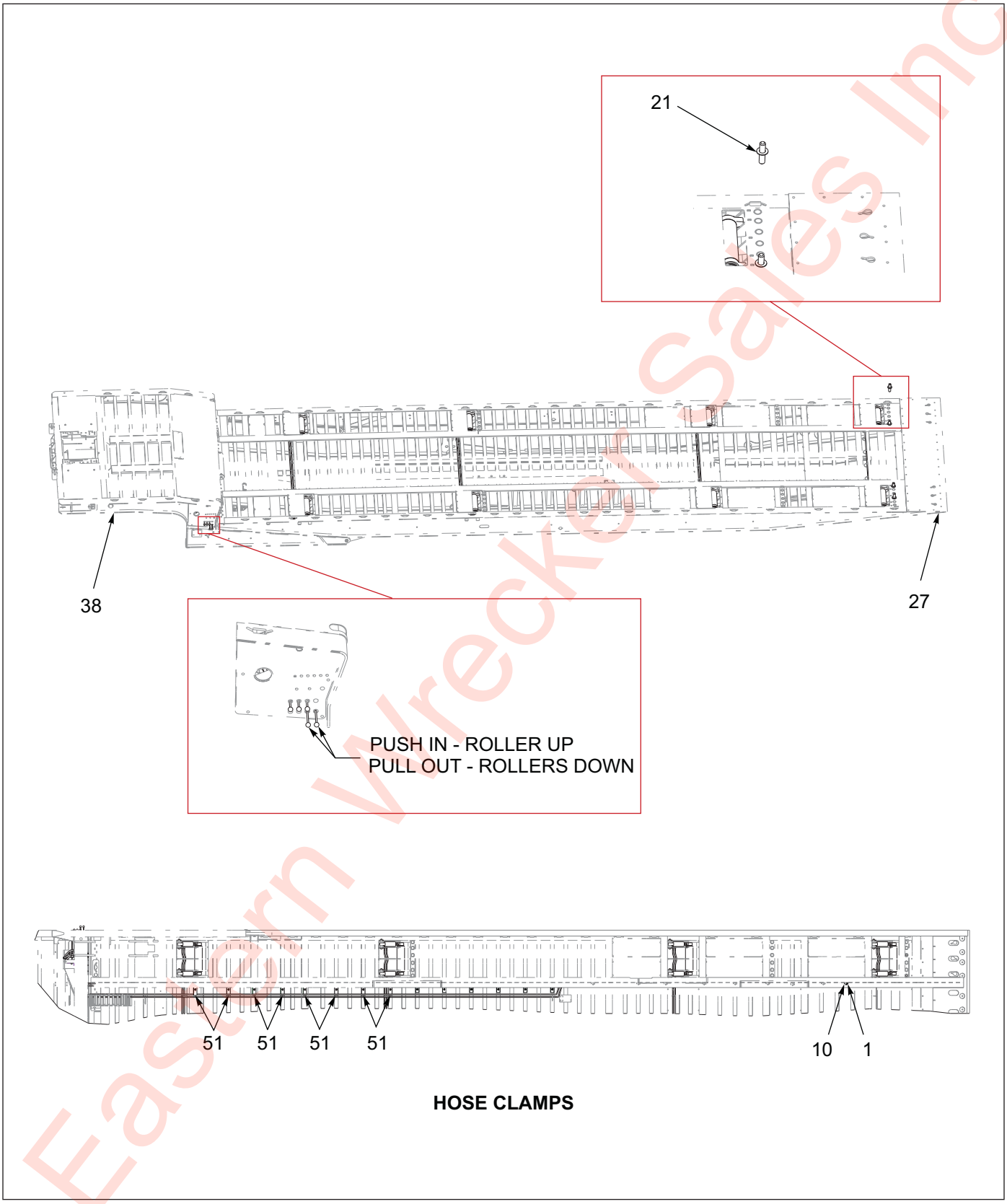

Figure 1-124: 8 Pop-Up Roller Installation (1 of 2)

Eastern Wrecker Sales Inc

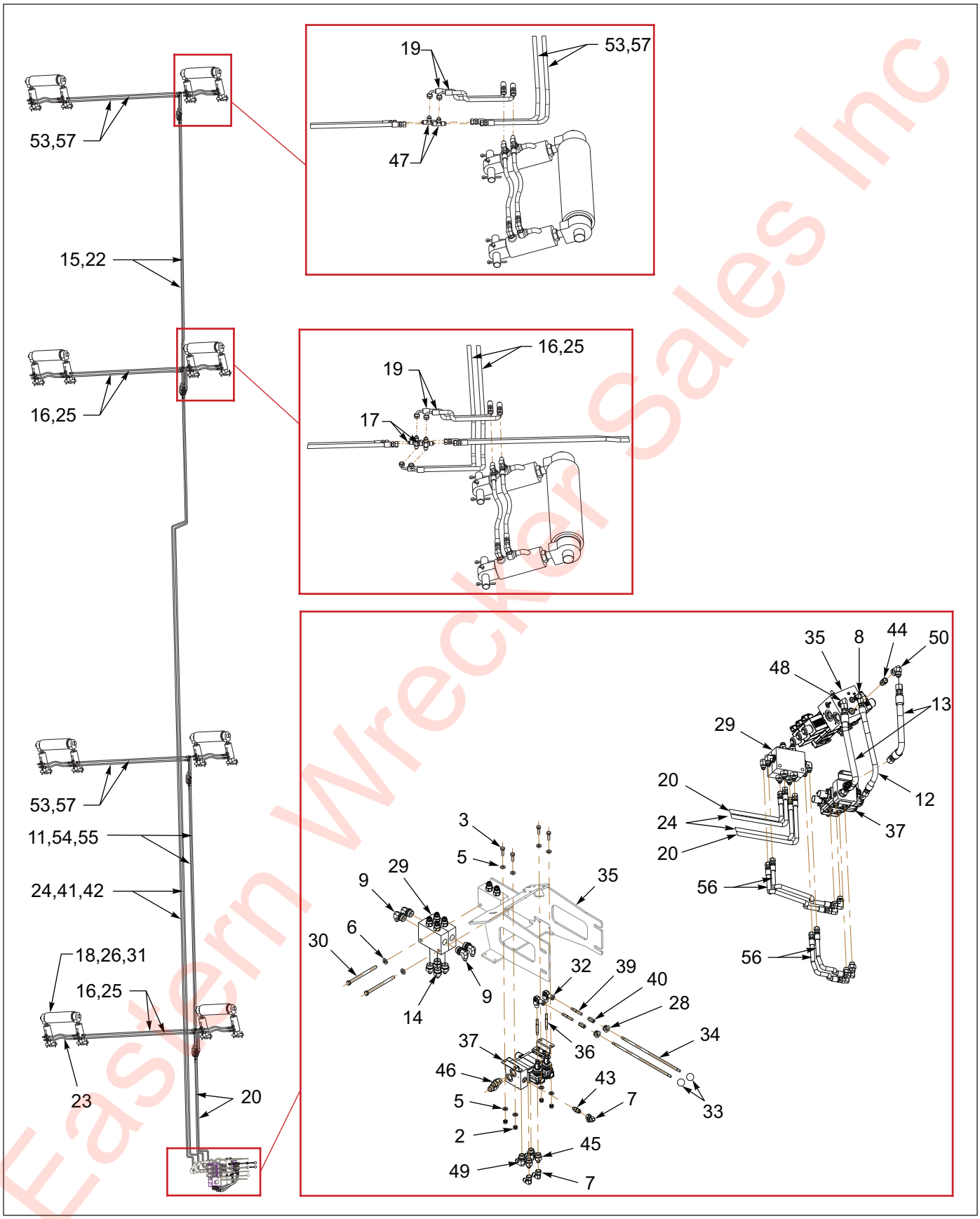

Figure 1-125: 8 Pop-Up Roller Installation (2 of 2)

Eastern Wrecker Sales Inc

8 Pop-Up Roller Installation

ITEM	PART NO.	DESCRIPTION	QTY.
	194467	ROLLER INSTL. (8) 400A-48-102 SB	- -
	194483	ROLLER INSTL. (8) 400A-48-108 SB BB	- -
	194499	ROLLER INSTL. (8) 400A-48-120 SB	- -
	190508	ROLLER INSTL. (8) 400A-50CA-102 SB BB	- -
	194508	ROLLER INSTL. (8) 400A-50CA-108 SB BB	- -
	194524	ROLLER INSTL. (8) 400A-50CA-120 SB	- -
	194540	ROLLER INSTL. (8) 400A-50-102 SB	- -
	194556	ROLLER INSTL. (8) 400A-50-108 SB BB	- -
	194572	ROLLER INSTL. (8) 400A-50-120 SB	- -
	190524	ROLLER INSTL. (8) 400A-53-102	- -
	189384	ROLLER INSTL. (8) 400A-53-102 SB 1” TRAVEL	- -
	190536	ROLLER INSTL. (8) 400A-53-108 SB BB	- -
	190548	ROLLER INSTL. (8) 400A-53-120 SB	- -
1	1-510-010001	NUT, 3/8-16 FLANGE LOCK	23
2	1-512-010005-03	NUT HEX SLFLKG GRB 5/16-18	4
3	1-654-010049-05	SCREW HX CP 5/16-18UNCX1 GR5	4
4	1-796-010003-02	TIE, STRAP, PLASTIC.18X14 **(NOT SHOWN)**	14
5	1-861-010032-08	WASHER,FLAT 5/16 ZP	8
6	1-861-010032-10	WASHER, FLAT 3/8” N ZP	2
7	102-0031	ADAPTER,90 JIC SWVL #6	3
8	102-1238	ADAPTER,90-#4 O-RING/#6 JIC	1
9	102-1333	FTG,90EL 06SAEM X 10	4
10	103817	CLAMP,HOSE 660 U/C	15
11	125648	HOSE ASSY 1/4X108,#6JICFEMALE **(USED ONLY W/ 194540, 194556, & 194572)**	2
12	130644	HOSE ASSY 3/8X16,9/16JIC ST	1
13	1422896	HOSE ASSY, 1/2 SAE 37, STR-STR	2
14	146707	ADAPTER,#10 O-RING #6 TUBE	4
15	149007	HOSE ASSY 1/4X#6JIC (2X) X156 **(USED ONLY W/ 190508, 194508, & 194524)**	2
16	149011	HOSE ASSY 1/4X72 #6JIC STR-90 **(USED ONLY W/ 194499, 194524, 194572, & 190548)**	4
17	149012	ADAPTER CROSS #6 JIC	4
18	169845	ROLLER SUB-ASSY POP-UP **(USED ONLY W/ 194483, 194508, 194556, & 190536)**	8
19	169848	HOSE ASSY 1/4X18 #6JIC STR-90	8
20	169849	HOSE ASSY 1/4X144 #6JIC STR	2
21	169865	PIN ALIGNMENT PEG	4
22	172980	HOSE ASSY, 1/4X125 #6 JIC STR	2
23	174265	HOSE HYD 1/4 X 21 - 6 STR	16
24	174266	HOSE HYD 1/4 X 446 -6 STR **(USED ONLY W/ 190524, 189384, 190536, & 190548)**	2
25	175029	HOSE ASSY, 1/4X52,#6JIC STR-90 **(USED ONLY W/ 194467, 194483, 190508, 194508, 194540, 194556, 190524, 189384, & 190536)**	4
26	175617	ROLLER SUB-ASSY POP-UP **(USED ONLY W/ 194467, 194499, 190508, 194524, 194540, 194572, 190524, & 190548)**	8
27	178400	FRAME MOD, 8 RLR 455-53-120 SB	- -
28	178444	BUSHING NYLON INSERT 9/16ID	2
29	184585	VALVE,DUAL COUNTER BALANCE,30G	2

Eastern Wrecker Sales Inc

8 Pop-Up Roller Installation

ITEM	PART NO.	DESCRIPTION	QTY.
30	185216	SCREW,HXCAP3/8-16UNCX5-1/4GR5	2
31	186861	ROLLER ASSY, POP-UP, 1” STOP **(USED ONLY W/ 189384)**	8
32	186875	CLEVIS JOINT,ROD ENDS M8.1.25	2
33	186877	KNOB,1” ROUND,M8X1.25 THD	2
34	186878	ROD HANDLE M8X1.25 ENDS	2
35	186886	VALVE ASSY, 3 SP, 35 GPM, SOLE **(SEE PAGE 1-28)**	- -
36	186902	STUD M8X1.25X65MM,DBL THD	2
37	189260	VALVE, 2 SPOOL, MOTOR, MANUAL ***(INCLUDES 186877 & 186878)*** **(SEE PAGE 1-167)**	1
38	192160	FRAME ASSY, 400A-120 G/N	- -
39	193910	STUD M8-1.25X50MM DBLE THD	2
40	193911	COUPLING NUT,M8-1.25X24MM ZINC	2
41	194724	HOSE ASSY 1/4X386 #6 JIC 2X **(USED ONLY W/ 194467, 194483, 194499, 190508, 194508, & 194524)**	2
42	194725	HOSE ASSY 1/4X399 #6 JIC 2X **(USED ONLY W/ 194540, 194556, & 194572)**	2
43	202702-4-6S	ADAPTER, #4 O-RING TO #6 JIC	1
44	202702-6-8S	ADAPTER, #6 SAE X #8 JIC	1
45	202702-8-6S	ADAPTER #8 O-RING TO #6 TUBE	2
46	202702-8-8S	ADAPTER #8 O-RING TO #8 TUBE	2
47	2033-6-6S	ADAPTER, TEE, #6 TUBE	4
48	2062-6-8S	ADAPTER 90" 562 O-RING-.75JIC	1
49	2062-8-6S	ELBOW,90,#8 SAE X #6 JIC	2
50	2071-8-8S	ADAPTER90 #8 FLR SWIVEL #8JIC	1
51	3-181-010006	HOSE CLAMP 350	8
52	1-822-010001	TRIM 1350 3/8 BLK FINE PEBBLE	3
53	71500166	HOSE,.25 X 52 IN. **(USED ONLY W/ 194467, 194483, 190508, 194508, 194540, 194556, 190524, 189384, & 190536)**	4
54	71508981	HOSE ASSY 1/4 #6 JIC (2X) 130 **(USED ONLY W/ 190508, 194508, 194524, 190524, 189384, 190536, & 190548)**	2
55	71509124	HOSE ASSY 1/4 #6 JIC (2X) 116 **(USED ONLY W/ 194467, 194483, & 194499)**	2
56	71509125	HOSE ASSY, 1/4, #6 JIC 30"	4
57	7779-72	HOSE HYD 1/4 X 72 **(USED ONLY W/ 194499, 194524, 194572, & 190548)**	4

Eastern Weeder Sales Inc

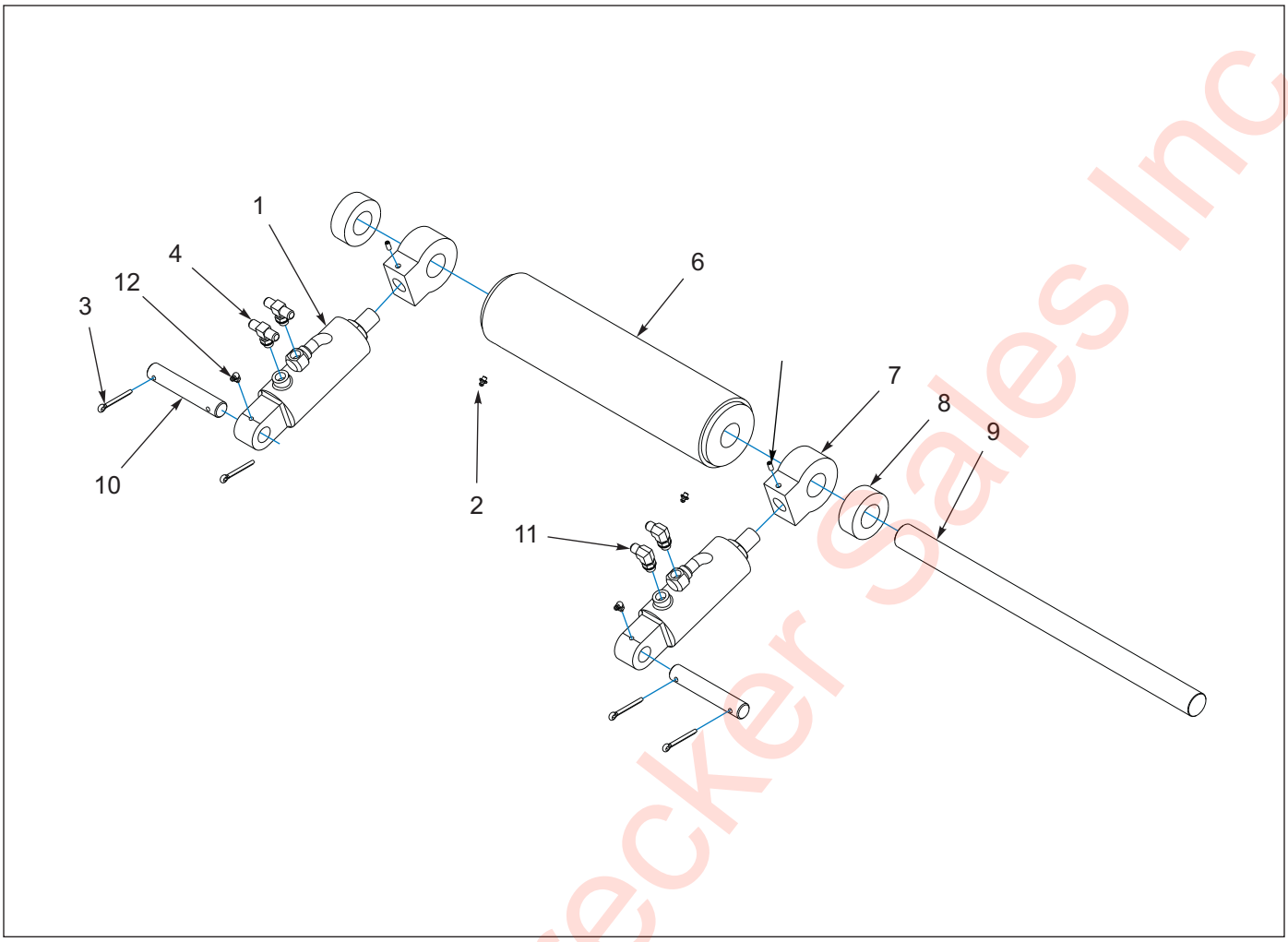

Figure 1-126: Pop-Up Roller Installation

Pop-Up Roller Installation

ITEM	PART NO.	DESCRIPTION	QTY.	
	169845	POP-UP ROLLER INSTALLATION	- -	
	175617	POP-UP ROLLER INSTALLATION		- -
1	0047008	CYLINDER, TILT	2	2
2	1-298-010001-1	FITTING, GREASE STR SHORT 1/4-28	2	2
3	1-557-010362-63	PIN, COTTER 1/4 X 2	4	4
4	102-1089	ADAPTER, 90	2	2
5	107464	SCREW, SET HEX SOCKET 1/4-28 X 5/8	2	2
6	187787	ROLLER WELDMENT, HDPU, 18-3/4	1	--
6	187790	ROLLER WELDMENT, HD PU 15-3/4	--	1
7	169255	END CYLINDER, ROLLER PIN	2	2
8	169258	ROLLER, TRACK HYDRAULIC DECK ROLLER	2	2
9	169836	SHAFT, ROLLER POP-UP **(24-7/16")**	1	--
9	175620	SHAFT, ROLLER POP-UP **(21-7/16")**	--	1
10	2-557-010054	PIN, EXTENDED CYLINDER	2	2
11	2062-6-6S	ADAPTER, 90	2	2
12	5410	FITTING, GREASE 1/4-28 90	2	2

Eastern Wrecker Sales Inc

Table provided for general use.

NOTES:

Eastern Wrecker Sales Inc

Scale-Options

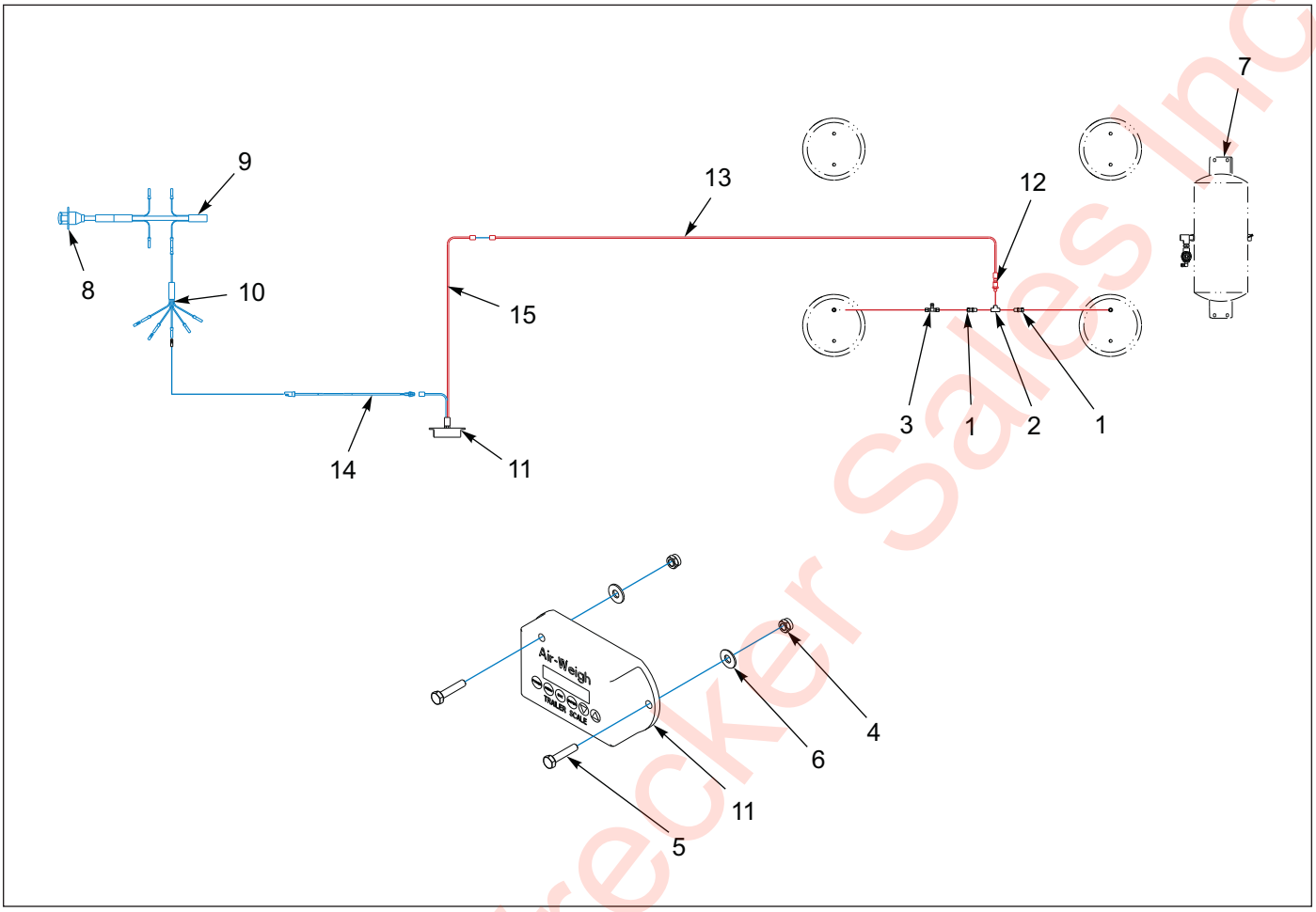

Figure 1-127: LOADMAXX-166821

Loadmaxx-166821

ITEM	PART NO.	DESCRIPTION	QTY.
--	166821	SCALE INSTALLATION, LOADMAXX SYSTEM	--
1	1-297-010007-11	FITTING AIR	2
2	1-297-010009-02	FITTING, AIR PIPE TEE	1
3	1-297-010010-04	FITTING AIR UNION TEE	--
4	1-512-010005-01	NUT HEX LOCK 1/4-20 GRB	--
5	1-654-010047-07	SCREW, HEX HEAD CAP 1/4-20 X 1-1/4 GR5	--
6	1-861-010032-07	WASHER, FLAT 1/4	--
7	-----	SUSPENSION, AIR RLU A/R	--
8	143100	HARNESS, 7 WAY RECEPTACLE	--
9	143101	HARNESS, FRONT MAIN	--
10	150093	HARNESS, 5 AUXILIARY BRANCHES	--
11	172437	SCALE, AIR DIGITAL MODIFIED **(ITEMS 12-15)**	1
12	149543	SENSOR ASSEMBLY, 5V 3/8” BRASS	1
13	184393	HARNESS MODIFIED 166002	1
14	166002	CABLE, AW5800 TRAILER POWER BLUNT CUT 15'	1
15	142895	CABLE, AW5800, TRAILER SCALE INTERFACE 2"	1

Eastern Wrecker Sales Inc

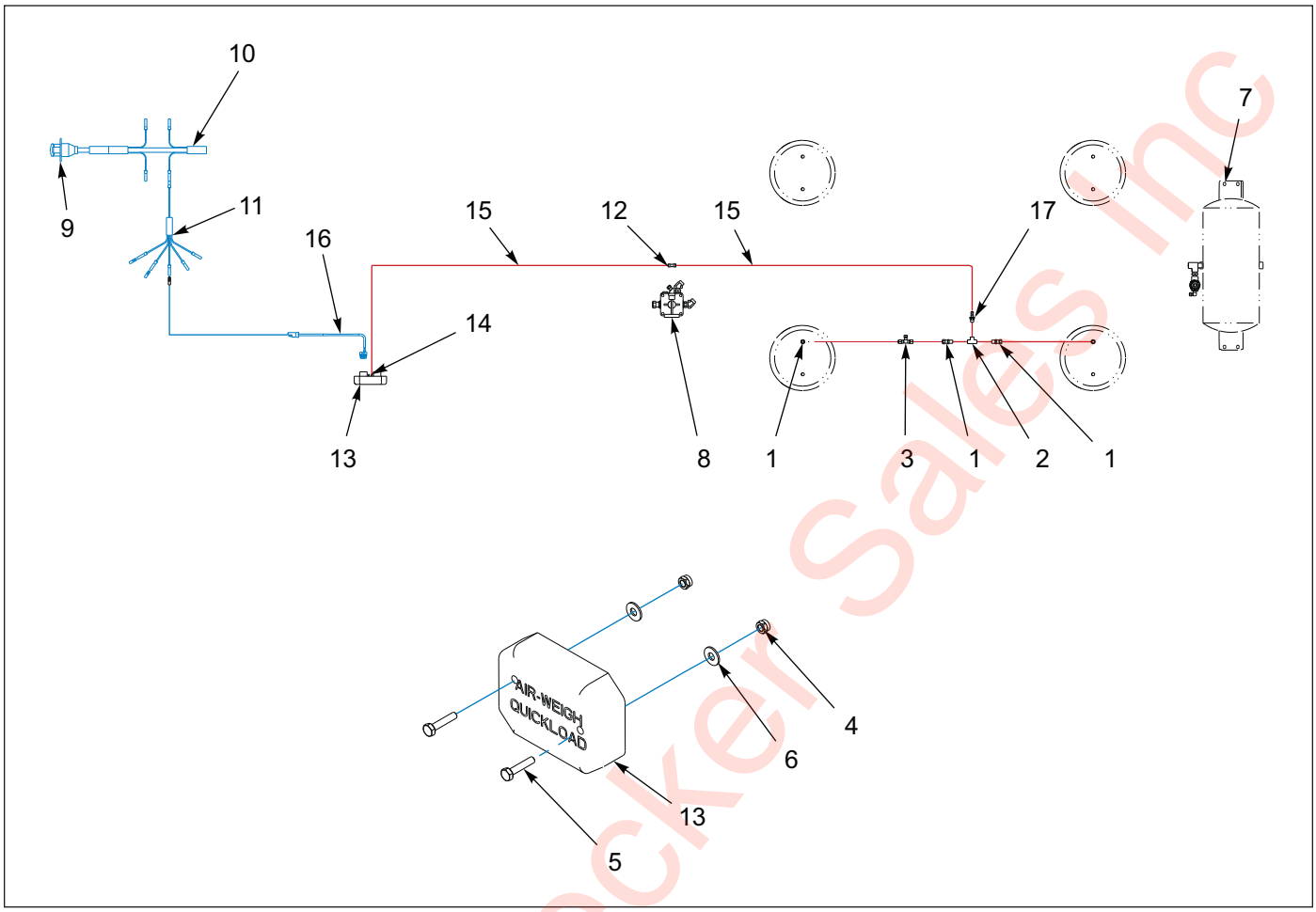

Figure 1-128: QUICKLOAD-175358 (Replaced by 226657, 226661)

Quickload-175358 (Replace By 226657,226661)

ITEM	PART NO.	DESCRIPTION	QTY.
--	175358	SCALE INSTALLATION, QUICKLOAD SYSTEM **(REPLACED BY 226657,226661)**	--
1	1-297-010007-11	FITTING AIR	2
2	1-297-010009-02	FITTING, AIR PIPE TEE	1
3	1-297-010010-04	FITTING AIR UNION TEE	--
4	1-512-010005-01	NUT HEX LOCK 1/4-20 GRB	--
5	1-654-010047-07	SCREW, HEX HEAD CAP 1/4-20 X 1-1/4 GR5	--
6	1-861-010032-07	WASHER, FLAT 1/4	--
7	-----	SUSPENSION, AIR RLU A/R	--
8	141607	AIR BOOSTER VALVE ASSEMBLY **(SEE PAGE 1-25)**	--
9	143100	HARNESS, 7 WAY RECEPTACLE	--
10	143101	HARNESS, FRONT MAIN	--
11	150093	HARNESS, 5 AUXILIARY BRANCHES	--
12	175359	UNION, AIR HOSE	1
13	175360	SCALE, AIR QL ,TRAVEL AXLE MODIFIED (**ITEMS 14-17)**	1
14	175363	SPRING HOSE CLAMP	1
15	175365	AIR LINE	1
16	184392	CABLE, TRAILER, POWER, BLUNT CUT, 15’	1
17	180221	HOSE BARB FITTING, BRASS	1

Eastern Wrecker Sales Inc

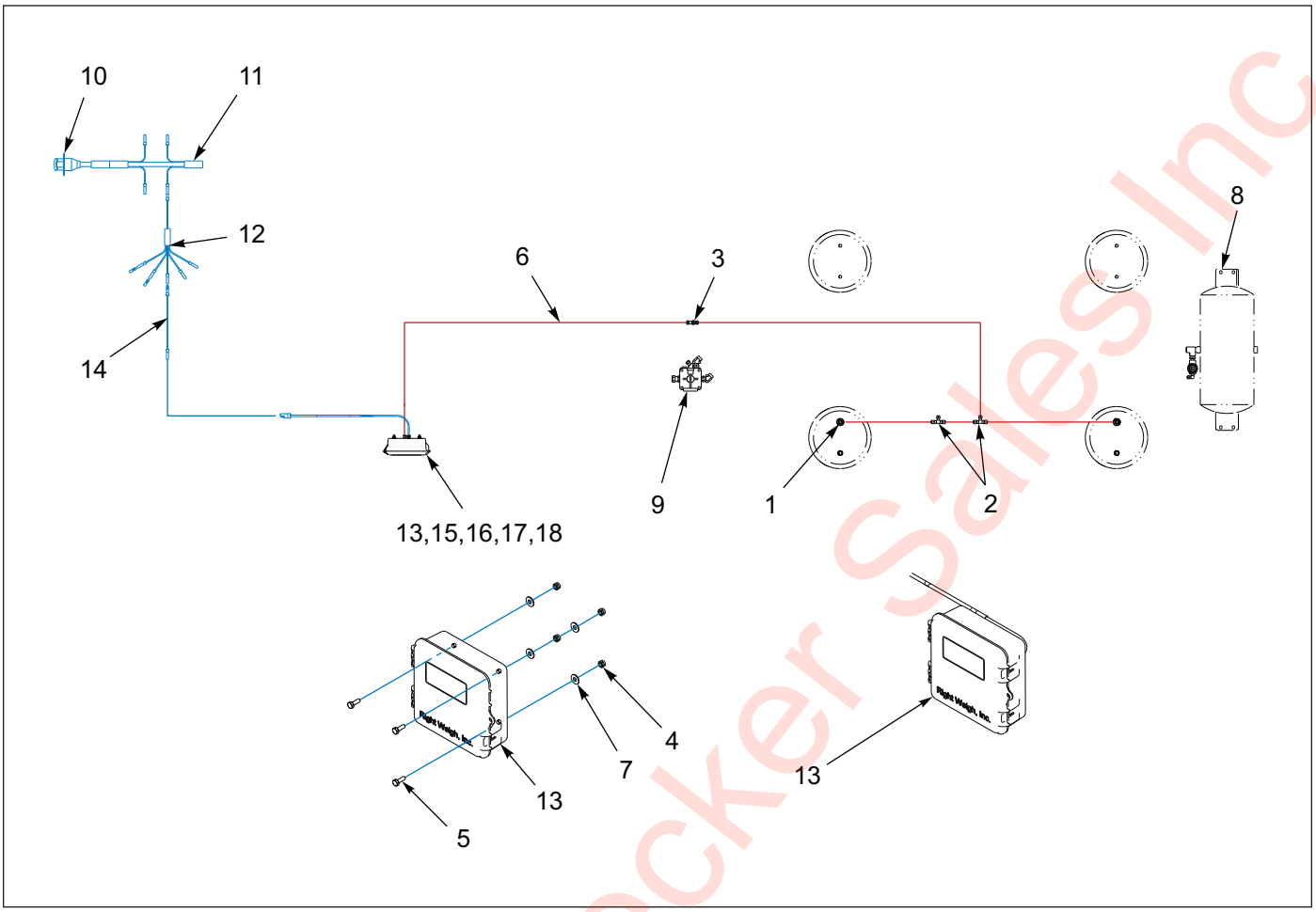

Figure 1-129: Right Weigh

Right Weigh

ITEM	PART NO.	DESCRIPTION	QTY.
--	170470	SCALE INSTALLATION, RIGHT WEIGH SYSTEM	--
--	205742	SCALE INSTALLATION, RIGHT WEIGH SYSTEM W/ BLUETOOTH	--
1	1-297-010007-11	FITTING AIR	2
2	1-297-010010-04	FITTING AIR UNION TEE	--
3	1-297-010014-02	FITTING, AIR	1
4	1-512-010005-01	NUT HEX LOCK 1/4-20 GRB	--
5	1-654-010047-04	SCREW, HEX HEAD CAP 1/4-20 X 3/4 GR5	24
6	1-833-010001	TUBING NYLON 1/4 OD	--
7	1-861-010032-07	WASHER, FLAT 1/4	--
8	-----	SUSPENSION, AIR RLU A/R	--
9	141607	AIR BOOSTER VALVE ASSEMBLY **(SEE PAGE 1-25)**	--
10	143100	HARNESS, 7 WAY RECEPTACLE	--
11	143101	HARNESS, FRONT MAIN	--
12	150093	HARNESS, 5 AUXILIARY BRANCHES	--
13	170471	HARNESS ASSEMBLY, RIGHT WEIGH **(USED W/ 170470)**	1
13	205744	HARNESS ASSEMBLY, RIGHT WEIGH **(USED W/ 205742)**	1
14	3-368-010252	HARNESS ASSEMBLY, BULKHEAD LIGHT EXT	1
15	171159	DIGITAL SCALE (**USED W/ 170470)**	1

Eastern Wrecker Sales Inc

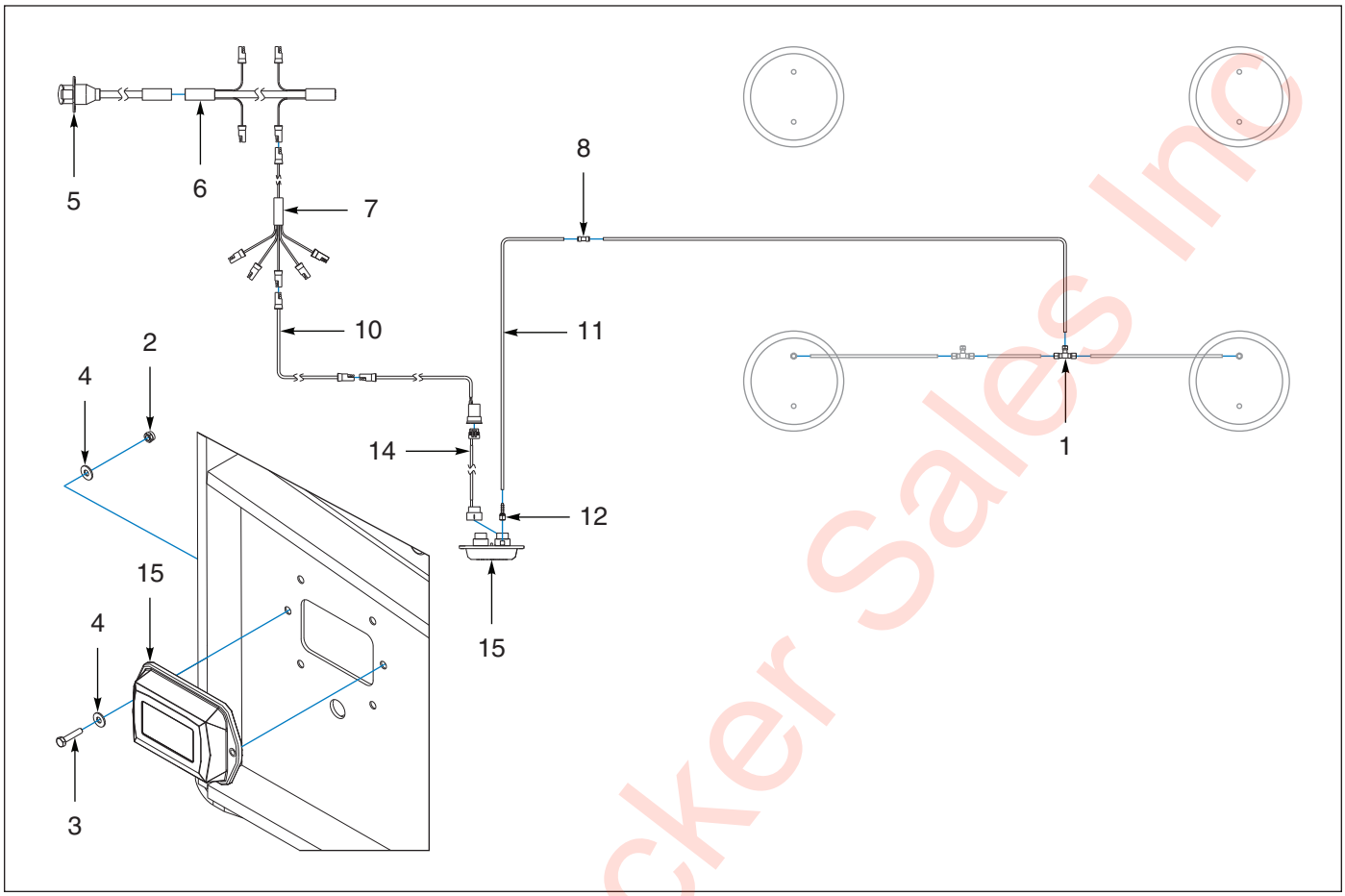

Figure 1-130: QUICKLOAD PLUS-226657 (After 03/31/2020)

Quickload Plus-226657 (After 03/31/2020)

ITEM	PART NUMBER	DESCRIPTION	QTY
--	226657	QUICKLOAD PLUS TRAV AX INSTL **(AFTER 03/31/2020 REPLACES 175358)**	--
--	103082	SUSP,AIR RLU A/R TANDEM 660	--
1	1-297-010010-04	FITTING,AIR,UN/TEE3/8X3/8X1/4	1
2	1-512-010005-01	NUT,HEX,SLFLKG GRB 1/4-20	2
3	1-654-010047-07	SCREW,HX CP 1/4-20UNCX1-1/4G5	2
4	1-861-010032-07	WASHER,FLAT 1/4 ZP	4
5	143100	HARNESS 7WAY RECP GROTE	1
6	143101	HARNESS FRONT MAIN GROTE	1
7	150093	HARNESS 5 AUX BRANCHES GROTE	1
8	175359	UNION AIR HOSE 1/4 O.D. POLY	1
9	226656	QUICKLOAD PLUS TRAV AXLE KIT **(INCLUDES ITEMS 10-16)**	--
10	175364	CABLE, POWER, GROTE CONN, LM	1
11	175365	AIR LINE 1/4 OD POLY **(BY THE FOOT)**	50
12	212216	BRASS FITTING 1/4 NPT 1/4 BARB	1
13	226650	BRASS T 1/4NPT AIR WEIGH **(NOT SHOWN)**	1
14	226651	POWER CABLE 3.5FT AIR WEIGH	1
15	226652	QUICKLOAD PLUS SCALE MODULE	1
16	226653	DECAL AIR WEIGH SCALE **(NOT SHOWN)**	1

Eastern Wrecker Sales Inc

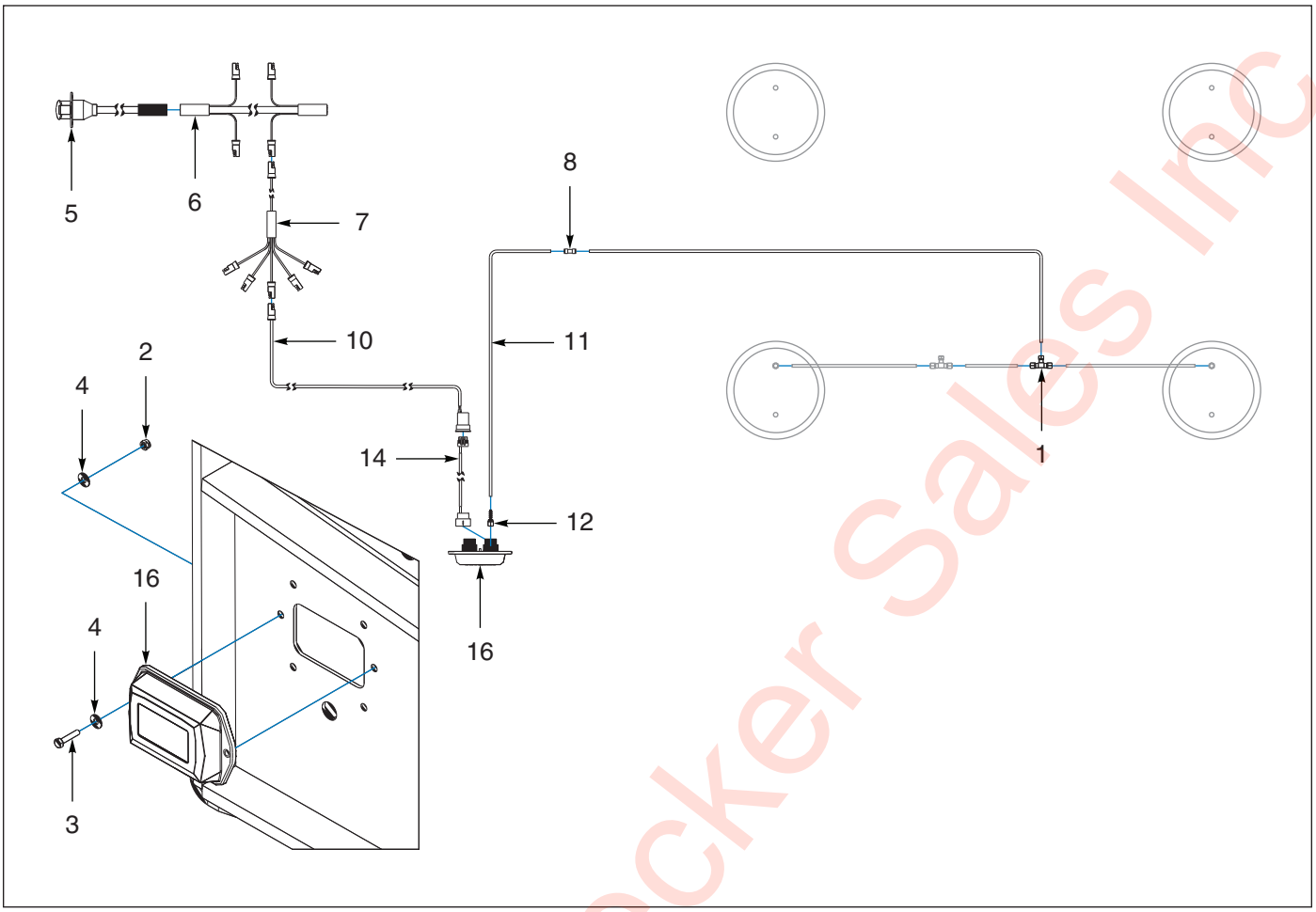

Figure 1-131: LOADMAXX PLUS-226661 (After 03/31/2020)

Loadmaxx Plus-226661 (After 03/31/2020)

ITEM	PART NUMBER	DESCRIPTION	QTY
--	226661	LOADMAXX PLUS TRAV AX INSTL **(REPLACES 175358 & 204675)**	--
--	103082	SUSP,AIR RLU A/R TANDEM 660	--
1	1-297-010010-04	FITTING,AIR,UN/TEE3/8X3/8X1/4	1
2	1-512-010005-01	NUT,HEX,SLFLKG GRB 1/4-20	2
3	1-654-010047-07	SCREW,HX CP 1/4-20UNCX1-1/4G5	2
4	1-861-010032-07	WASHER,FLAT 1/4 ZP	4
5	143100	HARNESS 7WAY RECP GROTE	1
6	143101	HARNESS FRONT MAIN GROTE	1
7	150093	HARNESS 5 AUX BRANCHES GROTE	1
8	175359	UNION AIR HOSE 1/4 O.D. POLY	1
9	226660	LOADMAXX PLUS TRAV AXLE KIT **(INCLUDES ITEMS 10-16)**	--
10	175364	CABLE, POWER, GROTE CONN, LM	1
11	175365	AIR LINE 1/4 OD POLY **BY THE FOOT)**	50
12	212216	BRASS FITTING 1/4 NPT 1/4 BARB	1
13	226650	BRASS T 1/4NPT AIR WEIGH **(NOT SHOWN)**	1
14	226651	POWER CABLE 3.5FT AIR WEIGH	1
15	226653	DECAL AIR WEIGH SCALE **(NOT SHOWN)**	1
16	226655	LOADMAXX PLUS SCALE MODULE	1

Eastern Wrecker Sales Inc

Table provided for general use.

NOTES:

Eastern Wrecker Sales Inc

Spare Tire Mount-Options

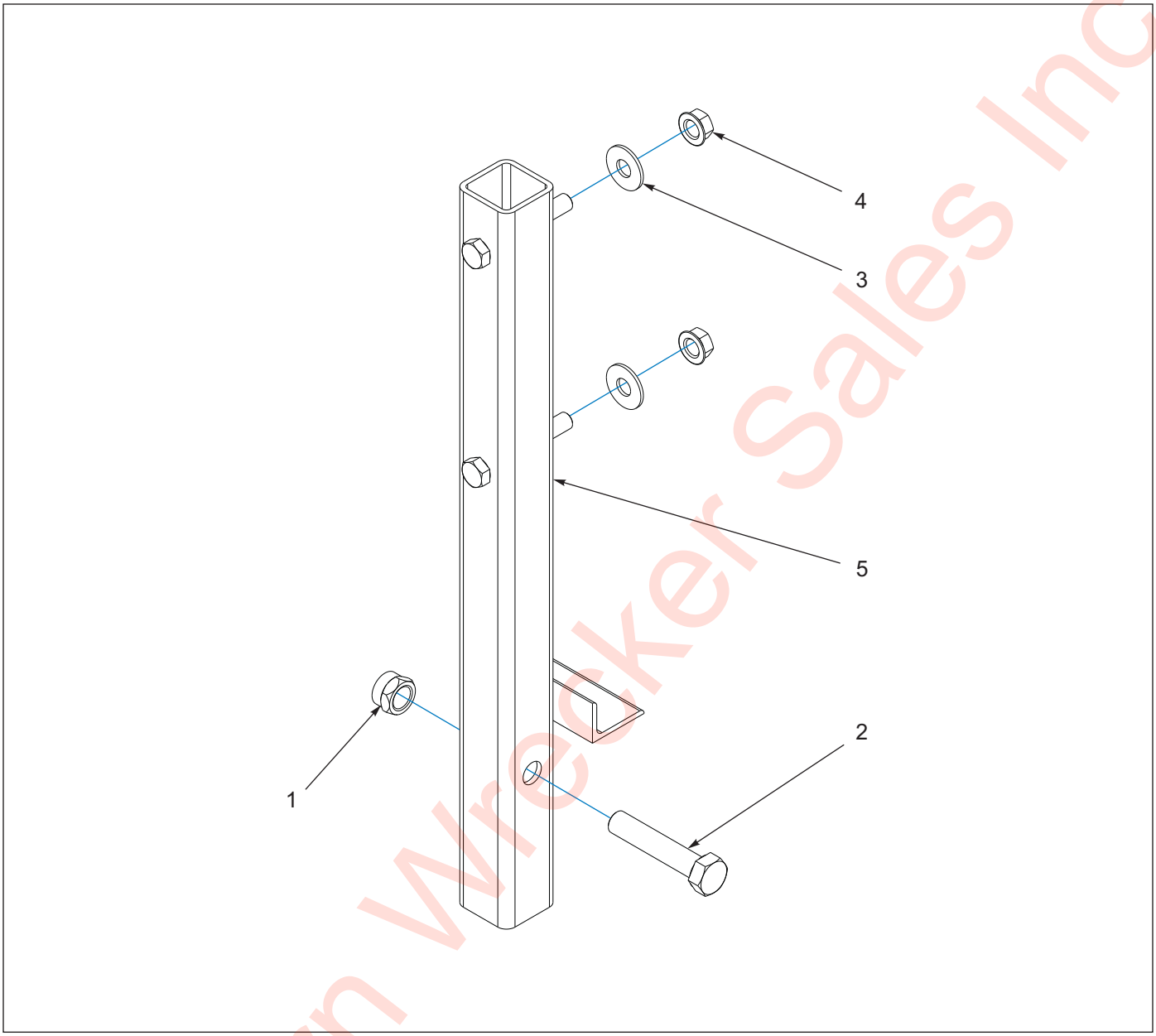

Figure 1-132: Spare Tire - Mount Assembly

Spare Tire-Post Mount Assembly

ITEM	PART NO.	DESCRIPTION	QTY.	
	130282	SPARE TIRE MOUNT ASSEMBLY	- -	
	169641	SPARE TIRE MOUNT ASSEMBLY, 255 TIRES		- -
1	1-512-010005-19	NUT, HEX LOCK 1-8 GRB	1	1
2	1-654-010065-15	SCREW, HEX HEAD CAP 1-8 X 5 GR5	1	1
3	1-861-010032-21	WASHER, FLAT, 3/4W	2	2
4	103841	NUT, FLANGE PREVAILING TORQUE 3/4-10	2	2
5	130280	MOUNT WELDMENT, SPARE TIRE	1	--
5	169639	MOUNT WELDMENT, SPARE TIRE, 255	--	1

Eastern Wrecker Sales Inc

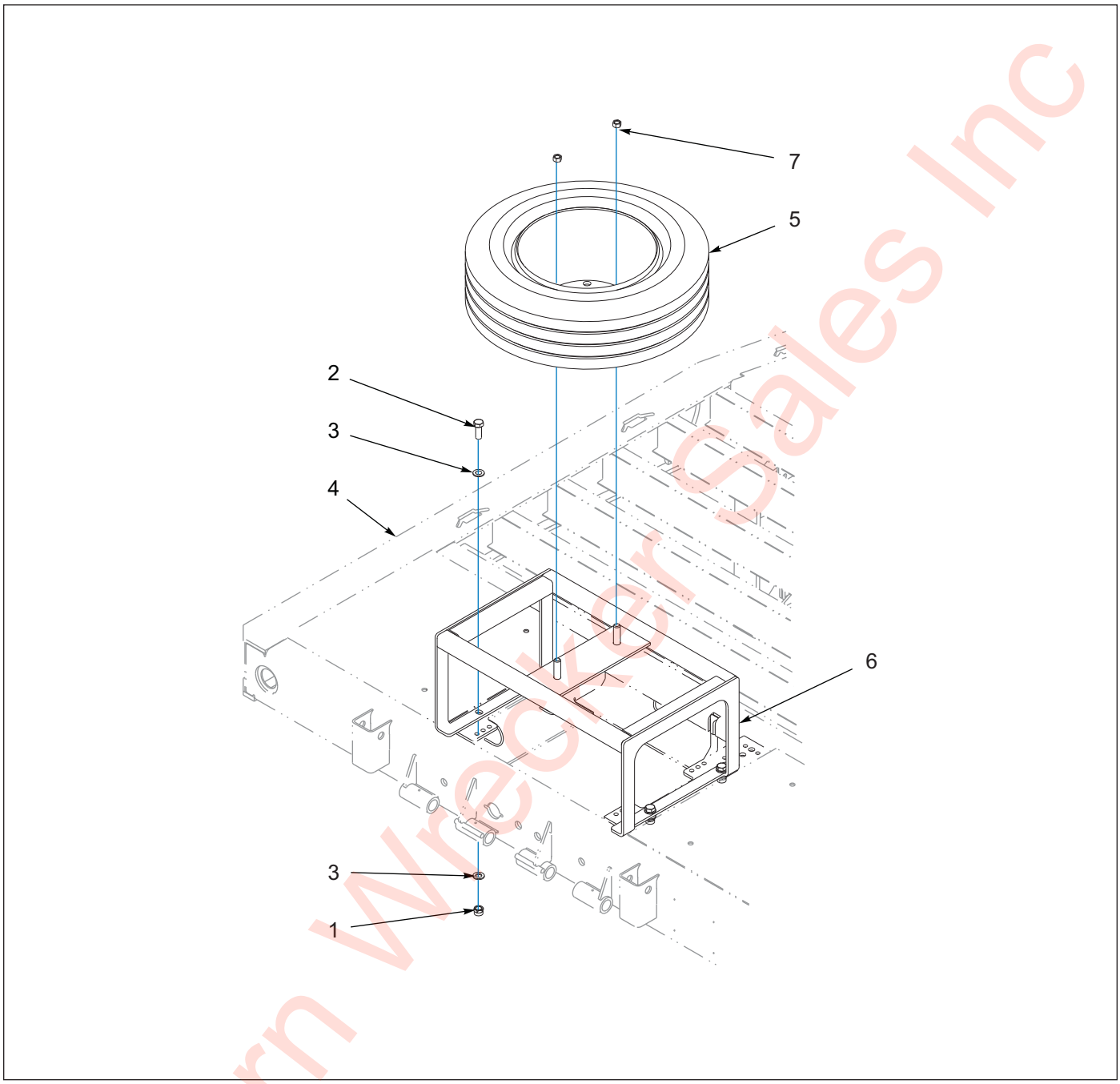

Figure 1-133: Spare Tire-Mount Horizontal Assembly -163790

Spare Tire-Mount Horizontal Assembly-163790

ITEM	PART NUMBER	DESCRIPTION	QTY.
--	163790	HORIZONTAL SPARE TIRE MOUNT ASSEMBLY	--
1	1-512-010005-15	NUT, HEX LOCK 3/4-10 GRB	4
2	1-654-010061-05	SCREW, HEX HEAD CAP 3/4-10 X 2 GR5	4
3	1-861-010032-20	WASHER, FLAT, 3/4N	2
4	-----	GOOSENECK WELDMENT	--
5	-----	TIRE ASSEMBLY	--
6	163791	MOUNT WELDMENT, HORIZONTAL SPARE TIRE	1
7	179933	NUT, HEX M22 X 1.5	2

Eastern Wrecker Sales Inc

Step-Options

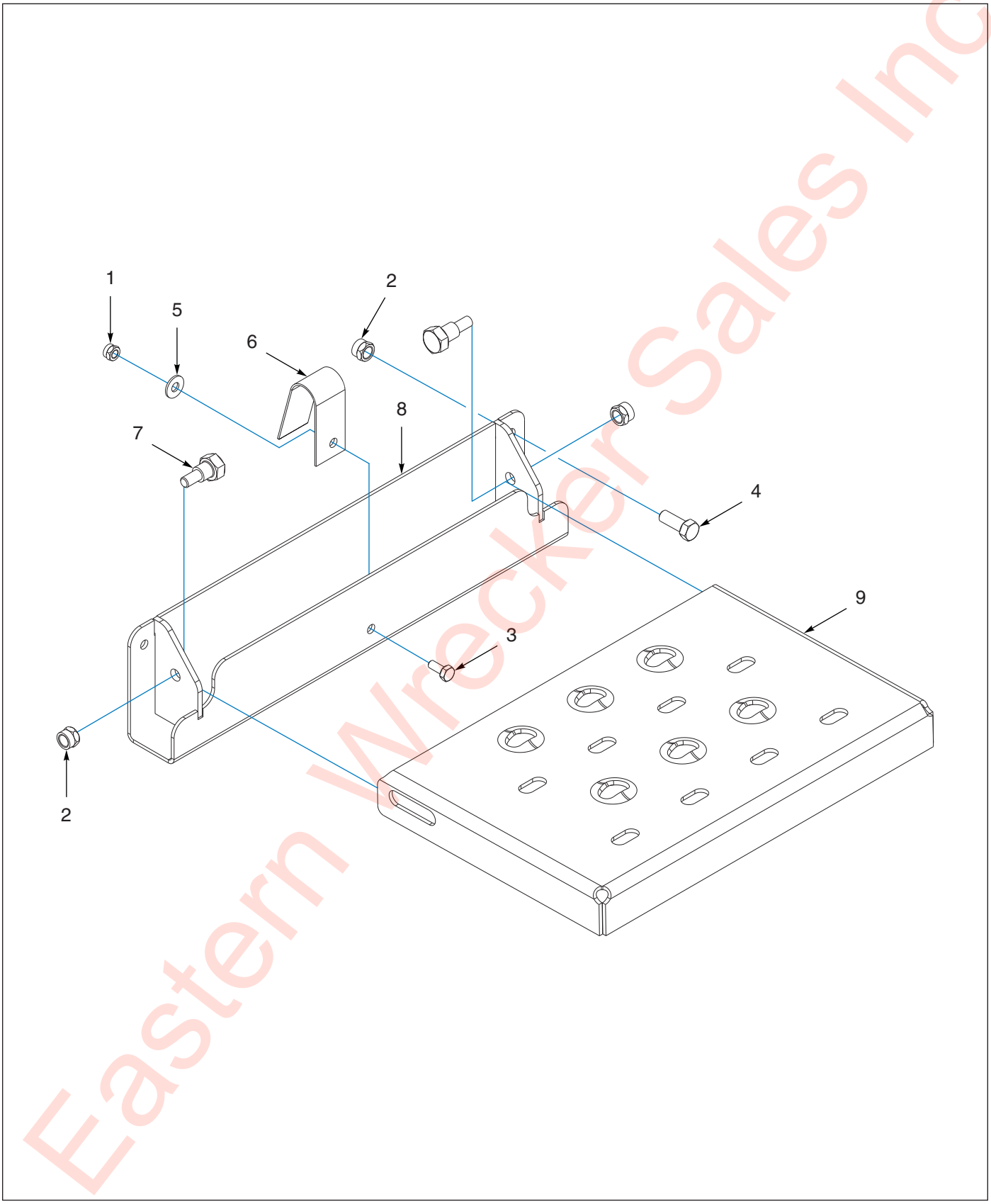

Figure 1-134: Step, Folding Assembly-189700

Eastern Wrecker Sales Inc

Step, Folding Assembly-189700

ITEM	PART NUMBER	DESCRIPTION	QTY
--	174061	STEP ASSY,FOLD UP, YELLOW	--
--	178393	STEP ASSY, FOLD UP, YELLOW (2 STEPS)	--
--	189699	STEP ASSY, FOLD UP, BLACK	--
--	216268	STEP ASSY, FOLD UP, GALV	--
1	1-512-010005-01	NUT,HEX,SLFLKG GRB 1/4-20 **(178393 REQ 2 EACH)**	1
2	1-512-010005-05	NUT, HEX, SLFLKG GRB 3/8-16 **(178393 REQ 8 EACH)**	4
3	1-654-010047-03	SCREW, HEX 1/4-20UNCX5/8 **(178393 REQ 2 EACH)**	1
4	1-654-010051-05	SCREW,HEX CAP 3/8-16UNCX1 GR5 **(178393 REQ 4 EACH)**	2
5	1-861-010032-07	WASHER,FLAT 1/4 ZP **(178393 REQ 2 EACH)**	1
6	174092	SPRING,STAY, FOLDING STEP **(178393 REQ 2 EACH)**	1
7	2-095-010017	BOLT, SHOULDER HEX HEAD **(178393 REQ 4 EACH)**	2
8	190556	ANCHOR, FOLDING STEP,BLACK **(189699)**	1
8	216267	ANCHOR, FOLDING STEP, GALV **(216268)**	1
8	220291	ANCHOR, FOLDING STEP,YELLOW **(174061) (178393 REQ 2 EACH)**	1
9	190557	STEP, FOLD UP BLACK **(189699)**	1
9	216266	STEP, FOLD UP, GALV **(216268)**	1
9	220292	STEP,FOLD UP,YELLOW **(174061) (178393 REQ 2 EACH)**	1

Eastern Wrecker Sales Inc

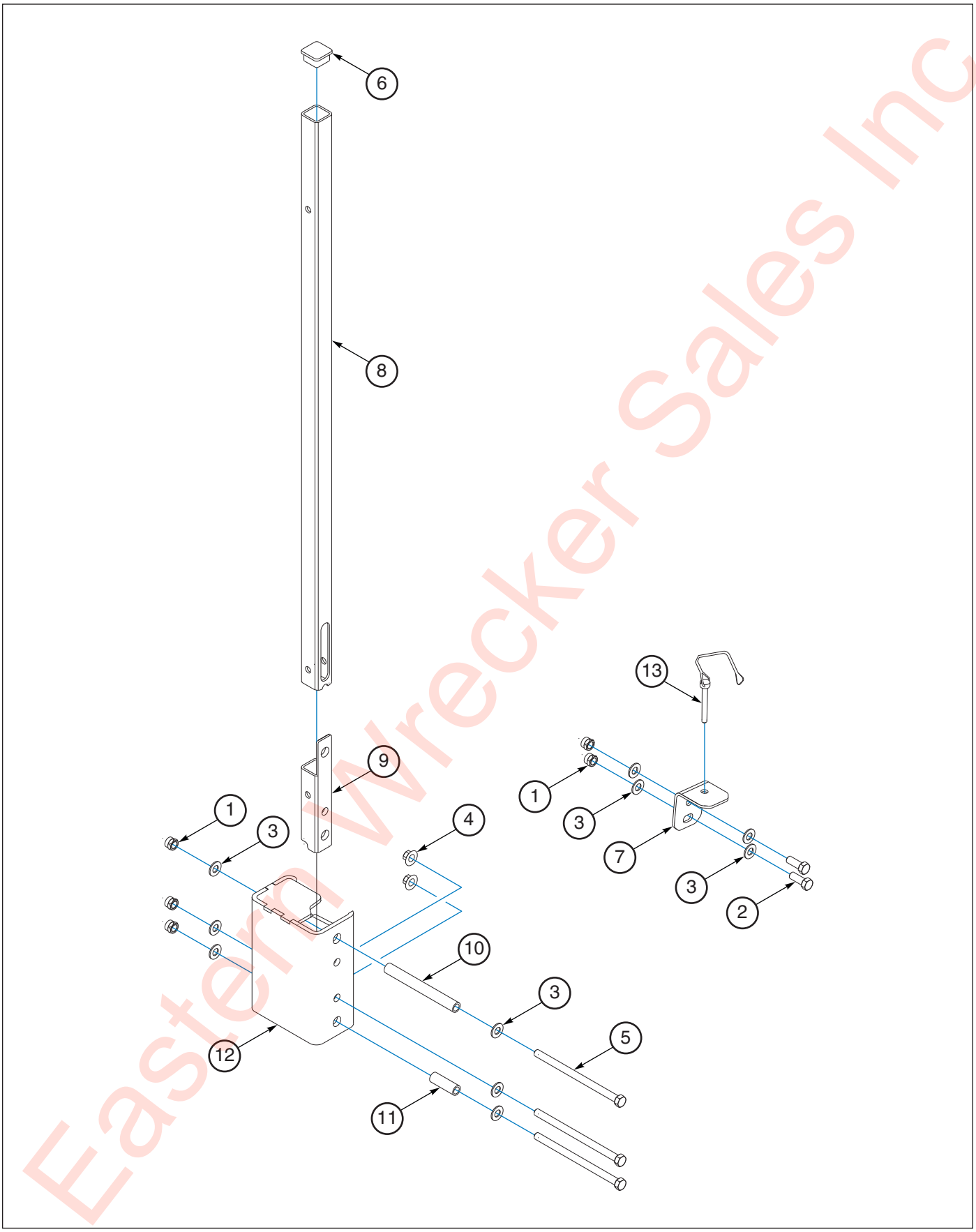

Eastern Wrecker Sales Inc

Figure 1-135: Step, Folding Handle Assembly-226645

Step, Folding Handle Assembly-226645

ITEM	PART NUMBER	DESCRIPTION	QTY
--	226645	ROTATE VERT HANDLE	--
1	1-512-010005-05	NUT, HEX, SLFLKG GRB 3/8-16	5
2	1-654-010051-05	SCREW,HEX CAP 3/8-16UNCX1 GR5	2
3	1-861-010032-10	WASHER, FLAT 3/8" N ZP/CD	10
4	107470	NUT,SPIRALOCK 3/8-16HX	2
5	109207	SCREW 3/8-16X6 HHCS FULLTHRD	3
6	208980	PLUG, SQR TUBE 1-1/4, 10-14 GA	1
7	223279	STEP HANDLE HOLD BRACKET	1
8	223282	STEP HANDLE TUBE	1
9	223283	STEP HANDLE INSERT TUBE	1
10	223285	SLIDE COLLAR	1
11	226635	HANDLE BASE SPACER	1
12	226644	HANDLE BASE WLDMT	1
13	226688	PIN, 5/16X1-3/4, ROUND LOCKING	1

Eastern Wrecker Sales Inc

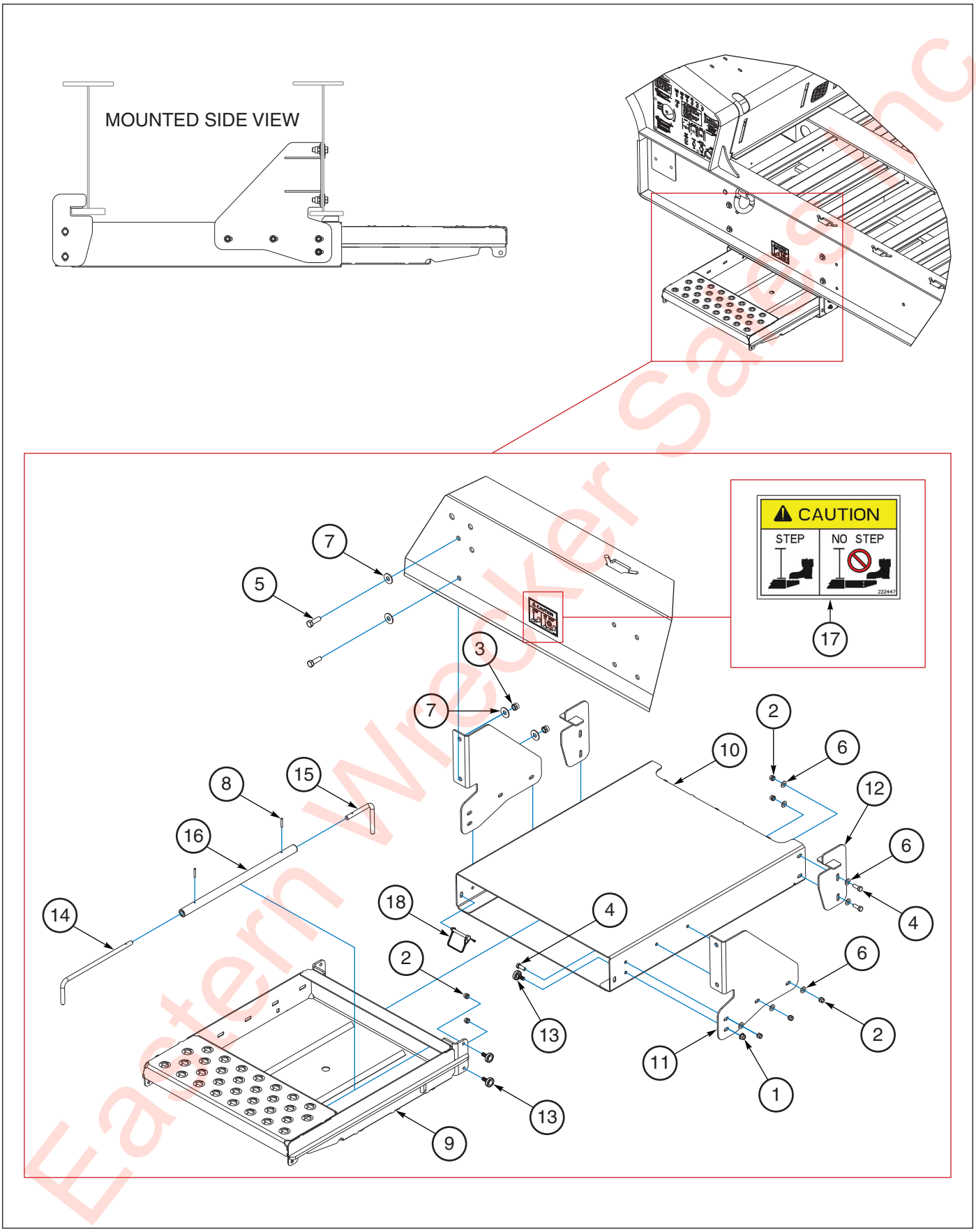

Figure 1-136: Step, Drawer Retractable Assembly-222445

Eastern Wrecker Sales Inc

Step, Drawer Retractable Assembly-222445

ITEM	PART NUMBER	DESCRIPTION	QTY
1	1-510-010001	NUT, 3/8-16 UNC FLANGE LOCK	2
2	1-512-010005-05	NUT, HEX, SLFLKG GRB 3/8-16	14
3	1-512-010005-09	NUT,HEX,SLFLKG, 1/2-13 GRB	4
4	1-654-010051-05	SCREW,HEX CAP 3/8-16UNCX1 GR5	10
5	1-654-010055-03	SCREW,HEX CAP,1/2-13UNCX1-1/2	4
6	1-861-010032-10	WASHER, FLAT 3/8" N ZP/CD	14
7	1-861-010032-15	WASHER, FLAT 1/2 W ZP/CD	8
8	172804	PIN SPRING SLOTTED 3/16X1-1/4	2
9	222440	STEP/DRAWER STORAGE YELLOW	1
9	222441	GALV OF 221640 (STP/DRWR STRG)	1
10	222442	HOUSING STEP/DRAWER BLACK	1
10	222443	GALV OF 221645 (STP/DRWR HSG)	1
11	222436	HANGER FRONT STEP/DRAWER BLACK	2
11	222437	GALV OF 221652 (STP/DRWR HGR)	2
12	222438	HANGER REAR STEP/DRAWER BLACK	1
12	222439	GALV OF 222434 (STP/DRWR HGR)	1
13	221642	CAM FOLLOWER 1.18" DIA 540LB	6
14	221648	PIN STEP/DRAWER FRONT HANDLE	1
15	221649	PIN STEP/DRAWER REAR STOP	1
16	221650	TUBE STEP/DRAWER STOP CONN	1
17	222447	DECAL CAUTION NO STEP STP/DRWR	1
18	516-22PTL	RETAINING PIN MUD FLAP	2

Eastern Wrecker Sales Inc

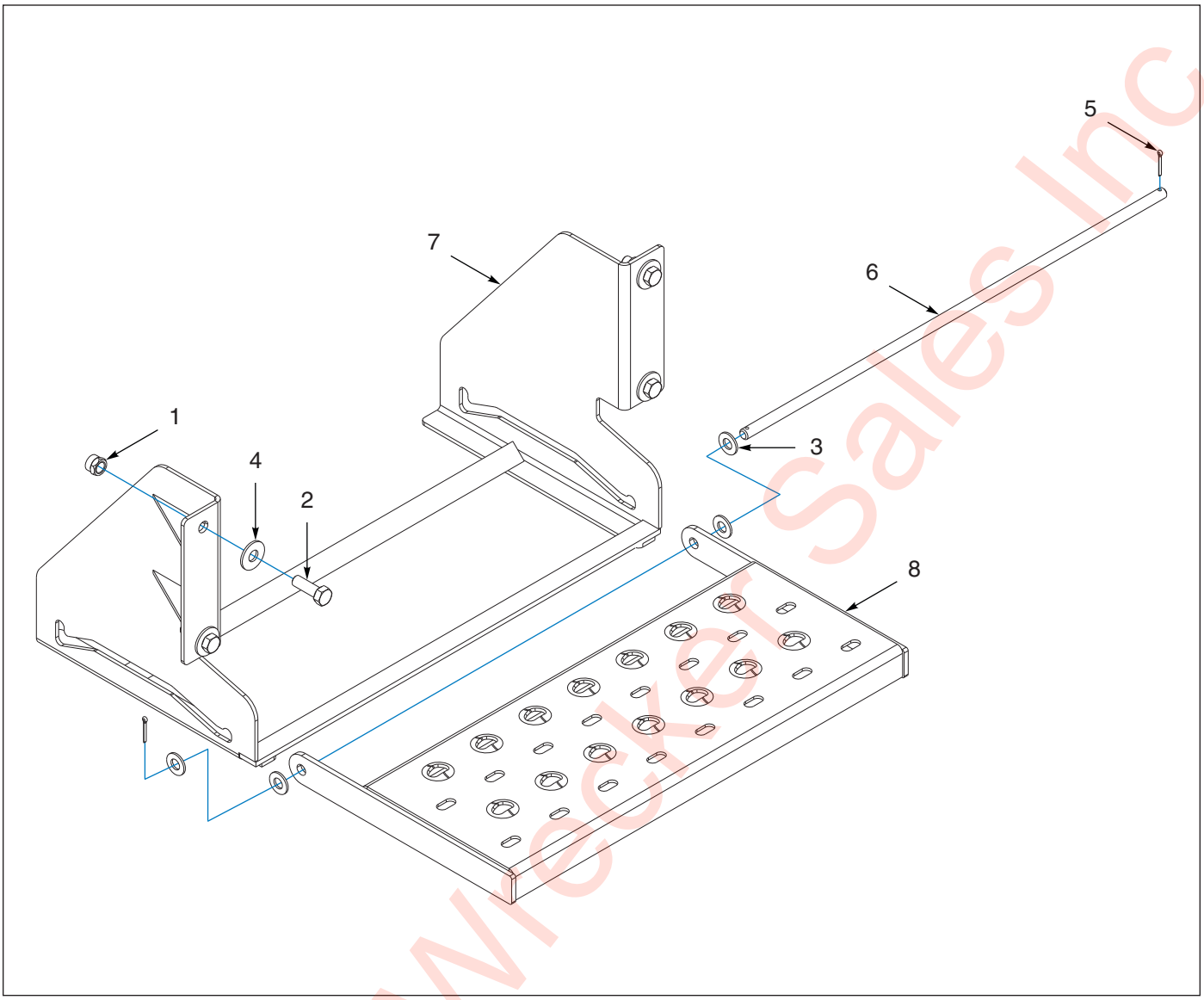

Figure 1-137: Step, Retractable Assembly-2162272

Step, Retractable Assembly-216272

ITEM	PART NUMBER	DESCRIPTION	QTY
--	175632	STEP ASSY,RETRACTABLE,YELLOW	--
--	216271	STEP ASSY, RETRACTABLE GALV	--
1	1-512-010005-09	NUT,HEX,SLFLKG, 1/2-13 GRB	4
2	1-654-010055-03	SCREW,HEX CAP,1/2-13UNCX1-1/2	4
3	1-861-010032-14	WASHER, FLAT 1/2" N ZP/CD	4
4	1-861-010032-15	WASHER, FLAT 1/2 W ZP/CD	4
5	101386	PIN, COTTER, 1/8X1	2
6	175625	PIN,SLIDING, RETRACTABLE STEP	1
7	216269	MOUNT,RETRACTABLE STEP, GALV **(FOR 216271)**	1
7	220293	MOUNT,RETRACTABLE STEP, BLACK **(FOR 175632)**	1
8	216270	STEP,RETRACTABLE, GALV **(FOR 216271)**	1
8	220294	STEP,RETRACTABLE, YELLOW **(FOR 216271)**	1

Eastern Wrecker Sales Inc

Table provided for general use.

NOTES:

Eastern Wrecker Sales Inc

Storage-Options

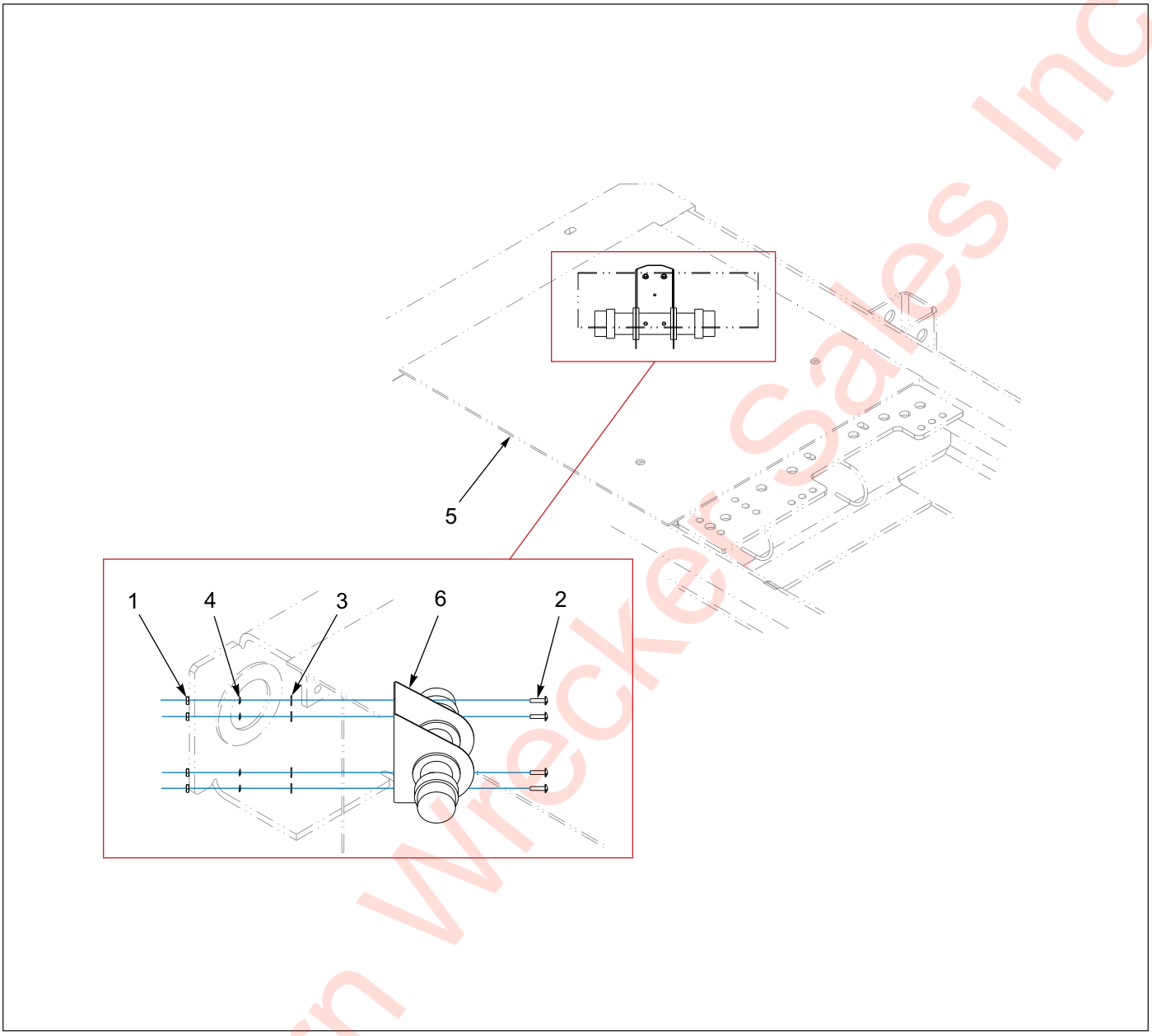

Figure 1-138: Registration Holder Assembly-175989

Registration Holder Assembly-175989

ITEM	PART NO.	DESCRIPTION	QTY.
	175989	REGISTRATION HOLDER INSTALLATION	- -
1	1-512-010007-03	NUT, HEX LOCK 10-24	4
2	1-656-010003051	SCREW, RD HEAD SQ NECK 10-24 X 3/4	4
3	1-861-010032-03	WASHER, FLAT #10	4
4	1-861-010034-07	WASHER, FLAT #10	4
5	-----	GOOSENECK WELDMENT	- -
6	174598	REGISTRATION CARD HOLDER	1

Eastern Wrecker Sales Inc

Table provided for general use.

NOTES:

Eastern Wrecker Sales Inc

Upper Deck-Options

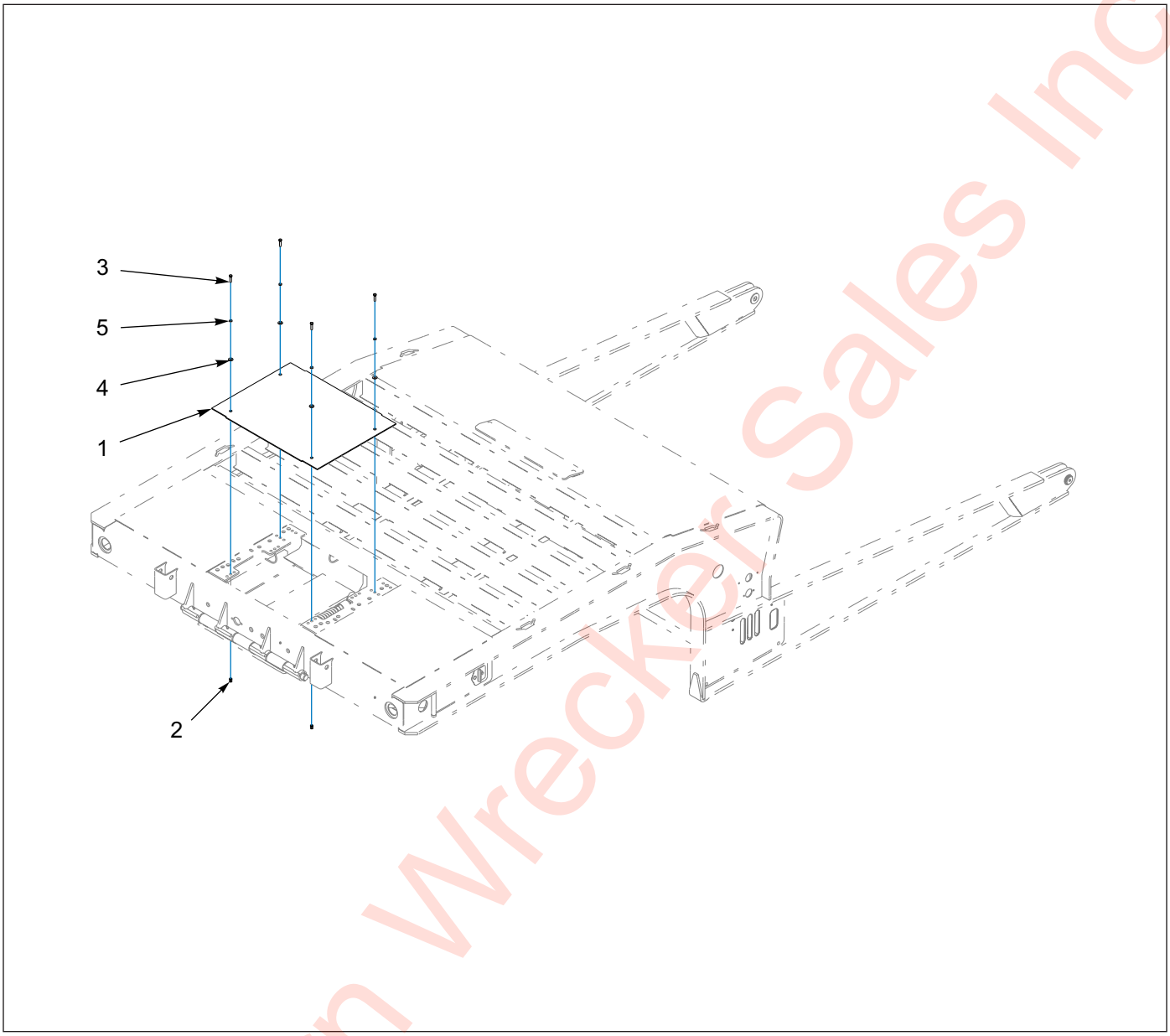

Figure 1-139: Cover Assembly-137635

Cover Assembly-137635

ITEM	PART NO.	DESCRIPTION	QTY.
	137635	COVER ASSEMBLY, UPPER DECK **(REF. ONLY)**	- -
1	137634	COVER, UPPER DECK	1
2	139254	NUTSERT, 3/8-16	4
3	1-654-010051-07	SCREW, HEX HEAD CAP 3/8-16 X 1-1/2 GR5	4
4	1-861-010032-11	WASHER, FLAT 3/8W	4
5	1-861-010034-11	WASHER, SPLIT LOCK 3/8	4
6	1-007-010025	PLUG, O-RING BOSS 3/4-16 **(NOT SHOWN)**	1

Eastern Wrecker Sales Inc

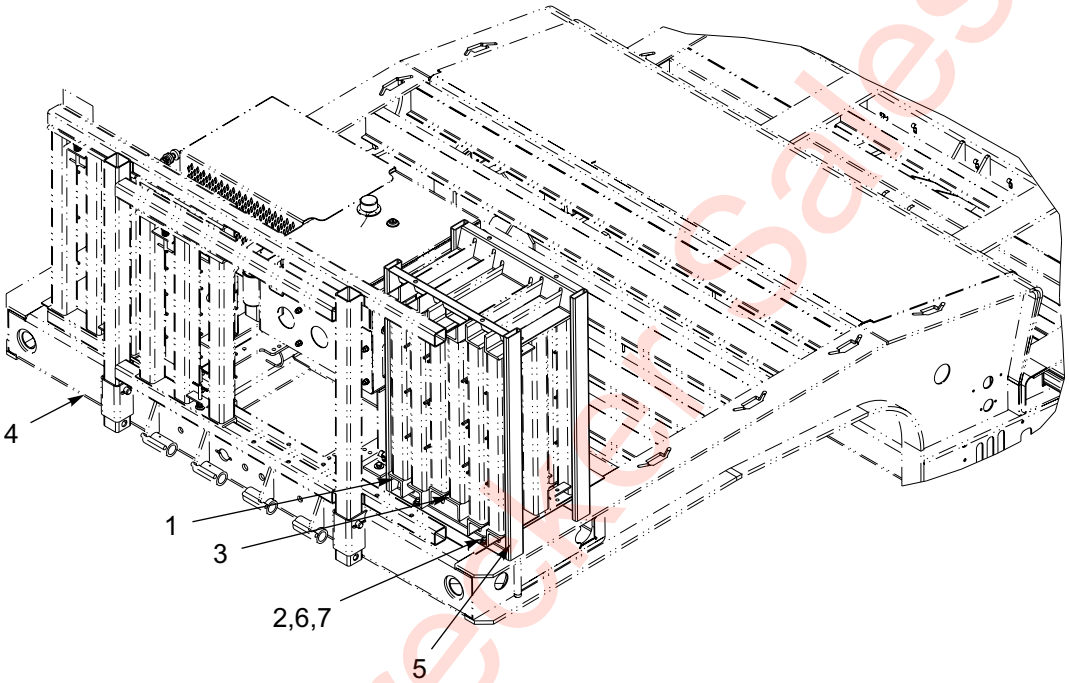

Figure 1-140: Extension Bridge Storage Rack Assembly-136838

Extension Bridge Storage Rack Assembly-136838

ITEM	PART NO.	DESCRIPTION	QTY.
	136828	UPPER DECK EXTENSION BRIDGE STORAGE RACK	- -
1	120492	EXTENSION WELDMENT, REAR WHEEL WELL	- -
2	124971	NUT, FLANGE HEAD SPIRALOCK 1/2-13	4
3	126609	EXTENSION WELDMENT, FRONT WHEEL WELL	- -
4	136396	P/O EXTENSION INSTALLATION	- -
5	136829	RACK WELDMENT U/D STOR EXT BRIDGE	1
6	1-654-010055-02	SCREW, HEX HEAD CAP 1/2-13 X 1-1/4 GR5	4
7	1-861-010032-15	WASHER, FLAT 1/2W	4

Eastern Wrecker Sales Inc

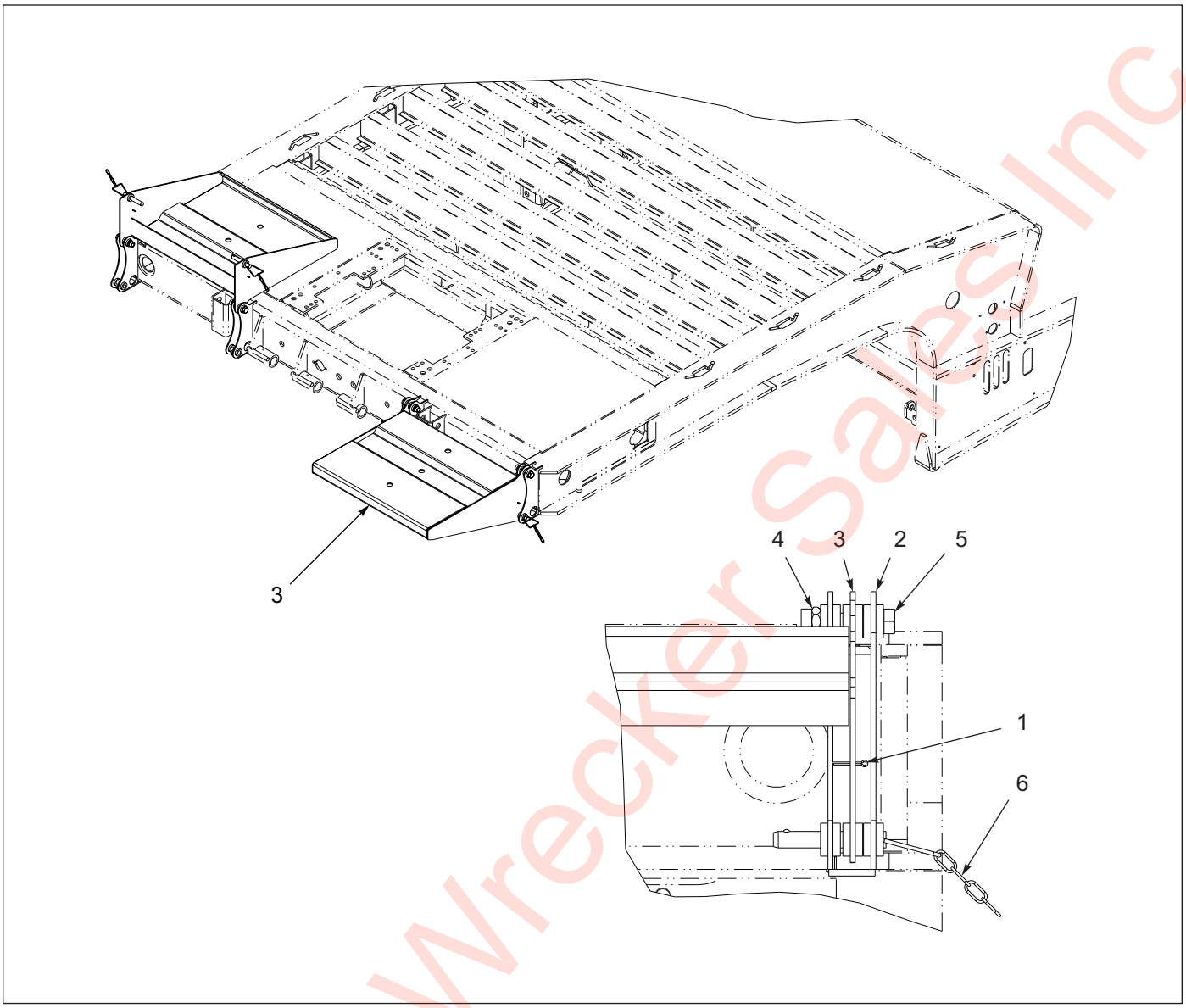

Figure 1-141: Front Flip Extension-103538, 174253, 197164

Front Flip Extension-103538, 174253, 197164

ITEM	PART NO.	DESCRIPTION	QTY.		
	130538	FRONT FLIP EXTENSION, 400-102 **(WB TOOLBOX ONLY)**	- -		
	174253	FRONT FLIP EXTENSION, 400-108 **(WB TOOLBOX ONLY)**		- -	
	194164	FRONT FLIP EXTENSION, 400-120 **(WB TOOLBOX ONLY)**			- -
1	101386	PIN, COTTER 1/8 X 1	4	4	4
2	130537	FRAME MOD., FRONT FLIP	1	1	1
3	130540	EXTENSION WELDMENT, FRONT FLIP 400	2	- -	- -
3	174254	EXTENSION WELDMENT, FRONT FLIP, 108	- -	2	- -
3	194162	EXTENSION WELDMENT, FRONT FLIP, 120	- -	- -	2
4	1-512-010005-13	NUT, HEX LOCK 5/8-11 GRB	4	4	4
5	1-654-010059-11	SCREW, HEX HEAD CAP 5/8-11 X 3-1/2 GR5	4	4	4
6	2-557-010426	PIN, DETENT 5/8 W/ CHAIN	2	2	
7	185038	STRAP INSTL FLIP EXT SUPPORT **(USED W/ WARN OR DP WINCH)**	- -	- -	- -

Eastern Wrecker Sales Inc

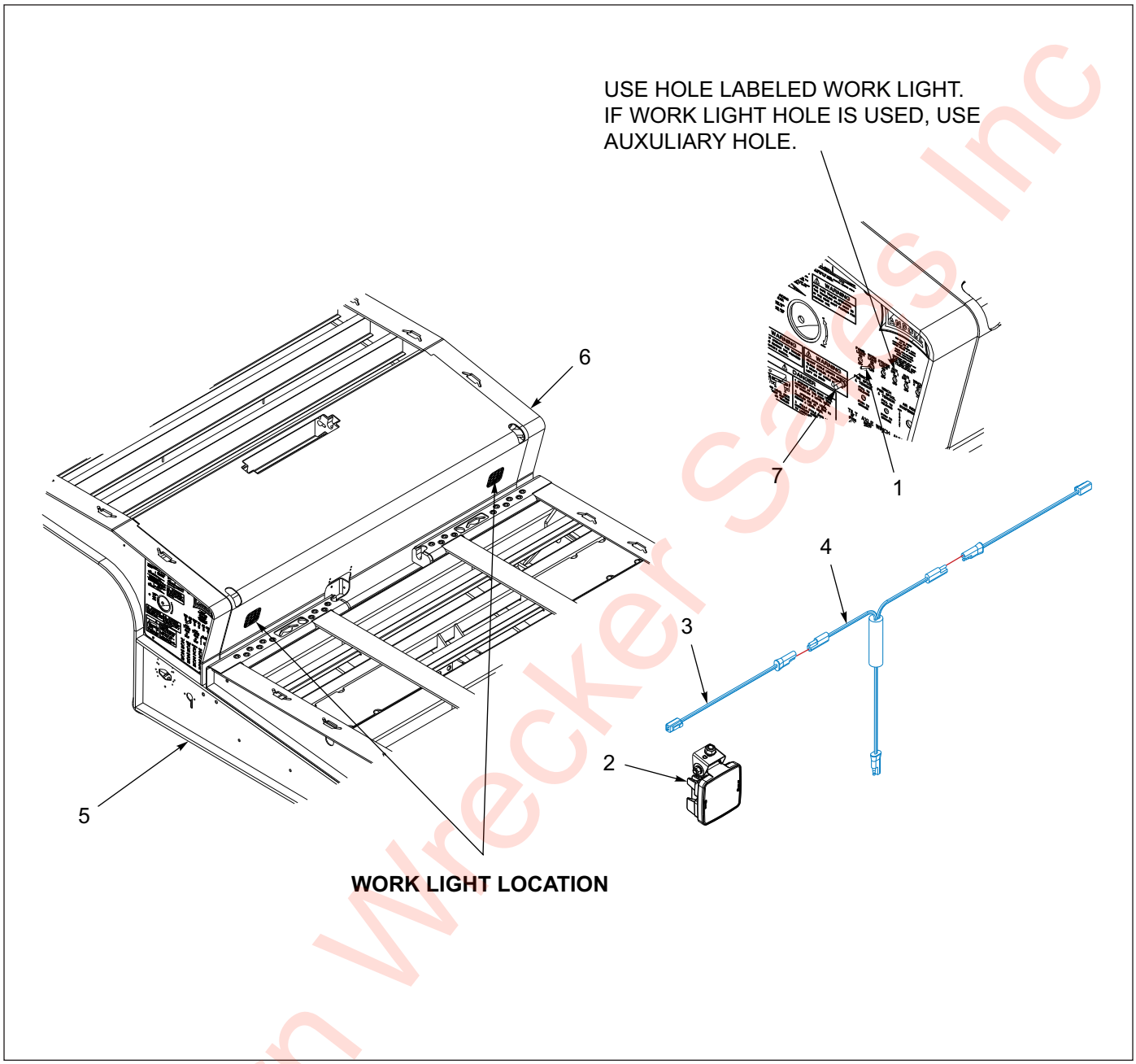

Figure 1-142: Upper Deck - Slope Light Installation

Upper Deck - Slope Light Installation

ITEM	PART NO.	DESCRIPTION	QTY.
	212392	LIGHT INSTALLATION, 400 U/D SLOPE	- -
1	150117	TOGGLE SWITCH, SEALED S.P.S.T.	1
2	163996	LIGHT, LED WHITE FLOOD LAMP	2
3	164052	HARNESS, 60” BRANCH WORK LIGHT	2
4	169853	HARNESS T PWR BRANCH	1
5	189015	FRAME WLDMT, 440A-53-102	- -
6	213978	G/N WLDMT 400B TOP TLBX	- -
7	81264	RUBBER BOOT FOR ELECT SWITCH	1

Eastern Wrecker Sales Inc

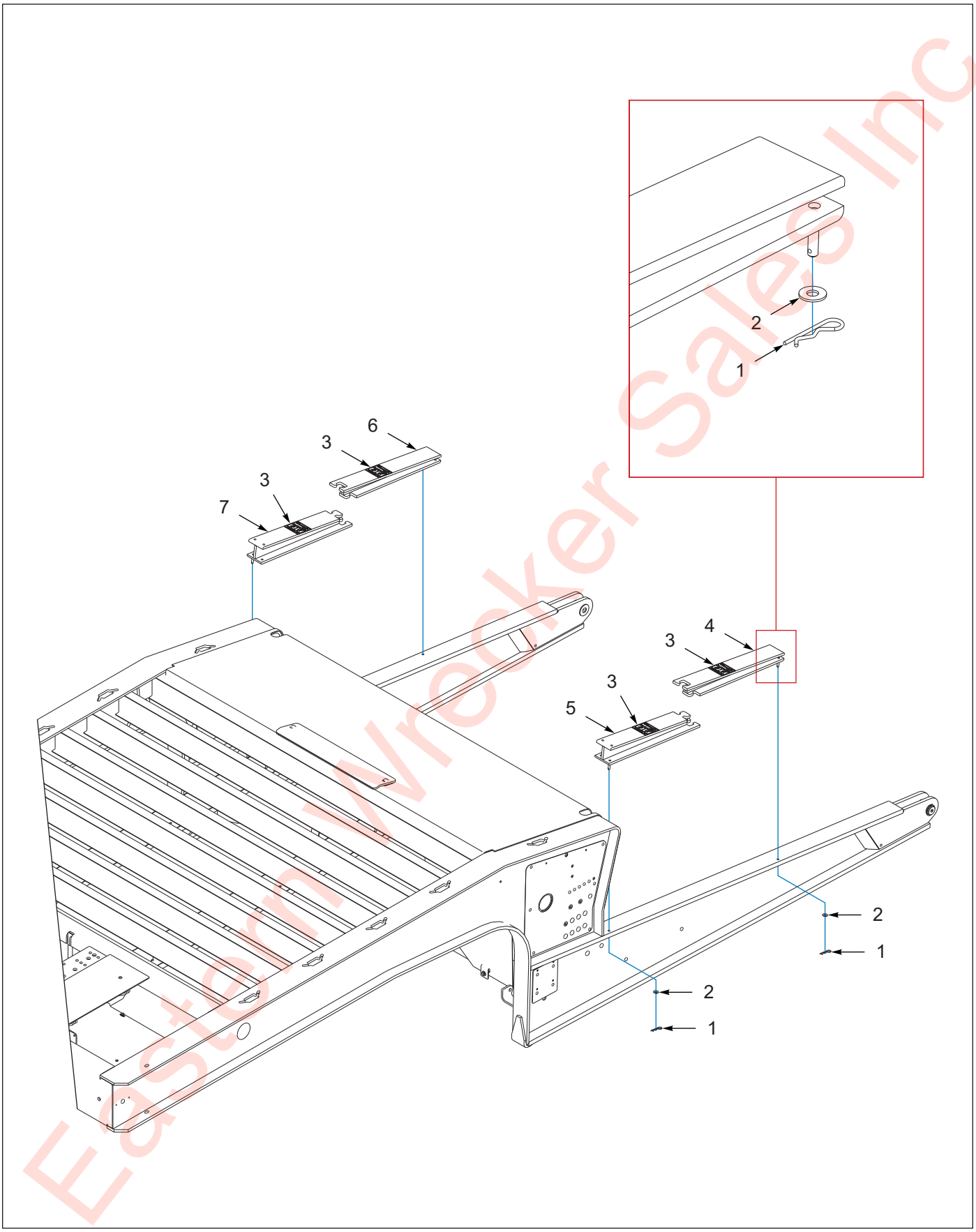

Eastern Wrecker Sales Inc

Figure 1-143: Tilt Wedge Assembly

Tilt Wedge Assembly

ITEM	PART NUMBER	DESCRIPTION	QTY
	230586	INSTL G/N TILT WEDGE	- -
1	1-557-010403	HAIRPIN 1/8	4
2	1-861-010032-11	WASHER, FLAT 3/8 W ZP/CD	4
3	2-573-010335	DECAL, DANGER PINCHING	4
4	228976	WLDMT G/N TILT WEDGE LH RR	1
5	228979	WLDMT G/N TILT WEDGE LH FRT	1
6	230584	WLDMT G/N TILT WEDGE RH RR	1
7	230585	WLDMT G/N TILT WEDGE RH FRT	1

Eastern Wrecker Sales Inc

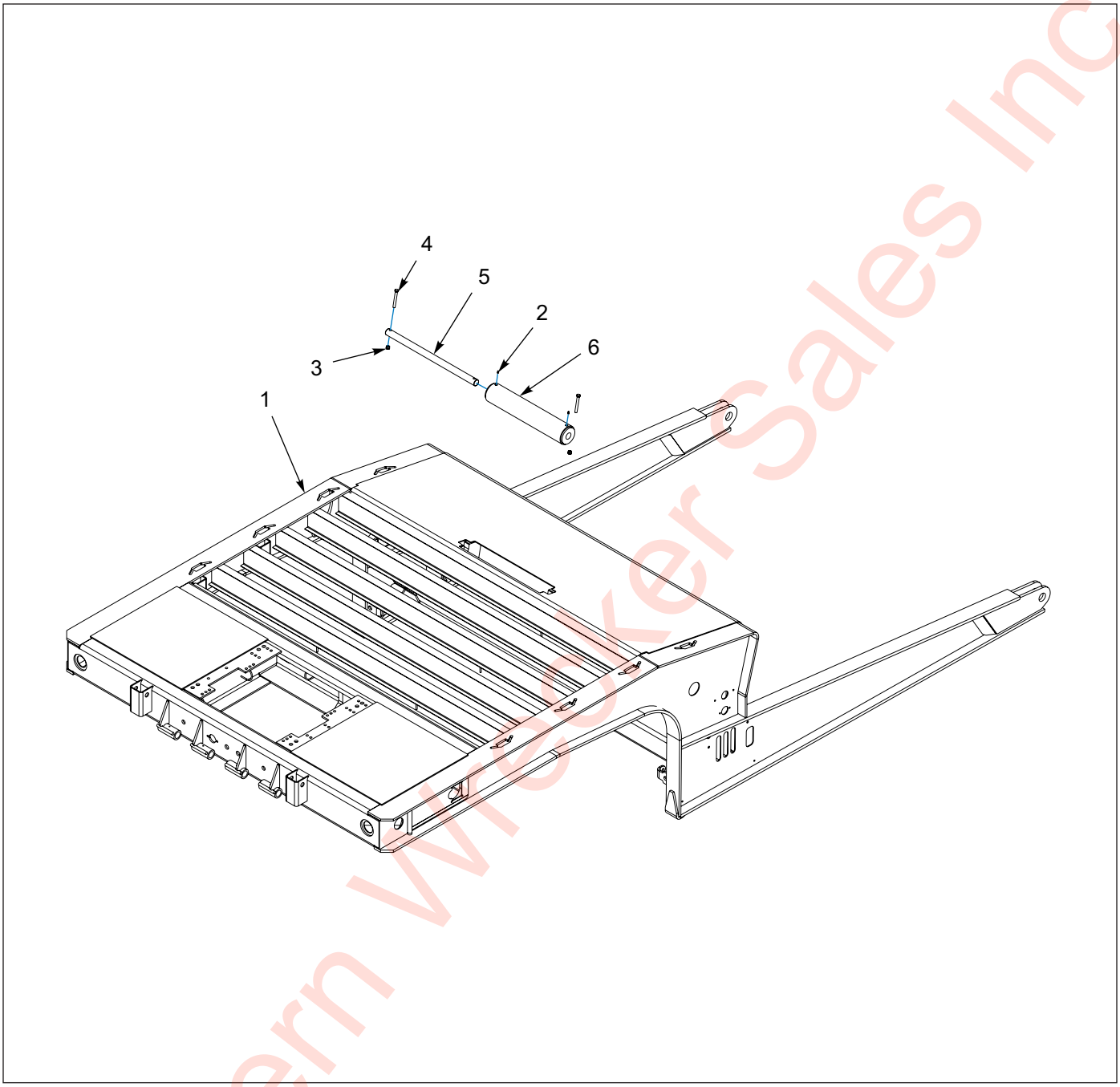

Figure 1-144: Upper Deck - Roller Installation

Upper Deck - Roller Installation

ITEM	PART NO.	DESCRIPTION	QTY.
	131895	UPPER DECK ROLLER INSTALLATION	- -
1	213978	G/N WLDMT 400B TOP TLBX	- -
2	1-298-010001-1	FITTING, GREASE 1/4-28 STR SHORT	2
3	1-512-010005-09	NUT, HEX LOCK 1/2-13 GRB	2
4	1-654-010055-13	SCREW, HEX HEAD CAP 1/2-13 X 4 GR5	2
5	3-642-010134	ROLLER ROD	1

Eastern Wrecker Sales Inc

Upper Deck - Roller Installation

ITEM	PART NO.	DESCRIPTION	QTY.
6	3-645-010059	ROLLER WELDMENT, CABLE U/D	1

Eastern Wrecker Sales Inc

Winch Options

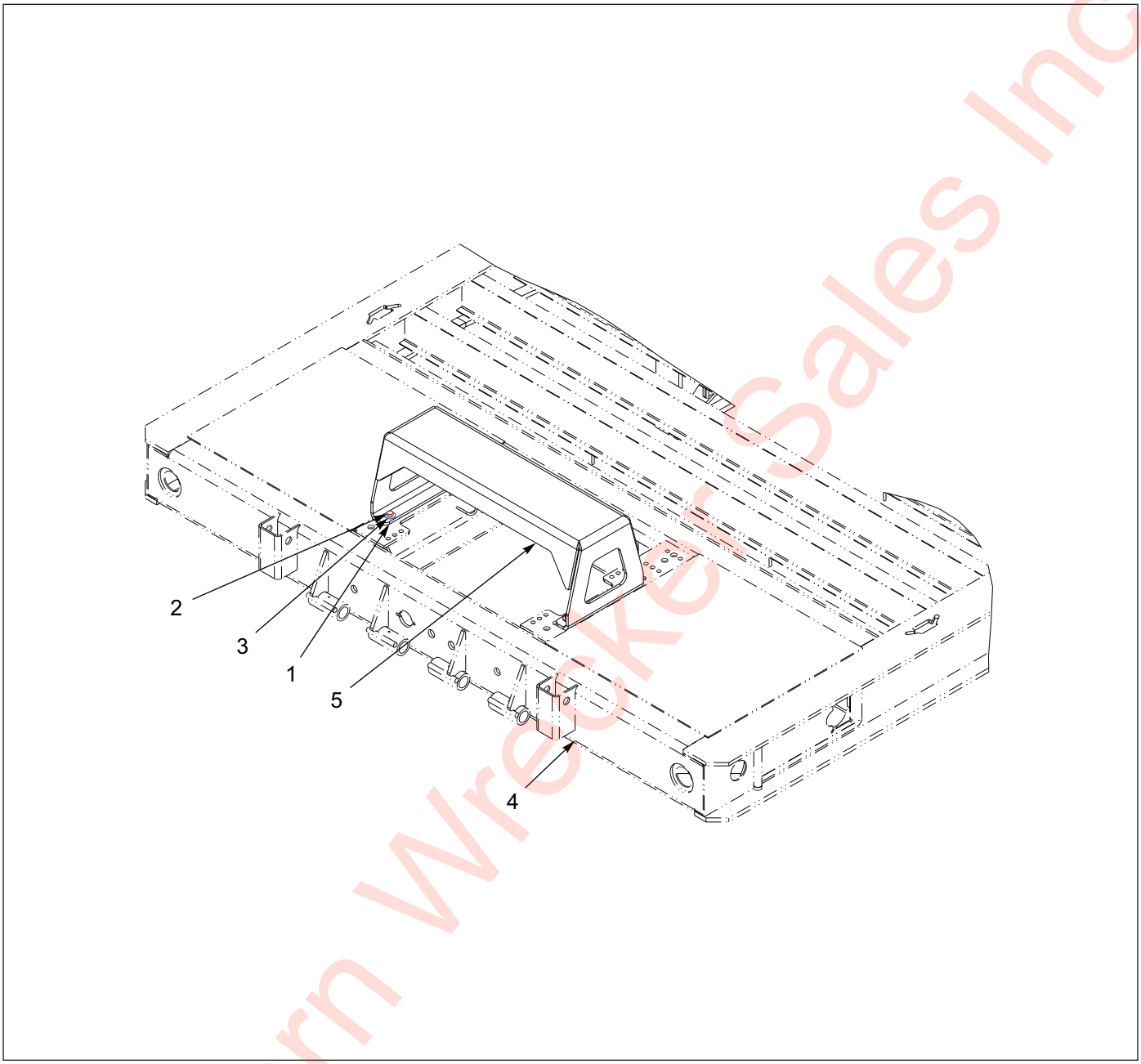

Figure 1-145: Guard Assembly, 12K/20K (BRADEN)-145598

Guard Assembly, 12K/20K (BRADEN)-145598

ITEM	PART NO.	DESCRIPTION	QTY.
	145598	12/20K WINCH GUARD INSTALLATION	- -
1	1-512-010005-09	NUT, HEX LOCK 1/2-13	4
2	1-654-010055-05	SCREW, HEX HEAD CAP 1/2-13 X 2 GR5	4
3	1-861-010032-15	WASHER, FLAT 1/2	8
4	213978	G/N WLDMT 400B TOP TLBX	- -
5	145599	GUARD, WINCH 12/20K BRADEN	1

Eastern Wrecker Sales Inc

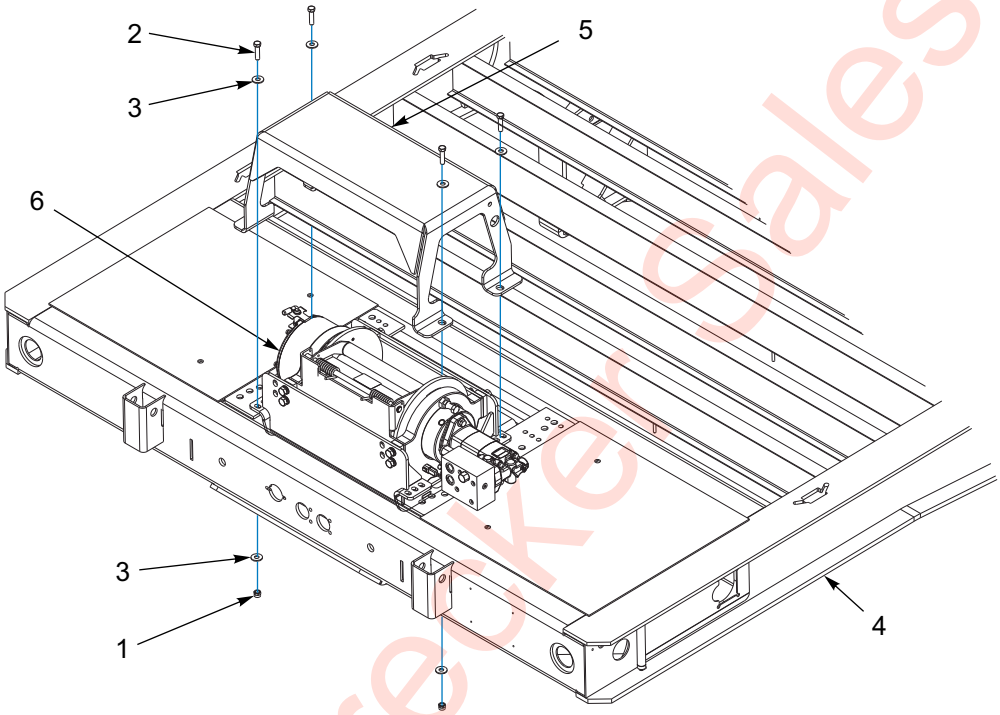

Figure 1-146: Guard Assembly, 20K/30K (WARN)-171166

Guard Assembly, 20K/30K (WARN)-171166

ITEM	PART NO.	DESCRIPTION	QTY.
	171166	12/20K WINCH GUARD INSTALLATION	- -
1	1-512-010005-09	NUT, HEX LOCK 1/2-13	4
2	1-654-010055-05	SCREW, HEX HEAD CAP 1/2-13 X 2 GR5	4
3	1-861-010032-15	WASHER, FLAT 1/2	8
4	213978	G/N WLDMT 400B TOP TLBX	- -
5	171167	GUARD, WINCH 20K/30K WARN	1
6	-----	WINCH ASSEMBLY, WARN	- -

Eastern Wrecker Sales Inc

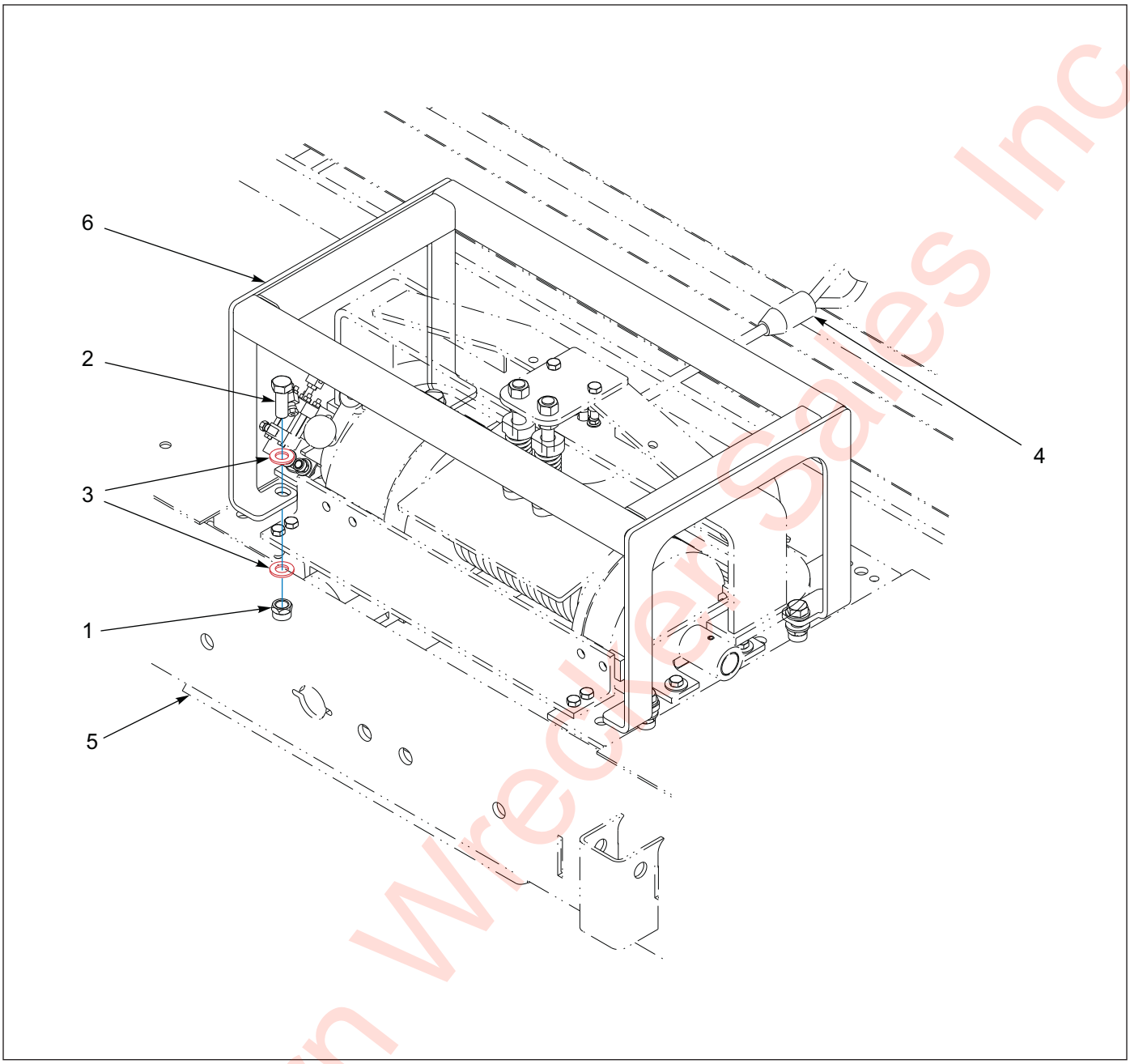

Figure 1-147: Guard Assembly, Pivot 20K-163769

Guard Assembly, Pivot 20K-163769

ITEM	PART NO.	DESCRIPTION	QTY.
	163769	GUARD INSTALLATION, WINCH 20K PIVOT	- -
1	1-512-010005-15	NUT, HEX LOCK 3/4-10 GRB	4
2	1-654-010061-05	SCREW, HEX HEAD CAP 3/4-10 X 2 GR5	4
3	1-861-010032-20	WASHER, FLAT, 3/4N	2
4	123210	WINCH, 20K GUIDE AIR TEN/REL	- -
5	213978	G/N WLDMT 400B TOP TLBX	- -
6	163770	MOUNT WELDMENT, HORIZONTAL SPARE TIRE	1

Eastern Wrecker Sales Inc

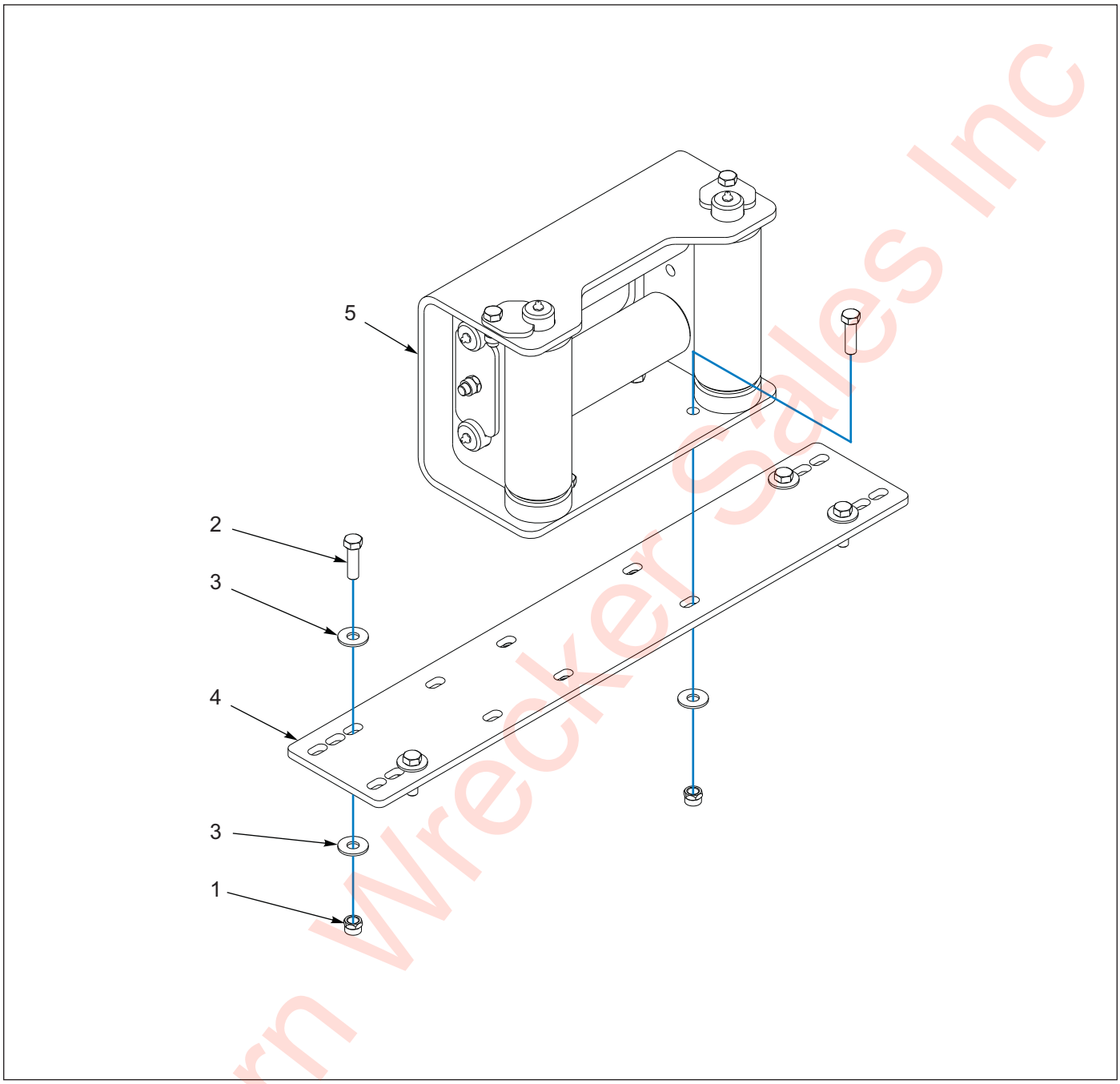

Figure 1-148: Guide Assembly, 4 Roller 12K (BRADEN)-16155

Guide Assembly, 4 Roller 12K (BRADEN)-161155

ITEM	PART NO.	DESCRIPTION	QTY.
	161155	4 ROLLER GUIDE INSTALLATION - 12K BRADEN	
1	1-512-010005-09	NUT, HEX LOCK 1/2-13 GRB	8
2	1-654-010055-04	SCREW, HEX HEAD CAP 1/2-13 X 1-3/4 GR5	8
3	1-861-010032-15	WASHER, FLAT 1/2W	12
4	145588	PLATE, ROLLER GUIDE MOUNT	1
5	161150	GUIDE ASSEMBLY, WINCH 12K BRADEN **(SEE PAGE 1-218)**	1

Eastern Wrecker Sales Inc

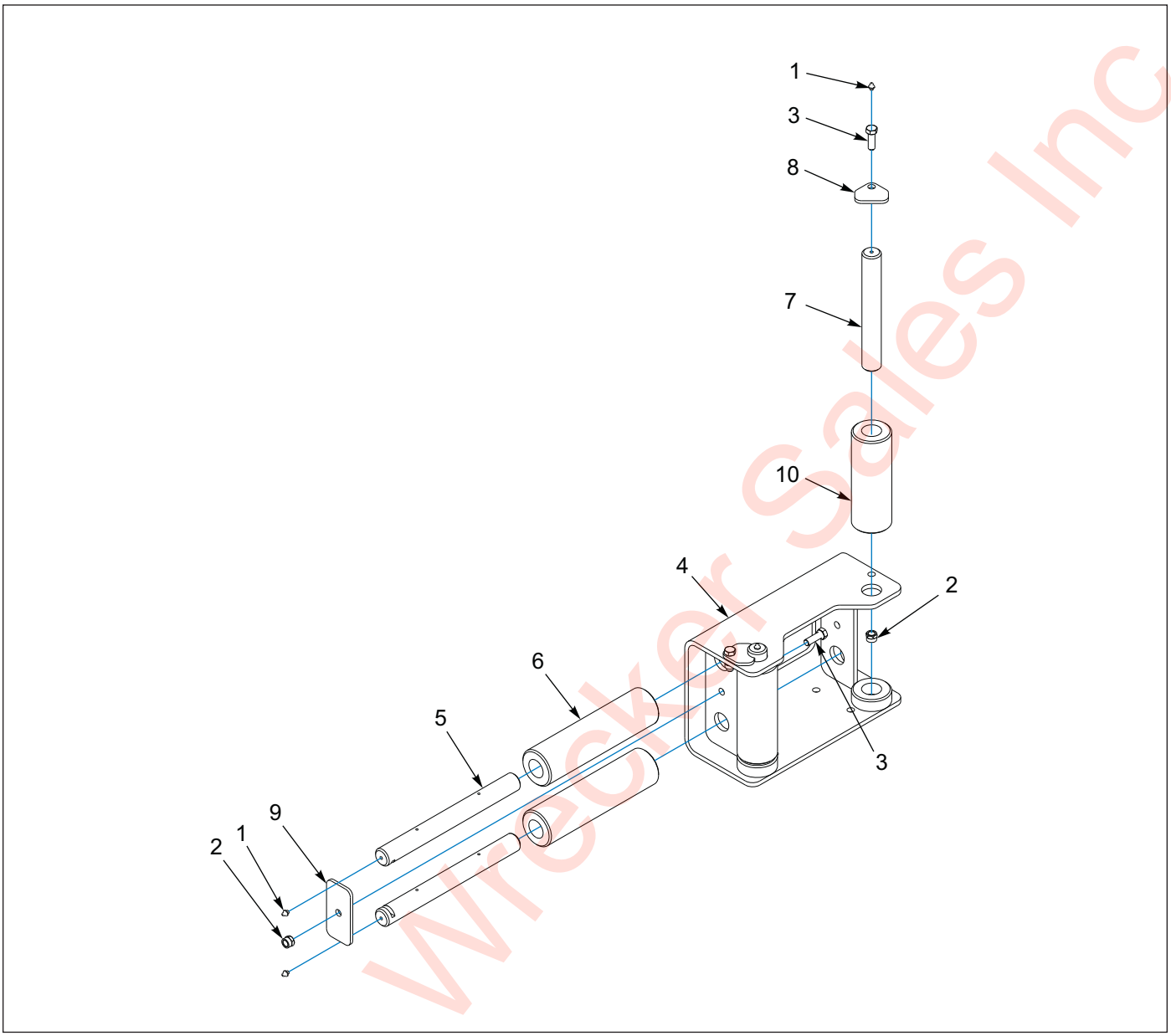

Figure 1-149: Guide Assembly Components, 4 Roller 12K (BRADEN)-161150

Guide Assembly Components, 4 Roller 12K (BRADEN)-161150

ITEM	PART NO.	DESCRIPTION	QTY.
	161150	GUIDE ASSEMBLY, WINCH 12K (BRADEN)	
1	1-298-010001-1	FITTING, GREASE STR SHORT 1/4-28	6
2	1-512-010005-09	NUT, HEX LOCK 1/2-13 GRB	11
3	1-654-010055-03	SCREW, HEX HEAD CAP 1/2-13 X 1-1/2 GR5	3
4	161151	BRACKET WELDMENT, WINCH GUIDE	1
5	161153	PIN, HORIZONTAL ROLLER GUIDE	2
6	161154	ROLLER, HORIZONTAL WINCH GUIDE	2
7	3-557-010543	PIN, VERTICAL ROLLER 20K GUIDE	2
8	3-565-011792	PLATE, GUIDE LOCK TOP	2
9	3-565-011793	PLATE, GUIDE LOCK SIDE	1
10	3-645-010087	ROLLER, VERTICAL 20K WINCH GUIDE	2

Eastern Wrecker Sales Inc

Table provided for general use.

NOTES:

Eastern Wrecker Sales Inc

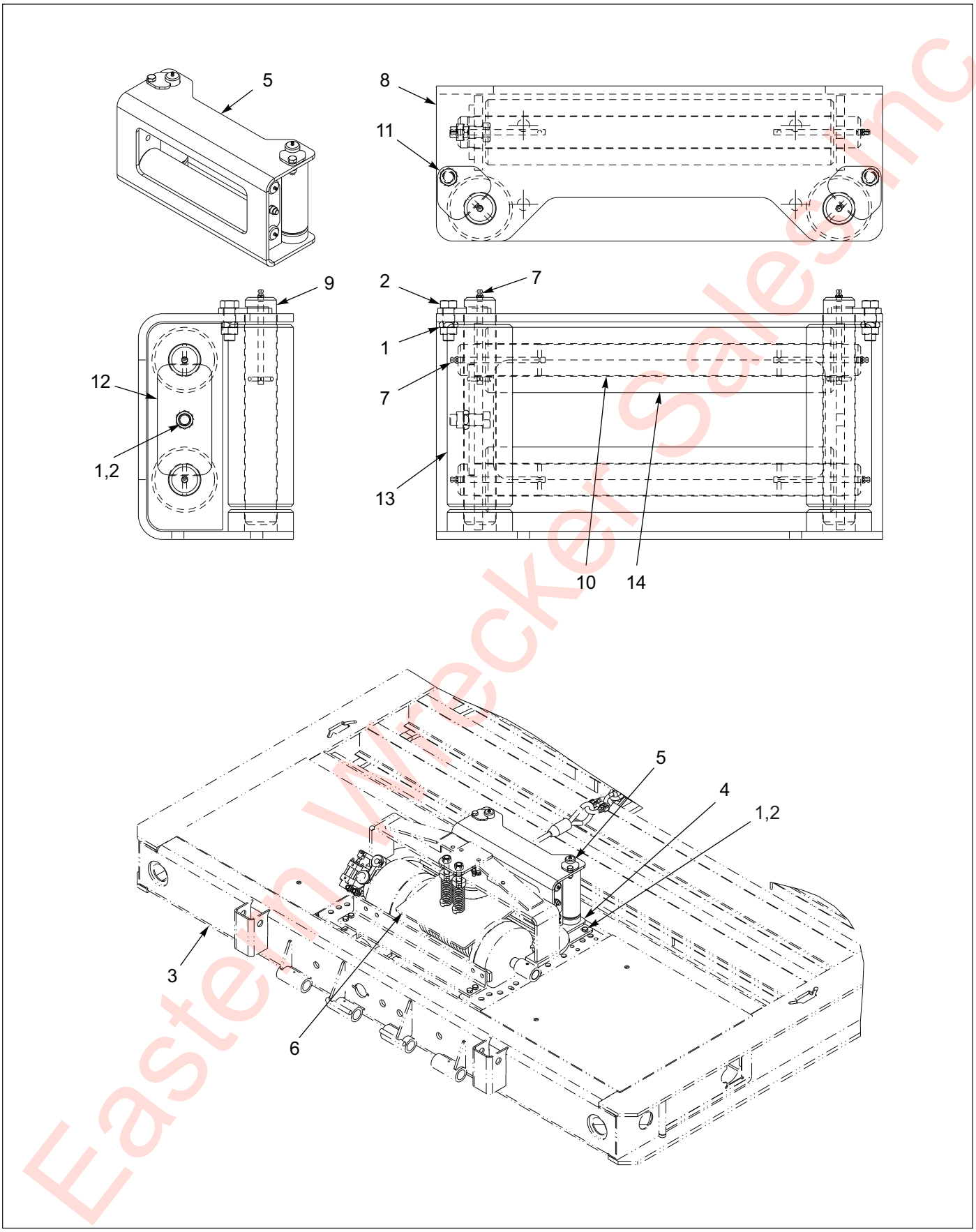

Eastern Wrecker Sales Inc

Figure 1-150: Guide Assembly, 4 Roller 20K (BRADEN)-145589

Guide Assembly, 4 Roller 20K (BRADEN)-145589

ITEM	PART NO.	DESCRIPTION	QTY.
--	145589	4 ROLLER GUIDE INSTALLATION	--
1	1-512-010005-09	NUT, HEX LOCK 1/2-13 GRB	11
2	1-654-010055-03	SCREW, HEX HEAD CAP 1/2-13 X 1-1/2 GR5	11
3	130662	GOOSENECK WELDMENT	--
4	145588	PLATE, ROLLER GUIDE MOUNT	1
5	3-352-010067-2	GUIDE ASSEMBLY, WINCH **(INCL ITEMS 1-2, 7-14)**	1

Eastern Wrecker Sales Inc

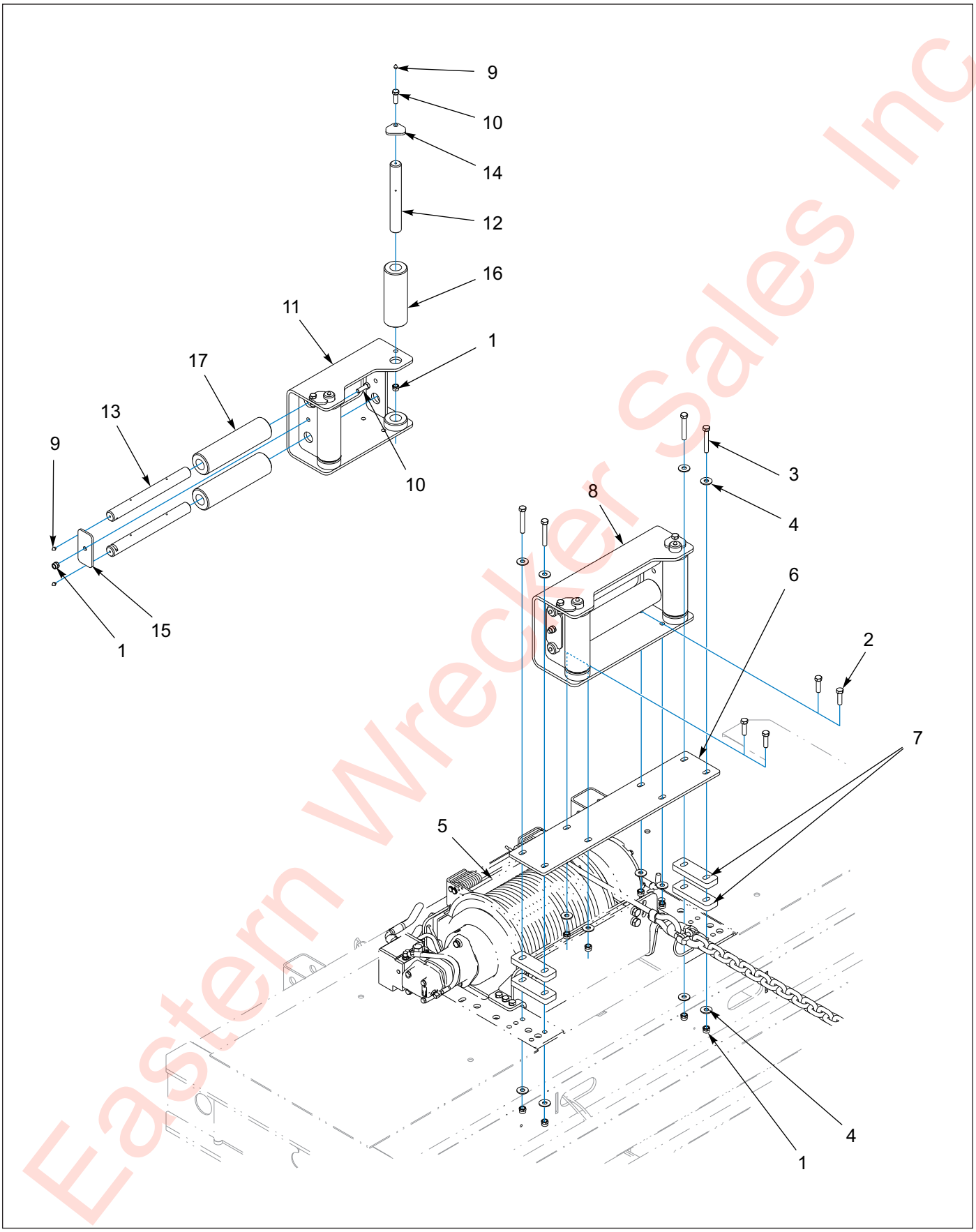

Eastern Wrecker Sales Inc

Figure 1-151: Guide Assembly, 4 Roller 20K/30K (WARN)-162258

Guide Assembly, 4 Roller 20K/30K (WARN)-162258

ITEM	PART NO.	DESCRIPTION	QTY.
--	162258	GUIDE INSTL 4 ROLLER WARN	--
1	1-512-010005-09	NUT, HEX LOCK 1/2-13 GRB	11
2	1-654-010055-04	SCREW, HEX HEAD CAP 1/2-13 X 1-1/2 GR5	4
3	1-654-010055-10	SCREW, HEX HEAD CAP 1/2-13 X 3-1/4 GR5	4
4	1-861-010032-15	WASHER, FLAT 1/2W	12
5	151818	WINCH INSTALLATION, 20K WARN	--
5	155411	WINCH INSTALLATION, 30K WARN	--
6	162259	PLATE, ROLLER GUIDE	1
7	162260	PLATE, ROLLER SPACER	4
8	3-352-010067-2	GUIDE ASSEMBLY, WINCH **(INCL ITEMS 1, 9-17)**	1
9	1-298-010001-1	FITTING, GREASE STR SHORT 1/4-28	6
10	1-654-010055-03	SCREW, HEX HEAD CAP 1/2-13 X 1-1/2 GR5	3
11	3-120-010494	BRACKET WELDMENT, 20K WINCH GUIDE	1
12	3-557-010543	PIN, VERTICAL ROLLER 20K GUIDE	2
13	3-557-010544	PIN, HORIZONTAL ROLLER 20K GUIDE	2
14	3-565-011792	PLATE, GUIDE LOCK TOP	2
15	3-565-011793	PLATE, GUIDE LOCK SIDE	1
16	3-645-010087	ROLLER, VERTICAL 20K WINCH GUIDE	2
17	3-645-010088	ROLLER, HORIZONTAL 20K WINCH GUIDE	2

Eastern Wrecker Sales Inc

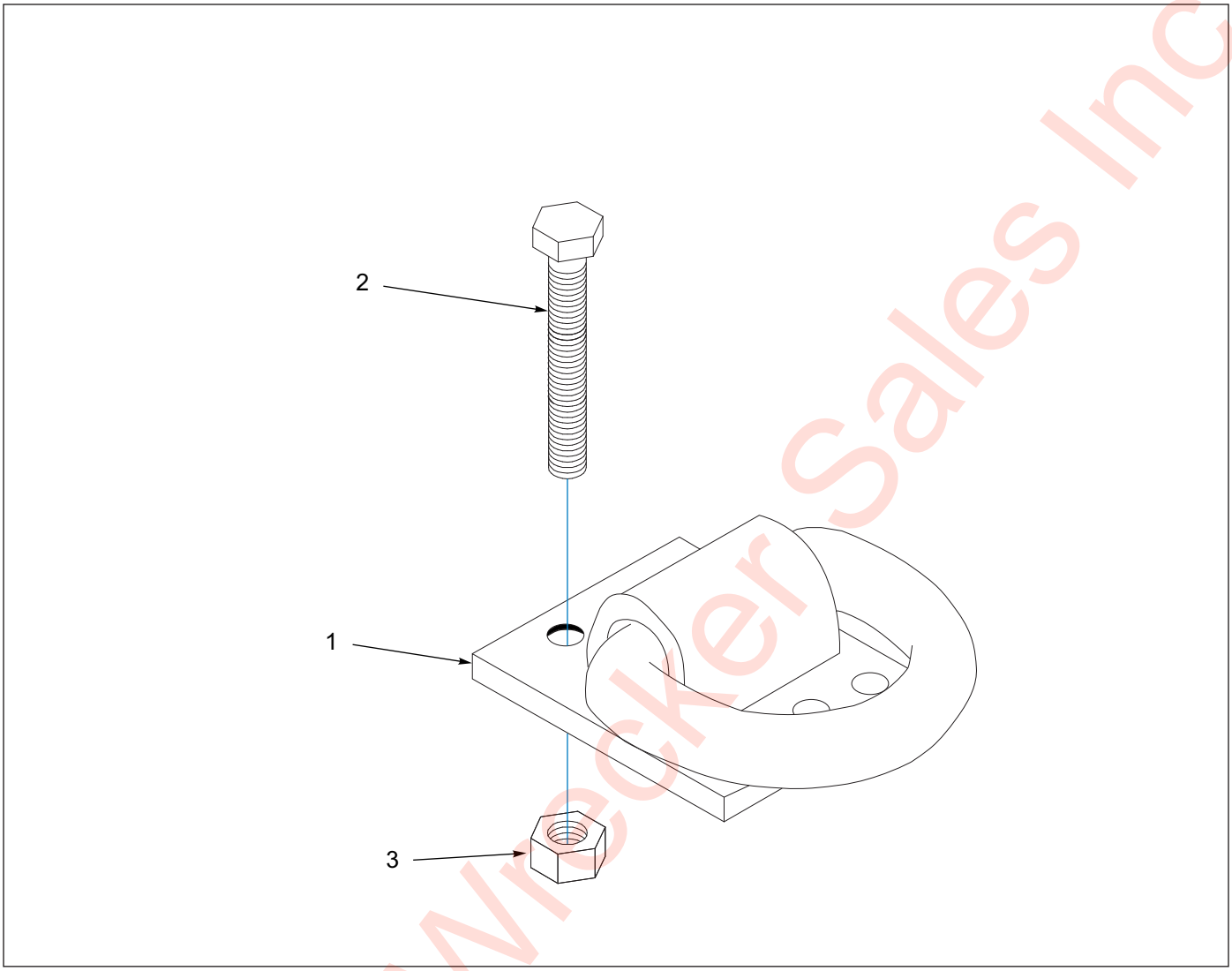

Figure 1-152: Tie Down Assembly, D-Ring-3-793-010041

Tie Down Assembly, D-Ring-3-763-010041

ITEM	PART NO.	DESCRIPTION	QTY.
	3-793-010041	TIE DOWN INSTALLATION WINCH D-RING	
1	3-793-010040	TIE DOWN, WINCH	1
2	1-654-010055-03	SCREW, HEX HEAD CAP 1/2-13 X 1-1/2 GR5	6
3	1-512-010005-09	NUT, HEX LOCK 1/2-13 GRB	6

Eastern Wrecker Sales Inc

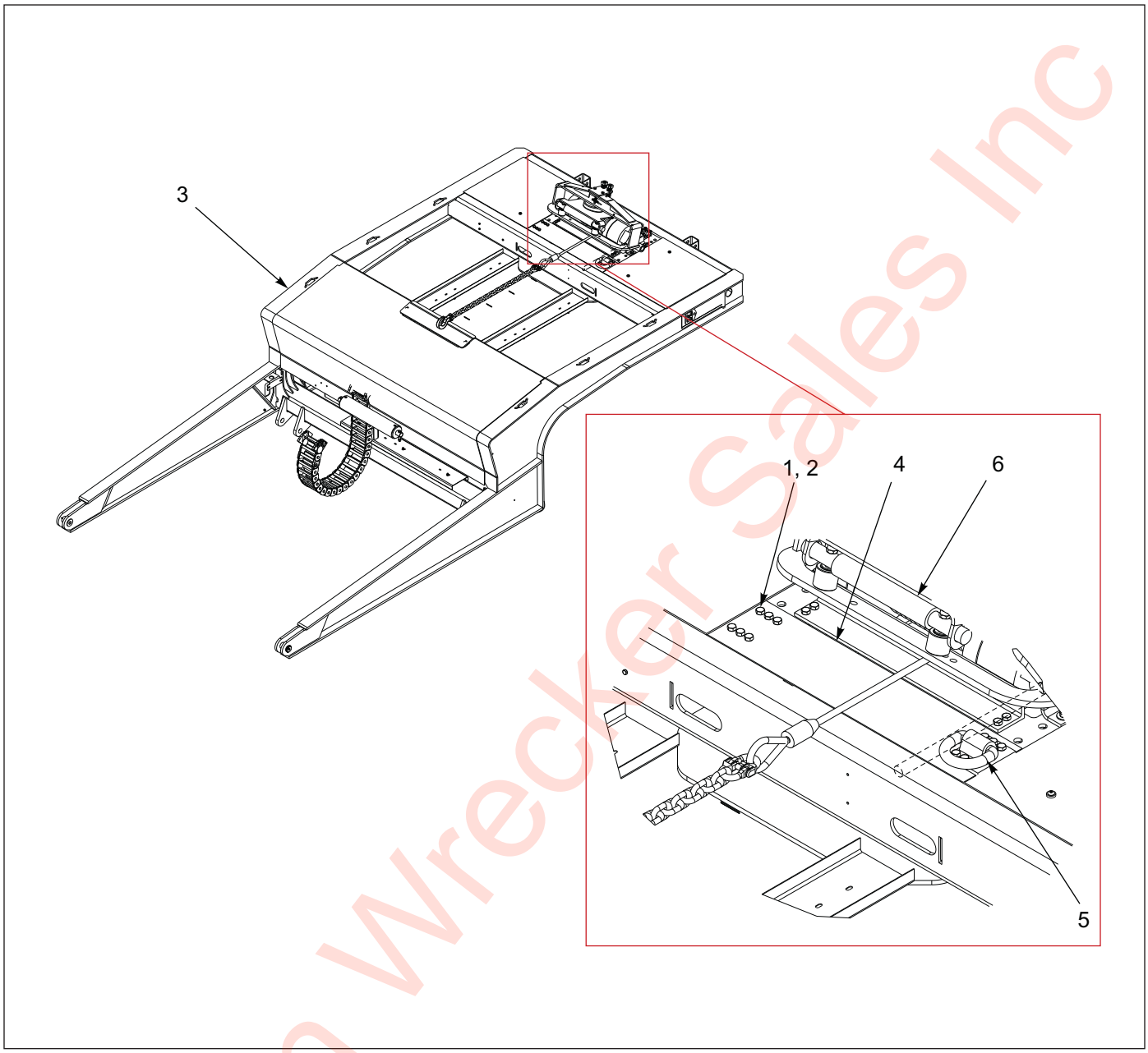

Figure 1-153: Trim Plate Assembly-166767

Trim Plate Assembly-166767

ITEM	PART NO.	DESCRIPTION	QTY.
	166767	WINCH TRIM PLATE INSTALLATION	- -
1	1-512-010005-09	NUT, HEX LOCK 1/2-13 GRB	6
2	1-654-010055-03	SCREW, HEX HEAD CAP 1/2-13 X 1-1/2 GR5	6
3	213978	G/N WLDMT 400B TOP TLBX	- -
4	166768	PLATE, WINCH TRIM 20K	1
5	3-793-010040	TIE DOWN, WINCH	- -
6	3-873-010140-01	WINCH INSTALLATION, 20K UPPER DECK	- -

Eastern Wrecker Sales Inc

Miscellaneous Options

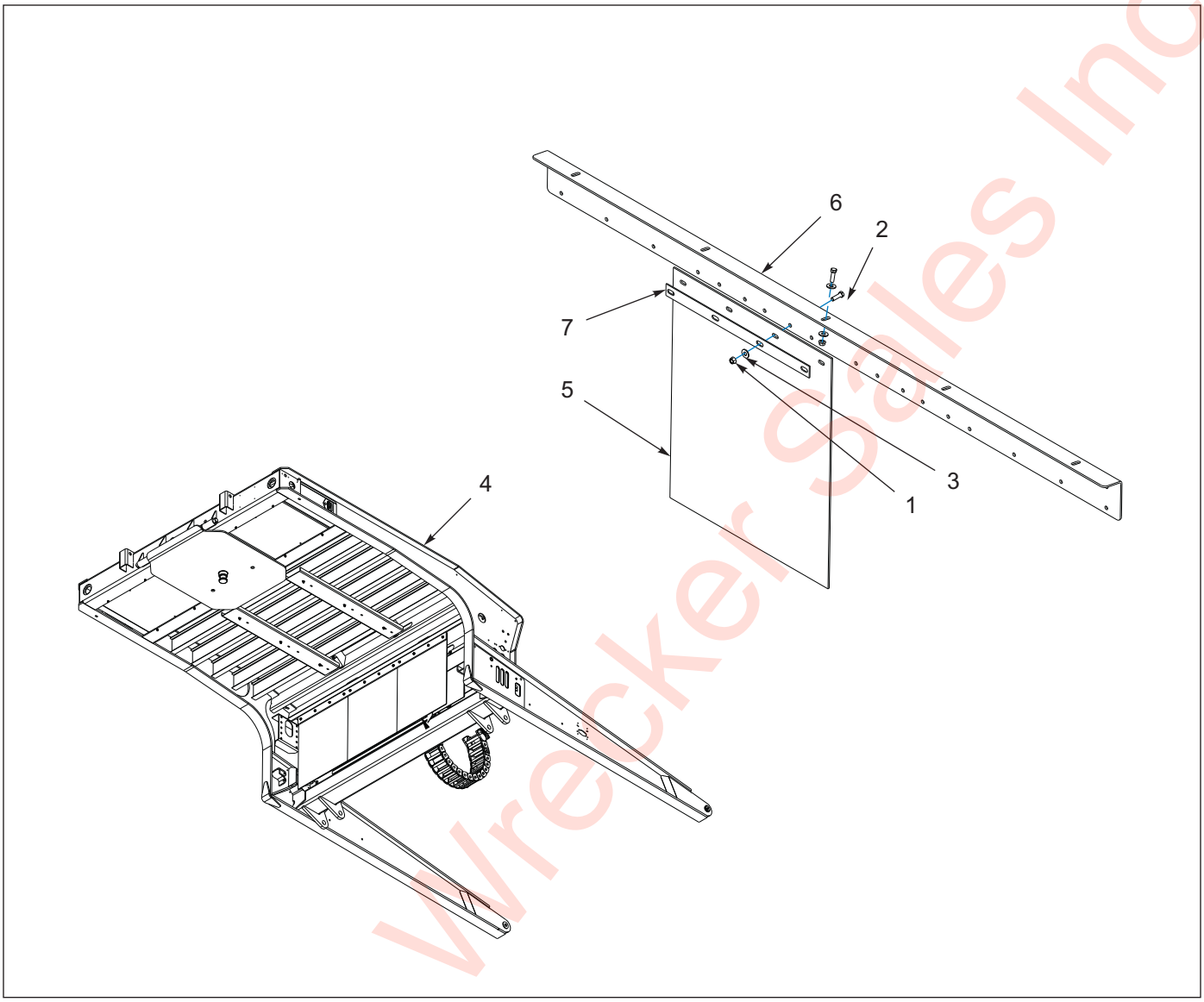

Figure 1-154: Gooseneck Mud Flap Installation

Gooseneck Mud Flap Installation

ITEM	PART NO.	DESCRIPTION	QTY.		
	164434	MUD FLAP INSTALLATION (455-108)	- -		
	174597	MUD FLAP INSTALLATION (400-102)		- -	
	180539	MUD FLAP INSTALLATION (400-120)			- -
1	1-510-010001	NUT, FLANGE LOCK 3/8-16	12	17	20
2	1-654-010051-06	SCREW, HEX HEAD CAP 3/8-16 X 1-1/4 GR5	12	17	20
3	1-861-010032-11	WASHER, FLAT 3/8W	12	22	25
4	213978	G/N WLDMT 400B TOP TLBX	- -	- -	- -
5	131195	MUD FLAP, BLACK POLYMER 24 X 30	3	3	4
6	180538	BRACKET, MUDFLAP G/N UNDERSIDE	--	1	--
7	3-762-010017	CLAMP, MUD FLAP	3	3	4

Eastern Wrecker Sales Inc

Table provided for general use.

NOTES:

Eastern Wrecker Sales Inc

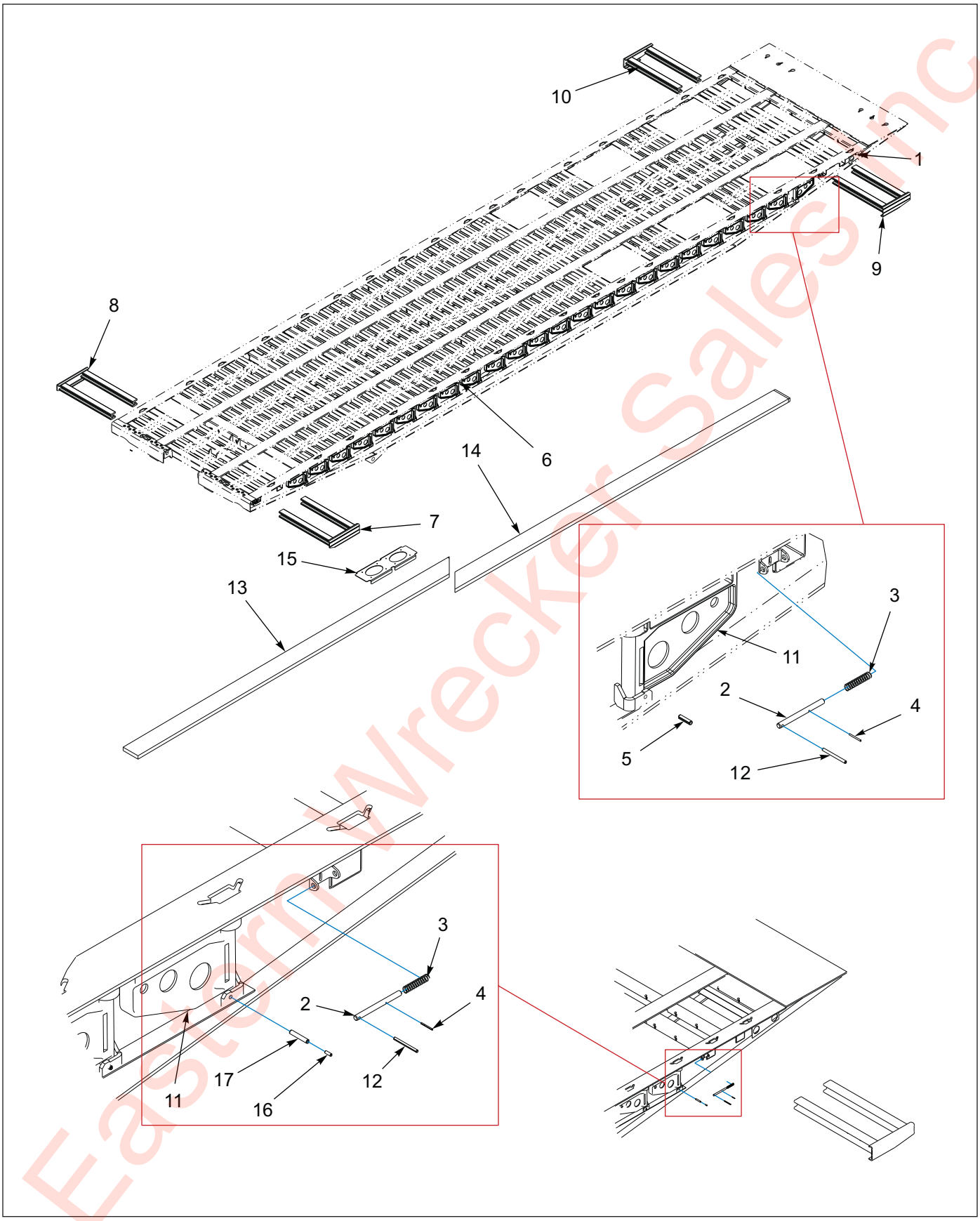

Figure 1-155: Outrigger Installation

Eastern Wrecker Sales Inc

Outrigger Installation

ITEM	PART NO.	DESCRIPTION	QTY.					
	128020	OUTRIGGER INSTALLATION, 455-50	- -					
	136399	OUTRIGGER INSTALLATION, 455-53		- -				
	137894	OUTRIGGER INSTALLATION, 440-48			- -			
	150188	OUTRIGGER INSTALLATION, 440-53				- -		
	152673	OUTRIGGER INSTALLATION, 440-41					- -	
	141628	OUTRIGGER PLANKS						- -
1	1-343-010007	GROMMET	2	2	--	--	--	--
2	128539	PIN, SLIDE LOCK	4	4	4	4	4	--
3	104253	SPRING, COMPRESSION P/O EXT LOCK	4	4	4	4	4	--
4	125520	ROLL PIN, SLOTTED 1/8 X 1-1/2	4	4	4	4	4	--
5	0600-375-01500	ROLL PIN, SLOTTED 3/8 X 1-1/2	48	52	--	--	--	--
6	-----	FRAME WELDMENT	- -	- -	- -	- -	- -	- -
7	128226	PULLOUT WELDMENT FRONT LH	1	1	--	--	--	--
7	137892	PULLOUT WELDMENT ALUM FRT LH	--	--	1	1	1	--
8	128227	PULLOUT WELDMENT FRONT RH	1	1	--	--	--	--
8	137893	PULLOUT WELDMENT ALUM FRT RH	--	--	1	1	1	--
9	128228	PULLOUT WELDMENT REAR LH	1	1	1	1	1	--
10	128229	PULLOUT WELDMENT REAR RH	1	1	1	1	1	--
11	167-0022	OUTRIGGER CAST FOR 10 CHANNEL	48	52	44	52	34	--
12	1-647-010004225	ROLL PIN, SLOTTED 1/4 X 3	4	4	4	4	4	--
13	141629	PLANK, OUTRIGGER FRONT	--	--	--	--	--	2
14	141636	PLANK, OUTRIGGER REAR	--	--	--	--	--	2
15	141637	SUPPORT, OUTRIGGER PLANK	--	--	--	--	--	2
16	127711	ROLL PIN, SLOTTED 1/4 X 3/4	--	--	44	52	34	--
17	127712	ROLL PIN, SLOTTED 3/8 X 2-1/4	--	--	44	52	34	--

Eastern Wrecker Sales Inc

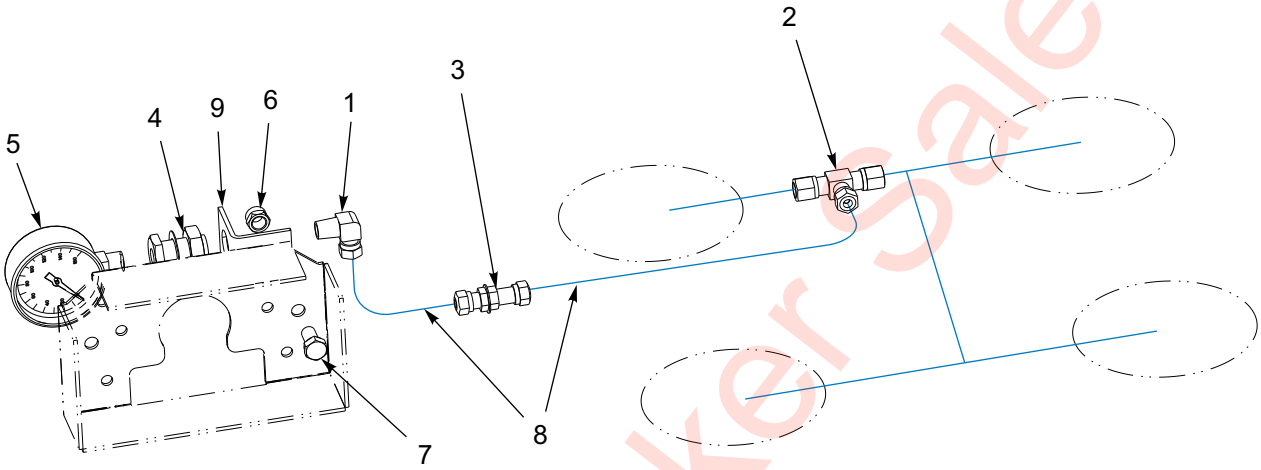

Figure 1-156: Suspension Pressure Gauge Installation

Suspension Pressure Gauge Installation

ITEM	PART NO.	DESCRIPTION	QTY.
	128601	PRESSURE GAUGE INSTALLATION	- -
1	1-297-010008-07	FITTING, AIR 90	1
2	1-297-010010-04	FITTING, AIR UNION TEE	1
3	1-297-010014-02	FITTING, AIR	1
4	1-297-010022-02	FITTING, AIR ANCHOR	1
5	1-323-010008	GAUGE, PRESSURE 0 - 160 PSI	1
6	1-512-010005-05	NUT, HEX LOCK 3/8-16 GRB	1
7	1-654-010051-03	SCREW, HEX HEAD CAP 3/8-16 X 3/4 GR5	1
8	1-833-010002	TUBING NYLON 3/8	- -
9	3-120-010445	BRACKET, PRESSURE REGULATOR	1

Eastern Wrecker Sales Inc

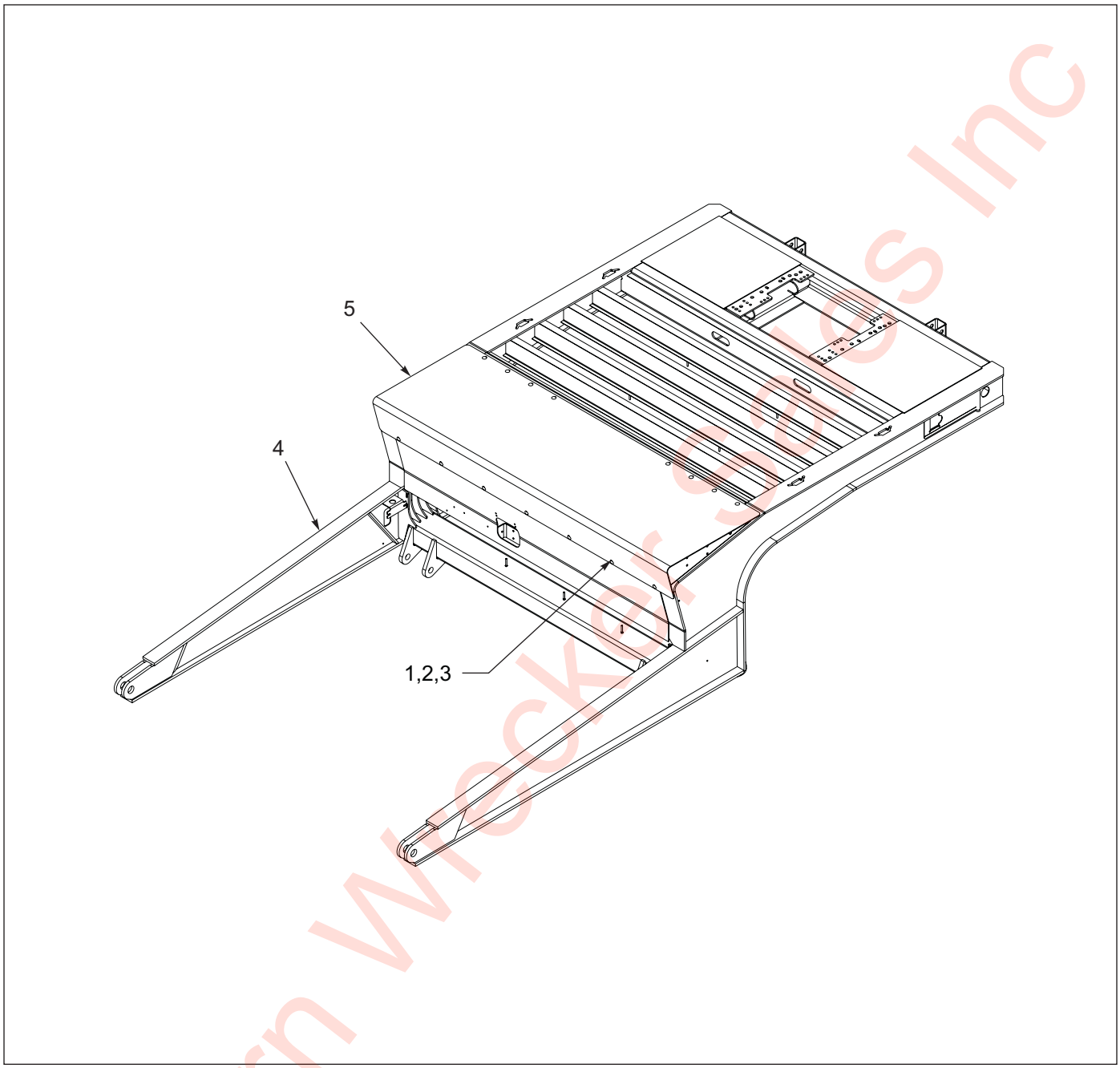

Figure 1-157: Slope Filler Deck Installation

Slope Filler Deck Installation

ITEM	PART NO.	DESCRIPTION	QTY.
	150954	SLOPE FILLER DECK INSTALLATION	- -
	150965	GALVANIZED SLOPE FILLER DECK INSTALLATION	- -
1	1-510-010003-09	NUT, FLANGE HEAD SERRATED 1/2-13	15
2	1-654-010070-03	SCREW, RD HEAD SQ NECK 1/2-13 X 1-1/2	15
3	1-861-010032-15	WASHER, FLAT 1/2W	15
4	213978	G/N WLDMT 400B TOP TLBX	- -
5	150950	SLOPE FILLER WELDMENT **(SPECIFY GALVANIZED OR PAINTED)**	1

Eastern Wrecker Sales Inc

Eastern Wrecker Sales Inc

Index

Symbols

#242 LOCKTITE 1-91, 1-137

Numerics

0013007 1-213
0047008 1-224
005-074-00 1-93
005-079-00 . . . . . 1-93, 1-103
005-096-00 1-103
005-097-00 1-103
006-115-00 . . . . . 1-90, 1-97, 1-99, 1-107
007-139-00 . . . . . 1-93, 1-104
010700437 1-206
014-065-00 1-103
014-068-00 . . . . . 1-93, 1-103
034-031-00 1-93
034-032-00 . . . . . 1-93, 1-104
034-047-00 1-104
034-048-00 . . . . . 1-93, 1-103
034-188-03 1-93
034-189-03 1-93
034-192-05 1-103
034-193-05 1-103
040-180-00 1-103
046-096-00 1-103
046-097-00 . . . . . 1-93, 1-103
056-017-00 . . . . . 1-93, 1-103
056-018-00 . . . . . 1-93, 1-103
0600-375-01500 1-267
061-003-00 . . . . . 1-93, 1-103
069-078-00 . . . . . 1-93, 1-103
071-122-00 1-103
1/2X3/8BUSH 1-115
100276 1-166
100279 1-166
10030 1-190
100348 . . . . . 1-161, 1-162, 1-163, 1-166
100402 1-87
100600 . . . . . 1-6, 1-127, 1-133, 1-137
1-007-010006 . . . . . 1-197, 1-199
1-007-010025 1-244
1-007-010058 . . . . . 1-162, 1-163
10078 . . . . . 1-130, 1-141
100823 1-13
100939 1-11
100941 1-40
100949 . . . . . 1-19, 1-109, 1-111, 1-113, 1-115
10109 1-191
101386 . . . . . 1-240, 1-246
101528 . . . . . 1-47, 1-49, 1-53, 1-56, 1-60, 1-65
101847 . . . . . 1-93, 1-103, 1-116
101848 1-116
101849 . . . . . 1-103, 1-116
101855 1-6
102-0031 . . . . . 1-159, 1-205, 1-222
102-1089 1-224
102-1097 1-159
102-1238 . . . . . 1-159, 1-205, 1-222
102-1333 . . . . . 1-205, 1-222
102186 1-133
102187 1-137
102188 1-137
102361 1-82
102363 . . . . . 1-40, 1-44, 1-71, 1-82
102364 1-82
102732 . . . . . 1-67, 1-74
103055 1-40
103056 . . . . . 1-40, 1-44
103082 . . . . . 1-229, 1-230

Eastern Wrecker Sales Inc

103-0924 1-213
103103-002 . . . . . 1-90, 1-97, 1-99, 1-107
103166 1-159
103805 . . . . . 1-93, 1-103
103817 . . . . . 1-44, 1-113, 1-222
103841 . . . . . 1-15, 1-21, 1-232
103861 1-116
104034 . . . . . 1-40, 1-44
104-1003 1-130
104243 1-154
104253 1-267
1046 1-145
105106 . . . . . 1-90, 1-97, 1-99, 1-107
105107 . . . . . 1-90, 1-97, 1-107
105408 1-82
105479 . . . . . 1-26, 1-190, 1-197, 1-199, 1-200
105480 . . . . . 1-26, 1-190, 1-197, 1-199, 1-200
105481 . . . . . 1-26, 1-190, 1-197, 1-199, 1-200
105482 . . . . . 1-26, 1-190, 1-197, 1-199, 1-200
105483 1-26
105822 . . . . . 1-6, 1-200
105902 1-200
106-0006 1-123
106759 . . . . . 1-197, 1-199
106760 . . . . . 1-197, 1-199
106956 1-141
107368 . . . . . 1-137, 1-143
107369 . . . . . 1-137, 1-143
107464 1-224
107470 1-237
107498 1-197
107499 1-197
107500 1-197
107513 . . . . . 1-197, 1-199
107956 . . . . . 1-113, 1-115
108295 1-190
108417 . . . . . 1-34, 1-113, 1-209
108439 . . . . . 1-147, 1-151
108601 1-190
108610 1-11
108801 . . . . . 1-19, 1-26, 1-137, 1-147, 1-151
108802 . . . . . 1-19, 1-26
109161 1-157
109207 1-237
109209 1-19
109533 1-82
109711 1-157
109712 1-157
1-1/4ST ELL 1-197
110-0116 1-190
110-0253 1-190
11011 1-129
110435 1-11
110448 1-142
110449 1-130
110450 1-129
110451 1-142
110452 . . . . . 1-130, 1-142
110453 1-130
110578 1-190
1-108 1-2
110975 1-107
110976 . . . . . 1-104, 1-107
111008 1-82
111010 1-82
111011 1-82
111012 1-82
111013 1-82
111014 1-82
111015 1-82
111016 1-82
111017 . . . . . 1-82, 1-85
111018 1-82
111021 1-74
111022 1-82
111023 1-82

Eastern Wrecker Sales Inc

11117 1-129
111276 . . . . . 1-215, 1-217, 1-218
11128 1-129
11129 1-129
11130 1-129
11133 1-129
111416 1-87
111417 1-87
11142 1-129
11144 1-129
111652 1-87
1-118 1-2
111870 1-206
112047 1-87
11240 1-130
112492 1-97
1-126 1-2
112678 1-154
112679 1-154
112819 1-113
11308 1-129
11309 1-141
11310 1-141
113109 1-107
113536 . . . . . 1-97, 1-107
11368 1-129
113819 . . . . . 1-93, 1-103
113856 1-190
11398 1-142
11402 1-141
11407 1-141
11411 1-141
11419 1-141
11420 1-141
11421 1-141
11425 1-141
11426 1-142
11429 1-141
11430 1-141
11431 1-141
11434 1-141
11440 1-141
11441 1-141
11446 1-141
114584 . . . . . 1-109, 1-116
114585 . . . . . 1-111, 1-115
114586 . . . . . 1-113, 1-116
114588 1-116
114619 1-97
114814 . . . . . 1-11, 1-190
114815 1-190
114983 1-157
1-154 1-2
115629 1-119
115738 1-82
115851 1-130
115877 . . . . . 1-11, 1-190
11599 1-141
116324 . . . . . 1-35, 1-171
116326 1-191
116328 1-191
116330 1-191
116378 1-127
1-168 1-2
116800 1-157
116822 1-13
116943 1-11
1-17 1-2
117304 . . . . . 1-109, 1-111, 1-113, 1-115
117386 1-21
117556 1-13
117558 1-155
117559 1-155
117561 1-155
117562 1-13
117565 1-11

Eastern Wrecker Sales Inc

117873 1-191
11791 1-142
1-180 1-2
1-181-010046-7 1-190
118-2658-10 1-199
118-2659-1 . . . . . 1-47, 1-56
118-2659-9 . . . . . 1-109, 1-111, 1-115
11837 1-129
118627 1-21
118853 1-11
118889 1-13
118897 1-40
119206 1-191
119445 1-191
119580 . . . . . 1-40, 1-44
119621 1-137
119622 1-137
119949 1-155
120384 1-191
120492 1-245
120659 1-191
120660 1-191
120661 1-191
12073 1-141
12075 1-129
121077 . . . . . 1-40, 1-44, 1-82, 1-119, 1-121
121402 . . . . . 1-161, 1-163
12146 1-142
121498 . . . . . 1-40, 1-161
12-16 070120 . . . . . 1-197, 1-199
121686 1-44
122154 . . . . . 1-217, 1-218
122187 1-35
122540 . . . . . 1-161, 1-162
122557 1-19
1-226 1-2
122621 1-21
122813 1-159
123150 1-15
123210 1-254
1-242-010178-2 1-206
1-242-010180-2 . . . . . 1-203, 1-205, 1-206
124511 1-29
124549 1-141
124559 1-40
12465 1-141
124971 . . . . . 1-193, 1-245
125130 . . . . . 1-197, 1-199
125520 1-267
125648 . . . . . 1-205, 1-222
125799 1-171
125892 1-137
126292 1-103
126537 1-163
126609 1-245
126900 1-82
127422 1-15
12767 1-142
127691 1-15
127708 1-85
127711 1-267
127712 1-267
127777 1-93
12783 1-141
128020 1-267
128137 1-169
128138 1-169
128152 1-169
128153 1-169
12817 1-129
128226 1-267
128227 1-267
128228 1-267
128229 1-267
128414 1-169
128539 1-267

Eastern Wrecker Sales Inc

128601 1-268
128670 1-44
128774 1-191
129005 1-82
129006 1-82
129264 1-191
1-295-010001 . . . . . 1-190, 1-197, 1-199
1-295-010002 . . . . . 1-197, 1-199
1-297-010007-04 1-138
1-297-010007-05 . . . . . 1-138, 1-147, 1-151
1-297-010007-11 . . . . 1-67, 1-69, 1-71, 1-73, 1-226, 1-227, 1-228
1-297-010007-12 . . . . . 1-19, 1-109, 1-113, 1-115
1-297-010007-14 1-111
1-297-010007-15 1-113
1-297-010007-16 . . . . . 1-19, 1-27
1-297-010008-05 . . 1-71, 1-73, 1-119, 1-121, 1-138
1-297-010008-07 . . . . 1-67, 1-69, 1-71, 1-73, 1-119, 1-121, 1-138, 1-147, 1-151, 1-268
1-297-010008-18 . . 1-71, 1-73, 1-109, 1-111, 1-113, 1-115
1-297-010008-20 . . . . . 1-111, 1-115
1-297-010008-22 1-115
1-297-010008-23 1-109
1-297-010008-24 . . . . . 1-109, 1-111, 1-113, 1-115
1-297-010008-26 . . . . . 1-109, 1-111, 1-113, 1-115
1-297-010009-02 . . . . . 1-226, 1-227
1-297-010010-01 1-67, 1-69, 1-71, 1-73, 1-119, 1-121
1-297-010010-03 . . . . . 1-71, 1-73
1-297-010010-04 . . . . 1-67, 1-69, 1-71, 1-73, 1-226, 1-227, 1-228, 1-229, 1-230, 1-268
1-297-010011-02 1-138
1-297-010013-12 1-27
1-297-010013-16 . . . . . 1-113, 1-115
1-297-010014-02 . . . . . 1-228, 1-268
1-297-010015-02 . . . . . 1-71, 1-73
1-297-010015-03 . . . . . 1-71, 1-73
1-297-010017-03 . . . . . 1-109, 1-111, 1-113, 1-115
1-297-010018-03 . 1-19, 1-113, 1-115, 1-138, 1-147, 1-151
1-297-010018-04 . . . . 1-67, 1-69, 1-71, 1-73, 1-109, 1-111, 1-115
1-297-010019-05 . . . . . 1-138, 1-147, 1-151
1-297-010020-02 1-138
1-297-010021-05 1-19
1-297-010022-02 . . . . . 1-138, 1-268
1-297-010022-03 1-19
1-297-010022-04 1-19
1-297-010031-02 1-138
1-297-010032-03 1-138
1-297-010033-03 1-19
1-298-010001-1 . . . 1-11, 1-13, 1-224, 1-250, 1-256, 1-261
129893 1-213
129894 1-213
13028 . . . . . 1-130, 1-142
130280 1-232
130282 1-232
130537 1-246
130538 1-246
130540 1-246
130556 1-40
130644 . . . . . 1-205, 1-222
130662 1-259
130794 1-40
130851 1-162
130895 1-169
130896 1-169
131105 1-13
131195 1-264
131196 1-11
1-316-010013 1-190
131895 1-250
1-32 1-2
1-323-010008 1-268
132833 . . . . . 1-151, 1-153
13424 . . . . . 1-130, 1-142

Eastern Wrecker Sales Inc

1-343-010006 . . . . . 1-34, 1-171, 1-178
1-343-010007 . . . . . 1-215, 1-217, 1-218, 1-267
1-343-010011 1-219
134608 1-169
134616 1-169
134657 . . . . . 1-147, 1-151
13468 1-129
134757 1-87
134857 1-194
135181 1-11
135184 1-137
136352 1-11
136396 1-245
136399 1-267
136578 1-194
136580 1-193
136581 1-193
136582 1-193
13680 1-130
136828 1-245
136829 1-245
136848 1-169
136849 1-169
136991 1-93
136992 1-93
137108 1-107
137461 1-103
137485 1-103
137486 1-29
137559 1-209
137634 1-244
137635 1-244
137892 1-267
137893 1-267
137894 1-267
137943 1-193
137974 1-157
137987 . . . . . 1-147, 1-151
1-38 1-2
138054 1-94
138090 1-103
138155 . . . . . 1-161, 1-163
1-382-010035-06 1-151
138209 1-191
13839 1-129
1-384-010038024 . . . . . 1-113, 1-115
1-384-010038038 . . . . . 1-113, 1-115
1-384-010038056 . . . . . 1-109, 1-111
1-384-010038060 . . . . . 1-113, 1-115
1-384-010038076 . . . . . 1-113, 1-115
1-384-010038084 1-113
1-384-010038204 1-113
138719 1-93
139132 1-213
139133 1-213
139201 1-84
139254 1-244
139256 1-155
139383 1-103
1-394-010001 . . . . . 1-109, 1-111, 1-162
1-394-010002 1-163
139478 1-142
139479 1-141
139525 . . . . . 1-147, 1-151
139552 1-138
139600 1-87
139603 1-175
1-397-010262028 1-163
1-397-010262100 1-163
1-397-010262-5 . . . . . 1-161, 1-162, 1-163
1-397-010301064 1-17
1-397-010301100 . . . . . 1-197, 1-199
1-397-010301170 . . . . . 1-127, 1-133, 1-138
1-397-010302070 1-17
1-397-010302172 . . . . . 1-127, 1-133, 1-138
1-397-010302220 1-147

Eastern Wrecker Sales Inc

1-397-010304018 1-190
1-397-010304060 1-191
1-397-010305190 1-17
1-397-010305216 1-17
1-397-010312032 1-190
1-397-010313021 1-199
1-4 1-2
140802 1-137
140829 1-40
140851 1-11
1410119 1-17
1410792 1-191
141607 . . . . . 1-15, 1-19, 1-27, 1-227, 1-228
141609 . . . . . 1-11, 1-13
141628 1-267
141629 1-267
141636 1-267
141637 1-267
141708 1-85
142050 1-21
142053 1-21
1422072 1-17
1422896 . . . . . 1-205, 1-222
142545 . . . . . 1-47, 1-49, 1-53, 1-56, 1-60, 1-65
142547 1-97
142550 1-97
142553 . . . . . 1-47, 1-49
142565 1-44
142895 1-226
143100 . . . 1-34, 1-173, 1-177, 1-214, 1-226, 1-227, 1-228, 1-229, 1-230
143101 . . . . 1-34, 1-36, 1-173, 1-177, 1-183, 1-214, 1-226, 1-227, 1-228, 1-229, 1-230
143102 . . . . . 1-34, 1-183, 1-184, 1-214
143103 . . . 1-34, 1-119, 1-121, 1-123, 1-183, 1-184, 1-209, 1-214
143114 . . . . . 1-171, 1-209
143121 1-34
143123 1-34
143163 . . . . . 1-17, 1-26
143166 1-35
143167 1-173
143246 1-137
143688 . . . . . 1-56, 1-60
143850 1-191
144608 1-180
144979 1-93
145104 1-11
145532 1-44
145538 1-184
145588 . . . . . 1-255, 1-259
145589 1-259
145598 1-252
145599 1-252
146707 . . . . . 1-205, 1-222
146897 1-183
146929 . . . . . 1-173, 1-183
147464 1-116
147468 1-192
147469 1-192
147471 1-192
148241 . . . . . 1-127, 1-133
148576 1-213
148585 1-183
149007 1-222
149011 1-222
149012 1-222
149051 1-19
149543 1-226
150072 1-209
150074 1-209
150076 1-11
150093 . . . . 1-34, 1-36, 1-173, 1-177, 1-211, 1-226, 1-227, 1-228, 1-229, 1-230
150111 . . . . . 1-34, 1-147, 1-180, 1-184
150114 1-180
150116 . . . . . 1-184, 1-213

Eastern Wrecker Sales Inc

150117 . . . *1-34, 1-147, 1-151, 1-171, 1-173, 1-177, 1-178, 1-180, 1-211, 1-219, 1-247*
150188 . . . . . *1-267*
150329 . . . . . *1-209*
150346 . . . . . *1-87*
150950 . . . . . *1-269*
150954 . . . . . *1-269*
150965 . . . . . *1-269*
1-510-010001 . . *1-11, 1-15, 1-40, 1-44, 1-90, 1-109, 1-111, 1-113, 1-115, 1-161, 1-162, 1-163, 1-222, 1-239, 1-264*
1-510-010003-09 . . . . . *1-21, 1-269*
1-510-010004-03 . . . . . *1-11*
1-511-010001-14 . . . . . *1-44*
1-512-010002-09 . . . . . *1-147, 1-151*
1-512-010003-02 . . . . . *1-34*
1-512-010003-14 . . . . . *1-115*
1-512-010004-03 . . . . . *1-137, 1-190*
1-512-010004-05 . . . . . *1-182*
1-512-010005-01 *1-11, 1-15, 1-34, 1-56, 1-60, 1-67, 1-74, 1-119, 1-121, 1-183, 1-184, 1-213, 1-215, 1-226, 1-227, 1-228, 1-229, 1-230, 1-235*
1-512-010005-03 . . *1-11, 1-34, 1-147, 1-151, 1-159, 1-203, 1-222*
1-512-010005-05 . . . *1-29, 1-53, 1-65, 1-109, 1-111, 1-113, 1-115, 1-127, 1-133, 1-138, 1-155, 1-169, 1-175, 1-190, 1-197, 1-199, 1-215, 1-217, 1-218, 1-235, 1-237, 1-239, 1-268*
1-512-010005-09 . . *1-11, 1-44, 1-127, 1-133, 1-137, 1-143, 1-161, 1-162, 1-163, 1-169, 1-171, 1-177, 1-190, 1-192, 1-194, 1-197, 1-239, 1-240, 1-250, 1-252, 1-253, 1-255, 1-256, 1-259, 1-261, 1-262, 1-263*
1-512-010005-13 . *1-44, 1-137, 1-154, 1-155, 1-199, 1-203, 1-246*
1-512-010005-15 . . . . . *1-84, 1-233, 1-254*
1-512-010005-19 . . . . . *1-193, 1-232*
1-512-010007-03 . . . . . *1-34, 1-71, 1-171, 1-242*
1-512-010007-05 *1-11, 1-40, 1-44, 1-69, 1-71, 1-73, 1-93, 1-103, 1-137, 1-143*
1-512-010007-09 . . . . . *1-82*
1-512-010007-12 . . . . . *1-137*
151818 . . . . . *1-261*
152673 . . . . . *1-267*
153102 . . . . . *1-171*
153366 . . . . . *1-99*
153402 . . . . . *1-90, 1-99*
153408 . . . . . *1-99*
153409 . . . . . *1-90, 1-99*
153754 . . . . . *1-169*
153755 . . . . . *1-169*
154166 . . . . . *1-141*
155411 . . . . . *1-261*
1-557-010014 . . . . . *1-169*
1-557-010362-54 . . . . . *1-15*
1-557-010362-63 . . . . . *1-169, 1-175, 1-192, 1-224*
1-557-010403 . . . . . *1-249*
155780 . . . . . *1-6*
1-560-010002-02 . . . . . *1-109, 1-113*
1-560-010002-03 . . . . . *1-109, 1-190*
1-560-010002-04 . *1-27, 1-109, 1-111, 1-113, 1-115, 1-197*
1-560-010002-05 . *1-109, 1-111, 1-113, 1-115, 1-197*
1-560-010002-07 . . . . . *1-197, 1-199*
156010 . . . . . *1-6*
157662 . . . . . *1-199*
157663 . . . . . *1-199*
157664 . . . . . *1-199*
157702 . . . . . *1-124*
157703 . . . . . *1-124*
1-578-010015-04 . . . . . *1-171*
1-58 . . . . . *1-2*
158581 . . . . . *1-29*
159001 . . . . . *1-104*
161150 . . . . . *1-255, 1-256*
161151 . . . . . *1-256*
161153 . . . . . *1-256*
161154 . . . . . *1-256*
161155 . . . . . *1-255*
162207 . . . . . *1-148, 1-152*
162208 . . . . . *1-148*

Eastern Wrecker Sales Inc

162210 . . . . . 1-148, 1-152
162211 . . . . . 1-148, 1-152
162213 1-148
162214 1-148
162215 . . . . . 1-148, 1-152
162216 . . . . . 1-148, 1-152
162217 1-152
162218 . . . . . 1-148, 1-152
162219 . . . . . 1-148, 1-152
162258 1-261
162259 1-261
162260 1-261
162415 1-137
162941 . . . . . 1-148, 1-152
162942 1-153
162943 1-153
162944 1-153
1-630-010021-01 1-15
1-630-010021-02 1-11
163472 1-141
163502 1-157
163769 1-254
163770 1-254
163790 1-233
163791 1-233
163996 . . . . . 1-171, 1-173, 1-178, 1-219, 1-247
164052 1-34, 1-36, 1-173, 1-177, 1-178, 1-219, 1-247
164053 . . . . . 1-147, 1-151, 1-182
164434 1-264
1-647-010004225 1-267
1-647-010004255 . . . . . 1-11, 1-137
1-654-010024055 . . . . . 1-34, 1-36, 1-137
1-654-010027-7 1-15
1-654-010032-4 . . . . . 1-40, 1-44
1-654-010036-05 1-137
1-654-010047-03 . . . . . 1-215, 1-235
1-654-010047-04 . . . 1-67, 1-71, 1-74, 1-121, 1-199, 1-209, 1-228
1-654-010047-06 . . 1-11, 1-34, 1-119, 1-182, 1-183, 1-184, 1-190, 1-213
1-654-010047-07 . . 1-56, 1-60, 1-226, 1-227, 1-229, 1-230
1-654-010047-09 . . . . . 1-11, 1-69, 1-73
1-654-010049-03 . . . . . 1-29, 1-90, 1-97, 1-99, 1-107
1-654-010049-05 . 1-11, 1-147, 1-151, 1-159, 1-203, 1-222
1-654-010049-06 1-34
1-654-010051-03 1-268
1-654-010051-05 . . 1-11, 1-90, 1-155, 1-235, 1-237, 1-239
1-654-010051-06 . . 1-12, 1-90, 1-115, 1-127, 1-133, 1-169, 1-190, 1-197, 1-264
1-654-010051-07 . . . 1-15, 1-40, 1-44, 1-175, 1-199, 1-213, 1-244
1-654-010051-08 . 1-109, 1-111, 1-113, 1-115, 1-215
1-654-010051-09 1-190
1-654-010051-10 . . . . . 1-29, 1-53, 1-65, 1-155
1-654-010051-14 . . . . . 1-217, 1-218
1-654-010051-15 1-175
1-654-010055-01 . . . . . 1-137, 1-143
1-654-010055-02 . . . . . 1-21, 1-177, 1-194, 1-245
1-654-010055-03 . 1-44, 1-137, 1-162, 1-163, 1-169, 1-171, 1-190, 1-192, 1-193, 1-197, 1-199, 1-239, 1-240, 1-256, 1-259, 1-261, 1-262, 1-263
1-654-010055-04 1-127, 1-130, 1-133, 1-137, 1-171, 1-197, 1-255, 1-261
1-654-010055-05 . . . . . 1-137, 1-252, 1-253
1-654-010055-09 1-194
1-654-010055-10 . . . . . 1-193, 1-261
1-654-010055-11 1-12
1-654-010055-13 . . . . . 1-169, 1-190, 1-250
1-654-010055-16 . . . . . 1-127, 1-133
1-654-010059-01 . . . . . 1-44, 1-161, 1-162, 1-163
1-654-010059-03 . . . . . 1-154, 1-155, 1-203
1-654-010059-05 . . . . . 1-154, 1-199, 1-203
1-654-010059-11 . . . . . 1-203, 1-246
1-654-010059-15 1-137
1-654-010061-03 1-21
1-654-010061-05 . . . . . 1-233, 1-254

Eastern Wrecker Sales Inc

1-654-010061-07 1-15
1-654-010065-15 1-232
1-654-010070-03 1-269
1-654-010141-04 1-137
1-654-010147-06 1-12
1-654-010158-02 . . . . . 1-35, 1-113
1-654-010158-1 . . . . . 1-12, 1-34, 1-40, 1-44
1-656-010003051 . . . 1-34, 1-71, 1-73, 1-171, 1-242
1-656-010003053 1-171
165768 1-166
165769 1-166
1-660-010006 1-36
166002 1-226
166352 1-17
166766 1-191
166767 1-263
166768 1-263
166821 1-226
166872 1-209
167-0022 1-267
167521 1-148
167522 1-147
167965 1-213
167975 1-171
168593 . . . . . 1-119, 1-123
168610 . . . . . 1-119, 1-121, 1-123
168611 1-123
168612 1-123
168613 . . . . . 1-119, 1-121, 1-123
168614 1-123
168616 1-123
168617 1-123
168618 1-123
169255 1-224
169258 1-224
169365 1-26
169531 1-191
169532 1-191
169534 1-182
169628 1-205
169639 1-232
169641 1-232
169836 1-224
169845 . . . . . 1-222, 1-224
169848 1-222
169849 1-222
169853 . . . . . 1-173, 1-177, 1-178, 1-219, 1-247
169865 1-222
170109 1-191
170110 1-191
170111 1-191
170112 1-191
170120 1-85
170470 1-228
170471 1-228
171159 1-228
171166 1-253
171167 1-253
171942 1-44
171963 1-93
171964 1-93
172437 1-226
172804 1-239
172865 1-205
172877 1-152
172878 1-151
172882 . . . . . 1-215, 1-217, 1-218
172980 1-222
173860 1-191
173875 . . . . . 1-69, 1-73
173876 1-69
174043 . . . . . 1-147, 1-151
174061 1-235
174092 1-235
174139 1-182
174140 1-182

Eastern Wrecker Sales Inc

174141 1-182
174142 1-182
174143 . . . . . 1-111, 1-115
174175 1-147
174179 1-161
174181 1-161
174184 1-161
174185 1-161
174188 . . . . . 1-147, 1-151
174241 . . . . . 1-111, 1-115
174253 1-246
174254 1-246
174265 1-222
174266 1-222
174552 1-151
174553 1-147
174597 1-264
174598 1-242
175029 1-222
175358 1-227
175359 . . . . . 1-227, 1-229, 1-230
175360 1-227
175363 1-227
175364 . . . . . 1-229, 1-230
175365 . . . . . 1-227, 1-229, 1-230
175617 . . . . . 1-222, 1-224
175620 1-224
175625 1-240
175632 1-240
175989 1-242
176069 1-11
176072 1-44
176420 . . . . . 1-214, 1-215
176421 1-215
176424 . . . . . 1-215, 1-217, 1-218
176425 . . . . . 1-215, 1-217, 1-218
176432 1-214
176440 1-215
176473 1-124
176476 1-124
176477 1-124
176478 1-124
176479 1-124
178384 1-215
178389 . . . . . 1-215, 1-217, 1-218
178393 1-235
178400 1-222
178428 1-191
178444 . . . . . 1-11, 1-159, 1-203, 1-222
178592 1-123
178638 1-191
178714 1-152
178715 . . . . . 1-148, 1-152
178716 1-152
178717 1-153
178718 1-148
178999 1-148
179000 1-148
179001 1-148
179089 1-214
179090 1-191
179107 1-85
179108 1-85
1-796-010002-01 1-36
1-796-010003-01 1-53
1-796-010003-02 . . . . . 1-111, 1-159, 1-222
1-796-010004-02 . . . . . 1-69, 1-73
179902 . . . . . 1-180, 1-209
179906 1-35
179933 1-233
179955 . . . . . 1-90, 1-97, 1-107
1-8 1-2
18002 . . . . . 1-130, 1-142
18009 1-129
18015 1-129
18016 1-129

Eastern Wrecker Sales Inc

18019 1-129
18020 1-129
18022 1-141
180221 1-227
180222 1-123
180223 1-123
180224 1-123
180225 1-123
180227 1-123
180228 1-123
180229 1-123
18024 1-129
18026 1-129
18027 1-129
18028 1-129
18029 1-130
18030 1-129
18032 1-129
18033 1-141
18034 1-141
18035 1-141
18039 1-129
18044 1-129
18047 . . . . . 1-129, 1-141
180538 1-264
180539 1-264
18056 1-130
180570 1-209
18078 1-129
1-822-010001 . . . . . 1-12, 1-159, 1-223
1-822-010002 . . . . . 1-178, 1-190
1-833-010001 . . 1-67, 1-69, 1-71, 1-73, 1-119, 1-121, 1-123, 1-138, 1-147, 1-151, 1-228
1-833-010002 . . 1-19, 1-67, 1-69, 1-71, 1-73, 1-109, 1-111, 1-113, 1-115, 1-268
1-833-010003 . . . . 1-19, 1-109, 1-111, 1-113, 1-115
183413 . . . . . 1-34, 1-119, 1-121, 1-123, 1-211
1-84 1-2
184138 1-40
1-843-010014 . . . . . 1-40, 1-87
184392 1-227
184393 1-226
184501 . . . . . 1-171, 1-173
184585 . . . . . 1-29, 1-203, 1-222
185038 1-246
185216 . . . . . 1-203, 1-223
1-861-010032-01 1-34
1-861-010032-03 . . . . . 1-171, 1-242
1-861-010032-04 1-36
1-861-010032-06 1-12
1-861-010032-07 . 1-12, 1-35, 1-40, 1-44, 1-56, 1-60, 1-69, 1-71, 1-73, 1-119, 1-121, 1-182, 1-183, 1-184, 1-199, 1-226, 1-227, 1-228, 1-229, 1-230, 1-235
1-861-010032-08 . . . 1-12, 1-29, 1-159, 1-203, 1-222
1-861-010032-09 . . . . . 1-34, 1-147, 1-151
1-861-010032-10 . . . 1-29, 1-53, 1-65, 1-127, 1-133, 1-137, 1-199, 1-203, 1-215, 1-217, 1-218, 1-222, 1-237, 1-239
1-861-010032-11 . . . . 1-12, 1-15, 1-40, 1-44, 1-109, 1-111, 1-113, 1-115, 1-155, 1-169, 1-175, 1-190, 1-213, 1-244, 1-249, 1-264
1-861-010032-14 1-137, 1-143, 1-147, 1-151, 1-161, 1-162, 1-163, 1-177, 1-192, 1-240
1-861-010032-15 . . 1-21, 1-40, 1-127, 1-133, 1-137, 1-169, 1-171, 1-190, 1-193, 1-194, 1-239, 1-240, 1-245, 1-252, 1-253, 1-255, 1-261, 1-269
1-861-010032-18 . . . . . 1-137, 1-199
1-861-010032-19 . . . . . 1-155, 1-203
1-861-010032-20 . . . . . 1-84, 1-233, 1-254
1-861-010032-21 . . . . . 1-84, 1-85, 1-232
1-861-010032-29 1-15
1-861-010034-07 . . . . . 1-71, 1-171, 1-242
1-861-010034-09 . 1-12, 1-40, 1-44, 1-69, 1-71, 1-73, 1-138, 1-143, 1-190
1-861-010034-10 . . . . . 1-29, 1-90, 1-97, 1-99, 1-107
1-861-010034-11 . . . . . 1-90, 1-169, 1-244
1-861-010034-13 . 1-82, 1-127, 1-130, 1-133, 1-190, 1-197, 1-199
1-861-010034-15 . . . . . 1-91, 1-161, 1-162, 1-163

Eastern Wrecker Sales Inc

1-861-010034-17 1-40
186807 . . . . . 1-15, 1-17, 1-24
186811 1-191
186834 . . . . . 1-21, 1-22
186835 . . . . . 1-21, 1-23
186861 1-223
186875 . . . . . 1-29, 1-159, 1-203, 1-223
186877 . . . . . 1-29, 1-159, 1-203, 1-223
186878 . . . . . 1-159, 1-203, 1-223
186885 . . . . . 1-29, 1-31, 1-36
186886 1-15, 1-17, 1-29, 1-159, 1-203, 1-205, 1-223
186889 1-159
186890 . . . . . 1-11, 1-203
186900 1-203
186901 . . . . . 1-159, 1-171, 1-178
186902 . . . . . 1-29, 1-159, 1-203, 1-223
187585 1-205
187787 1-224
187790 1-224
187833 . . . . . 1-34, 1-216
187855 . . . . . 1-34, 1-216
187856 . . . . . 1-34, 1-211, 1-216
187857 . . . . . 1-34, 1-211
187858 1-34
187859 . . . . . 1-35, 1-173, 1-180, 1-209
187860 . . . . . 1-35, 1-209
187863 . . . . . 1-216, 1-217, 1-218
187864 . . . . . 1-209, 1-217, 1-218
187868 1-34
187869 1-180
188995 1-211
189015 . . . . . 1-159, 1-247
189253 . . . . . 1-6, 1-11
189256 1-29
189258 . . . . . 1-15, 1-21
189259 . . . . . 1-15, 1-17, 1-21
189260 . . . . . 1-159, 1-167, 1-203, 1-205, 1-223
189261 . . . . . 1-15, 1-21
189262 . . . . . 1-15, 1-21
189263 . . . . . 1-21, 1-23
189264 . . . . . 1-21, 1-22
189265 . . . . . 1-21, 1-22
189266 . . . . . 1-21, 1-23
189267 . . . . . 1-15, 1-17, 1-21
189276 1-15
189278 1-11
189279 1-11
189280 . . . . . 1-11, 1-15
189281 1-11
189282 1-11
189285 1-29
189292 1-6
189297 1-17
189299 1-29
189301 1-29
189302 1-21
189304 1-21
189305 1-21
189306 1-21
189307 1-21
189308 1-191
189309 1-191
189310 1-191
189311 1-191
189318 . . . . . 1-40, 1-44
189326 1-11
189341 1-205
189354 1-17
189355 1-17
189356 1-17
189357 1-17
189360 1-190
189360FI 1-190
189361 1-191
189364 1-191
189369 1-191

Eastern Wrecker Sales Inc

189384 1-222
189524 1-161
189525 1-161
189600 1-109
189602 1-109
189637 1-109
189639 1-109
189674 1-159
189676 1-159
189699 1-235
19045 . . . . . 1-129, 1-141
190508 1-222
190524 1-222
190536 1-222
190548 1-222
190556 1-235
190557 1-235
190634 1-17
190700ZP 1-40, 1-44
190701 . . . . . 1-40, 1-44
190705ZP 1-40, 1-44
190706 . . . . . 1-40, 1-44
191545 1-171
191552 . . . . . 1-217, 1-218
191554 . . . . . 1-217, 1-218
191555 . . . . . 1-216, 1-217
191556 . . . . . 1-216, 1-218
191557 1-216
191568 . . . . . 1-217, 1-218
191811 1-171
191813 1-178
191814 1-178
191833 1-219
191834 1-180
191835 1-180
191847 1-31
191848 1-31
191849 . . . . . 1-29, 1-31
191850 . . . . . 1-29, 1-31
191872 1-171
192152 1-11
192160 1-223
192208 1-6
193342 1-167
193400 1-31
193401 1-31
193402 1-31
193435 1-205
193442 1-31
193443 1-31
193444 1-31
193445 1-31
193446 1-31
193447 1-31
193448 1-167
193455 1-15
193456 1-171
193904 1-191
193907 1-205
193908 1-205
193909 1-159
193910 . . . . . 1-159, 1-203, 1-223
193911 . . . . . 1-159, 1-203, 1-223
194162 1-246
194164 1-246
194407 . . . . . 1-34, 1-36, 1-37
194467 1-222
194483 1-222
194499 1-222
194508 1-222
194524 1-222
194540 1-222
194556 1-222
194572 1-222
194724 1-223
194725 1-223

Eastern Wrecker Sales Inc

195371 . . . . . 1-203, 1-205
195372 . . . . . 1-203, 1-205
195374 . . . . . 1-203, 1-205
195375 . . . . . 1-203, 1-205
195376 . . . . . 1-203, 1-205
195377 . . . . . 1-203, 1-205
195378 1-203
195379 1-203
195380 1-203
195381 1-203
195383 1-203
195384 1-203
195385 1-205
195386 1-205
195387 1-205
195388 1-205
195395 . . . . . 1-121, 1-123
196165 . . . . . 1-6, 1-171
196167 1-6
196168 1-6
196169 1-6
196171 1-6
196173 1-6
196174 1-6
196175 1-6
196176 1-6
196177 1-6
196784 1-29
197318 1-123
197322 1-121
1974 1-143
197419 1-6
197420 1-6
197587 1-24
197606 . . . . . 1-97, 1-107
197613 . . . . . 1-119, 1-121, 1-123
199104 . . . . . 1-148, 1-153
199105 1-191
20-12 140140 1-199
20125 1-123
201496 1-40
201631 . . . . . 1-22, 1-23
201633 1-24
201642 . . . . . 1-148, 1-153
201643 . . . . . 1-148, 1-153
201644 . . . . . 1-148, 1-153
201645 . . . . . 1-148, 1-153
201650 . . . . . 1-148, 1-153
20-20-20 140424 1-199
202094 . . . . . 1-47, 1-49, 1-53, 1-56, 1-60, 1-65
202099 . . . . . 1-47, 1-49, 1-53, 1-56, 1-60, 1-65
202103 . . . . . 1-47, 1-49, 1-56, 1-60
202104 . . . . . 1-47, 1-49, 1-53, 1-56, 1-60, 1-65
202106 . . . . . 1-47, 1-49, 1-53, 1-56, 1-60
202107 . . . . . 1-56, 1-60, 1-65
202108 . . . . . 1-47, 1-49
202111 . . . . . 1-56, 1-60
202112 . . . . . 1-47, 1-49, 1-56, 1-60, 1-65
202113 . . . . . 1-47, 1-49, 1-56, 1-60, 1-65
202114 . . . . . 1-47, 1-49, 1-53
202116 . . . . . 1-47, 1-49, 1-56, 1-60, 1-65
202117 1-53
202118 . . . . . 1-47, 1-49, 1-56, 1-60
202121 . . . . . 1-47, 1-49, 1-53, 1-56, 1-60, 1-65
202122 . . . . . 1-53, 1-65
202123 . . . . . 1-53, 1-56, 1-60
202191 1-211
202207 . . . . . 1-119, 1-121, 1-123
202225 1-191
202226 1-191
2024-12-12S 1-190, 1-197, 1-199
2024-12-8S 1-197, 1-199
202578 1-6
202702-10-8S . . . 1-29, 1-127, 1-133, 1-138, 1-147, 1-151
202702-12-12S 1-29

Eastern Wrecker Sales Inc

202702-4-6S 1-159, 1-205, 1-223
202702-6-4S 1-161, 1-163
202702-6-8S 1-159, 1-205, 1-223
202702-8-6S 1-159, 1-205, 1-223
202702-8-8S 1-159, 1-205, 1-223
202713-16-16S 1-191
202930 1-113
203102-12-12S 1-26, 1-191
203247 1-35
2033-4-4S 1-163
2033-6-6S 1-223
2033-8-8S 1-17
2040-4-6S 1-111
204075 1-175
204076 1-175
204089 1-175
204094 1-175
204095 1-175
204096 1-175
204108-001 1-93
204124 1-29
204158 . . . . . 1-11, 1-15
204189 1-31
204194 1-211
204223 . . . . . 1-53, 1-56, 1-60, 1-65
204224 . . . . . 1-56, 1-60
204226 1-65
2047-12-12S 1-197, 1-199
2049-6-6S 1-113
205107-001 1-93
205573 . . . . . 1-71, 1-73
205574 . . . . . 1-71, 1-73
205710 1-191
205712 1-191
205742 1-228
205744 1-228
205836 . . . . . 1-119, 1-121, 1-123
205837 . . . . . 1-119, 1-121, 1-123
2062-10-8S 1-127, 1-133, 1-138
2062-12-12S 1-190
2062-16-8S 1-197, 1-199
2062-6-4S 1-161, 1-162, 1-163
2062-6-6S 1-224
2062-6-8S 1-159, 1-205, 1-223
2062-8-6S 1-159, 1-205, 1-223
2062-8-8S 1-17
2071-8-8S 1-29, 1-159, 1-205, 1-223
208106 1-93
2081-8-6S 1-27
2083-8-4S 1-67, 1-69, 1-71, 1-73, 1-119, 1-121
208390 1-31
208391 1-31
208392 1-31
2088-6-6S 1-27, 1-111, 1-113
2089-6-6S 1-109, 1-111, 1-113, 1-115
208980 1-237
209100 . . . . . 1-34, 1-36, 1-37
209101 1-37
209102 1-37
209103 1-37
2-095-010017 1-235
210292-12S 1-26
210377 1-191
212074 . . . . . 1-34, 1-36, 1-73
212216 . . . . . 1-229, 1-230
212378 . . . . . 1-93, 1-97
212379 . . . . . 1-93, 1-97
212381 . . . . . 1-93, 1-97
212383 . . . . . 1-93, 1-97
212386 1-6
212388 1-6
212392 1-247
212396 . . . . . 1-15, 1-17, 1-19, 1-34
212397 1-34
212398 . . . . . 1-15, 1-17
212400 1-119

Eastern Wrecker Sales Inc

212402 1-67
212404 1-67
212407 . . . . . 1-15, 1-17
212412 . . . . . 1-15, 1-17, 1-19
212418 . . . . . 1-103, 1-107
212421 . . . . . 1-103, 1-107
212426 . . . . . 1-103, 1-107
212432 . . . . . 1-6, 1-11
212785 . . . . . 1-53, 1-65
213287 1-35
213288 1-211
213290 1-34
213294 1-35
213295 . . . . . 1-35, 1-171, 1-173
213296 . . . . . 1-34, 1-171, 1-173
213297 . . . . . 1-34, 1-171, 1-173
213298 1-34
213299 . . . . . 1-40, 1-44
213304 1-34
213305 1-35
213333 . . . . . 1-40, 1-44
213496 1-11
213500 1-11
213502 1-11
213978 . . . 1-12, 1-211, 1-247, 1-250, 1-252, 1-253, 1-254, 1-263, 1-264, 1-269
213994 1-11
214102 1-93
214104 . . . . . 1-93, 1-103
214403 1-211
214404 1-211
214405 1-211
214407 1-171
214408 . . . . . 1-171, 1-173
214409 . . . . . 1-171, 1-173
214410 1-171
214411 1-171
214412 1-171
214413 . . . . . 1-40, 1-47, 1-49, 1-53, 1-82
214417 1-53
214418 . . . . . 1-40, 1-47, 1-49
214422 . . . . . 1-40, 1-47, 1-49, 1-53, 1-82
214425 . . . . . 1-40, 1-47, 1-49, 1-53
214426 1-82
214440 1-6
214441 1-157
214442 . . . . . 1-15, 1-17, 1-34
214443 1-34
214444 . . . . . 1-15, 1-17
214468 . . . . . 1-44, 1-56, 1-60, 1-65, 1-71, 1-113
214471 1-113
214477 . . . . . 1-56, 1-60, 1-65, 1-71
214478 1-44
214482 1-44
214639 1-12
214643 1-11
2-150-010240 1-215
215192 1-12
215196 1-11
215198 1-12
215202 1-11
215213 1-113
215486 . . . . . 1-69, 1-111
215487 1-53
215498 . . . . . 1-111, 1-115
215521 1-177
215522 1-177
215745 . . . . . 1-15, 1-17
216200 1-67
216202 1-67
216222 1-73
216223 1-115
216230 1-35
216248 1-35
216259 1-35
216266 1-235

Eastern Wrecker Sales Inc

216267 1-235
216268 1-235
216269 1-240
216270 1-240
216271 1-240
216581 1-130
216599 . . . . . 1-49, 1-60
216600 . . . . . 1-49, 1-53, 1-60, 1-65
216601 1-29
216705 1-123
216920 1-169
216921 1-169
217155 1-6
217167 1-53
218046 1-191
218058 1-130
218068 . . . . . 1-77, 1-79
218070 . . . . . 1-77, 1-79
218075 1-77
218079 1-77
2-181-010001 . 1-12, 1-15, 1-40, 1-44, 1-161, 1-162, 1-163
218106 1-90
218129 1-171
218141 1-24
21925 1-129
220291 1-235
220292 1-235
220293 1-240
220294 1-240
220673 . . . . . 1-90, 1-99
220693 1-90
2215-16-20S 1-190
221602 1-82
2216-12-12S 1-200
221642 1-239
221648 1-239
221649 1-239
221650 1-239
222436 1-239
222437 1-239
222438 1-239
222439 1-239
222440 1-239
222441 1-239
222442 1-239
222443 1-239
222447 1-239
222479 . . . . . 1-53, 1-65
223230 1-84
223231 1-84
223232 1-84
223247 1-40
223252 1-41
223254 1-41
223279 1-237
223282 1-237
223283 1-237
223285 1-237
223938 1-87
223993 1-90
223994 1-90
223995 1-90
223996 1-90
223997 1-90
223998 1-90
223999 1-90
224000 1-90
224001 1-90
224002 . . . . . 1-90, 1-99
224003 . . . . . 1-90, 1-99
224005 1-90
2240-12-12S 1-190
224304 . . . . . 1-53, 1-65
224322 1-87
224325 . . . . . 1-53, 1-65

Eastern Wrecker Sales Inc

225284 1-157
225770 . . . . . 1-53, 1-65
225953 1-77
225954 1-77
225955 . . . . . 1-77, 1-79, 1-84
225956 . . . . . 1-77, 1-79
225958 . . . . . 1-77, 1-79
225959 . . . . . 1-77, 1-79
225962 1-77
225963 . . . . . 1-77, 1-79
225964 1-91
225965 1-90
225969 . . . . . 1-77, 1-79
225970 . . . . . 1-77, 1-79
225977 1-90
225978 1-90
226048 1-79
226049 1-79
2263 1-145
226635 1-237
226644 1-237
226645 1-237
226650 . . . . . 1-229, 1-230
226651 . . . . . 1-229, 1-230
226652 1-229
226653 . . . . . 1-229, 1-230
226655 1-230
226656 1-229
226657 1-229
226660 1-230
226661 1-230
226688 1-237
22752 1-129
228027 1-99
228029 1-99
228069 1-123
228951 1-84
228952 1-84
228953 1-84
228976 1-249
228979 1-249
229177 . . . . . 1-53, 1-65
229178 . . . . . 1-53, 1-65
229181 1-65
229182 . . . . . 1-53, 1-65
229494 1-37
230584 1-249
230585 1-249
230586 1-249
230611 1-77
230612 1-77
230613 1-123
230657 1-90
230730 1-87
230759 1-65
23078 . . . . . 1-130, 1-142
23079 1-130
23081 . . . . . 1-130, 1-142
23083 1-130
23144 1-142
231958 1-90
232809 1-87
232823 1-90
23303 1-129
23367 1-141
23470 1-129
235221 1-99
235222 1-99
236475 1-99
236476 1-99
236497 1-99
236498 1-99
236499 1-99
236500 1-99
236501 1-99
236503 1-100

Eastern Wrecker Sales Inc

236504 . . . . . 1-91, 1-100
236534 1-90
236535 1-90
236536 1-90
236537 . . . . . 1-90, 1-100
236538 1-90
238554 1-99
238555 1-99
238556 1-100
238557 1-100
238558 1-90
238559 1-91
238560 1-91
238562 1-91
238563 1-91
238564 1-91
238565 1-79
238566 1-79
238567 1-79
238568 1-79
238569 1-79
2389 1-143
239294 1-79
2481X 1-191
2481X DRY 1-191
2-557-010054 1-224
2-557-010426 1-246
2-573-010330-04 . . . . . 1-53, 1-65
2-573-010335 . . . . . 1-6, 1-249
26976 1-141
2-720-010002 1-13
3/8P COUPL 1-190
3-014-010255 1-137
3-054-010101 1-169
3067 . . . . . 1-97, 1-107
3-076-010005 . . . . . 1-40, 1-47, 1-49, 1-53
3-076-010015 . . . . . 1-44, 1-56, 1-60, 1-65
3-120-010124 1-190
3-120-010445 . . . . . 1-138, 1-268
3-120-010461 1-197
3-120-010494 1-261
3-125-010465 1-137
3-141-010008 1-169
3-141-010121-1 1-169
3-141-010121-2 1-192
3-141-010155 . . . . . 1-169, 1-177, 1-178
3-150-010186 . . . . . 1-137, 1-143
3-150-010196 1-137
3-155-010017-4 1-127
3-155-010018-6 . . . . . 1-133, 1-137, 1-147, 1-148
3-162-010001 . . . . . 1-190, 1-197
3-174-010038 . . . . . 1-127, 1-133, 1-137, 1-147
3-174-010039036 . . . . . 1-127, 1-133, 1-137, 1-147
3-174-010059 1-151
3-174-010060036 1-151
3-181-010006 . . . . . 1-159, 1-223
3-181-010034-1 . . . . . 1-77, 1-79, 1-82
3-181-010034-2 . . . . . 1-77, 1-79, 1-82
3-182-010028 1-190
3-187-010013 1-44
3-242-010205 . . . . . 1-161, 1-162, 1-163, 1-166
3-272-010010 1-213
3-272-010017 1-182
3-272-010021 1-213
3-316-010008 1-190
3-352-010067-2 . . . . . 1-259, 1-261
3-368-010252 . . . 1-34, 1-147, 1-151, 1-173, 1-177, 1-178, 1-209, 1-219, 1-228
3-384-010020 . . . . . 1-109, 1-111
3-384-010031 . . . . . 1-109, 1-111
3-399-010001 . . . . . 1-197, 1-199
3-443-010018 1-190
346SL 1-154, 1-203
3-481-010006 . . . . . 1-127, 1-130, 1-145
3-481-010007 . . . . . 1-133, 1-137, 1-145
3-482-010249 1-169

Eastern Wrecker Sales Inc

3-482-010472 1-162
3-482-010503 1-197
3-485-010001 . . . . . 1-40, 1-44
3-522-010017 1-137
3-557-010031 1-15
3-557-010033 1-15
3-557-010380 . . . . . 1-169, 1-192
3-557-010469 1-12
3-557-010470-01 1-15
3-557-010470-02 1-15
3-557-010543 . . . . . 1-256, 1-261
3-557-010544 1-261
3-561-010001 . . . . . 1-197, 1-199
3-565-011688 1-137
3-565-011792 . . . . . 1-256, 1-261
3-565-011793 . . . . . 1-256, 1-261
3-573-010031 . . . . . 1-40, 1-44
3-573-010085 1-6
3-573-010189 1-6
3-573-010210 1-6
3-573-010349 1-6
3-573-010377 1-6
3-573-010378 1-169
3-591-010001 . . . . . 1-197, 1-199
3-626-010004 1-138
3-642-010134 . . . . . 1-12, 1-250
3-645-010059 . . . . . 1-12, 1-251
3-645-010084 . . . . . 1-44, 1-56, 1-60, 1-65
3-645-010087 . . . . . 1-256, 1-261
3-645-010088 1-261
3-659-010012 . . . . . 1-97, 1-107
3-711-010025 1-169
3-720-010010 . . . . . 1-127, 1-133
3-720-010035 1-137
3-720-010042 1-137
3-725-010058 1-154
3-755-010080 1-169
3-762-010016 1-40
3-762-010017 . . . . . 1-40, 1-44, 1-264
3-780-010002 . 1-67, 1-69, 1-71, 1-73, 1-109, 1-111, 1-113, 1-115, 1-119, 1-121
3-786-010043 1-197
3-793-010040 . . . . . 1-262, 1-263
3-793-010041 1-262
3-821-010005 1-44
3-831-010172 1-137
3-831-010182 1-137
3-843-010005 1-115
3-843-010034 1-71
3-843-010038 . . . . . 1-27, 1-115
3-843-010039-02 1-138
3-870-010097 1-87
3-870-010104 1-87
3-870-010106 1-87
3-870-010107 1-107
3-870-010110 1-87
3-870-010116 1-87
3-873-010122 . . . . . 1-127, 1-129
3-873-010123 . . . . . 1-133, 1-138, 1-141
3-873-010124 1-127
3-873-010140-01 . . . . . 1-133, 1-263
3-873-010144-01 1-127
40-0667-02 1-190
4009 . . . . . 1-90, 1-97, 1-99, 1-107
403149 1-93
405129 . . . . . 1-93, 1-103
405999-001 . . . . . 1-93, 1-103
408101-001 . . . . . 1-93, 1-103
43029 . . . . . 1-35, 1-173
51031-21 1-159
514-9045-30 1-190
514-9073-30 1-190
516-22PTL 1-239
5410 1-224
55B61 . . . . 1-26, 1-109, 1-111, 1-113, 1-115, 1-138, 1-147, 1-151

Eastern Wrecker Sales Inc

55B61-6 1-26
55B61-7 1-26
56D4 . . . . . 1-109, 1-113, 1-115
61333 1-130
622-3511-008 . . . . . 1-40, 1-44
63680 . . . . . 1-94, 1-97
6-557-010163 . . . . . 1-169, 1-175
6828 . . . . . 1-197, 1-199
71500165 1-205
71500166 1-223
71508981 1-223
71509004 1-205
71509124 1-223
71509125 . . . . . 1-205, 1-223
71600529 1-205
758-181 . . . . . 1-109, 1-113
7779-102 1-205
7779-72 1-223
7779-78 1-205
7779-84 1-205
7HCGHT500 . . . . . 1-127, 1-133, 1-137, 1-147
805-2 . . . . . 1-109, 1-111, 1-113, 1-115
81006 1-129
81009 1-129
81025 1-129
81077 1-141
81078 1-141
81080 1-141
81081 1-141
81264 . . . . 1-34, 1-147, 1-151, 1-171, 1-177, 1-178, 1-180, 1-211, 1-219, 1-247
81530 1-129
88005 1-142
900-08-139 1-82
900 45 040 . . . . . 1-82, 1-85
900 54 007 . . . . . 1-67, 1-74
900-54-079 . . . . . 1-71, 1-73
900598-12S 1-191
905-54-107 . . . . 1-67, 1-69, 1-71, 1-73, 1-74, 1-138, 1-147, 1-151
905-54-186 1-74
905-57-129 1-82
934 00 149 1-82
934-00-367 1-85
934-00-492 . . . . . 1-82, 1-85
936 00 077 1-82

A

A10037.3 1-157
A10038.7 1-157

B

B1821BH050C175N 1-161
B7-141-003 . . . . . 1-169, 1-178

C

C10256 1-157
C2001 1-143
C3069X12 1-197

H

HM212011 . . . . . 1-90, 1-97, 1-99, 1-107
HM212049 . . . . . 1-90, 1-97, 1-99, 1-107
HM218210 . . . . . 1-90, 1-97, 1-99, 1-107
HM218248 . . . . . 1-90, 1-97, 1-99, 1-107

K

K71-101-00 1-93
K71-136-00 1-103
K71-460-00 1-93

Eastern Wrecker Sales Inc

P

PTO *1-197*

R

RTR7999X4ZP *1-137*

W

W214S-1 . . . . . *1-213*
W908406-4 . . . . . *1-85*

Eastern Wrecker Sales Inc

Eastern Wrecker Sales Inc

Document Control Revision Log:

Date	Form #	Improvement(s): Description and Comments
10/2018	F-1003-1018	INITIAL RELEASE
11/2018	F-1003-1118	Release includes new drawing for the Aquatic Suspension and Brakes
11/2019	F-1003-1119	Release includes new Dexter Disc Brake Axles
04/2020	F-1003-0420	ECN 45945 Update, Rotating Step Handle Option
05/2020	F-1003-0520	ECN 45962 Update, Digital Scale Assemblies-226657, 226661
07/2020	F-1003-0520	ECN 46263 Update, G/N Tilt Wedge Assembly-230586
09/2021	F-1003-0921	Updated LSS-25K-3.5 and 5.5 Suspension, 12.25 and 16.5 Disc Brakes.

Eastern Wrecker Sales Inc

Equipment from Landoll Company, LLC. is built to exacting standards ensured by ISO 9001 registration at all Landoll manufacturing facilities.

440B/455B Semitrailer

Parts Manual

Re-Order Part Number F-1003

LANDOLL COMPANY LLC.
1900 North Street
Marysville, Kansas 66508
(785) 562-5381
800-428-5655 ~ WWW.LANDOLL.COM

Copyright 2022. Landoll Company, LLC.
"All rights reserved, including the right to reproduce this material or portions thereof in any form."

Eastern Wrecker Sales Inc